HORN OF AFRICA GATEWAY DEVELOPMENT PROJECT

(HOAGDP)

Consultancy Services for the Design and Works Supervision for the Proposed Extension of Meru Bypass

Contract No: KeNHA/CS/D/4205/2024

FINAL DESIGN

R4-05A: DRAWING BOOK

OCTOBER 2025



Egis Kenya in JV with Egis Ville et Transport
One Padmore Place, 6th floor, George Padmore Road
P.O. Box 76672 - 00508 Nairobi, Kenya

MERU BY-PASS ROADS

DRAWING LIST

DRAWING LIST

LOCATION MAP		
NO.	DRG. NO.	DRAWING TITLE
1	GEN-LM-001	LOCATION MAP (1 OF 2)
2	GEN-LM-001	LOCATION MAP (2 OF 2)
ROAD GEOMETRY DRAWINGS		
MERU-BYPASS ROADS		
1. KEMU-KAMBAKIA ROADS PLANS AND PROFILES		
	1.1. 3 STEERS-KAMBAKIA ROAD	
3	PPF-3S/KAM-001	PLAN AND PROFILE - KM 0+000 TO KM 0+500
4	PPF-3S/KAM-002	PLAN AND PROFILE - KM 0+500 TO KM 1+100
5	PPF-3S/KAM-003	PLAN AND PROFILE - KM 1+100 TO KM 1+700
6	PPF-3S/KAM-004	PLAN AND PROFILE - KM 1+700 TO KM 2+300
7	PPF-3S/KAM-005	PLAN AND PROFILE - KM 2+300 TO KM 2+470
	1.2. KAMBAKIA-KAGOTONE/KEMU C91 ROAD	
8	PPF-KAM/KAG-001	PLAN AND PROFILE - KM 0+000 TO KM 0+500
9	PPF-KAM/KAG-002	PLAN AND PROFILE - KM 0+500 TO KM 1+100
10	PPF-KAM/KAG-003	PLAN AND PROFILE - KM 1+100 TO KM 1+700
11	PPF-KAM/KAG-004	PLAN AND PROFILE - KM 1+700 TO KM 2+300
12	PPF-KAM/KAG-005	PLAN AND PROFILE - KM 2+300 TO KM 2+900
13	PPF-KAM/KAG-006	PLAN AND PROFILE - KM 2+900 TO KM 3+317
	1.3. KAGOTONE-KEMU LINK C91 ROAD	
14	PPF-KAG/KEM-001	PLAN AND PROFILE - KM 0+000 TO KM 0+349
	1.4. KONGOACHEKE JCT - KWA MUKURU JCT	
15	PPF-KOG/KWA-001	PLAN AND PROFILE - KM 0+000 TO KM 0+500
16	PPF-KOG/KWA-002	PLAN AND PROFILE - KM 0+500 TO KM 1+100
17	PPF-KOG/KWA-003	PLAN AND PROFILE - KM 1+100 TO KM 1+700
18	PPF-KOG/KWA-004	PLAN AND PROFILE - KM 1+700 TO KM 2+300
19	PPF-KOG/KWA-005	PLAN AND PROFILE - KM 2+300 TO KM 2+490
	1.5. KONGO GARDENS-KAMBAKIA LINK ROAD	
20	PPF-GAR/KAM-001	PLAN AND PROFILE - KM 0+000 TO KM 0+451
2. RUNOGONE-KAITHE ROAD PLANS AND PROFILES		
21	PPF-RUN/KAI-001	PLAN AND PROFILE - KM 0+000 TO KM 0+500
22	PPF-RUN/KAI-002	PLAN AND PROFILE - KM 0+500 TO KM 1+100
23	PPF-RUN/KAI-003	PLAN AND PROFILE - KM 1+100 TO KM 1+700
24	PPF-RUN/KAI-004	PLAN AND PROFILE - KM 1+700 TO KM 1+760
3. HOSPITAL ROADS PLANS AND PROFILES		
	3.1. HOSPITAL ROAD - KIRAMBURINE JCT	
25	PPF-HOS/KIR-001	PLAN AND PROFILE - KM 0+000 TO KM 0+500
26	PPF-HOS/KIR-002	PLAN AND PROFILE - KM 0+500 TO KM 1+100
27	PPF-HOS/KIR-003	PLAN AND PROFILE - KM 1+100 TO KM 1+700
28	PPF-HOS/KIR-004	PLAN AND PROFILE - KM 1+700 TO KM 1+938
	3.2. LINK 1-MERU BUS TERMINUS	
29	PPF-MBT-001	PLAN AND PROFILE - KM 0+000 TO KM 0+465
	3.3. LINK 2-GAKOROMONE MARKET	
30	PPF-GAKMT-001	PLAN AND PROFILE - KM 0+000 TO KM 0+500
31	PPF-GAKMT-002	PLAN AND PROFILE - KM 0+500 TO KM 0+642
	3.4. LINK 3-MEWAS JCT	
32	PPF-MWS-001	PLAN AND PROFILE - KM 0+000 TO KM 0+341
4. WESTERN BYPASS - MATE ROADS PLANS AND PROFILES		
	4.1. WESTERN BYPASS-LINK ROAD	
33	PPF-WBL-001	PLAN AND PROFILE - KM 0+000 TO KM 0+500
34	PPF-WBL-002	PLAN AND PROFILE - KM 0+500 TO KM 0+706
	4.2. GIKUMENE JCT-MATE ROAD	
35	PPF-GKN/MAT-001	PLAN AND PROFILE - KM 0+000 TO KM 0+600
36	PPF-GKN/MAT-002	PLAN AND PROFILE - KM 0+600 TO KM 1+200
37	PPF-GKN/MAT-003	PLAN AND PROFILE - KM 1+200 TO KM 1+800
38	PPF-GKN/MAT-004	PLAN AND PROFILE - KM 1+800 TO KM 2+400
39	PPF-GKN/MAT-005	PLAN AND PROFILE - KM 2+400 TO KM 2+597
	JUNCTION LAYOUTS	
NO.	DRG. NO.	DRAWING TITLE
	KAMBAKIA ROADS JUNCTIONS	
40	JCT-LAY-001	THREE STEERS JUNCTION
41	JCT-LAY-002	KAMBAKIA JUNCTION
42	JCT-LAY-003	KONGOACHEKE JUNCTION
43	JCT-LAY-004	KWA-MUKURU JUNCTION
44	JCT-LAY-005	KAMBAKIA -A9(B6) JUNCTION
45	JCT-LAY-006	KAGOTONE JUNCTION
46	JCT-LAY-007	KONGO-KAMBAKIA JUNCTION
47	JCT-LAY-008	KONGO JUNCTION
48	JCT-LAY-009	KEMU JUNCTION
	RUNOGONE-KAITHE ROAD JUNCTIONS	
49	JCT-LAY-001	RUNOGONE JUNCTION
50	JCT-LAY-002	KAITHE JUNCTION
	HOSPITAL ROADS JUNCTIONS	
51	JCT-LAY-001	HOSPITAL JUNCTION
52	JCT-LAY-002	KIRAMBURINE JUNCTION
	WESTERN BYPASS ROADS JUNCTIONS	
53	JCT-LAY-001	GIKUMENE JUNCTION
54	JCT-LAY-002	MATE ROAD JUNCTION
55	JCT-LAY-003	WESTERN BYPASS-JUNCTION
56	JCT-LAY-004	LINK JUNCTION

CLIENT:

KENYA NATIONAL HIGHWAY AUTHORITY
Barabara Plaza,
Off Airport South Road,
P. O. Box, 49712 - 00100,
NAIROBI.

KENYA URBAN ROADS AUTHORITY
Barabara Plaza,
Off Airport South Road,
P. O. Box, 49712 - 00100,
NAIROBI.

FINANCIER:

THE WORLD BANK

PROJECT:

HORN OF AFRICA GATEWAY DEVELOPMENT PROJECT (HOAGDP): -

Consultancy Services for the Design and Works Supervision for the Proposed Extension of Meru Bypass.

CONTRACT NO:

KeNHA/RD/CS/D/4205/2024

CONSULTANT:

egis

One Padmore Place 6th Floor,
George Padmore Road,
P. O. Box, 76672 - 00508,
NAIROBI.

DESIGN DETAILS		
Action	Name	Date
Designed By:	C.J	AUG 2025
Drawn By:	C.J	AUG 2025
Checked By:	S.I	AUG 2025
Approved By:	L.R	AUG 2025

DRAWING REVISIONS					
No.	Revision Details	Reviewed	Initials	Date	Approved
		By			
		Checked			
		By			
		Checked			
		By			
		Checked			
		By			
		Checked			
		By			
		Checked			

DRAWING TITLE:

DRAWING LIST

DRAWING SCALE:

AS SHOWN

DRAWING NO:

TYP-DL-001
(1 of 4)

DRAWING LIST

ROAD SIGNS LAYOUT		
MERU-BYPASS ROADS		
1. KEMU-KAMBAKIA ROADS ROAD SIGNS LAYOUTS		
1.1. 3 STEERS-KAMBAKIA ROAD SIGNS LAYOUTS		
No.	**DRAWING NO**	**TITLE**
57	RSL-3S/KAM-001	ROAD SIGNS LAYOUTS - KM 0+000 TO KM 0+200
58	RSL-3S/KAM-002	ROAD SIGNS LAYOUTS - KM 0+200 TO KM 0+500
59	RSL-3S/KAM-003	ROAD SIGNS LAYOUTS - KM 0+500 TO KM 0+800
60	RSL-3S/KAM-004	ROAD SIGNS LAYOUTS - KM 0+800 TO KM 1+100
61	RSL-3S/KAM-005	ROAD SIGNS LAYOUTS - KM 1+100 TO KM 1+400
62	RSL-3S/KAM-006	ROAD SIGNS LAYOUTS - KM 1+400 TO KM 1+700
63	RSL-3S/KAM-007	ROAD SIGNS LAYOUTS - KM 1+700 TO KM 2+000
64	RSL-3S/KAM-008	ROAD SIGNS LAYOUTS - KM 2+000 TO KM 2+300
65	RSL-3S/KAM-009	ROAD SIGNS LAYOUTS - KM 2+300 TO KM 2+474
1.2. KAMBAKIA-KAGOTONE/KEMU LINK C91 ROAD SIGNS LAYOUTS		
66	RSL-KAM/KAG-001	ROAD SIGNS LAYOUTS - KM 0+000 TO KM 0+200
67	RSL-KAM/KAG-002	ROAD SIGNS LAYOUTS - KM 0+200 TO KM 0+500
68	RSL-KAM/KAG-003	ROAD SIGNS LAYOUTS - KM 0+500 TO KM 0+800
69	RSL-KAM/KAG-004	ROAD SIGNS LAYOUTS - KM 0+800 TO KM 1+100
70	RSL-KAM/KAG-005	ROAD SIGNS LAYOUTS - KM 1+100 TO KM 1+400
71	RSL-KAM/KAG-006	ROAD SIGNS LAYOUTS - KM 1+400 TO KM 1+700
72	RSL-KAM/KAG-007	ROAD SIGNS LAYOUTS - KM 1+700 TO KM 2+000
73	RSL-KAM/KAG-008	ROAD SIGNS LAYOUTS - KM 2+000 TO KM 2+300
74	RSL-KAM/KAG-009	ROAD SIGNS LAYOUTS - KM 2+300 TO KM 2+600
75	RSL-KAM/KAG-010	ROAD SIGNS LAYOUTS - KM 2+600 TO KM 2+900
76	RSL-KAM/KAG-011	ROAD SIGNS LAYOUTS - KM 2+900 TO KM 3+200
77	RSL-KAM/KAG-012	ROAD SIGNS LAYOUTS - KM 3+200 TO KM 3+327
1.3 KAGOTONE-KEMU LINK C91 ROAD SIGNS LAYOUTS		
78	RSL-KAG/KEM-001	ROAD SIGNS LAYOUTS - KM 0+000 TO KM 0+200
79	RSL-KAG/KEM-002	ROAD SIGNS LAYOUTS - KM 0+200 TO KM 0+341
1.4 KONGOACHEKE JCT-KWA MUKURU JCT ROAD SIGNS LAYOUTS		
80	RSL-KOG/KWA-001	ROAD SIGNS LAYOUTS - KM 0+000 TO KM 0+200
81	RSL-KOG/KWA-002	ROAD SIGNS LAYOUTS - KM 0+200 TO KM 0+500
82	RSL-KOG/KWA-003	ROAD SIGNS LAYOUTS - KM 0+500 TO KM 0+800
83	RSL-KOG/KWA-004	ROAD SIGNS LAYOUTS - KM 0+800 TO KM 1+100
84	RSL-KOG/KWA-005	ROAD SIGNS LAYOUTS - KM 1+100 TO KM 1+400
85	RSL-KOG/KWA-006	ROAD SIGNS LAYOUTS - KM 1+400 TO KM 1+700
86	RSL-KOG/KWA-007	ROAD SIGNS LAYOUTS - KM 1+700 TO KM 2+000
87	RSL-KOG/KWA-008	ROAD SIGNS LAYOUTS - KM 2+000 TO KM 2+300
88	RSL-KOG/KWA-009	ROAD SIGNS LAYOUTS - KM 2+300 TO KM 2+503
1.5 KONGO GARDENS-KAMBAKIA ROAD SIGNS LAYOUTS		
89	RSL-GAR/KAM-001	ROAD SIGNS LAYOUTS - KM 0+000 TO KM 0+200
90	RSL-GAR/KAM-002	ROAD SIGNS LAYOUTS - KM 0+200 TO KM 0+447
2. RUNOGONE-KAITHE ROAD SIGNS LAYOUTS		
91	RSL-RUN/KAI-001	ROAD SIGNS LAYOUTS - KM 0+000 TO KM 0+200
92	RSL-RUN/KAI-002	ROAD SIGNS LAYOUTS - KM 0+200 TO KM 0+500
93	RSL-RUN/KAI-003	ROAD SIGNS LAYOUTS - KM 0+500 TO KM 0+800
94	RSL-RUN/KAI-004	ROAD SIGNS LAYOUTS - KM 0+800 TO KM 1+100
95	RSL-RUN/KAI-005	ROAD SIGNS LAYOUTS - KM 1+100 TO KM 1+400
96	RSL-RUN/KAI-006	ROAD SIGNS LAYOUTS - KM 1+400 TO KM 1+760
97	RSL-RUN/KAI-007	ROAD SIGNS LAYOUTS - KM 1+700 TO KM 1+757
3. HOSPITAL ROADS SIGNS LAYOUTS		
3.1. HOSPITAL ROAD - KIRAMBURINE JCT ROAD SIGNS LAYOUTS		
98	RSL-HOS/KIR-001	ROAD SIGNS LAYOUTS - KM 0+000 TO KM 0+200
99	RSL-HOS/KIR-002	ROAD SIGNS LAYOUTS - KM 0+200 TO KM 0+500
100	RSL-HOS/KIR-003	ROAD SIGNS LAYOUTS - KM 0+500 TO KM 0+800
101	RSL-HOS/KIR-004	ROAD SIGNS LAYOUTS - KM 0+800 TO KM 1+100
102	RSL-HOS/KIR-005	ROAD SIGNS LAYOUTS - KM 1+100 TO KM 1+400
103	RSL-HOS/KIR-006	ROAD SIGNS LAYOUTS - KM 1+400 TO KM 1+700
104	RSL-HOS/KIR-007	ROAD SIGNS LAYOUTS - KM 1+700 TO KM 1+958
3.2. LINK 1-MERU BUS TERMINUS ROAD SIGNS LAYOUTS		
105	RSL-MBT-001	ROAD SIGNS LAYOUTS - KM 0+000 TO KM 0+200
106	RSL-MBT-002	ROAD SIGNS LAYOUTS - KM 0+200 TO KM 0+464.5
3.3. LINK 2-GAKOROMONE MARKET ROAD SIGNS LAYOUTS		
107	RSL-GAKMT-001	ROAD SIGNS LAYOUTS - KM 0+000 TO KM 0+200
108	RSL-GAKMT-002	ROAD SIGNS LAYOUTS - KM 0+200 TO KM 0+500
109	RSL-GAKMT-003	ROAD SIGNS LAYOUTS - KM 0+500 TO KM 0+645
3.4. LINK 3-MEWAS JCT ROAD SIGNS LAYOUTS		
110	RSL-MWS-001	ROAD SIGNS LAYOUTS - KM 0+000 TO KM 0+200
111	RSL-MWS-002	ROAD SIGNS LAYOUTS - KM 0+200 TO KM 0+341.35
4. WESTERN BYPASS- MATE ROAD SIGNS LAYOUTS		
4.1 WESTERN BYPASS-LINK ROAD SIGNS LAYOUTS		
112	RSL-WBL-001	ROAD SIGNS LAYOUTS - KM 0+000 TO KM 0+200
113	RSL-WBL-002	ROAD SIGNS LAYOUTS - KM 0+200 TO KM 0+500
114	RSL-WBL-003	ROAD SIGNS LAYOUTS - KM 0+500 TO KM 0+709
4.2 GIKUMENE JCT-MATE ROAD SIGNS LAYOUTS		
115	RSL-GKN/MAT-001	ROAD SIGNS LAYOUTS - KM 0+000 TO KM 0+300
116	RSL-GKN/MAT-002	ROAD SIGNS LAYOUTS - KM 0+300 TO KM 0+600
117	RSL-GKN/MAT-003	ROAD SIGNS LAYOUTS - KM 0+600 TO KM 0+900
118	RSL-GKN/MAT-004	ROAD SIGNS LAYOUTS - KM 0+900 TO KM 1+200
119	RSL-GKN/MAT-005	ROAD SIGNS LAYOUTS - KM 1+200 TO KM 1+500
120	RSL-GKN/MAT-006	ROAD SIGNS LAYOUTS - KM 1+500 TO KM 1+800
121	RSL-GKN/MAT-007	ROAD SIGNS LAYOUTS - KM 1+800 TO KM 2+100
122	RSL-GKN/MAT-008	ROAD SIGNS LAYOUTS - KM 2+100 TO KM 2+400
123	RSL-GKN/MAT-009	ROAD SIGNS LAYOUTS - KM 2+400 TO KM 2+597.35

CLIENT:

KENYA NATIONAL HIGHWAY AUTHORITY
Barabara Plaza,
Off Airport South Road,
P. O. Box, 49712 - 00100,
NAIROBI.

KENYA URBAN ROADS AUTHORITY
Barabara Plaza,
Off Airport South Road,
P. O. Box, 49712 - 00100,
NAIROBI.

FINANCIER:

THE WORLD BANK

PROJECT:

HORN OF AFRICA GATEWAY DEVELOPMENT PROJECT (HOAGDP): -

Consultancy Services for the Design and Works Supervision for the Proposed Extension of Meru Bypass.

CONTRACT NO:

KeNHA/RD/CS/D/4205/2024

CONSULTANT:

One Padmore Place 6th Floor,
George Padmore Road,
P. O. Box, 76672 - 00508,
NAIROBI.

DESIGN DETAILS

Action	Name	Date
Designed By:	C.J	AUG 2025
Drawn By:	C.J	AUG 2025
Checked By:	S.I	AUG 2025
Approved By:	L.R	AUG 2025

DRAWING REVISIONS

No.	Revision Details	Reviewed	Initials	Date	Approved
		By			
		Checked			
		By			
		Checked			
		By			
		Checked			
		By			
		Checked			
		By			
		Checked			

DRAWING TITLE:

DRAWING LIST

DRAWING SCALE:

AS SHOWN

DRAWING NO:

TYP-DL-001
(2 of 4)

DRAWING LIST

	TYPICAL DETAILS	
NO.	DRG. NO.	DRAWING TITLE
124	TYP–PAV–001	Typical Cross Section Type 1 (1 of 8)
125	TYP–PAV–001	Typical Cross Section Type 2 And Tyoe 3 (2 of 8)
126	TYP–PAV–001	Typical Cross Section Type 4 (3 of 8)
127	TYP–PAV–001	Typical Cross Section Type 5 (4 of 8)
128	TYP–PAV–001	Typical Cross Section Type 6 (5 of 8)
129	TYP–PAV–001	Typical Cross Section Type 7 And Type 8 (6 of 8)
130	TYP–PAV–001	Typical Cross Section Type 9 And Type 10 (7 of 8)
131	TYP–PAV–001	Typical Cross Section Type 11 And Type 12 (8 of 8)
132	TYP–PAV–002	Typical Road Prism for Cut and Fill Sections
133	TYP–ALG–001	Curve Defination (I of 3)
134	TYP–ALG–001	Curve Defination (2 of 3)
135	TYP–ALG–001	Curve Defination (3 of 3)
136	TYP–ALG–002	Urban Bus Bays
137	TYP–ALG–003	Layout of Road Junctions and Access Types (1 of 2)
138	TYP–ALG–003	Layout of Road Junctions and Access Types (2 of 2)
139	TYP–ALG–004	Kerbs and Channels
140	TYP–ALG–006	Traffic Calming
141	TYP–ALG–007	Standard Road Markings
142	TYP–ALG–008	Guard Rails at Culverts, Embankments and Approaches (1 of 3)
143	TYP–ALG–008	Guard Rails at Bridge Approaches (2 of 3)
144	TYP–ALG–008	Guard Rails – Cut Embarkment & End Treatment, Alignment, Elevation and Fixind Details (3 of 3)
145	TYP–EAW–001	Expansive Materials Excavations ans Replacement
146	TYP–EAW–002	Expansive Materials Excavations ans Replacement
147	TYP–DRA–001	Drainage Structures General Notes
148	TYP–DRA–002	Typical Drain Ditch Cross Sections in Cut Areas
149	TYP–DRA–003	Typical Drain Ditch Cross Sections in Fill Areas
150	TYP–DRA–004	Typical Covered Drain
151	TYP–DRA–007	Access Across Ditch Type A1, MA1 and IBD
152	TYP–DRA–008	Access Across Ditch Type B1, MB1 and MB3
153	TYP–DRA–009	Scour Checks Standards Details
154	TYP–DRA–010	TypicalCascade Details (1 of 2)
155	TYP–DRA–011	TypicalCascade Details (2 of 2)
156	TYP–DRA–012	Pedestrian Crossing Slab
157	TYP–DRA–013	Gabion Protection
158	TYP–DRA–014	Cut – Off & Outfall Drainage and Gabion Walls
159	TYP–DRA–015	Revetment Structure
160	TYP–SIG–001	Replacement Bench Mark & Trigonometrical Beacon
161	TYP–SIG–002	Layout of Road Junctions and Signs at Junctions
162	TYP–SIG–003	Sign Board Support & Mounting Concrete Marker Post Details
163	TYP–SIG–004	Signing Arrangements for Deviations (1 of 4)
164	TYP–SIG–004	Signing Arrangements for Deviations (2 of 4)
165	TYP–SIG–004	Signing Arrangements for Deviations (3 of 4)
166	TYP–SIG–004	Signing Arrangements for Deviations (4 of 4)
167	TYP–STC–001	Stone Masonry Retaining Wall
168	TYP–STC–002	Reinforced Concrete Retaining Wall
169	TYP–STD–001	Service Duct (1 of 2)
170	TYP–STD–001	Service Duct (2 of 2)
171	TYP–FAC–001	Residnt Engineer's Housing Senior Staff House Type I and II
172	TYP–FAC–002	Residnt Engineer's Housing Senior and Junior Staff House Type III, IV and V
173	TYP–FAC–003	Resident Engineer's Housing, Office and Laboratory
174	TYP–FAC–004	Fences

CULVERTS		
NO.	DRG. NO.	DRAWING TITLE
175	TYP–BC–001	Single Cell 3.0 x 2.0 Box Culvert, Layout Plan and Longitudinal Section (1 of 3)
176	TYP–BC–001	Single Cell 3.0 x 2.0 Box Culvert, Sections and Elevations (2 of 3)
177	TYP–BC–001	Single Cell 3.0 x 2.0 Box Culvert, Reinforcement Details (3 of 3)
178	TYP–BC–002	Single Cell 4.0 x 2.0 Box Culvert, Layout Plan and Longitudinal Section (1 of 3)
179	TYP–BC–002	Single Cell 4.0 x 2.0 Box Culvert, Cross Section and Typical Inlet & Outlet Elevation (2 of 3)
180	TYP–BC–002	Single Cell 4.0 x 2.0 Box Culvert, Reinforcement Details (3 of 3)
181	TYP–BC–003	Single Cell 4.0 x 2.5 Box Culvert, Layout Plan and Longitudinal Section (1 of 3)
182	TYP–BC–003	Single Cell 4.0 x 2.5 Box Culvert, Cross Section and Typical Inlet & Outlet Elevation (2 of 3)
183	TYP–BC–003	Single Cell 4.0 x 2.5 Box Culvert, Reinforcement Details (3 of 3)
184	TYP–BC–004	2 Cell 5.0 x 2.5 Box Culvert, Layout Plan and Longitudinal Section (1 of 5)
185	TYP–BC–004	2 Cell 5.0 x 2.5 Box Culvert, Inlet & Outlet Elevation and Sections (2 of 5)
186	TYP–BC–004	2 Cell 5.0 x 2.5 Box Culvert, Culvert Cross Section (3 of 5)
187	TYP–BC–004	2 Cell 5.0 x 2.5 Box Culvert, Reinforcement Details (4 of 5)
188	TYP–BC–004	2 Cell 5.0 x 2.5 Box Culvert, Reinforcement Details (5 of 5)
189	TYP–CSK–001	Standard Culvert Crossing. Skew Details
190	TYP–PC–001	Concrete Pipe Culverts

CLIENT:

Kenya National Highways Authority – Quality Highways, Better Connections

KENYA NATIONAL HIGHWAY AUTHORITY
Barabara Plaza,
Off Airport South Road,
P. O. Box, 49712 - 00100,
NAIROBI.

KENYA URBAN ROADS AUTHORITY
Barabara Plaza,
Off Airport South Road,
P. O. Box, 49712 - 00100,
NAIROBI.

FINANCIER:

THE WORLD BANK

PROJECT:

HORN OF AFRICA GATEWAY DEVELOPMENT PROJECT (HOAGDP): -

Consultancy Services for the Design and Works Supervision for the Proposed Extension of Meru Bypass.

CONTRACT NO:

KeNHA/RD/CS/D/4205/2024

CONSULTANT:

egis

One Padmore Place 6th Floor,
George Padmore Road,
P. O. Box, 76672 - 00508,
NAIROBI.

DESIGN DETAILS

Action	Name	Date
Designed By:	C.J	AUG 2025
Drawn By:	C.J	AUG 2025
Checked By:	S.I	AUG 2025
Approved By:	L.R	AUG 2025

DRAWING REVISIONS

No.	Revision Details	Reviewed	Initials	Date	Approved
		By			
		Checked			
		By			
		Checked			
		By			
		Checked			
		By			
		Checked			
		By			
		Checked			

DRAWING TITLE: DRAWING LIST

DRAWING SCALE: AS SHOWN

DRAWING NO: TYP-DL-001 (3 of 4)

DRAWING LIST

FOOT BRIDGES		
FOOT BRIDGE 1		
NO.	DRG. NO.	DRAWING TITLE
191	TYP-FB1-001	LIST OF DRAWINGS
192	TYP-FB1-002	GENERAL NOTES
193	TYP-FB1-003	GENERAL NOTES
194	TYP-FB1-004	KEY PLAN
195	TYP-FB1-005	FOUNDATION LAYOUT AND SETTING OUT DATA
196	TYP-FB1-006	FOOT BRIDGE LAYOUT PLAN AND LONGITUDINAL ELEVATION
197	TYP-FB1-007	DECK LAYOUT PLANS
198	TYP-FB1-008	BOLTED SPLICE CONNECTIONS
199	TYP-FB1-009	DECK PANEL-1, PANEL-2 AND PANEL-3 DETAILS
200	TYP-FB1-010	DECK CORSS SECTION AND PANEL-4 & PANEL-5 DETAILS
201	TYP-FB1-011	DECK PANELS CONNECTION DETAILS
202	TYP-FB1-012	DECK SLAB DETAILS
203	TYP-FB1-013	DECK ROOF DETAILS
204	TYP-FB1-014	DECK ROOF PANELS DETAILS
205	TYP-FB1-015	PIER HEAD DETAILS
206	TYP-FB1-016	BEARINGS DETAILS
207	TYP-FB1-017	BEARINGS DETAILS
208	TYP-FB1-018	COLUMNS ELEVATIONS
209	TYP-FB1-019	COLUMNS ELEVATIONS
210	TYP-FB1-020	COLUMN-01 AND COLUMN-02 REINFORMENT DETAILS
211	TYP-FB1-021	PIER-1 AND PIER-2 REINFORCEMENT DETAILS
212	TYP-FB1-022	PIER HEAD REINFORCEMENT DETAILS
213	TYP-FB1-023	BEAMS AND RAMP SLAB REINFORCEMENT DETAILS
214	TYP-FB1-024	RAMP ROOF SLAB LAYOUT PLAN AND REINFORCEMENT DETAILS
215	TYP-FB1-025	RAMP ROOF LAYOUT AND DETAILS
216	TYP-FB1-026	STEEL HANDRAILING DETAILS
FOOT BRIDGE 2		
NO.	DRG. NO.	DRAWING TITLE
217	TYP-FB2-001	LIST OF DRAWINGS
218	TYP-FB2-002	GENERAL NOTES
219	TYP-FB2-003	GENERAL NOTES
220	TYP-FB2-004	KEY PLAN
221	TYP-FB2-005	FOUNDATION LAYOUT AND SETTING OUT DATA
222	TYP-FB2-006	FOOT BRIDGE LAYOUT PLAN AND LONGITUDINAL ELEVATION
223	TYP-FB2-007	DECK LAYOUT PLANS
224	TYP-FB2-008	BOLTED SPLICE CONNECTIONS
225	TYP-FB2-009	DECK PANEL-1, PANEL-2 AND PANEL-3 DETAILS
226	TYP-FB2-010	DECK CORSS SECTION AND PANEL-4 & PANEL-5 DETAILS
227	TYP-FB2-011	DECK PANELS CONNECTION DETAILS
228	TYP-FB2-012	DECK SLAB DETAILS
229	TYP-FB2-013	DECK ROOF DETAILS
230	TYP-FB2-014	DECK ROOF PANELS DETAILS
231	TYP-FB2-015	PIER HEAD DETAILS
232	TYP-FB2-016	BEARINGS DETAILS
233	TYP-FB2-017	BEARINGS DETAILS
234	TYP-FB2-018	COLUMNS ELEVATIONS
235	TYP-FB2-019	COLUMNS ELEVATIONS
236	TYP-FB2-020	COLUMN-01 AND COLUMN-02 REINFORMENT DETAILS
237	TYP-FB2-021	PIER-1 AND PIER-2 REINFORCEMENT DETAILS
238	TYP-FB2-022	PIER HEAD REINFORCEMENT DETAILS
239	TYP-FB2-023	BEAMS AND RAMP SLAB REINFORCEMENT DETAILS
240	TYP-FB2-024	RAMP ROOF SLAB LAYOUT PLAN AND REINFORCEMENT DETAILS
241	TYP-FB2-025	RAMP ROOF LAYOUT AND DETAILS
242	TYP-FB2-026	STEEL HANDRAILING DETAILS

	SCHEDULES	
No.	DRAWING NO	TITLE
243	SCH-GDR/GAB	GUARDRAILS AND GABIONS
244	SCH-RM-001	ROAD MARKING
245	SCH-RM-002	ROAD MARKING
246	SCH-RM-003	ROAD MARKING
247	SCH-CUL-001	CULVERTS
248	SCH-RS-001	ROAD SIGNS (1 OF 3)
249	SCH-RS-002	ROAD SIGNS (2 OF 3)
250	SCH-RS-003	ROAD SIGNS (3 OF 3)
251	SCH-BB-001	BUS BAYS

ARTISTIC IMPRESSION OF FOOT BRIDGES		
NO.	DRG. NO.	DRAWING TITLE
252	TYP-1MP-001	ARTISTIC REPRESENTATION OF FOOT BRIDGES (1 OF 6)
253	TYP-1MP-001	ARTISTIC REPRESENTATION OF FOOT BRIDGES (2 OF 6)
254	TYP-1MP-001	ARTISTIC REPRESENTATION OF FOOT BRIDGES (3 OF 6)
255	TYP-1MP-001	ARTISTIC REPRESENTATION OF FOOT BRIDGES (4 OF 6)
256	TYP-1MP-001	ARTISTIC REPRESENTATION OF FOOT BRIDGES (5 OF 6)
257	TYP-1MP-001	ARTISTIC REPRESENTATION OF FOOT BRIDGES (6 OF 6)

CLIENT:

KENYA NATIONAL HIGHWAY AUTHORITY
Barabara Plaza,
Off Airport South Road,
P. O. Box, 49712 - 00100,
NAIROBI.

KENYA URBAN ROADS AUTHORITY
Barabara Plaza,
Off Airport South Road,
P. O. Box, 49712 - 00100,
NAIROBI.

FINANCIER: THE WORLD BANK

PROJECT:
HORN OF AFRICA GATEWAY DEVELOPMENT PROJECT (HOAGDP): -
Consultancy Services for the Design and Works Supervision for the Proposed Extension of Meru Bypass.

CONTRACT NO:
KeNHA/RD/CS/D/4205/2024

CONSULTANT:
One Padmore Place 6th Floor,
George Padmore Road,
P. O. Box, 76672 - 00508,
NAIROBI.

DESIGN DETAILS

Action	Name	Date
Designed By:	C.J	AUG 2025
Drawn By:	C.J	AUG 2025
Checked By:	S.I	AUG 2025
Approved By:	L.R	AUG 2025

DRAWING REVISIONS

No.	Revision Details	Reviewed	Initials	Date	Approved
		By			
		Checked			
		By			
		Checked			
		By			
		Checked			
		By			
		Checked			
		By			
		Checked			

DRAWING TITLE: DRAWING LIST

DRAWING SCALE: AS SHOWN

DRAWING NO: TYP-DL-001 (4 of 4)



KEY		
SECTION 1		
1.1	3 Steers - Kambakia Rd (2.47 Km)	
1.2	Kambakia - Kagotone (C91) Jct Rd (3.317 Km)	
1.3	Kagotone - KeMU (C91) Jct Rd (0.349 Km)	
1.4	Kongoacheke - Kwa Mukuru (C91) Jct Rd (2.49 Km)	
1.5	Kongo Gardens - Kambakia Link Rd (0.451 Km)	
1.6	Meru Polytechnic Footbridge	
SECTION 2		
2.1	Runogone - Kaithe Rd (1.76 Km)	
2.2	Kaaga Boys Footbridge	
SECTION 3		
3.1	Hospital Rd - Kiramburine Jct Rd (1.938 Km)	
3.2	Hospital Rd Link 1 - Meru Bus Terminus (0.465 Km)	
3.3	Hospital Rd Link 2 - Gakoromone Market (0.642 Km)	
3.4	Hospital Rd Link 3 - Mewas Jct (0.341 Km)	
SECTION 4		
4.1	Western Bypass Link Rd (0.706 Km)	
4.2	Gikumene - Mate Rd (2.597 Km)	
	Total	**17.526 Km**
Projection	UTM, Arc 1960, Zone 37N	

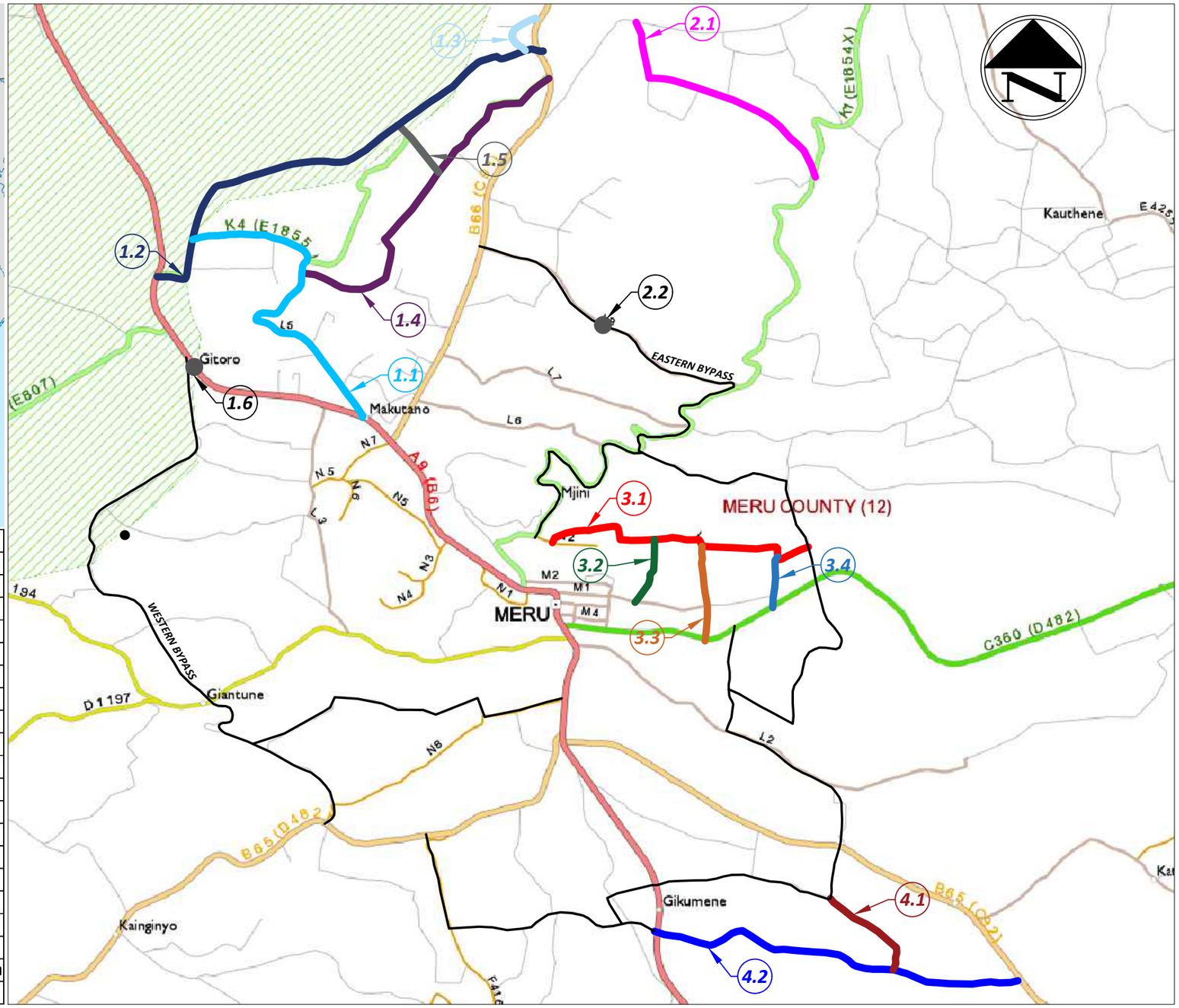

CLIENT:
KENYA NATIONAL HIGHWAY AUTHORITY
Barabara Plaza,
Off Airport South Road,
P. O. Box, 49712 - 00100,
NAIROBI.

KENYA URBAN ROADS AUTHORITY
Barabara Plaza,
Off Airport South Road,
P. O. Box, 49712 - 00100,
NAIROBI.

FINANCIER:
THE WORLD BANK

PROJECT:
HORN OF AFRICA GATEWAY DEVELOPMENT PROJECT (HOAGDP): -

Consultancy Services for the Design and Works Supervision for the Proposed Extension of Meru Bypass.

CONTRACT NO:
KeNHA/RD/CS/D/4205/2024

CONSULTANT:
egis
One Padmore Place 6th Floor,
George Padmore Road,
P. O. Box, 76672 - 00508,
NAIROBI.

DESIGN DETAILS		
Action	Name	Date
Designed By:	LO	AUG 2025
Drawn By:	C.J	AUG 2025
Checked By:	S.A	AUG 2025
Approved By:	L.R	AUG 2025

DRAWING REVISIONS						
No.	Revision Details	Reviewed	Initials	Date	Approved
		By			
		Checked			
		By			
		Checked			
		By			
		Checked			
		By			
		Checked			
		By			
		Checked			

DRAWING TITLE:
PROJECT LOCATION MAP

DRAWING SCALE:
AS SHOWN

DRAWING NO:
SHEET 1

MERU BY-PASS ROADS

1. KEMU-KAMBAKIA ROADS

PLANS AND PROFILES

1.1. 3 STEERS - KAMBAKIA ROAD

PLANS AND PROFILES

LEGEND

- Existing structures/buildings
- Electricity Line
- Telephone Line
- Trees
- GPS Station
- BenCHmark Station
- Storm water drainage
- 0+000 New alignment station
- Gabions
- Barbed wire/CHainlink boundary fence
- Culvert Mark
- Water Course
- Existing Road
- Edge of Walkway
- Edge of shoulder
- Edge of carriageway
- New alignment Center line
- Utility Poles

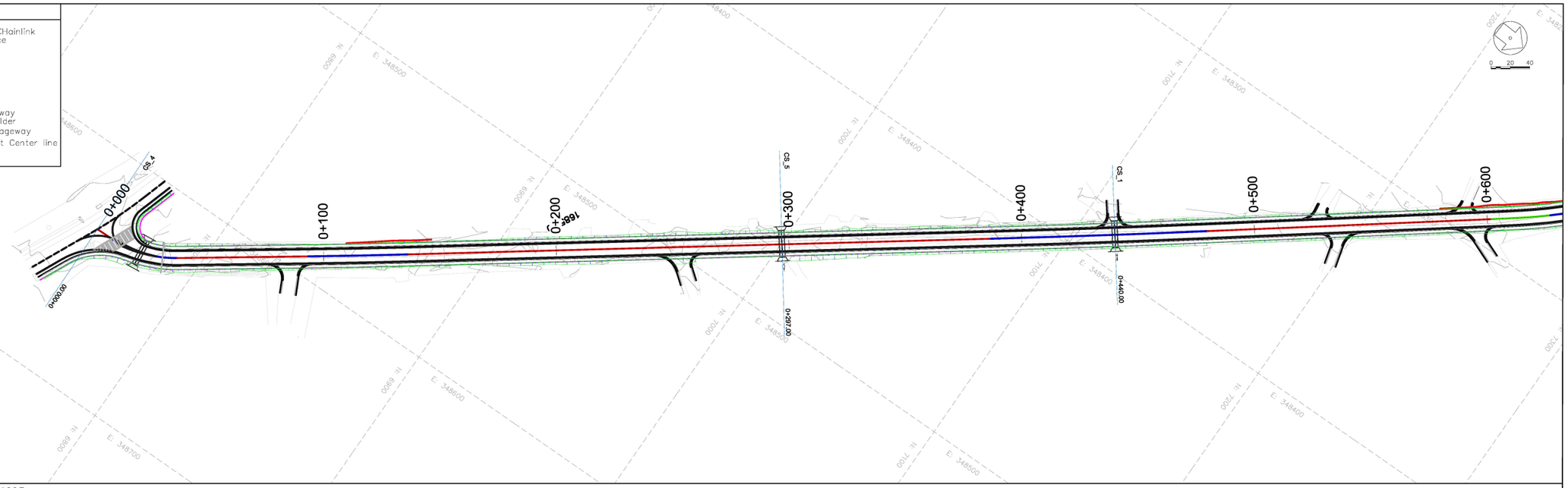

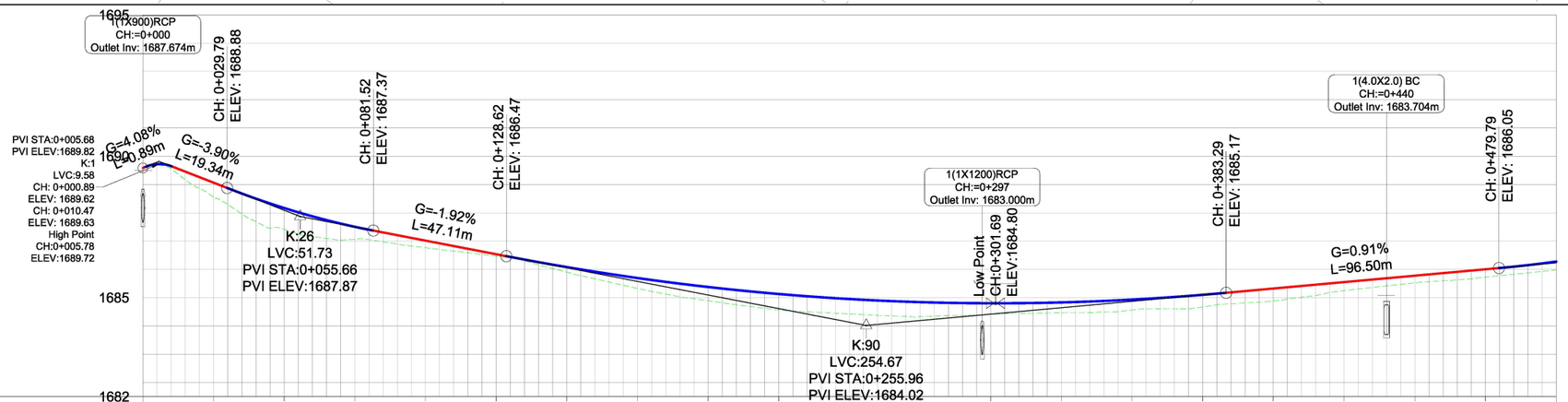

Chainage	0+000	0+025	0+050	0+075	0+100	0+125	0+150	0+175	0+200	0+225	0+250	0+275	0+300	0+325	0+350	0+375	0+400	0+425	0+450	0+475	0+500
Existing Ground Levels (m)	1689.59	1688.55	1687.41	1687.06	1686.77	1686.46	1685.90	1685.33	1684.89	1684.57	1684.42	1684.33	1684.41	1684.47	1684.56	1684.67	1684.88	1685.25	1685.53	1685.73	1685.98
Proposed Road Levels (m)	1689.59	1689.07	1688.17	1687.51	1687.02	1686.54	1686.08	1685.69	1685.38	1685.13	1684.95	1684.84	1684.80	1684.83	1684.93	1685.10	1685.32	1685.55	1685.78	1686.00	1686.28
Level Difference (m)	0.00	-0.52	-0.76	-0.44	-0.25	-0.07	-0.18	-0.37	-0.48	-0.56	-0.53	-0.51	-0.39	-0.37	-0.37	-0.43	-0.44	-0.30	-0.25	-0.28	-0.29
Horizontal Geometry	L =7.09	R: 50 L: 30	L =56.21	R: 3000 L: 43	L =250.29	R: 6000 L: 93	L =122.34														
Vertical Geometry	G =4.1% G =-3.9% K =1 L =9.58 L =19.33	R =2613 K =26 L =51.73	G =-1.9% L =47.10	R =9000 K =90 L =254.67	G =0.9% L =96.50	R =4500 K =45 L =109.41															
Superelevation R	L -2.50%	L -2.50%	L -2.50%	L -2.50%	L -2.50%	L -2.50%	L -2.50%														
Superelevation L	R 2.50%	R 2.50%	R -2.50%	R -2.50%	R 2.50%	R 2.50%	R -2.50%														

CLIENT:

Kenya National Highways Authority
Quality Highways, Better Connections

KENYA NATIONAL HIGHWAY AUTHORITY
Barabara Plaza,
Off Airport South Road,
P. O. Box, 49712 - 00100,
NAIROBI.

KENYA URBAN ROADS AUTHORITY
Barabara Plaza,
Off Airport South Road,
P. O. Box, 49712 - 00100,
NAIROBI.

FINANCIER:

THE WORLD BANK

PROJECT:

HORN OF AFRICA GATEWAY DEVELOPMENT PROJECT (HOAGDP): -

Consultancy Services for the Design and Works Supervision for the Proposed Extension of Meru Bypass.

CONTRACT NO:

KeNHA/RD/CS/D/4205/2024

CONSULTANT:

egis

One Padmore Place 6th Floor,
George Padmore Road,
P. O. Box, 76672 - 00508,
NAIROBI.

DESIGN DETAILS

Action	Name	Date
Designed By:	S.A	October 2025
Drawn By:	J.M	October 2025
Checked By:	L.R	October 2025
Approved By:	S.O	October 2025

DRAWING REVISIONS

No.	Revision Details	Reviewed	Initials	Date	Approved
		By			
		Checked			
		By			
		Checked			
		By			
		Checked			
		By			
		Checked			
		By			
		Checked			

MERU BYPASS-KEMU-KAMBAKIA ROADS

PLAN AND PROFILE

ROAD: 3-STEERS - KAMBAKIA

CH 0+000 - CH 0+500

DRAWING SCALE:

H: 1:1000
V: 1:100

DRAWING NO:

P P F - 3S/KAM - 0 0 1
Doc. Type | Nature of Work | Number

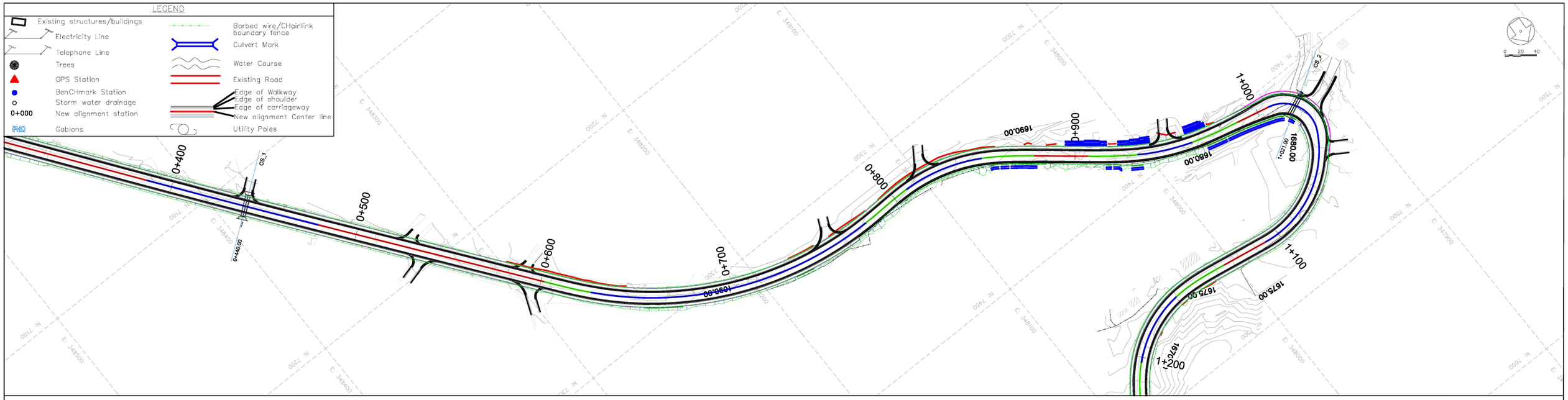

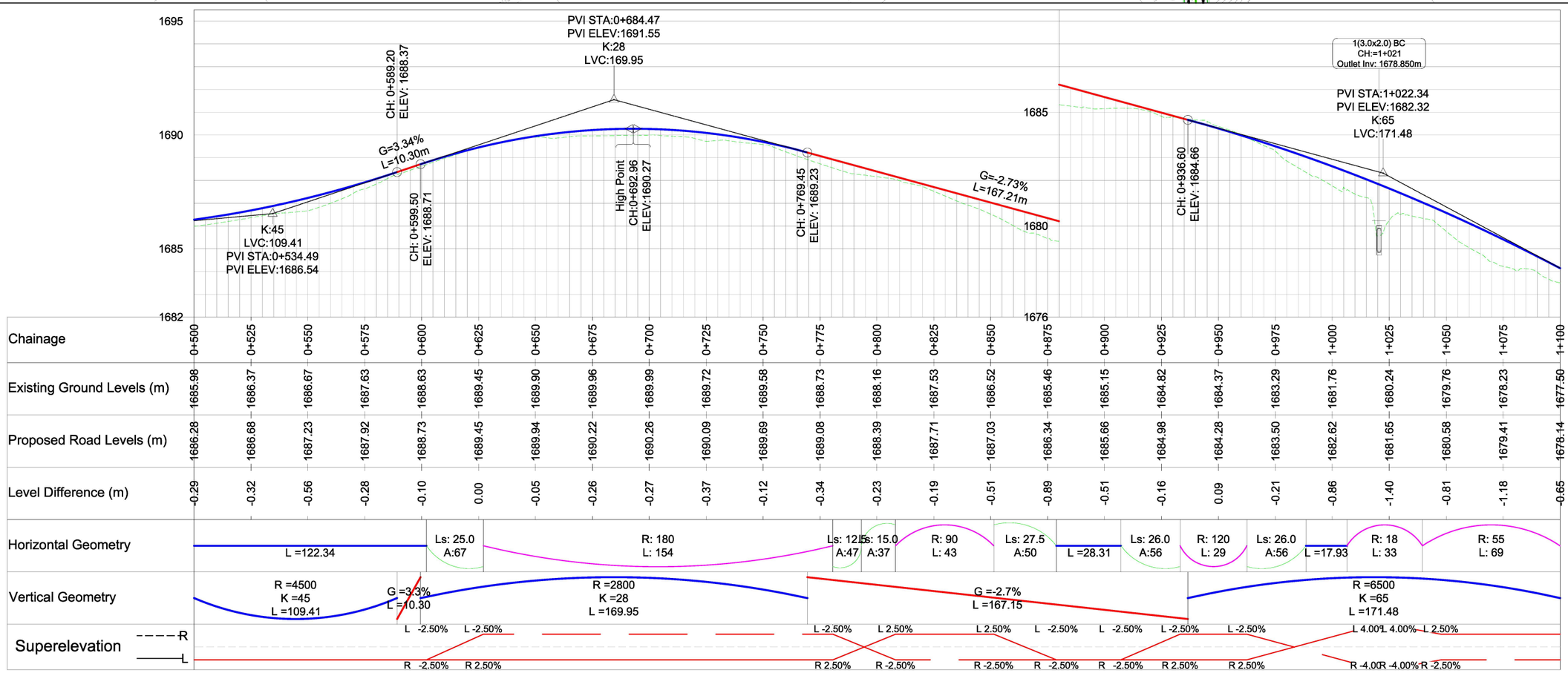

CLIENT:

KENYA NATIONAL HIGHWAY AUTHORITY
Barabara Plaza,
Off Airport South Road,
P. O. Box, 49712 - 00100,
NAIROBI.

KENYA URBAN ROADS AUTHORITY
Barabara Plaza,
Off Airport South Road,
P. O. Box, 49712 - 00100,
NAIROBI.

FINANCIER:

THE WORLD BANK

PROJECT:

HORN OF AFRICA GATEWAY DEVELOPMENT PROJECT (HOAGDP): -

Consultancy Services for the Design and Works Supervision for the Proposed Extension of Meru Bypass.

CONTRACT NO:

KeNHA/RD/CS/D/4205/2024

CONSULTANT:

egis

One Padmore Place 6th Floor,
George Padmore Road,
P. O. Box, 76672 - 00508,
NAIROBI.

DESIGN DETAILS		
Action	Name	Date
Designed By:	S.A	October 2025
Drawn By:	J.M	October 2025
Checked By:	L.R	October 2025
Approved By:	S.O	October 2025

DRAWING REVISIONS					
No.	Revision Details	Reviewed	Initials	Date	Approved
		By			
		Checked			
		By			
		Checked			
		By			
		Checked			
		By			
		Checked			
		By			
		Checked			

MERU BYPASS-KEMU-KAMBAKIA ROADS

PLAN AND PROFILE

ROAD: 3-STEERS - KAMBAKIA

CH 0+500 - CH 1+100

DRAWING SCALE:

H: 1:1000
V: 1:100

DRAWING NO:

P P F - 3S/KAM - 0 0 2
Doc. Type | Nature of Work | Number

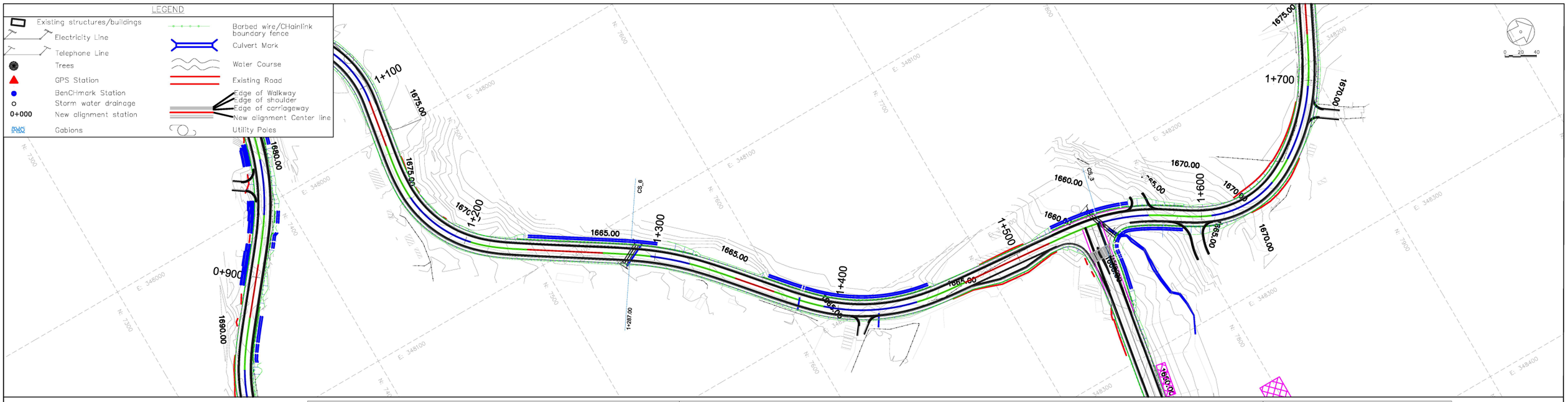

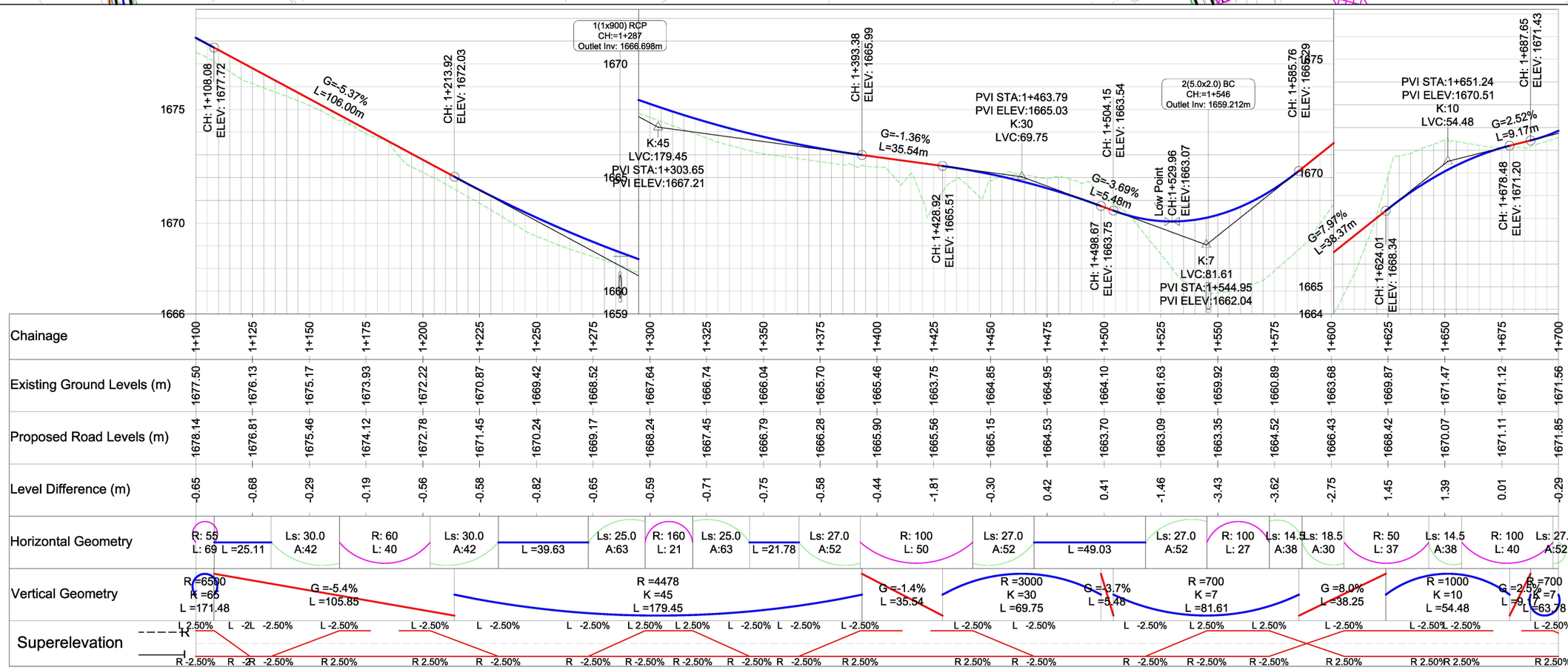

Chainage	1+100	1+125	1+150	1+175	1+200	1+225	1+250	1+275	1+300	1+325	1+350	1+375	1+400	1+425	1+450	1+475	1+500	1+525	1+550	1+575	1+600	1+625	1+650	1+675	1+700
Existing Ground Levels (m)	1677.50	1676.13	1675.17	1673.93	1672.22	1670.87	1669.42	1668.52	1667.64	1666.74	1666.04	1665.70	1665.46	1663.75	1664.85	1664.95	1664.10	1661.63	1659.92	1660.89	1663.68	1669.87	1671.47	1671.12	1671.56
Proposed Road Levels (m)	1678.14	1676.81	1675.46	1674.12	1672.78	1671.45	1670.24	1669.17	1668.24	1667.45	1666.79	1666.28	1665.90	1665.56	1665.15	1664.53	1663.70	1663.09	1663.35	1664.52	1666.43	1668.42	1670.07	1671.11	1671.85
Level Difference (m)	-0.65	-0.68	-0.29	-0.19	-0.56	-0.58	-0.82	-0.65	-0.59	-0.71	-0.75	-0.58	-0.44	-1.81	-0.30	0.42	0.41	-1.46	-3.43	-3.62	-2.75	1.45	1.39	0.01	-0.29
Horizontal Geometry	R: 55 L: 69 L =25.11	Ls: 30.0 A:42	R: 60 L: 40	Ls: 30.0 A:42	L =39.63	Ls: 25.0 A:63	R: 160 L: 21	Ls: 25.0 A:63	L =21.78	Ls: 27.0 A:52	R: 100 L: 50	Ls: 27.0 A:52	L =49.03	Ls: 27.0 A:52	R: 100 L: 27	Ls: 14.5 A:38	Ls: 18.5 A:30	R: 50 L: 37	Ls: 14.5 A:38	R: 100 L: 40	Ls: 27.0 A:52				
Vertical Geometry	R =6500 K =65 L =171.48	G =-5.4% L =105.85	R =4478 K =45 L =179.45	G =-1.4% L =35.54	R =3000 K =30 L =69.75	G =-3.7% L =5.48	R =700 K =7 L =81.61	G =8.0% L =38.25	R =1000 K =10 L =54.48	G =2.5% K =7 L =9.17	R =700 L =63.78														
Superelevation	L 2.50%	L -2.50%	L -2.50%	L -2.50%	L -2.50%	L -2.50%	L -2.50%	L -2.50%	L 2.50%	L 2.50%	L -2.50%	L -2.50%	L -2.50%	L -2.50%	L -2.50%	L -2.50%	L -2.50%	L -2.50%	L 2.50%	L 2.50%	L -2.50%	L -2.50%	L -2.50%	L -2.50%	L -2.50%
	R -2.50%	R -2.50%	R -2.50%	R 2.50%	R 2.50%	R -2.50%	R -2.50%	R -2.50%	R -2.50%	R -2.50%	R -2.50%	R -2.50%	R 2.50%	R 2.50%	R -2.50%	R -2.50%	R -2.50%	R -2.50%	R -2.50%	R -2.50%	R 2.50%	R 2.50%	R 2.50%	R 2.50%	R 2.50%

CLIENT:
KENYA NATIONAL HIGHWAY AUTHORITY
Barabara Plaza,
Off Airport South Road,
P. O. Box, 49712 - 00100,
NAIROBI.

KENYA URBAN ROADS AUTHORITY
Barabara Plaza,
Off Airport South Road,
P. O. Box, 49712 - 00100,
NAIROBI.

FINANCIER:
THE WORLD BANK

PROJECT:
HORN OF AFRICA GATEWAY DEVELOPMENT PROJECT (HOAGDP): -

Consultancy Services for the Design and Works Supervision for the Proposed Extension of Meru Bypass.

CONTRACT NO:
KeNHA/RD/CS/D/4205/2024

CONSULTANT:
egis
One Padmore Place 6th Floor,
George Padmore Road,
P. O. Box, 76672 - 00508,
NAIROBI.

DESIGN DETAILS

Action	Name	Date
Designed By:	S.A	October 2025
Drawn By:	J.M	October 2025
Checked By:	L.R	October 2025
Approved By:	S.O	October 2025

DRAWING REVISIONS

No.	Revision Details	Reviewed	Initials	Date	Approved
		By / Checked			
		By / Checked			
		By / Checked			
		By / Checked			
		By / Checked			

MERU BYPASS-KEMU-KAMBAKIA ROADS
PLAN AND PROFILE
ROAD: 3-STEERS - KAMBAKIA
CH 1+100 - CH 1+700

DRAWING SCALE:
H: 1:1000
V: 1:100

DRAWING NO:
PPF - 3S/KAM - 003
Doc. Type | Nature of Work | Number

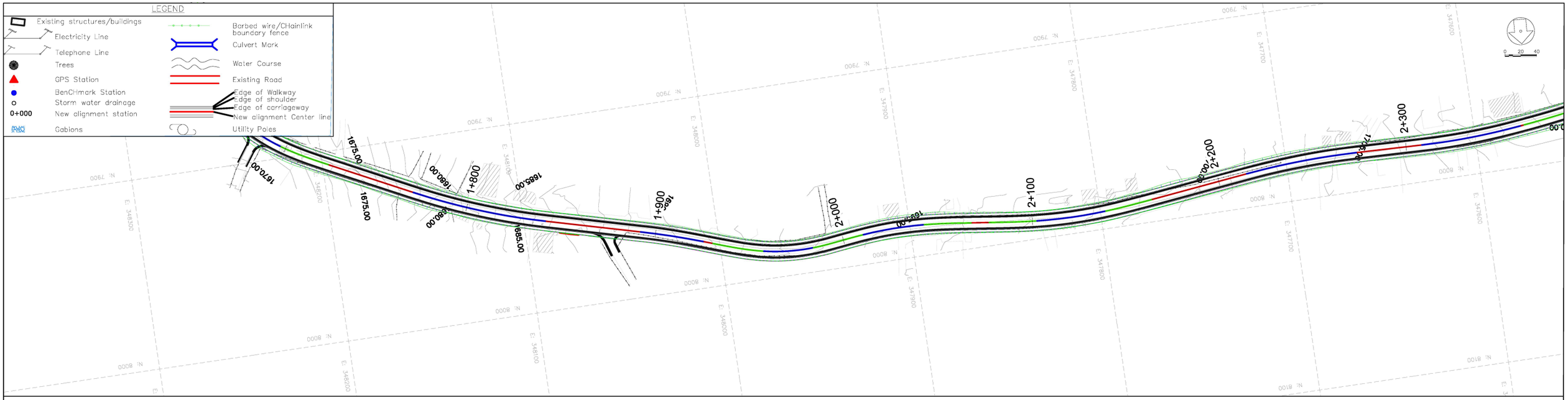

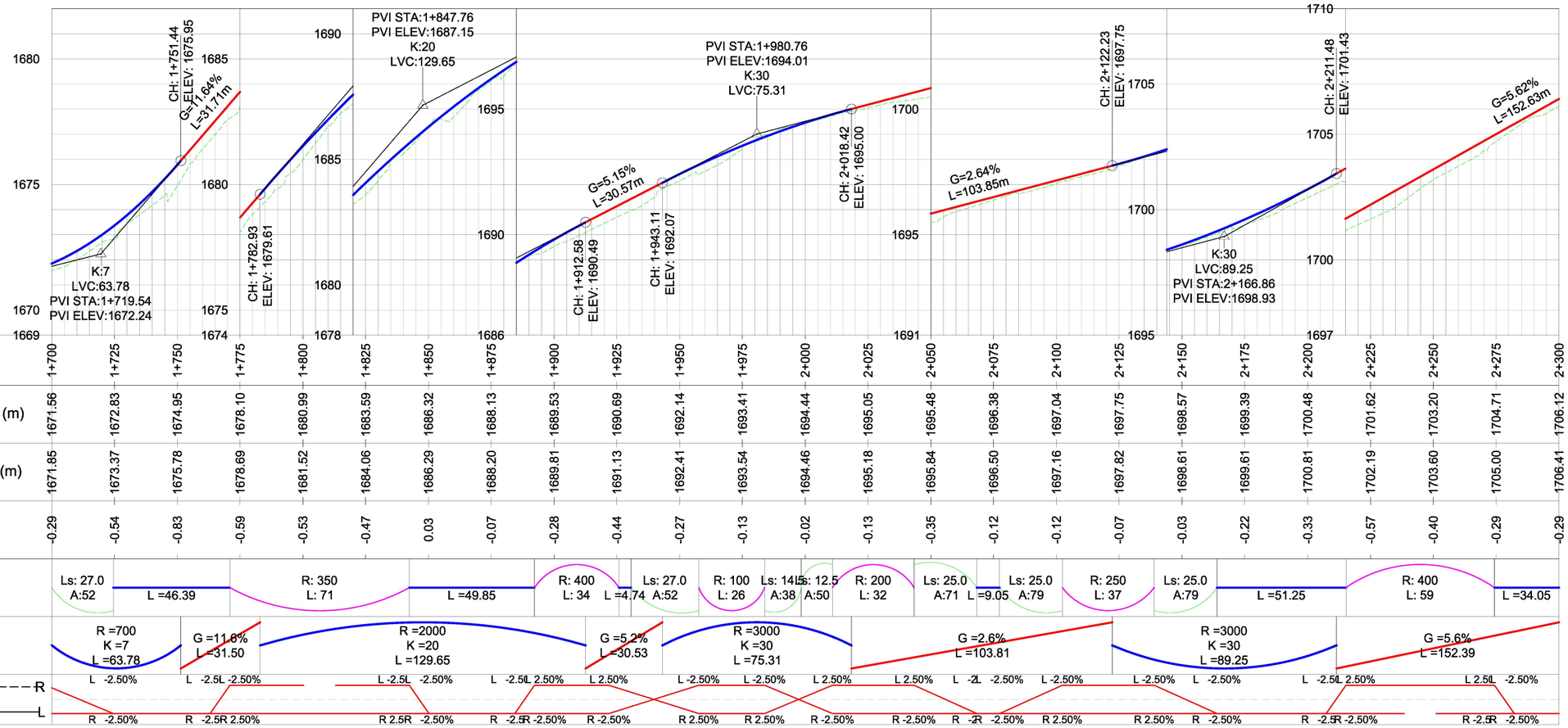

Chainage	1+700	1+725	1+750	1+775	1+800	1+825	1+850	1+875	1+900	1+925	1+950	1+975	2+000	2+025	2+050	2+075	2+100	2+125	2+150	2+175	2+200	2+225	2+250	2+275	2+300
Existing Ground Levels (m)	1671.56	1672.83	1674.95	1678.10	1680.99	1683.59	1686.32	1688.13	1689.53	1690.69	1692.14	1693.41	1694.44	1695.05	1695.48	1696.38	1697.04	1697.75	1698.57	1699.39	1700.48	1701.62	1703.20	1704.71	1706.12
Proposed Road Levels (m)	1671.85	1673.37	1675.78	1678.69	1681.52	1684.06	1686.29	1688.20	1689.81	1691.13	1692.41	1693.54	1694.46	1695.18	1695.84	1696.50	1697.16	1697.82	1698.61	1699.61	1700.81	1702.19	1703.60	1705.00	1706.41
Level Difference (m)	-0.29	-0.54	-0.83	-0.59	-0.53	-0.47	0.03	-0.07	-0.28	-0.44	-0.27	-0.13	-0.02	-0.13	-0.35	-0.12	-0.12	-0.07	-0.03	-0.22	-0.33	-0.57	-0.40	-0.29	-0.29
Horizontal Geometry	Ls: 27.0 A:52	L =46.39	R: 350 L: 71	L =49.85	R: 400 L: 34	L =4.74	Ls: 27.0 A:52	R: 100 L: 26	Ls: 14 A:38	Ls: 12.5 A:50	R: 200 L: 32	Ls: 25.0 A:71	L =9.05	Ls: 25.0 A:79	R: 250 L: 37	Ls: 25.0 A:79	L =51.25	R: 400 L: 59	L =34.05						
Vertical Geometry	R =700 K =7 L =63.78	G =11.6% L =31.50	R =2000 K =20 L =129.65	G =5.2% L =30.53	R =3000 K =30 L =75.31	G =2.6% L =103.81	R =3000 K =30 L =89.25	G =5.6% L =152.39																	
Superelevation R	L -2.5%	L -2.5%	L -2.5%	L -2.5%	L 2.5%	L -2.5%	L -2.5%	L 2.5%	L 2.5%	L -2.5%	L -2.5%	L 2.5%	L 2.5%	L -2.5%	L -2.5%	L -2.5%	L -2.5%	L -2.5%	L -2.5%	L -2.5%	L 2.5%	L -2.5%	L 2.5%	L -2.5%	
Superelevation L	R -2.5%	R -2.5%	R 2.5%	R 2.5%	R -2.5%	R -2.5%	R -2.5%	R -2.5%	R -2.5%	R 2.5%	R 2.5%	R -2.5%	R -2.5%	R 2.5%	R 2.5%	R -2.5%	R -2.5%	R 2.5%	R 2.5%	R -2.5%	R -2.5%	R -2.5%	R -2.5%	R -2.5%	

CLIENT:

KENYA NATIONAL HIGHWAY AUTHORITY
Barabara Plaza,
Off Airport South Road,
P. O. Box, 49712 - 00100,
NAIROBI.

KENYA URBAN ROADS AUTHORITY
Barabara Plaza,
Off Airport South Road,
P. O. Box, 49712 - 00100,
NAIROBI.

FINANCIER:

THE WORLD BANK

PROJECT:

HORN OF AFRICA GATEWAY DEVELOPMENT PROJECT (HOAGDP): -

Consultancy Services for the Design and Works Supervision for the Proposed Extension of Meru Bypass.

CONTRACT NO:

KeNHA/RD/CS/D/4205/2024

CONSULTANT:

egis

One Padmore Place 6th Floor,
George Padmore Road,
P. O. Box, 76672 - 00508,
NAIROBI.

DESIGN DETAILS

Action	Name	Date
Designed By:	S.A	October 2025
Drawn By:	J.M	October 2025
Checked By:	L.R	October 2025
Approved By:	S.O	October 2025

DRAWING REVISIONS

No.	Revision Details	Reviewed	Initials	Date	Approved
		By			
		Checked			
		By			
		Checked			
		By			
		Checked			
		By			
		Checked			
		By			
		Checked			

MERU BYPASS-KEMU-KAMBAKIA ROADS

PLAN AND PROFILE

ROAD: 3-STEERS - KAMBAKIA

CH 1+700 - CH 2+300

DRAWING SCALE:

H: 1:1000
V: 1:100

DRAWING NO:

P P F - 3S/KAM - 0 0 4
Doc. Type | Nature of Work | Number

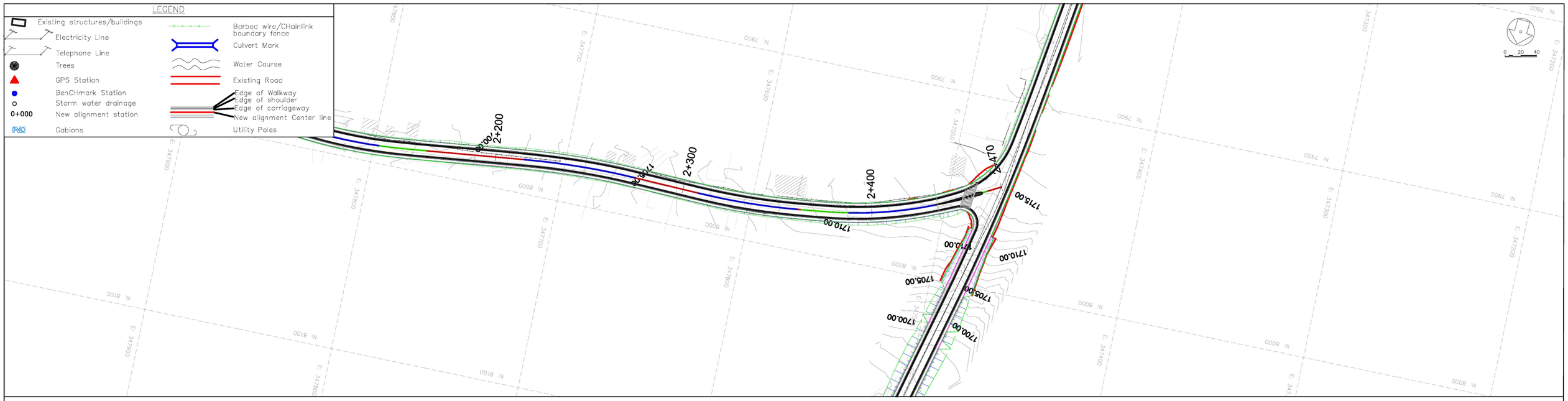

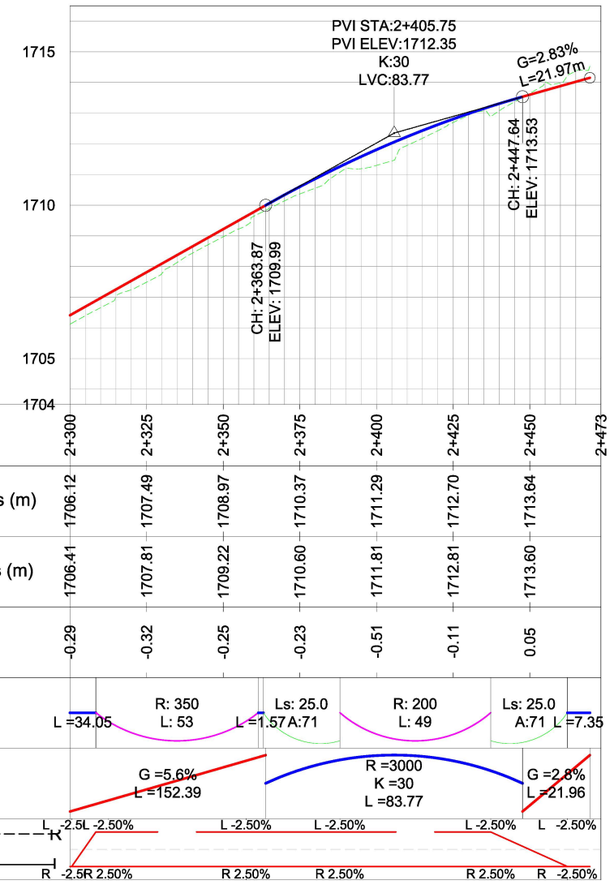

CLIENT:

KENYA NATIONAL HIGHWAY AUTHORITY
Barabara Plaza,
Off Airport South Road,
P. O. Box, 49712 - 00100,
NAIROBI.

KENYA URBAN ROADS AUTHORITY
Barabara Plaza,
Off Airport South Road,
P. O. Box, 49712 - 00100,
NAIROBI.

FINANCIER:

THE WORLD BANK

PROJECT:

HORN OF AFRICA GATEWAY DEVELOPMENT PROJECT (HOAGDP): -

Consultancy Services for the Design and Works Supervision for the Proposed Extension of Meru Bypass.

CONTRACT NO:

KeNHA/RD/CS/D/4205/2024

CONSULTANT:

egis

One Padmore Place 6th Floor,
George Padmore Road,
P. O. Box, 76672 - 00508,
NAIROBI.

DESIGN DETAILS

Action	Name	Date
Designed By:	S.A	October 2025
Drawn By:	J.M	October 2025
Checked By:	L.R	October 2025
Approved By:	S.O	October 2025

DRAWING REVISIONS

No.	Revision Details	Reviewed	Initials	Date	Approved
		By			
		Checked			
		By			
		Checked			
		By			
		Checked			
		By			
		Checked			
		By			
		Checked			

MERU BYPASS-KEMU-KAMBAKIA ROADS

PLAN AND PROFILE

ROAD: 3-STEERS - KAMBAKIA

CH 2+300 - CH 2+470

DRAWING SCALE:

H: 1:1000
V: 1:100

DRAWING NO:

PPF - 3S/KAM - 005
Doc. Type | Nature of Work | Number

1.2 KAMBAKIA-KAGOTONE KEMU C91 ROAD

PLANS AND PROFILES

LEGEND

- Existing structures/buildings
- Electricity Line
- Telephone Line
- Trees
- GPS Station
- BenCHmark Station
- Storm water drainage
- 0+000 New alignment station
- Gabions
- Barbed wire/CHainlink boundary fence
- Culvert Mark
- Water Course
- Existing Road
- Edge of Walkway
- Edge of shoulder
- Edge of carriageway
- New alignment Center line
- Utility Poles

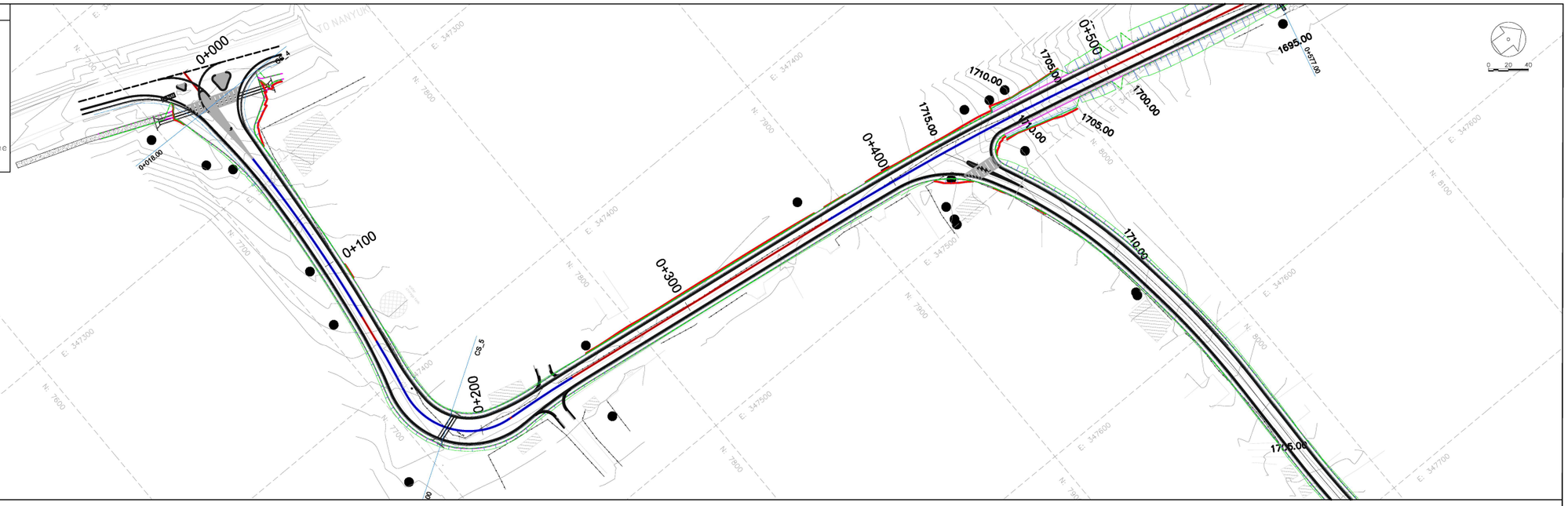

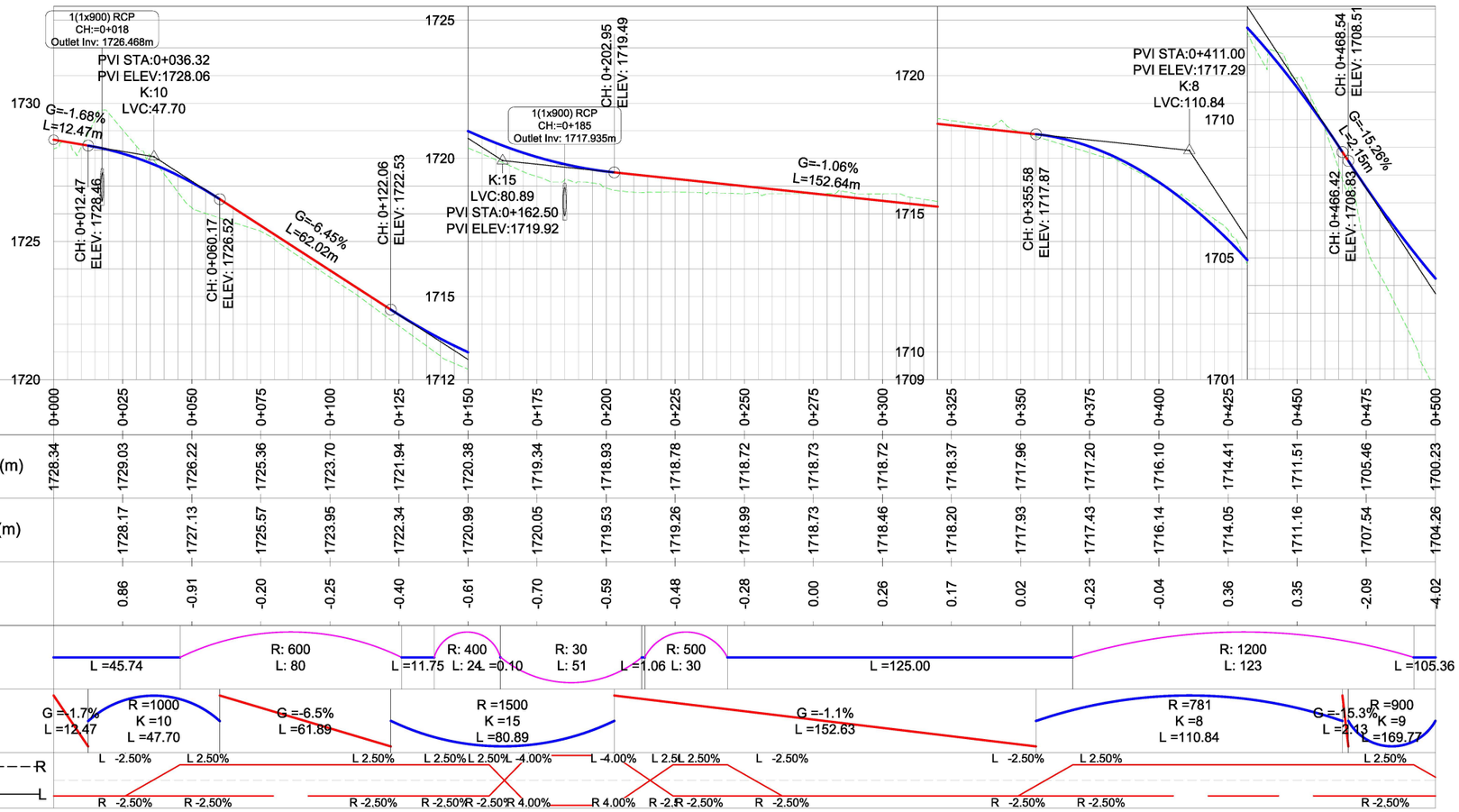

Chainage	Existing Ground Levels (m)	Proposed Road Levels (m)	Level Difference (m)
0+000	1728.34		
0+025	1729.03	1728.17	0.86
0+050	1726.22	1727.13	-0.91
0+075	1725.36	1725.57	-0.20
0+100	1723.70	1723.95	-0.25
0+125	1721.94	1722.34	-0.40
0+150	1720.38	1720.99	-0.61
0+175	1719.34	1720.05	-0.70
0+200	1718.93	1719.53	-0.59
0+225	1718.78	1719.26	-0.48
0+250	1718.72	1718.99	-0.28
0+275	1718.73	1718.73	0.00
0+300	1718.72	1718.46	0.26
0+325	1718.37	1718.20	0.17
0+350	1717.96	1717.93	0.02
0+375	1717.20	1717.43	-0.23
0+400	1716.10	1716.14	-0.04
0+425	1714.41	1714.05	0.36
0+450	1711.51	1711.16	0.35
0+475	1705.46	1707.54	-2.09
0+500	1700.23	1704.26	-4.02

CLIENT:

KENYA NATIONAL HIGHWAY AUTHORITY
Barabara Plaza,
Off Airport South Road,
P. O. Box, 49712 - 00100,
NAIROBI.

KENYA URBAN ROADS AUTHORITY
Barabara Plaza,
Off Airport South Road,
P. O. Box, 49712 - 00100,
NAIROBI.

FINANCIER:

THE WORLD BANK

PROJECT:

HORN OF AFRICA GATEWAY DEVELOPMENT PROJECT (HOAGDP): -

Consultancy Services for the Design and Works Supervision for the Proposed Extension of Meru Bypass.

CONTRACT NO:

KeNHA/RD/CS/D/4205/2024

CONSULTANT:

egis

One Padmore Place 6th Floor,
George Padmore Road,
P. O. Box, 76672 - 00508,
NAIROBI.

DESIGN DETAILS

Action	Name	Date
Designed By:	S.A	October 2025
Drawn By:	J.M	October 2025
Checked By:	L.R	October 2025
Approved By:	S.O	October 2025

DRAWING REVISIONS

No.	Revision Details	Reviewed	Initials	Date	Approved
		By / Checked			

MERU BYPASS-KEMU-KAMBAKIA ROADS

PLAN AND PROFILE

ROAD: KAMBAKIA-KAGOTONE/KEMU C91 ROAD

CH 0+000 - CH 0+500

DRAWING SCALE:

H: 1:1000
V: 1:100

DRAWING NO:

PPF - KAM/KAG - 001

Doc. Type | Nature of Work | Number

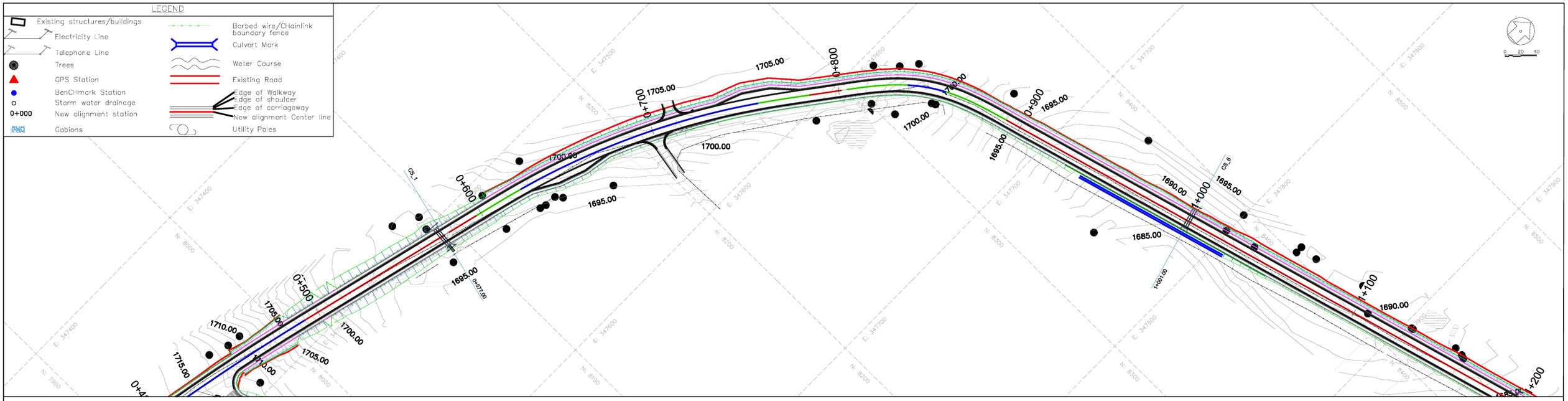

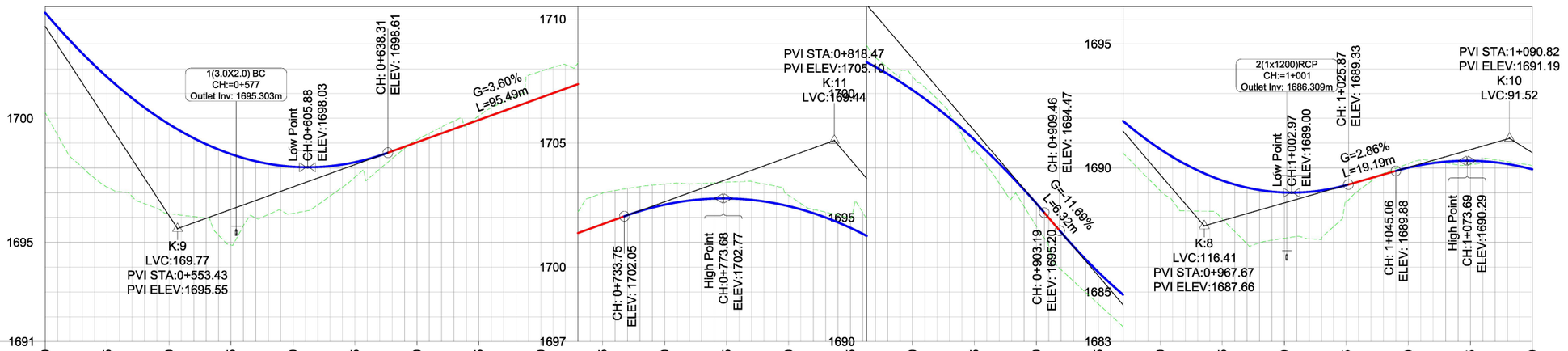

Chainage	0+500	0+525	0+550	0+575	0+600	0+625	0+650	0+675	0+700	0+725	0+750	0+775	0+800	0+825	0+850	0+875	0+900	0+925	0+950	0+975	1+000	1+025	1+050	1+075	1+100
Existing Ground Levels (m)	1700.23	1697.23	1696.16	1694.89	1696.17	1697.63	1699.13	1700.10	1701.90	1702.98	1703.35	1703.43	1702.90	1701.97	1700.69	1697.72	1694.64	1691.52	1689.08	1687.94	1687.16	1688.62	1690.17	1690.14	1690.10
Proposed Road Levels (m)	1704.26	1701.66	1699.76	1698.56	1698.05	1698.23	1699.03	1699.93	1700.83	1701.74	1702.52	1702.77	1702.46	1701.58	1700.14	1698.14	1695.57	1692.80	1690.76	1689.49	1689.01	1689.31	1690.01	1690.29	1689.94
Level Difference (m)	4.02	4.44	3.61	3.67	1.88	0.61	0.10	0.17	1.06	1.25	0.83	0.66	0.44	0.38	0.55	0.42	0.92	1.28	1.67	1.55	1.85	0.69	0.17	0.15	0.16
Horizontal Geometry	L =105.36		Ls: 27.0 A:104		R: 400 L: 133							Ls: 27.0 A:104	L =17.04	Ls: 35.0 A:55	R: 85 L: 20	Ls: 35.0 A:55	L =358.39								
Vertical Geometry	R =900 K =9 L =169.77				G =3.6% L =95.43							R =1108 K =11 L =169.44				G =-11.7% L =6.27	R =800 K =8 L =116.41				G =2.9% L =19.19	R =1000 K =10 L =91.52			
Superelevation	L -2.50%		L -2.50%		L 2.50%							L 2.50%	L -2.50%	L -2.50%	L 4.00%	L 4.00%	L -2.50%								
	R -2.50%		R -2.50%		R -2.50%							R -2.50%	R -2.50%	R -2.50%	R -4.00%	R -4.00%	R -2.50%								

CLIENT:

KENYA NATIONAL HIGHWAY AUTHORITY
Barabara Plaza,
Off Airport South Road,
P. O. Box, 49712 - 00100,
NAIROBI.

KENYA URBAN ROADS AUTHORITY
Barabara Plaza,
Off Airport South Road,
P. O. Box, 49712 - 00100,
NAIROBI.

FINANCIER:

THE WORLD BANK

PROJECT:

HORN OF AFRICA GATEWAY DEVELOPMENT PROJECT (HOAGDP): -

Consultancy Services for the Design and Works Supervision for the Proposed Extension of Meru Bypass.

CONTRACT NO:

KeNHA/RD/CS/D/4205/2024

CONSULTANT:

egis

One Padmore Place 6th Floor,
George Padmore Road,
P. O. Box, 76672 - 00508,
NAIROBI.

DESIGN DETAILS

Action	Name	Date
Designed By:	S.A	October 2025
Drawn By:	J.M	October 2025
Checked By:	L.R	October 2025
Approved By:	S.O	October 2025

DRAWING REVISIONS

No.	Revision Details	Reviewed	Initials	Date	Approved
		By			
		Checked			
		By			
		Checked			
		By			
		Checked			
		By			
		Checked			
		By			
		Checked			

MERU BYPASS-KEMU-KAMBAKIA ROADS

PLAN AND PROFILE

ROAD: KAMBAKIA-KAGOTONE/KEMU C91 ROAD

CH 0+500 - CH 1+100

DRAWING SCALE:

H: 1:1000
V: 1:100

DRAWING NO:

P P F - KAM/KAG - 0 0 2

Doc. Type | Nature of Work | Number

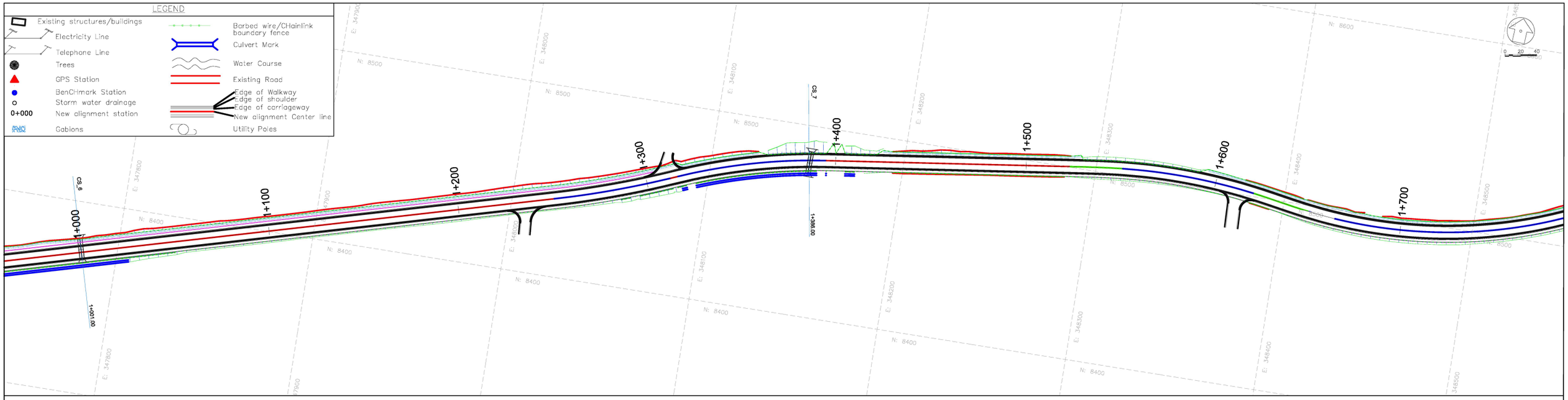

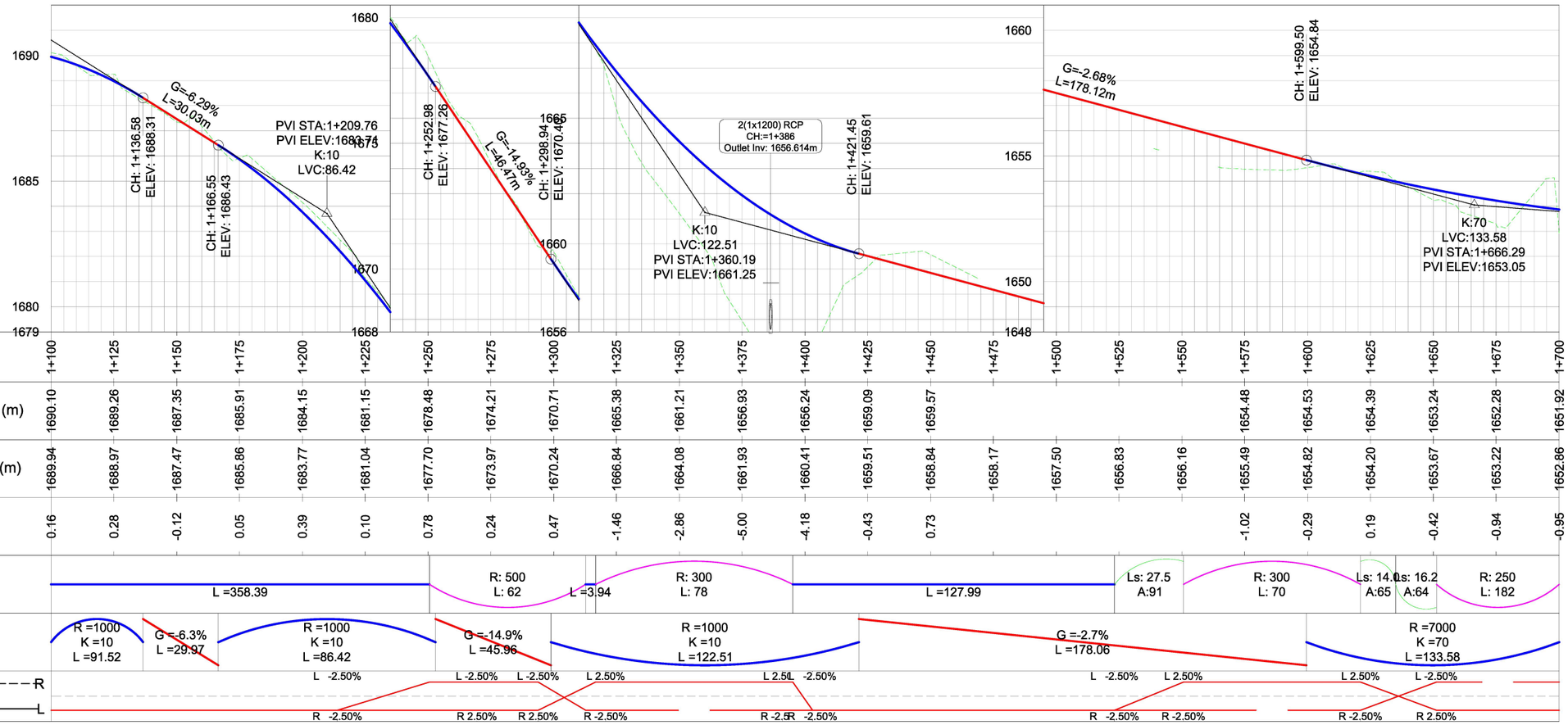

Chainage	1+100	1+125	1+150	1+175	1+200	1+225	1+250	1+275	1+300	1+325	1+350	1+375	1+400	1+425	1+450	1+475	1+500	1+525	1+550	1+575	1+600	1+625	1+650	1+675	1+700
Existing Ground Levels (m)	1690.10	1689.26	1687.35	1685.91	1684.15	1681.15	1678.48	1674.21	1670.71	1665.38	1661.21	1656.93	1656.24	1659.09	1659.57					1654.48	1654.53	1654.39	1653.24	1652.28	1651.92
Proposed Road Levels (m)	1689.94	1688.97	1687.47	1685.86	1683.77	1681.04	1677.70	1673.97	1670.24	1666.84	1664.08	1661.93	1660.41	1659.51	1658.84	1658.17	1657.50	1656.83	1656.16	1655.49	1654.82	1654.20	1653.67	1653.22	1652.86
Level Difference (m)	0.16	0.28	-0.12	0.05	0.39	0.10	0.78	0.24	0.47	-1.46	-2.86	-5.00	-4.18	-0.43	0.73					-1.02	-0.29	0.19	-0.42	-0.94	-0.95

CLIENT:	KENYA NATIONAL HIGHWAY AUTHORITY Barabara Plaza, Off Airport South Road, P. O. Box, 49712 - 00100, NAIROBI.
	KENYA URBAN ROADS AUTHORITY Barabara Plaza, Off Airport South Road, P. O. Box, 49712 - 00100, NAIROBI.
FINANCIER:	THE WORLD BANK
PROJECT:	HORN OF AFRICA GATEWAY DEVELOPMENT PROJECT (HOAGDP): - Consultancy Services for the Design and Works Supervision for the Proposed Extension of Meru Bypass.
CONTRACT NO:	KeNHA/RD/CS/D/4205/2024
CONSULTANT:	egis One Padmore Place 6th Floor, George Padmore Road, P. O. Box, 76672 - 00508, NAIROBI.

DESIGN DETAILS

Action	Name	Date
Designed By:	S.A	October 2025
Drawn By:	J.M	October 2025
Checked By:	L.R	October 2025
Approved By:	S.O	October 2025

DRAWING REVISIONS

No.	Revision Details	Reviewed	Initials	Date	Approved
		By			
		Checked			
		By			
		Checked			
		By			
		Checked			
		By			
		Checked			
		By			
		Checked			

MERU BYPASS-KEMU-KAMBAKIA ROADS

PLAN AND PROFILE

ROAD: KAMBAKIA-KAGOTONE/KEMU C91 ROAD

CH 1+100 - CH 1+700

DRAWING SCALE:
H: 1:1000
V: 1:100

DRAWING NO:
P P F - KAM/KAG - 0 0 3
Doc. Type | Nature of Work | Number

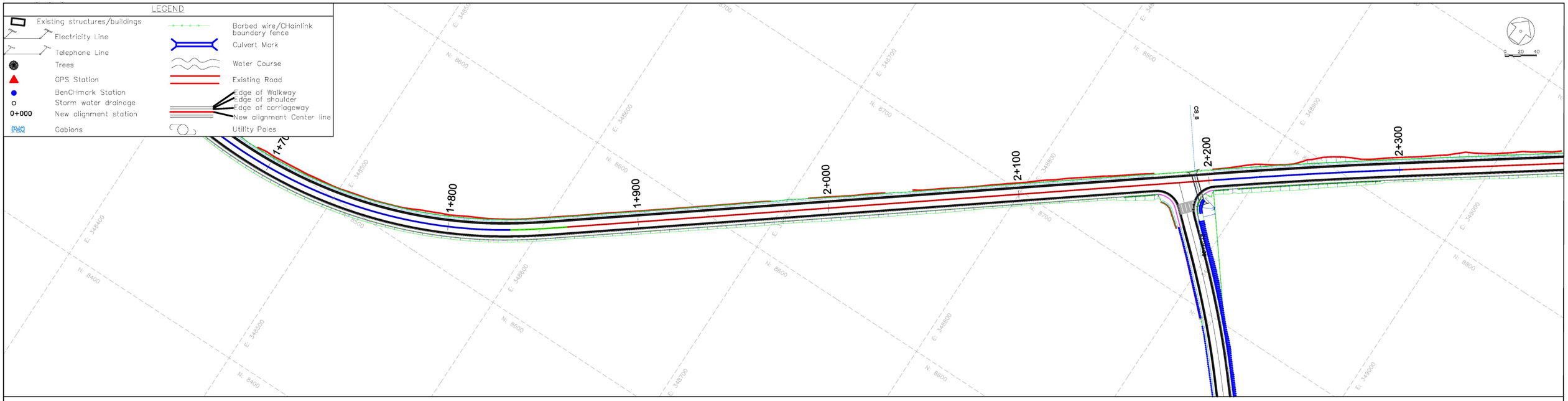

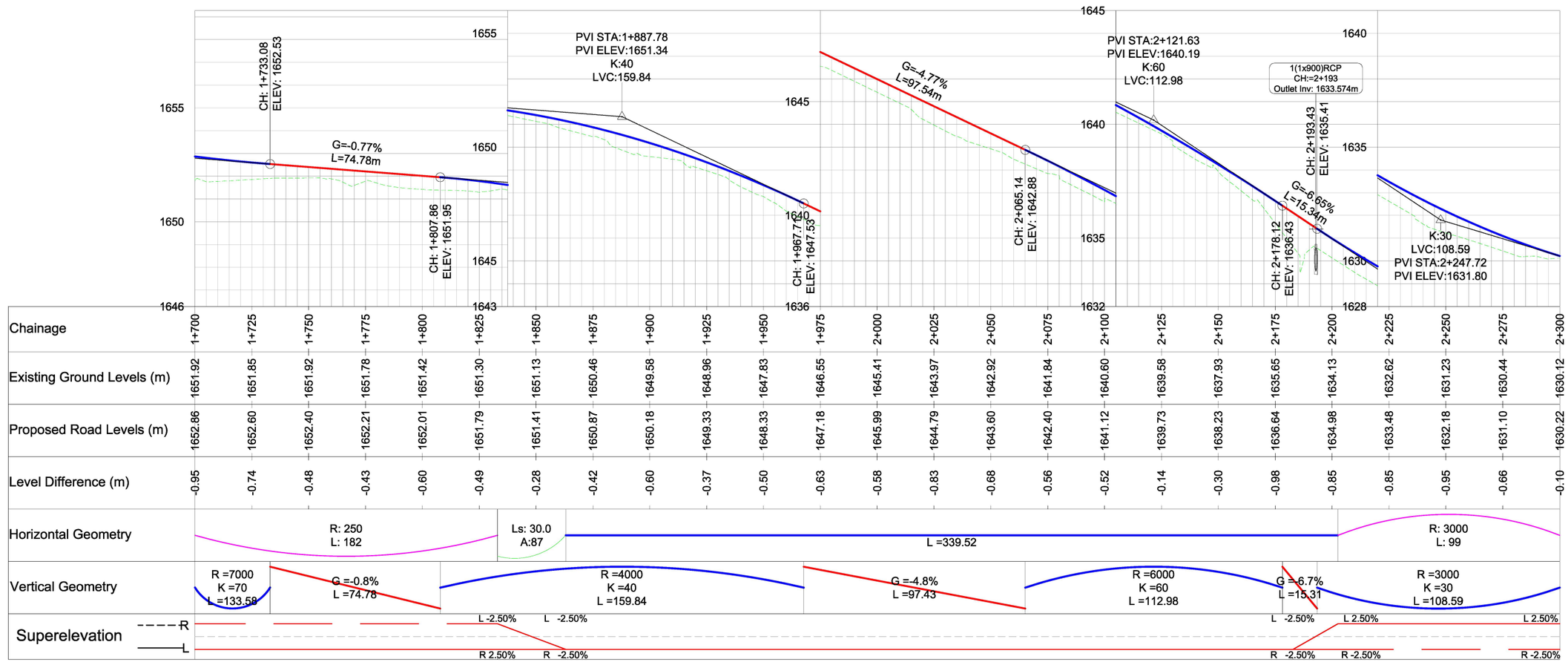

Chainage	1+700	1+725	1+750	1+775	1+800	1+825	1+850	1+875	1+900	1+925	1+950	1+975	2+000	2+025	2+050	2+075	2+100	2+125	2+150	2+175	2+200	2+225	2+250	2+275	2+300
Existing Ground Levels (m)	1651.92	1651.85	1651.92	1651.78	1651.42	1651.30	1651.13	1650.46	1649.58	1648.96	1647.83	1646.55	1645.41	1643.97	1642.92	1641.84	1640.60	1639.58	1637.93	1635.65	1634.13	1632.62	1631.23	1630.44	1630.12
Proposed Road Levels (m)	1652.86	1652.60	1652.40	1652.21	1652.01	1651.79	1651.41	1650.87	1650.18	1649.33	1648.33	1647.18	1645.99	1644.79	1643.60	1642.40	1641.12	1639.73	1638.23	1636.64	1634.98	1633.48	1632.18	1631.10	1630.22
Level Difference (m)	-0.95	-0.74	-0.48	-0.43	-0.60	-0.49	-0.28	-0.42	-0.60	-0.37	-0.50	-0.63	-0.58	-0.83	-0.68	-0.56	-0.52	-0.14	-0.30	-0.98	-0.85	-0.85	-0.95	-0.66	-0.10
Horizontal Geometry		R: 250 L: 182					Ls: 30.0 A:87					L =339.52										R: 3000 L: 99			
Vertical Geometry	R =7000 K =70 L =133.58		G =-0.8% L =74.78				R =4000 K =40 L =159.84					G =-4.8% L =97.43				R =6000 K =60 L =112.98				G =-6.7% L =15.31		R =3000 K =30 L =108.59			
Superelevation	R L					L -2.50% R 2.50%	L -2.50% R -2.50%													L -2.50% R -2.50%	L 2.50% R -2.50%		L 2.50% R -2.50%		

CLIENT:

Kenya National Highways Authority
Quality Highways, Better Connections

KENYA NATIONAL HIGHWAY AUTHORITY
Barabara Plaza,
Off Airport South Road,
P. O. Box, 49712 - 00100,
NAIROBI.

KENYA URBAN ROADS AUTHORITY
Barabara Plaza,
Off Airport South Road,
P. O. Box, 49712 - 00100,
NAIROBI.

FINANCIER:

THE WORLD BANK

PROJECT:

HORN OF AFRICA GATEWAY DEVELOPMENT PROJECT (HOAGDP): -

Consultancy Services for the Design and Works Supervision for the Proposed Extension of Meru Bypass.

CONTRACT NO:

KeNHA/RD/CS/D/4205/2024

CONSULTANT:

egis

One Padmore Place 6th Floor,
George Padmore Road,
P. O. Box, 76672 - 00508,
NAIROBI.

DESIGN DETAILS

Action	Name	Date
Designed By:	S.A	October 2025
Drawn By:	J.M	October 2025
Checked By:	L.R	October 2025
Approved By:	S.O	October 2025

DRAWING REVISIONS

No.	Revision Details	Reviewed	Initials	Date	Approved
		By / Checked			

MERU BYPASS-KEMU-KAMBAKIA ROADS

PLAN AND PROFILE

ROAD: KAMBAKIA-KAGOTONE/KEMU C91 ROAD

CH 1+700 - CH 2+300

DRAWING SCALE:

H: 1:1000
V: 1:100

DRAWING NO:

P P F - KAM/KAG - 0 0 4

Doc. Type | Nature of Work | Number

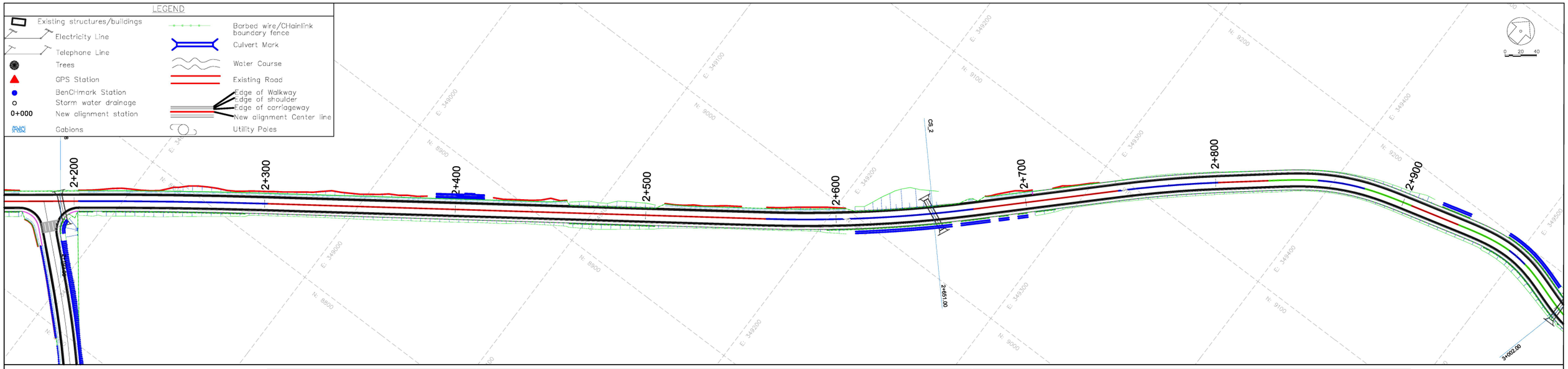

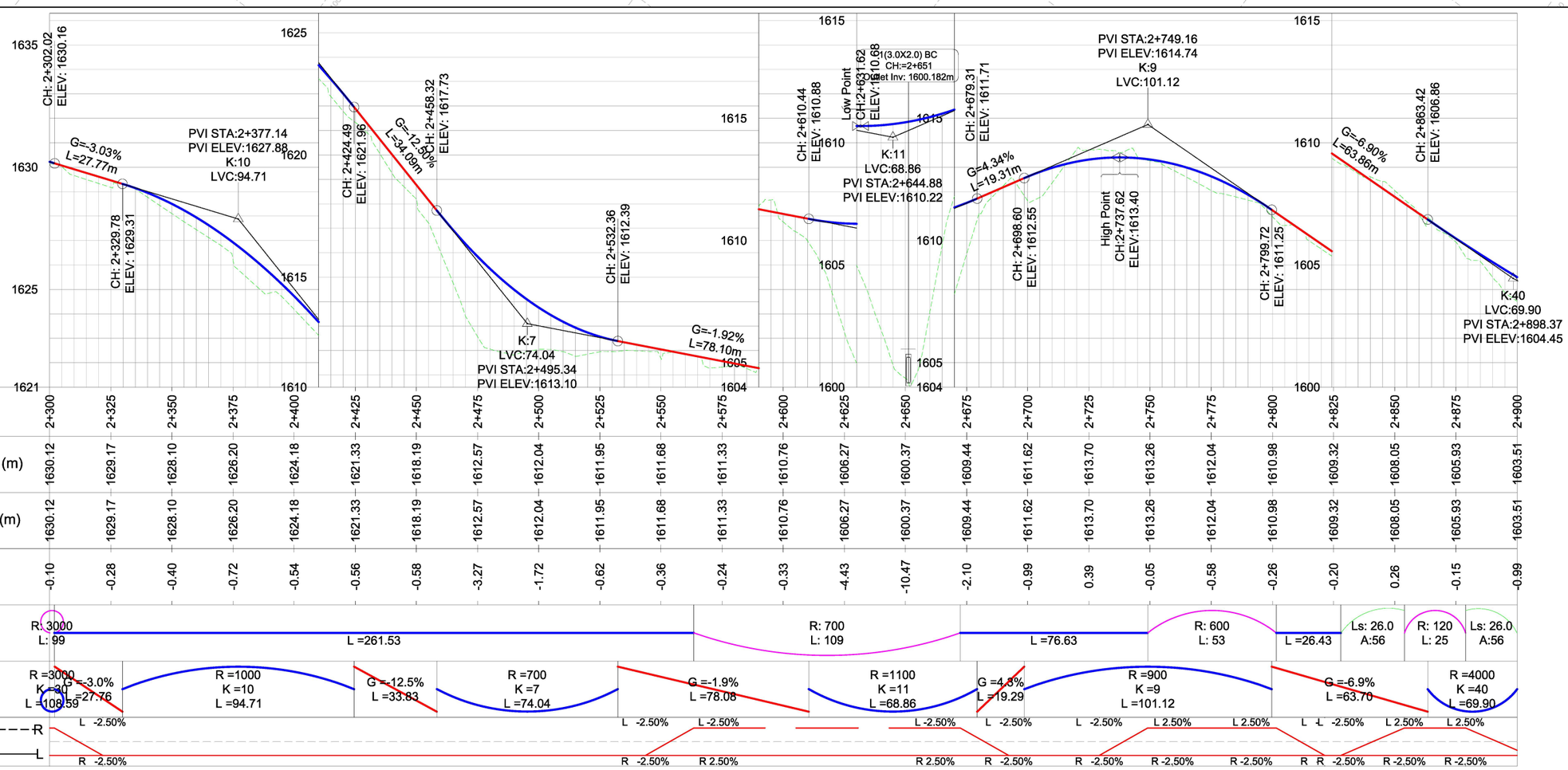

Chainage	2+300	2+325	2+350	2+375	2+400	2+425	2+450	2+475	2+500	2+525	2+550	2+575	2+600	2+625	2+650	2+675	2+700	2+725	2+750	2+775	2+800	2+825	2+850	2+875	2+900
Existing Ground Levels (m)	1630.12	1629.17	1628.10	1626.20	1624.18	1621.33	1618.19	1612.57	1612.04	1611.95	1611.68	1611.33	1610.76	1606.27	1600.37	1609.44	1611.62	1613.70	1613.26	1612.04	1610.98	1609.32	1608.05	1605.93	1603.51
Proposed Road Levels (m)	1630.12	1629.17	1628.10	1626.20	1624.18	1621.33	1618.19	1612.57	1612.04	1611.95	1611.68	1611.33	1610.76	1606.27	1600.37	1609.44	1611.62	1613.70	1613.26	1612.04	1610.98	1609.32	1608.05	1605.93	1603.51
Level Difference (m)	-0.10	-0.28	-0.40	-0.72	-0.54	-0.56	-0.58	-3.27	-1.72	-0.62	-0.36	-0.24	-0.33	-4.43	-10.47	-2.10	-0.99	0.39	-0.05	-0.58	-0.26	-0.20	0.26	-0.15	-0.99

Horizontal Geometry: R: 3000, L: 99 | L =261.53 | R: 700, L: 109 | L =76.63 | R: 600, L: 53 | L =26.43 | Ls: 26.0, A:56 | R: 120, L: 25 | Ls: 26.0, A:56

Vertical Geometry: R =3000, K =30, L =108.59, G =-3.0%, G =-27.76 | R =1000, K =10, L =94.71 | G =-12.5%, L =33.83 | R =700, K =7, L =74.04 | G =-1.9%, L =78.08 | R =1100, K =11, L =68.86 | G =4.3%, L =19.29 | R =900, K =9, L =101.12 | G =-6.9%, L =63.70 | R =4000, K =40, L =69.90

Superelevation: L -2.50% | R -2.50% | L -2.50% | L -2.50% | R -2.50% | R 2.50% | R 2.50% | R -2.50% | L -2.50% | R -2.50% | L -2.50% | L 2.50% | L 2.50% | R -2.50% | L -2.50% | L 2.50% | L 2.50% | R -2.50% | R -2.50% | R -2.50% | R -2.50% | R -2.50% | R -2.50% | R -2.50% | R -2.50%

CLIENT:
Kenya National Highways Authority
Quality Highways, Better Connections
KENYA NATIONAL HIGHWAY AUTHORITY
Barabara Plaza,
Off Airport South Road,
P. O. Box, 49712 - 00100,
NAIROBI.

KENYA URBAN ROADS AUTHORITY
Barabara Plaza,
Off Airport South Road,
P. O. Box, 49712 - 00100,
NAIROBI.

FINANCIER:
THE WORLD BANK

PROJECT:
HORN OF AFRICA GATEWAY DEVELOPMENT PROJECT (HOAGDP): -
Consultancy Services for the Design and Works Supervision for the Proposed Extension of Meru Bypass.

CONTRACT NO:
KeNHA/RD/CS/D/4205/2024

CONSULTANT:
egis
One Padmore Place 6th Floor,
George Padmore Road,
P. O. Box, 76672 - 00508,
NAIROBI.

DESIGN DETAILS

Action	Name	Date
Designed By:	S.A	October 2025
Drawn By:	J.M	October 2025
Checked By:	L.R	October 2025
Approved By:	S.O	October 2025

DRAWING REVISIONS

No.	Revision Details	Reviewed	Initials	Date	Approved
		By / Checked			
		By / Checked			
		By / Checked			
		By / Checked			
		By / Checked			

MERU BYPASS-KEMU-KAMBAKIA ROADS
PLAN AND PROFILE
ROAD: KAMBAKIA-KAGOTONE/KEMU C91 ROAD
CH 2+300 - CH 2+900

DRAWING SCALE:
H: 1:1000
V: 1:100

DRAWING NO:
P P F - KAM/KAG - 0 0 5
Doc. Type | Nature of Work | Number

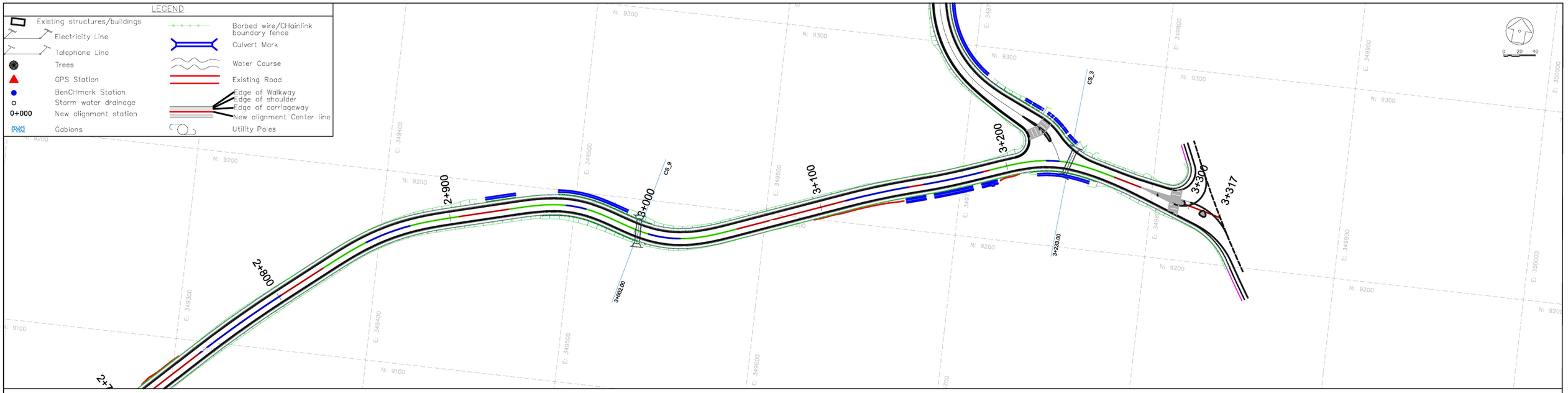

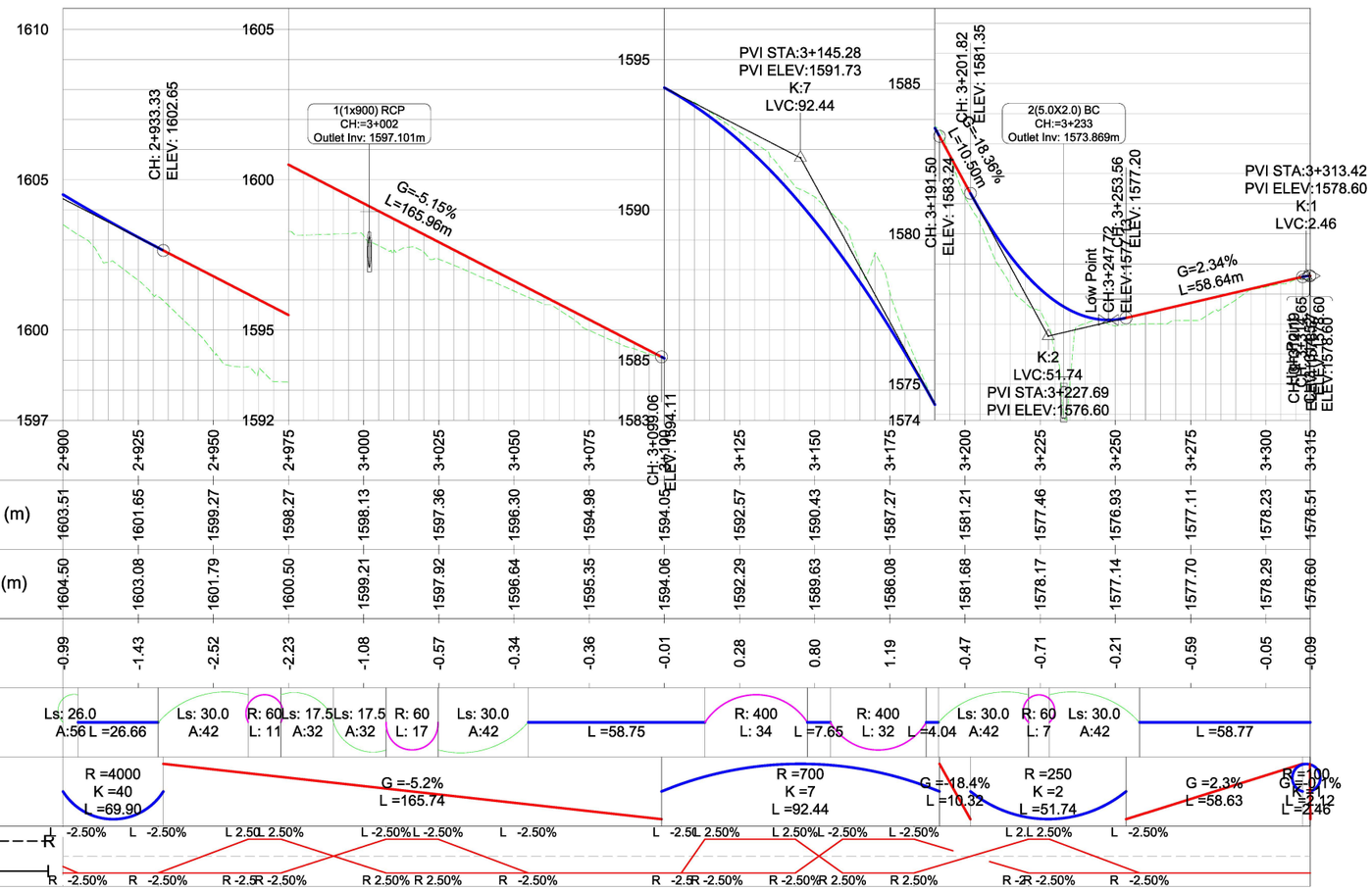

CLIENT:

KENYA NATIONAL HIGHWAY AUTHORITY
Barabara Plaza,
Off Airport South Road,
P. O. Box, 49712 - 00100,
NAIROBI.

KENYA URBAN ROADS AUTHORITY
Barabara Plaza,
Off Airport South Road,
P. O. Box, 49712 - 00100,
NAIROBI.

FINANCIER:

THE WORLD BANK

PROJECT:

HORN OF AFRICA GATEWAY DEVELOPMENT PROJECT (HOAGDP): -

Consultancy Services for the Design and Works Supervision for the Proposed Extension of Meru Bypass.

CONTRACT NO:

KeNHA/RD/CS/D/4205/2024

CONSULTANT:

egis

One Padmore Place 6th Floor,
George Padmore Road,
P. O. Box, 76672 - 00508,
NAIROBI.

DESIGN DETAILS

Action	Name	Date
Designed By:	S.A	October 2025
Drawn By:	J.M	October 2025
Checked By:	L.R	October 2025
Approved By:	S.O	October 2025

DRAWING REVISIONS

No.	Revision Details	Reviewed	Initials	Date	Approved
		By			
		Checked			
		By			
		Checked			
		By			
		Checked			
		By			
		Checked			
		By			
		Checked			

MERU BYPASS-KEMU-KAMBAKIA ROADS

PLAN AND PROFILE

ROAD: KAMBAKIA-KAGOTONE/KEMU C91 ROAD

CH 2+900 - CH 3+317

DRAWING SCALE:

H: 1:1000
V: 1:100

DRAWING NO:

P P F - KAM/KAG - 0 0 6

Doc. Type | Nature of Work | Number

1.3 KAGOTONE - KEMU LINK C91 ROAD

PLANS AND PROFILES

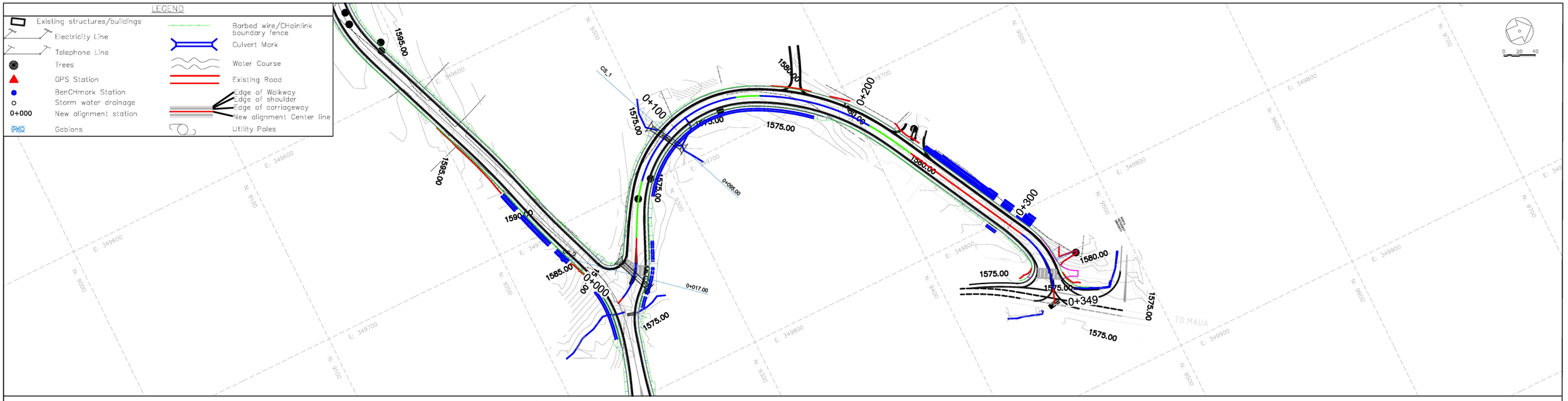

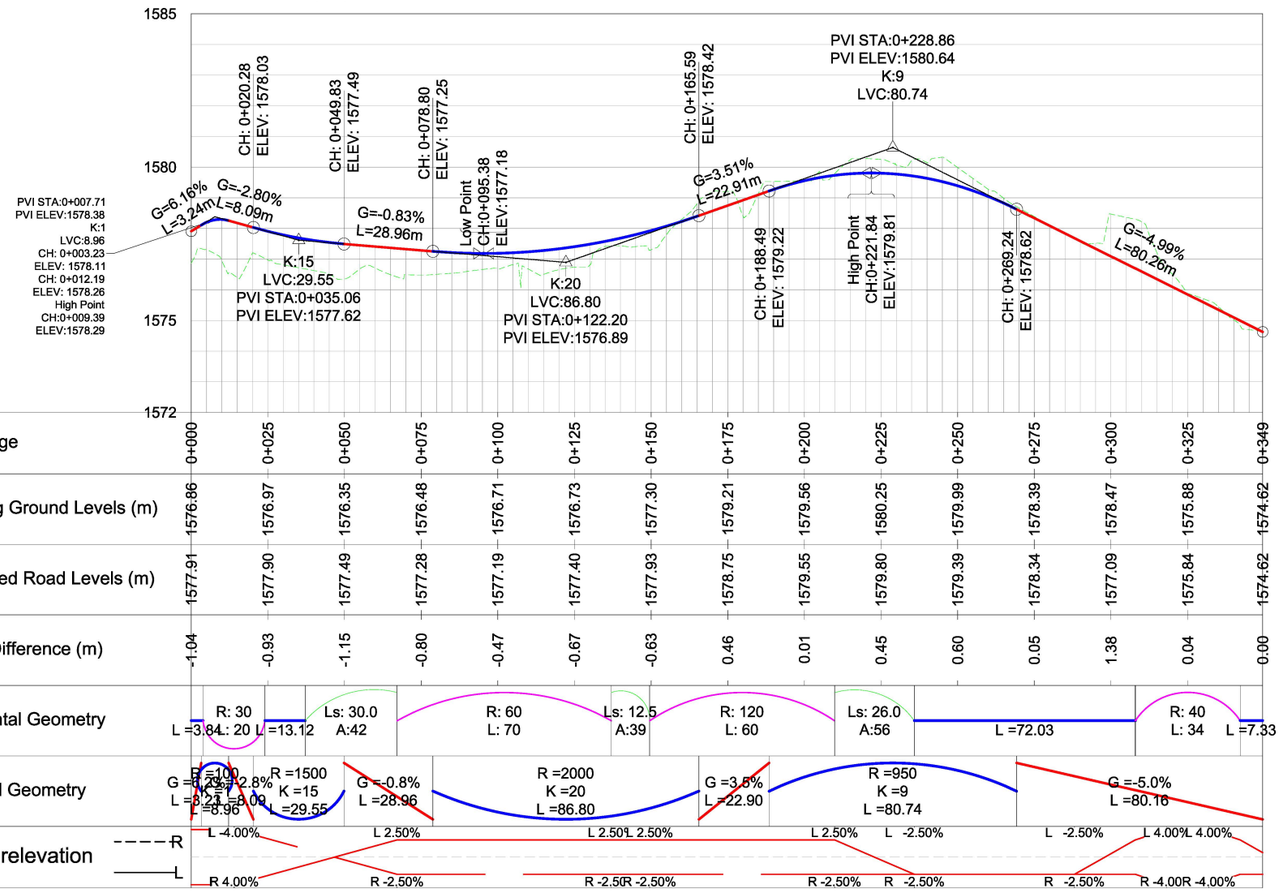

CLIENT:

KENYA NATIONAL HIGHWAY AUTHORITY
Barabara Plaza,
Off Airport South Road,
P. O. Box, 49712 - 00100,
NAIROBI.

KENYA URBAN ROADS AUTHORITY
Barabara Plaza,
Off Airport South Road,
P. O. Box, 49712 - 00100,
NAIROBI.

FINANCIER:

THE WORLD BANK

PROJECT:

HORN OF AFRICA GATEWAY DEVELOPMENT PROJECT (HOAGDP): -

Consultancy Services for the Design and Works Supervision for the Proposed Extension of Meru Bypass.

CONTRACT NO:

KeNHA/RD/CS/D/4205/2024

CONSULTANT:

egis

One Padmore Place 6th Floor,
George Padmore Road,
P. O. Box, 76672 - 00508,
NAIROBI.

DESIGN DETAILS

Action	Name	Date
Designed By:	S.A	October 2025
Drawn By:	J.M	October 2025
Checked By:	L.R	October 2025
Approved By:	S.O	October 2025

DRAWING REVISIONS

No.	Revision Details	Reviewed	Initials	Date	Approved
		By			
		Checked			
		By			
		Checked			
		By			
		Checked			
		By			
		Checked			
		By			
		Checked			

MERU BYPASS-KEMU-KAMBAKIA ROADS

PLAN AND PROFILE

ROAD: KAGOTONE-KEMU LINK C91

CH 0+000 - CH 0+349

DRAWING SCALE:

H: 1:1000
V: 1:100

DRAWING NO:

P P F - KAG/KEM - 0 0 1
Doc. Type | Nature of Work | Number

1.4 KONGOACHEKE JCT - KWA MUKURU JCT

PLANS AND PROFILES

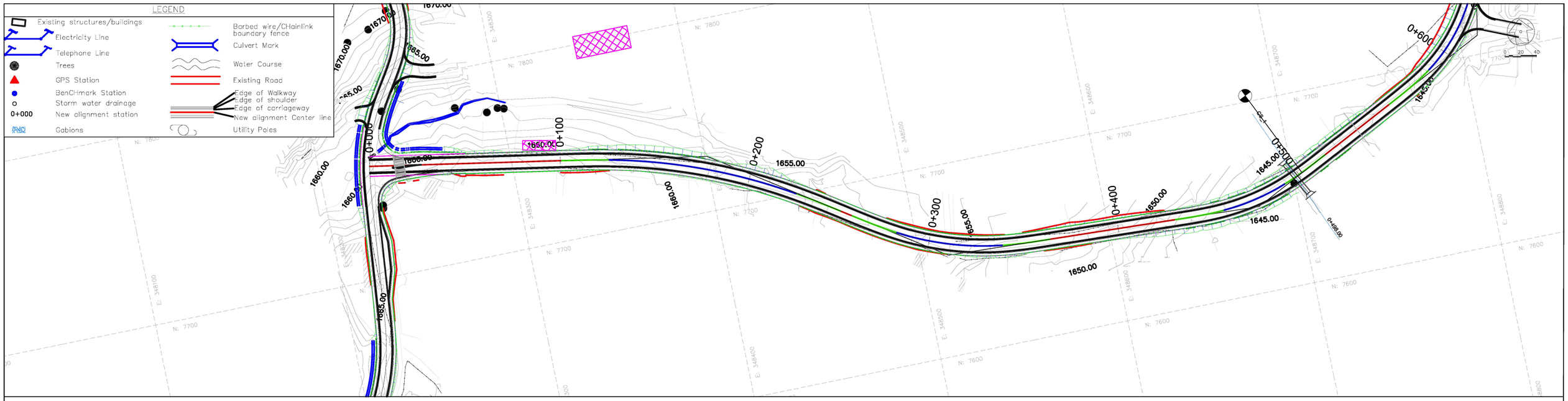

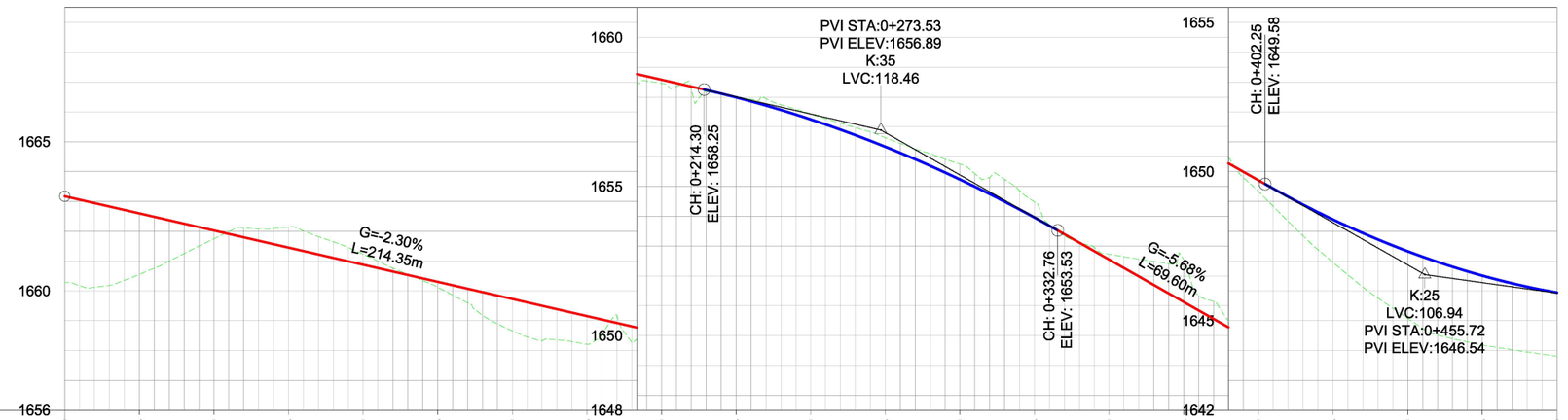

Chainage	0+000	0+025	0+050	0+075	0+100	0+125	0+150	0+175	0+200	0+225	0+250	0+275	0+300	0+325	0+350	0+375	0+400	0+425	0+450	0+475	0+500
Existing Ground Levels (m)	1660.27	1660.55	1661.74	1662.14	1661.22	1660.12	1658.66	1658.21	1658.46	1658.01	1657.44	1656.64	1655.75	1654.48	1652.73	1652.55	1649.34	1646.95	1645.08	1644.18	1643.81
Proposed Road Levels (m)	1663.17	1662.59	1662.02	1661.45	1660.87	1660.30	1659.73	1659.15	1658.58	1657.99	1657.25	1656.33	1655.23	1653.96	1652.55	1651.13	1649.71	1648.39	1647.32	1646.51	1645.94
Level Difference (m)	-2.90	-2.04	-0.28	0.69	0.35	-0.18	-1.07	-0.94	-0.12	0.02	0.19	0.31	0.52	0.52	0.18	1.42	-0.36	-1.44	-2.25	-2.32	-2.13

Horizontal Geometry: L =100.78 | Ls: 25.0 A:87 | R: 300 L: 101 | Ls: 25.0 A:87 | L =6.27 | Ls: 25.0 A:61 | R: 150 L: 57 | Ls: 25.0 A:61 | L =66.23 | Ls: 26.0 A:56 | R: 120 L: 35 | Ls: 26.0 A:56

Vertical Geometry: G =-2.3% L =214.30 | R =3501 K =35 L =118.46 | G =-5.7% L =69.49 | R =2500 K =25 L =106.94

Superelevation: L -2.50% L 2.50% | L 2.50% L -2.50% | L -2.50% L -2.50% | R -2.50% R -2.50% | R -2.50% R -2.50% | R 2.50% R -2.50% | L -2.50% L -2.50% | R -2.50% R 2.50% R 2.50%

CLIENT:

KENYA NATIONAL HIGHWAY AUTHORITY
Barabara Plaza,
Off Airport South Road,
P. O. Box, 49712 - 00100,
NAIROBI.

KENYA URBAN ROADS AUTHORITY
Barabara Plaza,
Off Airport South Road,
P. O. Box, 49712 - 00100,
NAIROBI.

FINANCIER: THE WORLD BANK

PROJECT:
HORN OF AFRICA GATEWAY DEVELOPMENT PROJECT (HOAGDP): -
Consultancy Services for the Design and Works Supervision for the Proposed Extension of Meru Bypass.

CONTRACT NO:
KeNHA/RD/CS/D/4205/2024

CONSULTANT:
egis
One Padmore Place 6th Floor,
George Padmore Road,
P. O. Box, 76672 - 00508,
NAIROBI.

DESIGN DETAILS

Action	Name	Date
Designed By:	S.A	October 2025
Drawn By:	J.M	October 2025
Checked By:	L.R	October 2025
Approved By:	S.O	October 2025

DRAWING REVISIONS

No.	Revision Details	Reviewed	Initials	Date	Approved
		By			
		Checked			
		By			
		Checked			
		By			
		Checked			
		By			
		Checked			
		By			
		Checked			

MERU BYPASS-KEMU-KAMBAKIA ROADS
PLAN AND PROFILE
ROAD: KONGOACHEKE JCT-KWA MUKURU JCT
CH 0+000 - CH 0+500

DRAWING SCALE:
H: 1:1000
V: 1:100

DRAWING NO:
PPF - KOG/KWAG - 001
Doc. Type | Nature of Work | Number

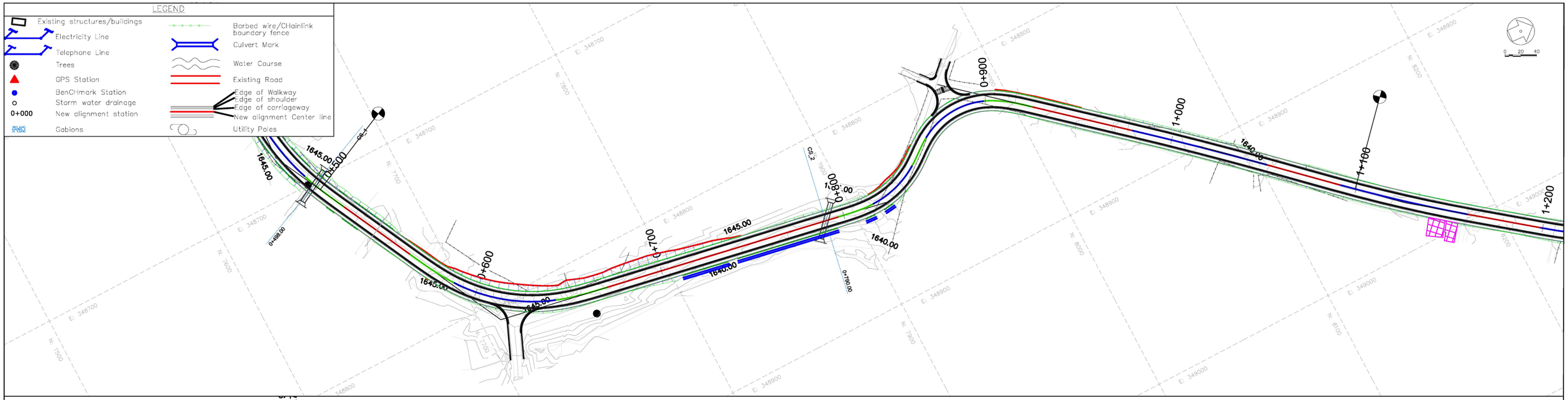

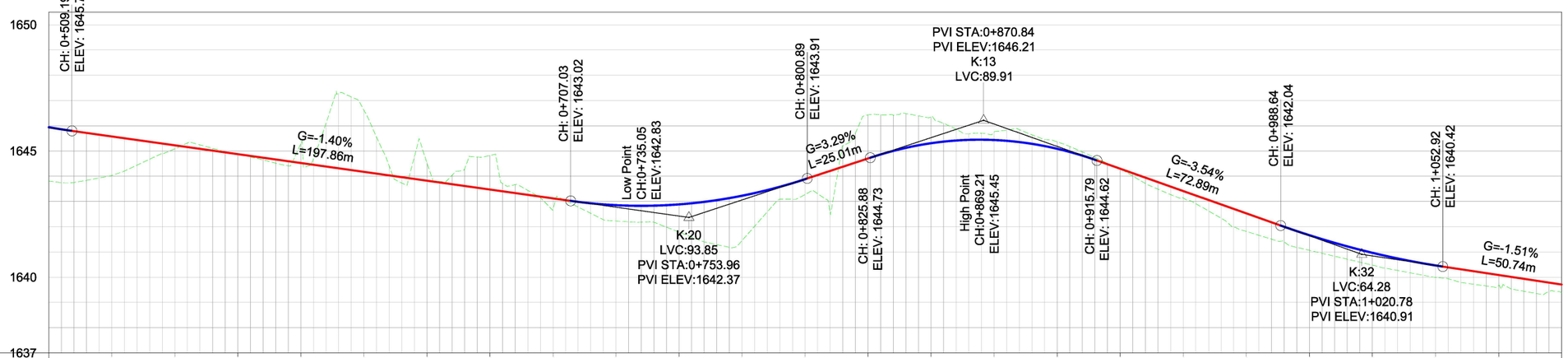

Chainage	0+500	0+525	0+550	0+575	0+600	0+625	0+650	0+675	0+700	0+725	0+750	0+775	0+800	0+825	0+850	0+875	0+900	0+925	0+950	0+975	1+000	1+025	1+050	1+075	1+100
Existing Ground Levels (m)	1643.81	1644.03	1645.08	1644.88	1645.29	1646.62	1644.53	1644.82	1642.68	1642.23	1641.79	1641.45	1643.27	1646.43	1646.35	1645.74	1645.36	1644.28	1643.14	1641.81	1641.06	1640.48	1639.99	1639.67	1639.40
Proposed Road Levels (m)	1645.94	1645.57	1645.22	1644.87	1644.52	1644.17	1643.82	1643.47	1643.12	1642.85	1642.88	1643.23	1643.88	1644.70	1645.31	1645.43	1645.09	1644.30	1643.41	1642.53	1641.66	1640.96	1640.47	1640.09	1639.71
Level Difference (m)	-2.13	-1.54	-0.14	0.01	0.77	2.44	0.71	1.35	-0.44	-0.63	-1.10	-1.78	-0.61	1.73	1.04	0.31	0.28	-0.02	-0.27	-0.71	-0.60	-0.49	-0.47	-0.42	-0.31
Horizontal Geometry	Ls: 26.0 A:56	L =42.57	Ls: 27.5 A:50	R: 90 L: 55	Ls: 27.5 A:50	L =127.13	Ls: 19.2 A:31	R: 50 L: 29	Ls: 6.8 A:18	Ls: 9.5 A:20	R: 40 L: 37	Ls: 25.6 A:32	L =53.72	R: 2000 L: 73	L =39.73	R: 800 L: 69									
Vertical Geometry	R =2500 K =25 L =106.94	G =-1.4% L =197.84	R =2000 K =20 L =93.85	G =3.3% L =25.00	R =1316 K =13 L =89.91	G =-3.5% L =72.84	R =3169 K =32 L =64.28	G =-1.5% L =50.73																	
Superelevation	R	L -2.50%	L -2.50%	L -2.50%	L -2.50%	L -2.50%	L -2.50%	L -2.50%	L -2.50%	L -2.50%	L -2.50%	L 4.00%	L 4.00%	L -2.50%	L -2.50%	L 2.50%	L 2.50%									
	L	R -2.50%	R -2.50%	R 2.50%	R 2.50%	R -2.50%	R -2.50%	R 2.50%	R 2.50%	R 2.50%	R -4.00%	R -4.00%	R -2.50%	R -2.50%	R -2.50%	R -2.50%										

CLIENT:

KENYA NATIONAL HIGHWAY AUTHORITY
Barabara Plaza,
Off Airport South Road,
P. O. Box, 49712 - 00100,
NAIROBI.

KENYA URBAN ROADS AUTHORITY
Barabara Plaza,
Off Airport South Road,
P. O. Box, 49712 - 00100,
NAIROBI.

FINANCIER:

THE WORLD BANK

PROJECT:

HORN OF AFRICA GATEWAY DEVELOPMENT PROJECT (HOAGDP): -

Consultancy Services for the Design and Works Supervision for the Proposed Extension of Meru Bypass.

CONTRACT NO:

KeNHA/RD/CS/D/4205/2024

CONSULTANT:

egis

One Padmore Place 6th Floor,
George Padmore Road,
P. O. Box, 76672 - 00508,
NAIROBI.

DESIGN DETAILS

Action	Name	Date
Designed By:	S.A	October 2025
Drawn By:	J.M	October 2025
Checked By:	L.R	October 2025
Approved By:	S.O	October 2025

DRAWING REVISIONS

No.	Revision Details	Reviewed	Initials	Date	Approved
		By			
		Checked			
		By			
		Checked			
		By			
		Checked			
		By			
		Checked			
		By			
		Checked			

MERU BYPASS-KEMU-KAMBAKIA ROADS

PLAN AND PROFILE

ROAD: KONGOACHEKE JCT-KWA MUKURU JCT

CH 0+500 - CH 1+100

DRAWING SCALE:

H: 1:1000
V: 1:100

DRAWING NO:

P P F - KOG/KWAG - 0 0 2

Doc. Type | Nature of Work | Number

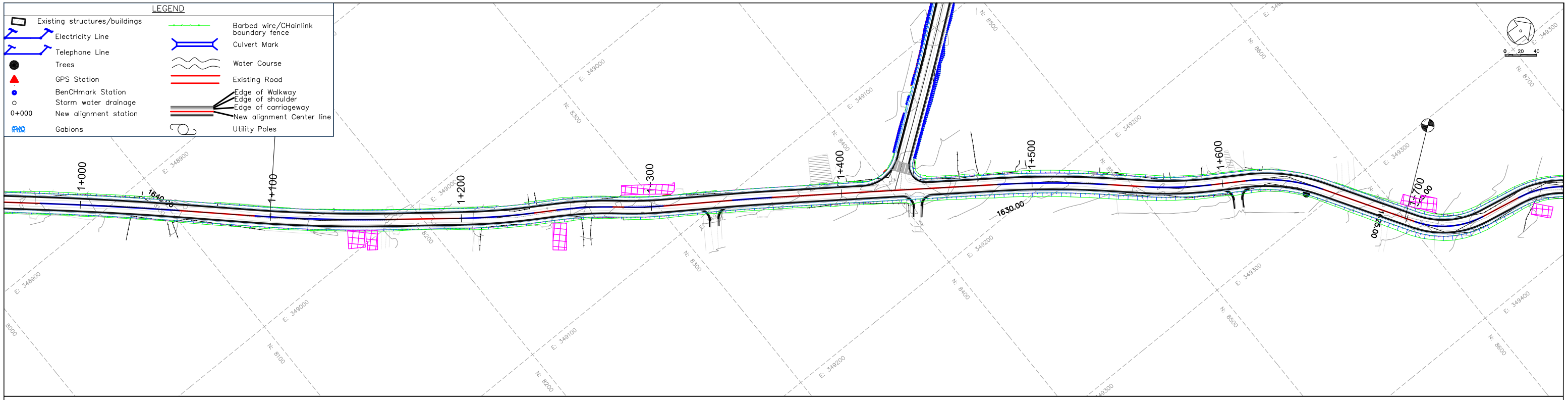

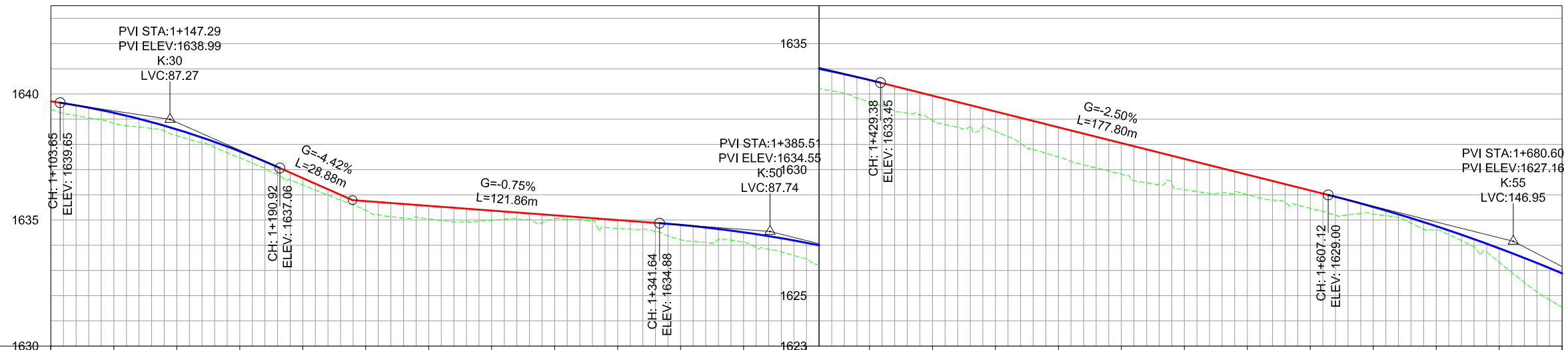

Chainage	1+100	1+125	1+150	1+175	1+200	1+225	1+250	1+275	1+300	1+325	1+350	1+375	1+400	1+425	1+450	1+475	1+500	1+525	1+550	1+575	1+600	1+625	1+650	1+675	1+700
Existing Ground Levels (m)	1639.40	1638.84	1638.35	1637.47	1636.39	1635.39	1635.05	1635.00	1635.05	1634.67	1634.22	1634.14	1633.45	1632.68	1631.95	1631.52	1630.50	1629.82	1629.20	1629.01	1628.47	1628.24	1627.60	1626.33	1624.54
Proposed Road Levels (m)	1639.71	1639.25	1638.59	1637.73	1636.66	1635.75	1635.56	1635.37	1635.19	1635.00	1634.81	1634.51	1634.10	1633.56	1632.93	1632.31	1631.68	1631.05	1630.43	1629.80	1629.17	1628.52	1627.76	1626.88	1625.89
Level Difference (m)	-0.31	-0.41	-0.25	-0.26	-0.27	-0.36	-0.51	-0.38	-0.14	-0.33	-0.59	-0.38	-0.65	-0.87	-0.98	-0.78	-1.18	-1.23	-1.23	-0.79	-0.71	-0.28	-0.15	-0.55	-1.34
Horizontal Geometry	R: 800 L: 69	L =38.79	R: 350 L: 39	L =11.87	R: 200 L: 29	L =6.20	R: 200 L: 20	L =36.22	R: 800 L: 21	L =118.50							R: 500 L: 58	L =19.37	R: 200 L: 35	L =18.22	R: 90 L: 41	L =50.99			
Vertical Geometry	G =-1.5% L =50.73	R =3000 K =30 L =87.27	G =-4.4% L =28.85	G =-0.7% L =121.86					R =5000 K =50 L =87.74	G =-2.5% L =177.74												R =5500 K =55 L =146.95			
Superelevation	L -2.50% R 2.50%	L -2.50% R 2.50%	L -2.50% R -2.50%	L -2.50% R 2.50%	L -2.50% R 2.50%	L -2.50% R -2.50%	L 2.50% R -2.50%	L 2.50% R -2.50%	L -2.50% R 2.50%	L -2.50% R -2.50%	L 2.50% R -2.50%	L -2.50% R -2.50%					L -2.50% R -2.50%	L 2.50% R -2.50%	L 2.50% R -2.50%	L -2.50% R 2.50%	L -2.50% R 2.50%	L -2.50% R -2.50%	L 2.50% R -2.50%	L 2.50% R -2.50%	L -2.50% R -2.50%

CLIENT:

KENYA NATIONAL HIGHWAY AUTHORITY
Barabara Plaza,
Off Airport South Road,
P. O. Box, 49712 - 00100,
NAIROBI.

KENYA URBAN ROADS AUTHORITY
Barabara Plaza,
Off Airport South Road,
P. O. Box, 49712 - 00100,
NAIROBI.

FINANCIER:

THE WORLD BANK

PROJECT:

HORN OF AFRICA GATEWAY DEVELOPMENT PROJECT (HOAGDP): -

Consultancy Services for the Design and Works Supervision for the Proposed Extension of Meru Bypass.

CONTRACT NO:

KeNHA/RD/CS/D/4205/2024

CONSULTANT:

egis

One Padmore Place 6th Floor,
George Padmore Road,
P. O. Box, 76672 - 00508,
NAIROBI.

DESIGN DETAILS

Action	Name	Date
Designed By:	S.A	October 2025
Drawn By:	J.M	October 2025
Checked By:	L.R	October 2025
Approved By:	S.O	October 2025

DRAWING REVISIONS

No.	Revision Details	Reviewed	Initials	Date	Approved
		By			
		Checked			
		By			
		Checked			
		By			
		Checked			
		By			
		Checked			
		By			
		Checked			

MERU BYPASS-KEMU-KAMBAKIA ROADS

PLAN AND PROFILE

ROAD: KONGOACHEKE JCT-KWA MUKURU JCT

CH 1+100 - CH 1+700

DRAWING SCALE:

H: 1:1000
V: 1:1000

DRAWING NO:

P P F - KOG/KWAG - 0 0 3
Doc. Type | Nature of Work | Number

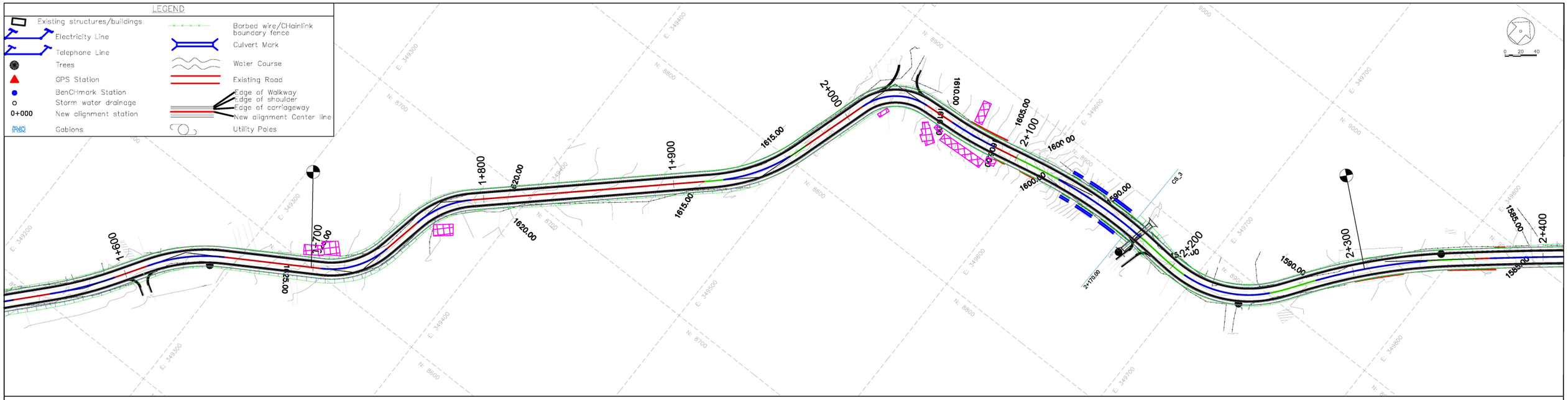

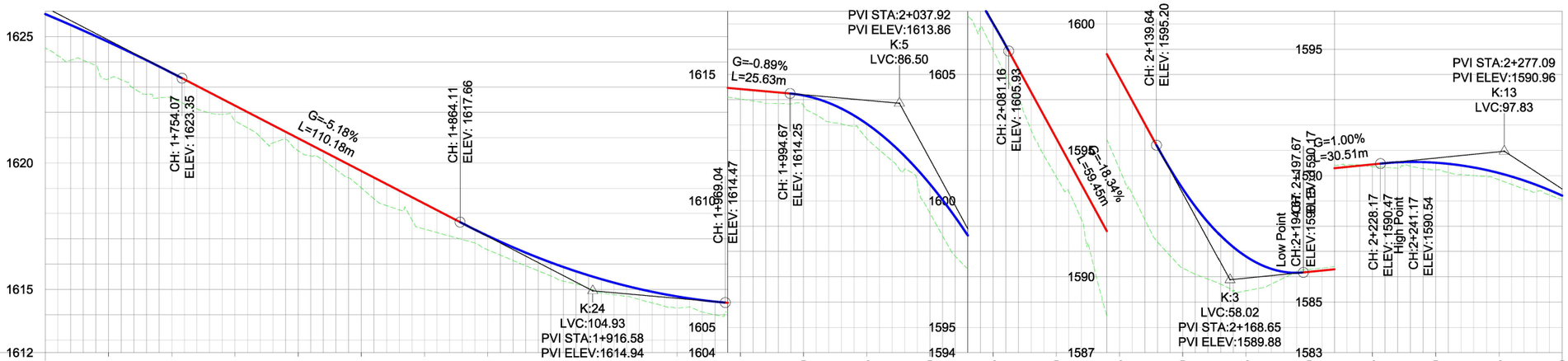

Chainage	1+700	1+725	1+750	1+775	1+800	1+825	1+850	1+875	1+900	1+925	1+950	1+975	2+000	2+025	2+050	2+075	2+100	2+125	2+150	2+175	2+200	2+225	2+250	2+275	2+300
Existing Ground Levels (m)	1624.54	1623.33	1622.55	1621.67	1620.49	1619.01	1617.38	1616.57	1615.53	1614.79	1614.26	1614.03	1613.76	1612.46	1609.51	1605.96	1600.94	1594.26	1590.34	1589.44	1590.29	1590.36	1590.22	1589.83	1589.05
Proposed Road Levels (m)	1625.89	1624.78	1623.56	1622.27	1620.98	1619.68	1618.39	1617.12	1616.06	1615.26	1614.72	1614.42	1614.17	1613.05	1610.66	1607.02	1602.47	1597.89	1593.48	1590.80	1590.19	1590.44	1590.51	1590.10	1589.21
Level Difference (m)	-1.34	-1.45	-1.01	-0.60	-0.49	-0.67	-1.01	-0.55	-0.53	-0.47	-0.46	-0.39	-0.41	-0.58	-1.15	-1.06	-1.53	-3.63	-3.14	-1.36	0.10	-0.09	-0.29	-0.27	-0.16
Horizontal Geometry	L =50.99	R: 45 L: 37	L =20.95	R: 50 L: 31	L =122.64				Ls: 10.0 A:30	R: 90 L: 37	Ls: 10.0 A:30	L =36.09		R: 30 L: 36	L =16.03	R: 200 L: 26	L =12.40	Ls: 25.0 A:79	R: 250 L: 53	Ls: 12.5 A:56	Ls: 17.5 A:32	R: 60 L: 47	Ls: 12.5 A:27	Ls: 12.5 A:61	R: 300 L: 60
Vertical Geometry	R =5500 K =55 L =146.95		G =-5.2% L =110.04						R =2449 K =24 L =104.93			G =-0.9% L =25.63		R =496 K =5 L =86.50		G =-18.3% L =58.48			R =300 K =3 L =58.02		G =1.0% L =30.51			R =1302 K =13 L =97.83	
Superelevation R	L -4.00%	L -4.00%	L 2.50%	L 2.50%	L -2.50%				L -2.50%	-2.50%	L -2.50%	-2.50%	L -2.50%		L 4.00%	L 4.00%	L -2.50%	L -2.50%	L -2.50%	L 2.50%	L 2.50%	L -2.50%		L -2.50%	L 2.50%	
Superelevation L	R 4.00%	R 4.00%	R -2.50%	R -2.50%	R -2.50%				R -2.50%	R 2.50%	R 2.50%	R -2.50%	R -2.50%		R -4.00%	R -4.00%	R 2.50%	R 2.50%	R -2.50%	R -2.50%	R -2.50%	R 2.50%		R 2.50%	R -2.50%	

CLIENT:

Kenya National Highways Authority
Quality Highways, Better Connections

KENYA NATIONAL HIGHWAY AUTHORITY
Barabara Plaza,
Off Airport South Road,
P. O. Box, 49712 - 00100,
NAIROBI.

KENYA URBAN ROADS AUTHORITY
Barabara Plaza,
Off Airport South Road,
P. O. Box, 49712 - 00100,
NAIROBI.

FINANCIER:

THE WORLD BANK

PROJECT:

HORN OF AFRICA GATEWAY DEVELOPMENT PROJECT (HOAGDP): -

Consultancy Services for the Design and Works Supervision for the Proposed Extension of Meru Bypass.

CONTRACT NO:

KeNHA/RD/CS/D/4205/2024

CONSULTANT:

egis

One Padmore Place 6th Floor,
George Padmore Road,
P. O. Box, 76672 - 00508,
NAIROBI.

DESIGN DETAILS

Action	Name	Date
Designed By:	S.A	October 2025
Drawn By:	J.M	October 2025
Checked By:	L.R	October 2025
Approved By:	S.O	October 2025

DRAWING REVISIONS

No.	Revision Details	Reviewed	Initials	Date	Approved
		By			
		Checked			
		By			
		Checked			
		By			
		Checked			
		By			
		Checked			
		By			
		Checked			

MERU BYPASS-KEMU-KAMBAKIA ROADS

PLAN AND PROFILE

ROAD: KONGOACHEKE JCT-KWA MUKURU JCT

CH 1+700 - CH 2+300

DRAWING SCALE:

H: 1:1000
V: 1:100

DRAWING NO:

P P F - KOG/KWAG - 0 0 4

Doc. Type | Nature of Work | Number

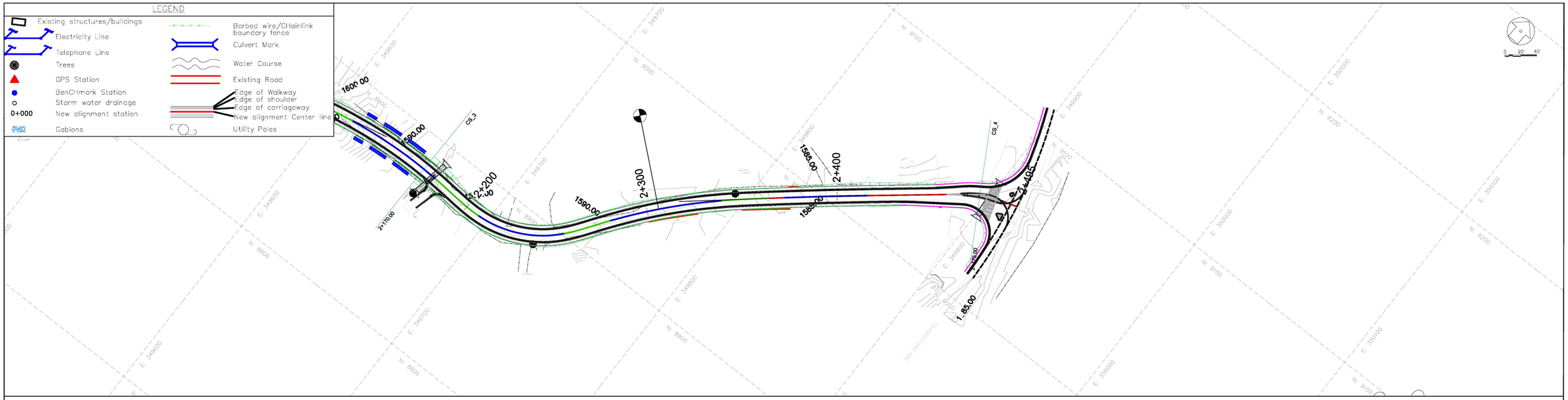

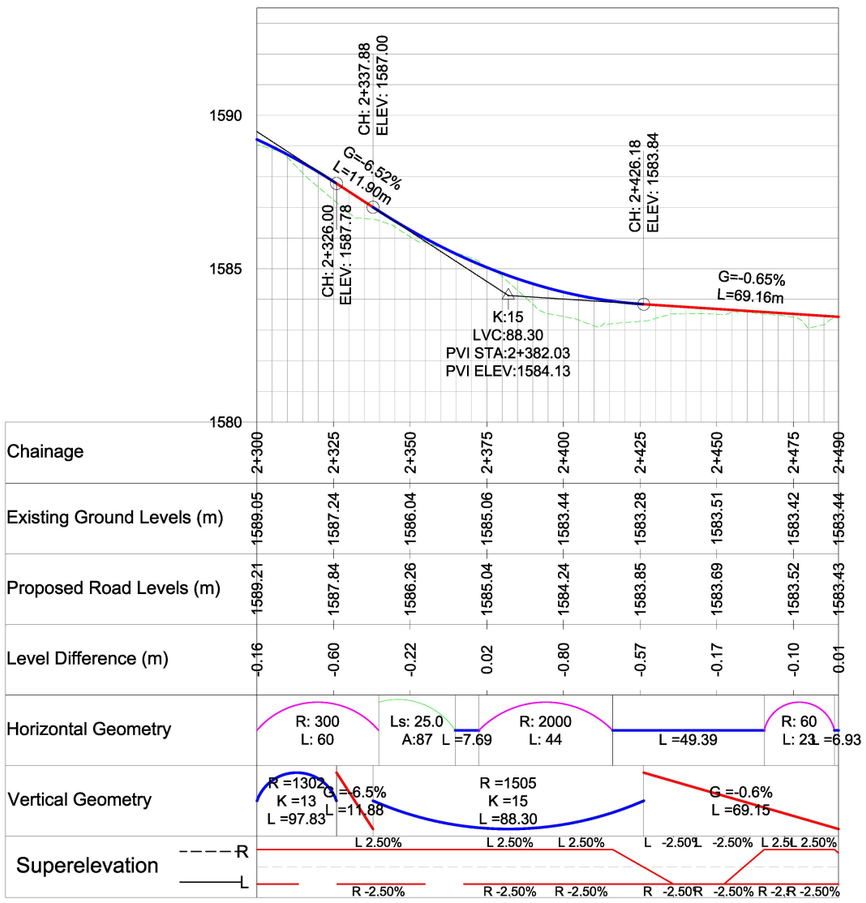

CLIENT:

KENYA NATIONAL HIGHWAY AUTHORITY
Barabara Plaza,
Off Airport South Road,
P. O. Box, 49712 - 00100,
NAIROBI.

KENYA URBAN ROADS AUTHORITY
Barabara Plaza,
Off Airport South Road,
P. O. Box, 49712 - 00100,
NAIROBI.

FINANCIER:

THE WORLD BANK

PROJECT:

HORN OF AFRICA GATEWAY DEVELOPMENT PROJECT (HOAGDP): -

Consultancy Services for the Design and Works Supervision for the Proposed Extension of Meru Bypass.

CONTRACT NO:

KeNHA/RD/CS/D/4205/2024

CONSULTANT:

egis

One Padmore Place 6th Floor,
George Padmore Road,
P. O. Box, 76672 - 00508,
NAIROBI.

DESIGN DETAILS

Action	Name	Date
Designed By:	S.A	October 2025
Drawn By:	J.M	October 2025
Checked By:	L.R	October 2025
Approved By:	S.O	October 2025

DRAWING REVISIONS

No.	Revision Details	Reviewed	Initials	Date	Approved
		By			
		Checked			
		By			
		Checked			
		By			
		Checked			
		By			
		Checked			
		By			
		Checked			

MERU BYPASS-KEMU-KAMBAKIA ROADS

PLAN AND PROFILE

ROAD: KONGOACHEKE JCT-KWA MUKURU JCT

CH 2+300 - CH 2+490

DRAWING SCALE:

H: 1:1000
V: 1:100

DRAWING NO:

PPF - KOG/KWAG - 005

Doc. Type | Nature of Work | Number

1.5 KONGO GARDENS - KAMBAKIA ROAD

PLANS AND PROFILES

LEGEND

- Existing structures/buildings
- Electricity Line
- Telephone Line
- Trees
- GPS Station
- BenCHmark Station
- Storm water drainage
- 0+000 New alignment station
- Gabions
- Barbed wire/CHainlink boundary fence
- Culvert Mark
- Water Course
- Existing Road
- Edge of Walkway
- Edge of shoulder
- Edge of carriageway
- New alignment Center line
- Utility Poles

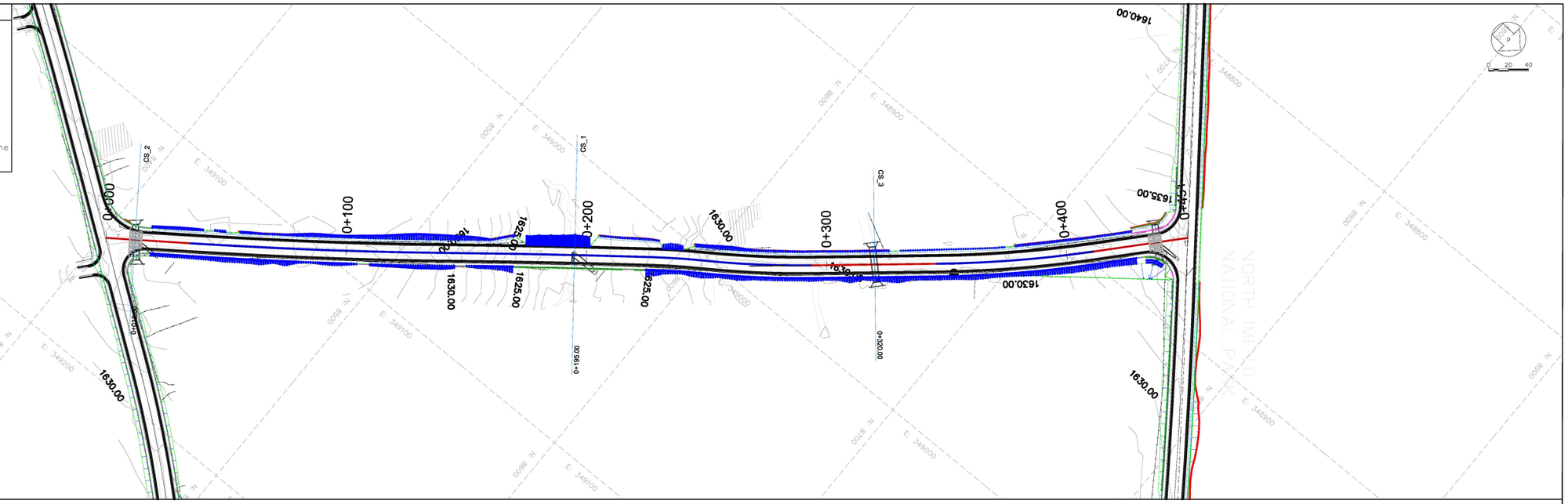

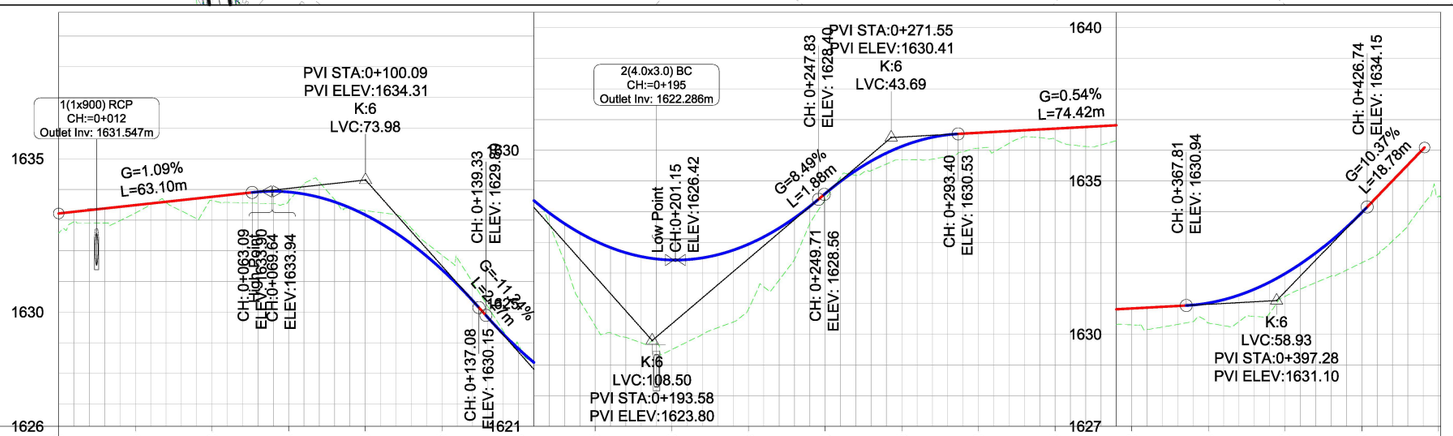

Chainage	0+000	0+025	0+050	0+075	0+100	0+125	0+150	0+175	0+200	0+225	0+250	0+275	0+300	0+325	0+350	0+375	0+400	0+425	0+450
Existing Ground Levels (m)	1632.58	1633.23	1633.63	1633.62	1633.31	1631.86	1628.93	1624.27	1623.50	1624.82	1628.38	1629.68	1630.07	1630.34	1630.31	1630.37	1631.23	1632.33	1634.43
Proposed Road Levels (m)	1633.21	1633.49	1633.76	1633.91	1633.17	1631.38	1628.80	1627.04	1626.42	1626.94	1628.58	1630.12	1630.57	1630.70	1630.84	1631.02	1631.98	1633.97	
Level Difference (m)	-0.64	-0.26	-0.13	-0.30	0.14	0.47	0.13	-2.77	-2.92	-2.11	-0.21	-0.44	-0.50	-0.36	-0.53	-0.65	-0.74	-1.64	
Horizontal Geometry	L =35.04	R: 2000 L: 108			R: 4000 L: 84			R: 300 L: 21	R: 400 L: 45	L =51.77	R: 500 L: 66						L =39.18		
Vertical Geometry	G =1.1% L =63.09	R =600 K =6 L =73.98	G =-11.2% L =2.25	R =550 K =6 L =108.50	G =8.5% L =1.88	R =550 K =6 L =43.69	G =0.5% L =74.42	R =600 K =6 L =58.93	G =10.4% L =18.68										
Superelevation (R / L)	L -2.50% / R -2.50%	L -2.50% / R 2.50%	L -2.50% / R 2.50%	L -2.50% / R -2.50%	L 2.50% / R -2.50%	L 2.50% / R -2.50%	L 2.50% / R 2.50%	L -2.50% / R -2.50%	L -2.50% / R 2.50%	L -2.50% / R 2.50%	L -2.50% / R 2.50%	L -2.50% / R -2.50%	L -2.50% / R 2.50%	L -2.50% / R 2.50%	L -2.50% / R 2.50%	L -2.50% / R 2.50%	L -2.50% / R -2.50%		

CLIENT:

Kenya National Highways Authority
Quality Highways, Better Connections

KENYA NATIONAL HIGHWAY AUTHORITY
Barabara Plaza,
Off Airport South Road,
P. O. Box, 49712 - 00100,
NAIROBI.

KENYA URBAN ROADS AUTHORITY
Barabara Plaza,
Off Airport South Road,
P. O. Box, 49712 - 00100,
NAIROBI.

FINANCIER:

THE WORLD BANK

PROJECT:

HORN OF AFRICA GATEWAY DEVELOPMENT PROJECT (HOAGDP): -

Consultancy Services for the Design and Works Supervision for the Proposed Extension of Meru Bypass.

CONTRACT NO:

KeNHA/RD/CS/D/4205/2024

CONSULTANT:

egis

One Padmore Place 6th Floor,
George Padmore Road,
P. O. Box, 76672 - 00508,
NAIROBI.

DESIGN DETAILS

Action	Name	Date
Designed By:	S.A	October 2025
Drawn By:	J.M	October 2025
Checked By:	L.R	October 2025
Approved By:	S.O	October 2025

DRAWING REVISIONS

No.	Revision Details	Reviewed	Initials	Date	Approved
		By			
		Checked			
		By			
		Checked			
		By			
		Checked			
		By			
		Checked			
		By			
		Checked			

MERU BYPASS-KEMU-KAMBAKIA ROADS

PLAN AND PROFILE

ROAD: KONGO GARDENS-KAMBAKIA LINK ROAD

CH 0+000 - CH 0+451

DRAWING SCALE:

H: 1:1000
V: 1:100

DRAWING NO:

P P F - GAR/KAM - 0 0 1

Doc. Type | Nature of Work | Number

MERU BY-PASS ROADS

2. RUNOGONE-KAITHE ROADS

PLANS AND PROFILES

LEGEND

- Existing structures/buildings
- Electricity Line
- Telephone Line
- Trees
- GPS Station
- BenCHmark Station
- Storm water drainage
- 0+000 New alignment station
- Gabions
- Barbed wire/CHainlink boundary fence
- Culvert Mark
- Water Course
- Existing Road
- Edge of Walkway
- Edge of shoulder
- Edge of carriageway
- New alignment Center line
- Utility Poles

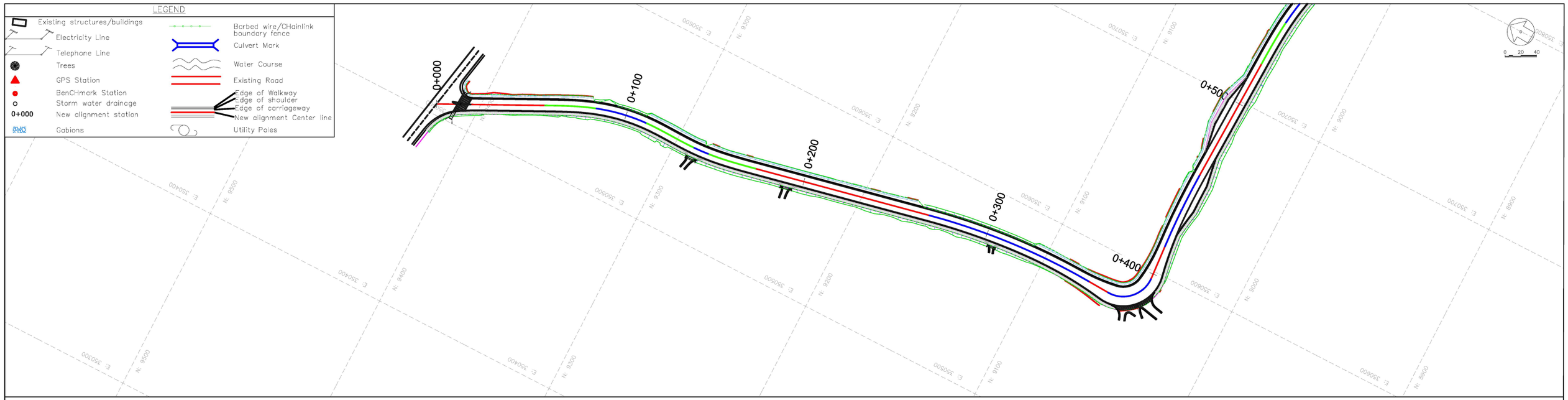

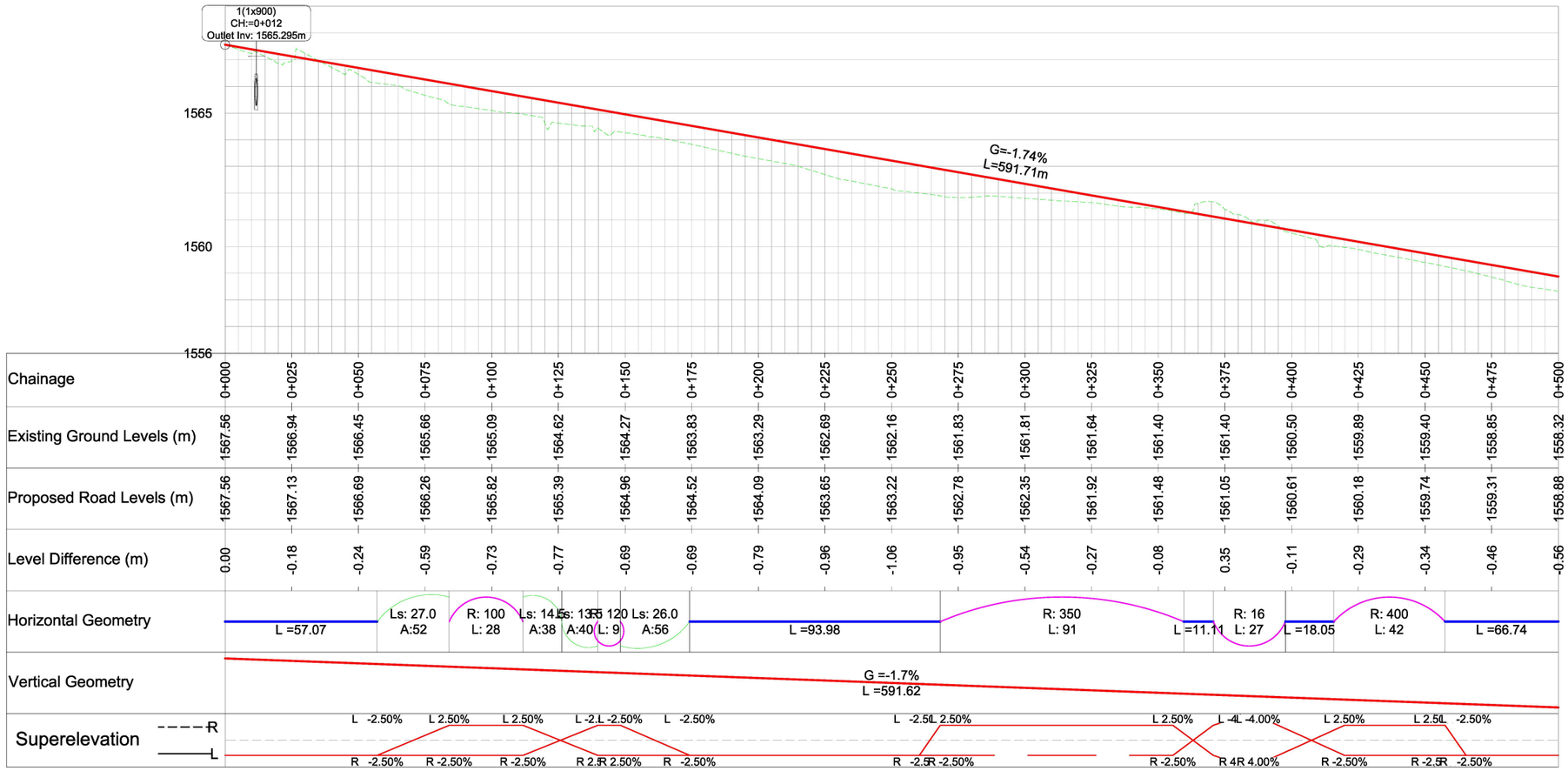

CLIENT:

KENYA NATIONAL HIGHWAY AUTHORITY
Barabara Plaza,
Off Airport South Road,
P. O. Box, 49712 - 00100,
NAIROBI.

KENYA URBAN ROADS AUTHORITY
Barabara Plaza,
Off Airport South Road,
P. O. Box, 49712 - 00100,
NAIROBI.

FINANCIER: THE WORLD BANK

PROJECT:
HORN OF AFRICA GATEWAY DEVELOPMENT PROJECT (HOAGDP): -

Consultancy Services for the Design and Works Supervision for the Proposed Extension of Meru Bypass.

CONTRACT NO:
KeNHA/RD/CS/D/4205/2024

CONSULTANT:

One Padmore Place 6th Floor,
George Padmore Road,
P. O. Box, 76672 - 00508,
NAIROBI.

DESIGN DETAILS

Action	Name	Date
Designed By:	S.A	October 2025
Drawn By:	J.M	October 2025
Checked By:	L.R	October 2025
Approved By:	S.O	October 2025

DRAWING REVISIONS

No.	Revision Details	Reviewed	Initials	Date	Approved
		By / Checked			

MERU BYPASS-RUNOGONE-KAITHE

PLAN AND PROFILE

ROAD: RUNOGONE-KAITHE

CH 0+000 - CH 0+500

DRAWING SCALE:
H: 1:1000
V: 1:100

DRAWING NO:
PPF - RUN/KAI - 001
Doc. Type | Nature of Work | Number

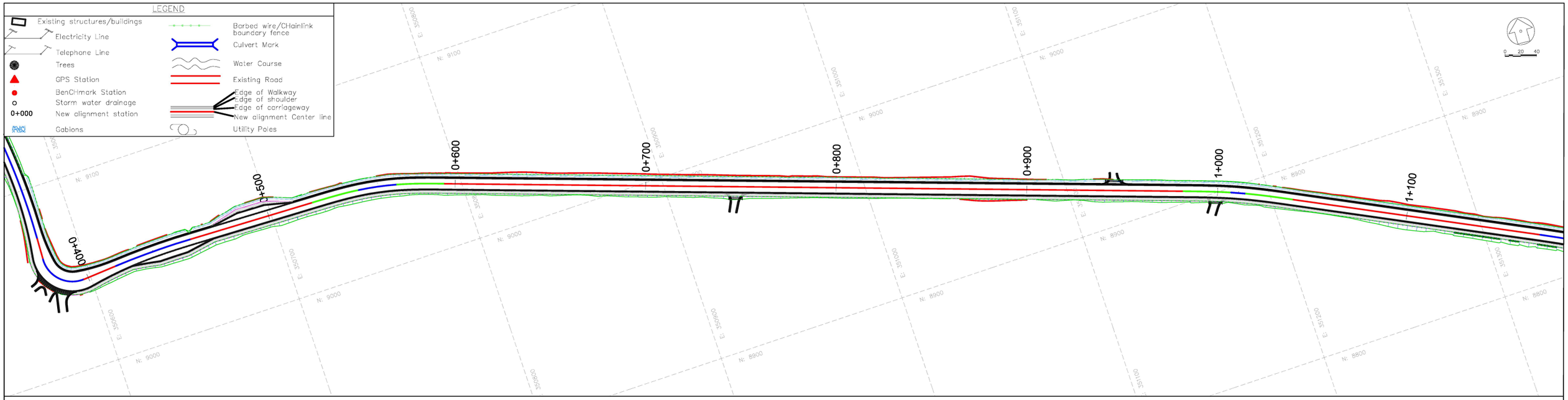

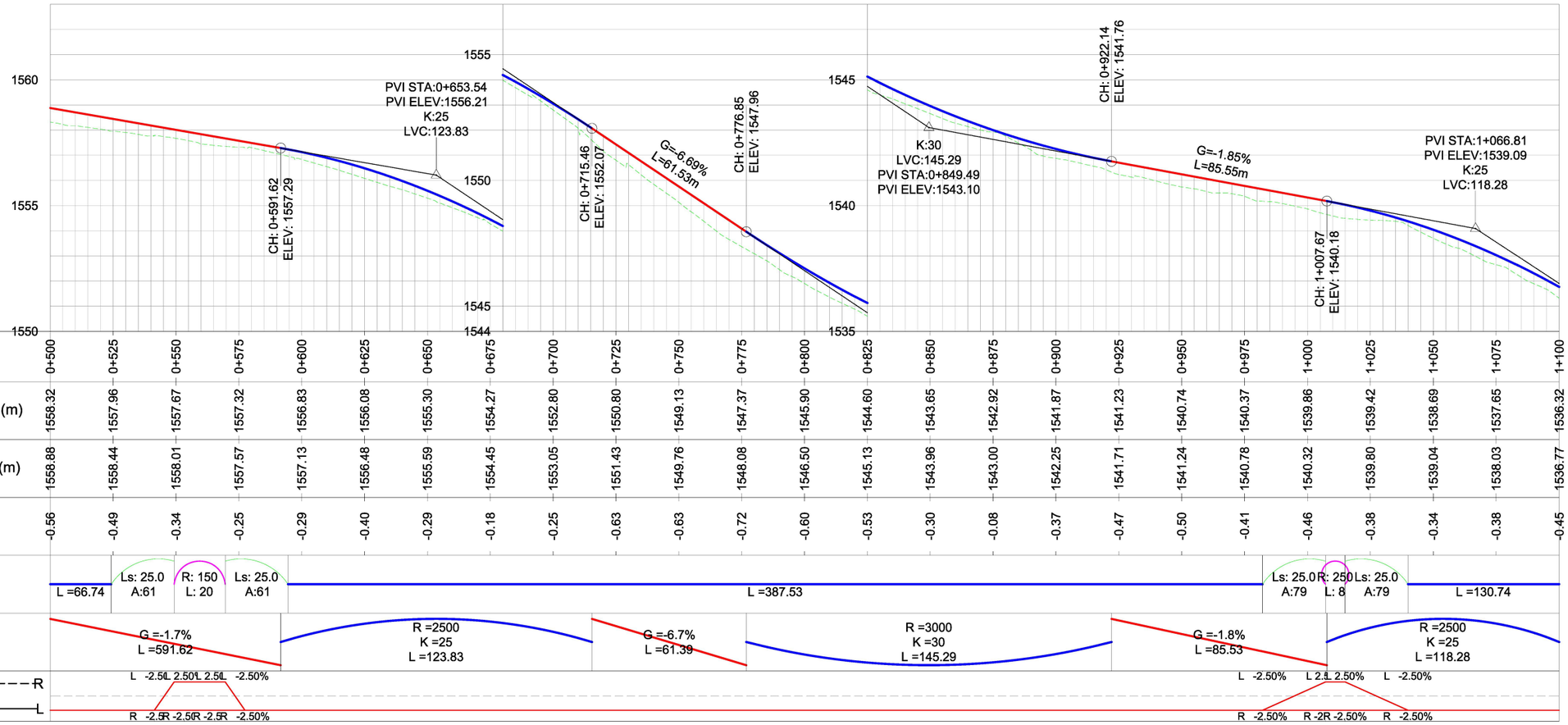

Chainage	Existing Ground Levels (m)	Proposed Road Levels (m)	Level Difference (m)
0+500	1558.32	1558.88	-0.56
0+525	1557.96	1558.44	-0.49
0+550	1557.67	1558.01	-0.34
0+575	1557.32	1557.57	-0.25
0+600	1556.83	1557.13	-0.29
0+625	1556.08	1556.48	-0.40
0+650	1555.30	1555.59	-0.29
0+675	1554.27	1554.45	-0.18
0+700	1552.80	1553.05	-0.25
0+725	1550.80	1551.43	-0.63
0+750	1549.13	1549.76	-0.63
0+775	1547.37	1548.08	-0.72
0+800	1545.90	1546.50	-0.60
0+825	1544.60	1545.13	-0.53
0+850	1543.65	1543.96	-0.30
0+875	1542.92	1543.00	-0.08
0+900	1541.87	1542.25	-0.37
0+925	1541.23	1541.71	-0.47
0+950	1540.74	1541.24	-0.50
0+975	1540.37	1540.78	-0.41
1+000	1539.86	1540.32	-0.46
1+025	1539.42	1539.80	-0.38
1+050	1538.69	1539.04	-0.34
1+075	1537.65	1538.03	-0.38
1+100	1536.32	1536.77	-0.45

CLIENT:

Kenya National Highways Authority
Quality Highways, Better Connections

KENYA NATIONAL HIGHWAY AUTHORITY
Barabara Plaza,
Off Airport South Road,
P. O. Box, 49712 - 00100,
NAIROBI.

KENYA URBAN ROADS AUTHORITY
Barabara Plaza,
Off Airport South Road,
P. O. Box, 49712 - 00100,
NAIROBI.

FINANCIER:

THE WORLD BANK

PROJECT:

HORN OF AFRICA GATEWAY DEVELOPMENT PROJECT (HOAGDP): -

Consultancy Services for the Design and Works Supervision for the Proposed Extension of Meru Bypass.

CONTRACT NO:

KeNHA/RD/CS/D/4205/2024

CONSULTANT:

egis

One Padmore Place 6th Floor,
George Padmore Road,
P. O. Box, 76672 - 00508,
NAIROBI.

DESIGN DETAILS

Action	Name	Date
Designed By:	S.A	October 2025
Drawn By:	J.M	October 2025
Checked By:	L.R	October 2025
Approved By:	S.O	October 2025

DRAWING REVISIONS

No.	Revision Details	Reviewed	Initials	Date	Approved
		By			
		Checked			
		By			
		Checked			
		By			
		Checked			
		By			
		Checked			
		By			
		Checked			

MERU BYPASS-RUNOGONE-KAITHE

PLAN AND PROFILE

ROAD: RUNOGONE-KAITHE

CH 0+500 - CH 1+100

DRAWING SCALE:

H: 1:1000
V: 1:100

DRAWING NO:

P P F - RUN/KAI - 0 0 2

Doc. Type | Nature of Work | Number

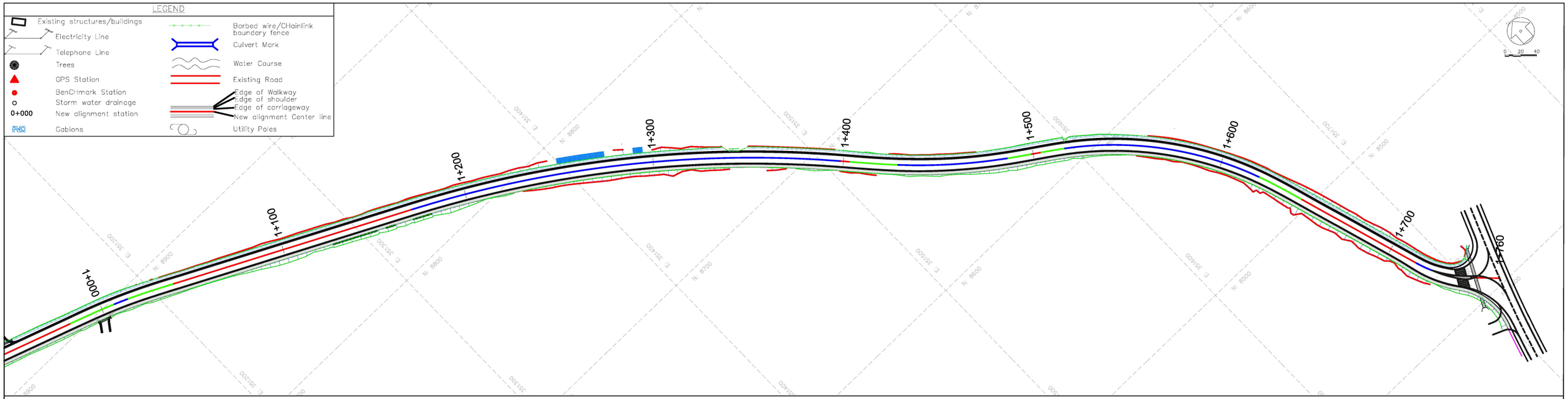

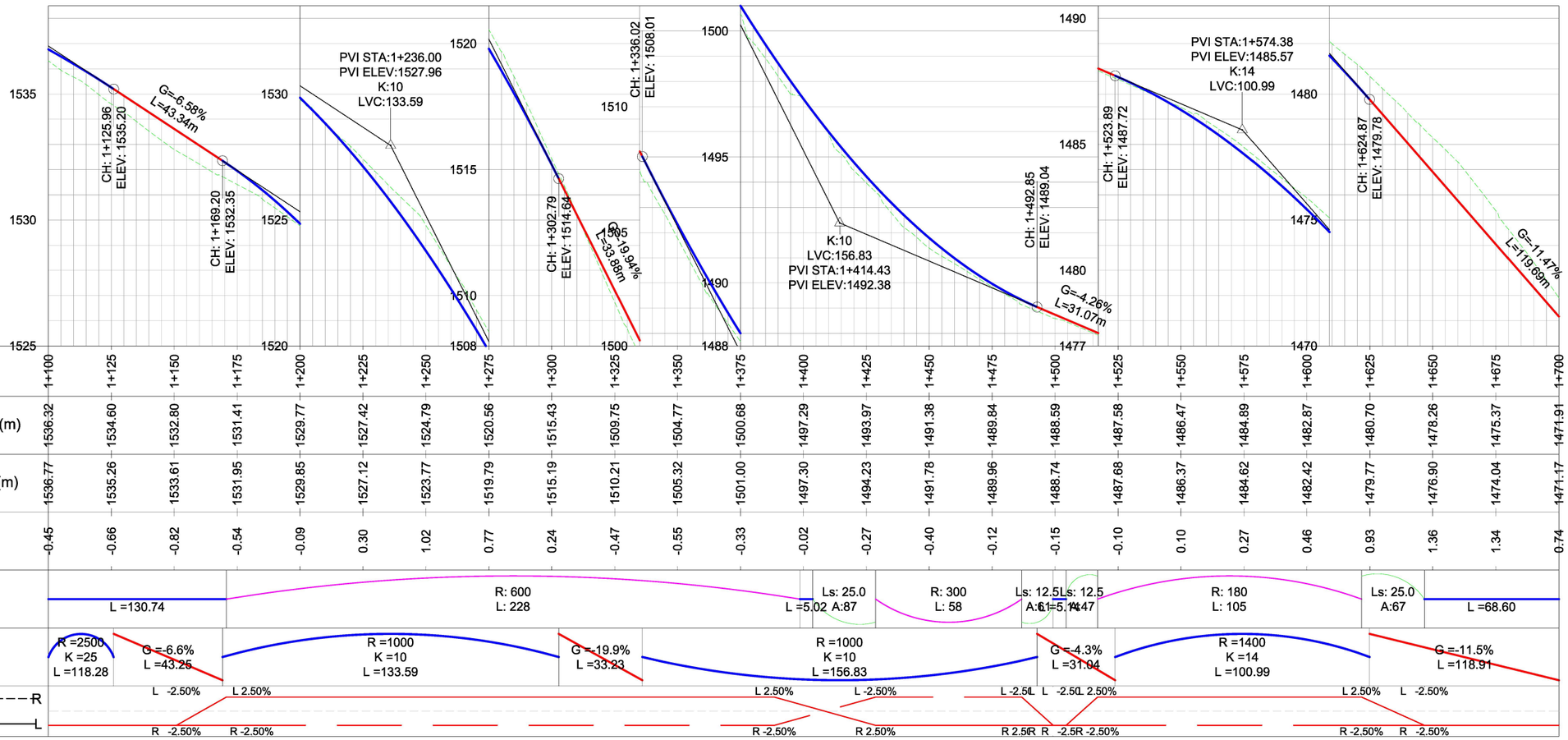

CLIENT:

KENYA NATIONAL HIGHWAY AUTHORITY
Barabara Plaza,
Off Airport South Road,
P. O. Box, 49712 - 00100,
NAIROBI.

KENYA URBAN ROADS AUTHORITY
Barabara Plaza,
Off Airport South Road,
P. O. Box, 49712 - 00100,
NAIROBI.

FINANCIER:

THE WORLD BANK

PROJECT:

HORN OF AFRICA GATEWAY DEVELOPMENT PROJECT (HOAGDP): -

Consultancy Services for the Design and Works Supervision for the Proposed Extension of Meru Bypass.

CONTRACT NO:

KeNHA/RD/CS/D/4205/2024

CONSULTANT:

egis

One Padmore Place 6th Floor,
George Padmore Road,
P. O. Box, 76672 - 00508,
NAIROBI.

DESIGN DETAILS

Action	Name	Date
Designed By:	S.A	October 2025
Drawn By:	J.M	October 2025
Checked By:	L.R	October 2025
Approved By:	S.O	October 2025

DRAWING REVISIONS

No.	Revision Details	Reviewed	Initials	Date	Approved
		By			
		Checked			
		By			
		Checked			
		By			
		Checked			
		By			
		Checked			
		By			
		Checked			

MERU BYPASS-RUNOGONE-KAITHE

PLAN AND PROFILE

ROAD: RUNOGONE-KAITHE

CH 1+100 - CH 1+700

DRAWING SCALE:

H: 1:1000
V: 1:100

DRAWING NO:

PPF - RUN/KAI - 003

Doc. Type | Nature of Work | Number

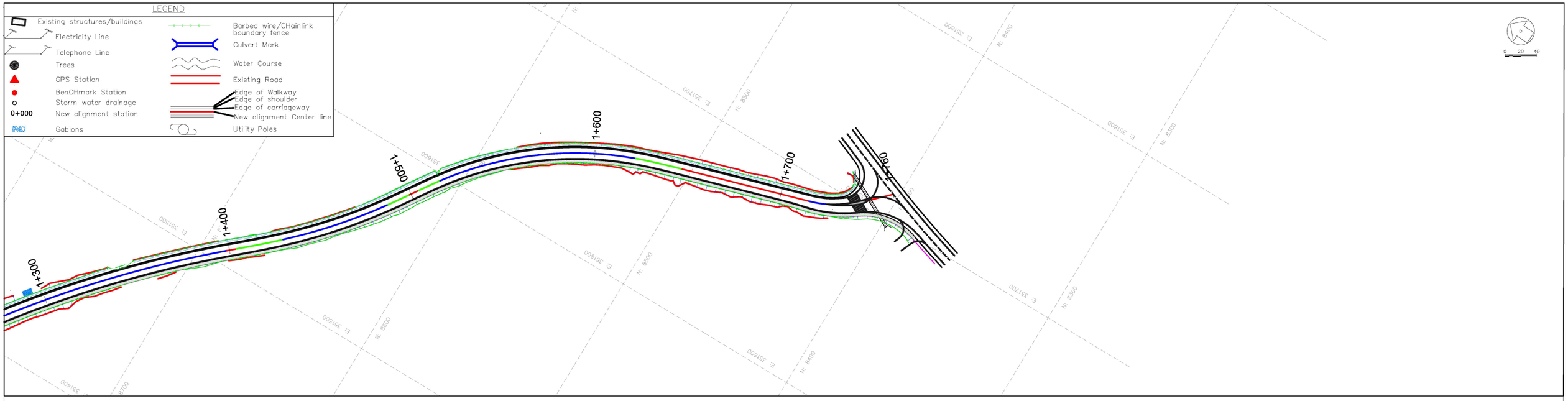

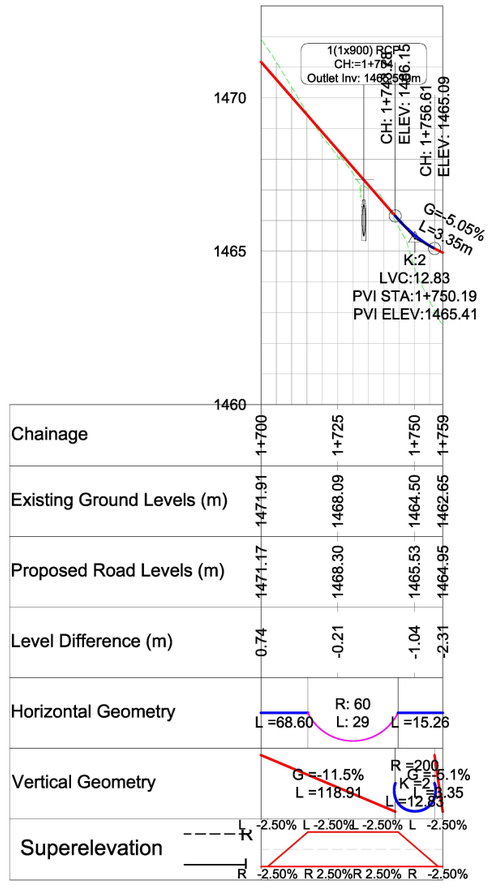

CLIENT:

KENYA NATIONAL HIGHWAY AUTHORITY
Barabara Plaza,
Off Airport South Road,
P. O. Box, 49712 - 00100,
NAIROBI.

KENYA URBAN ROADS AUTHORITY
Barabara Plaza,
Off Airport South Road,
P. O. Box, 49712 - 00100,
NAIROBI.

FINANCIER:

THE WORLD BANK

PROJECT:

HORN OF AFRICA GATEWAY DEVELOPMENT PROJECT (HOAGDP): -

Consultancy Services for the Design and Works Supervision for the Proposed Extension of Meru Bypass.

CONTRACT NO:

KeNHA/RD/CS/D/4205/2024

CONSULTANT:

egis

One Padmore Place 6th Floor,
George Padmore Road,
P. O. Box, 76672 - 00508,
NAIROBI.

DESIGN DETAILS

Action	Name	Date
Designed By:	S.A	October 2025
Drawn By:	J.M	October 2025
Checked By:	L.R	October 2025
Approved By:	S.O	October 2025

DRAWING REVISIONS

No.	Revision Details	Reviewed	Initials	Date	Approved
		By			
		Checked			
		By			
		Checked			
		By			
		Checked			
		By			
		Checked			
		By			
		Checked			

MERU BYPASS-RUNOGONE-KAITHE

PLAN AND PROFILE

ROAD: RUNOGONE-KAITHE

CH 1+700 - CH 1+760

DRAWING SCALE:

H: 1:1000
V: 1:100

DRAWING NO:

PPF - RUN/KAI - 004

Doc. Type | Nature of Work | Number

MERU BY-PASS ROADS

3. HOSPITAL ROADS

PLANS AND PROFILES

3.1. HOSPITAL ROAD - KIRAMBURINE JCT

PLANS AND PROFILES



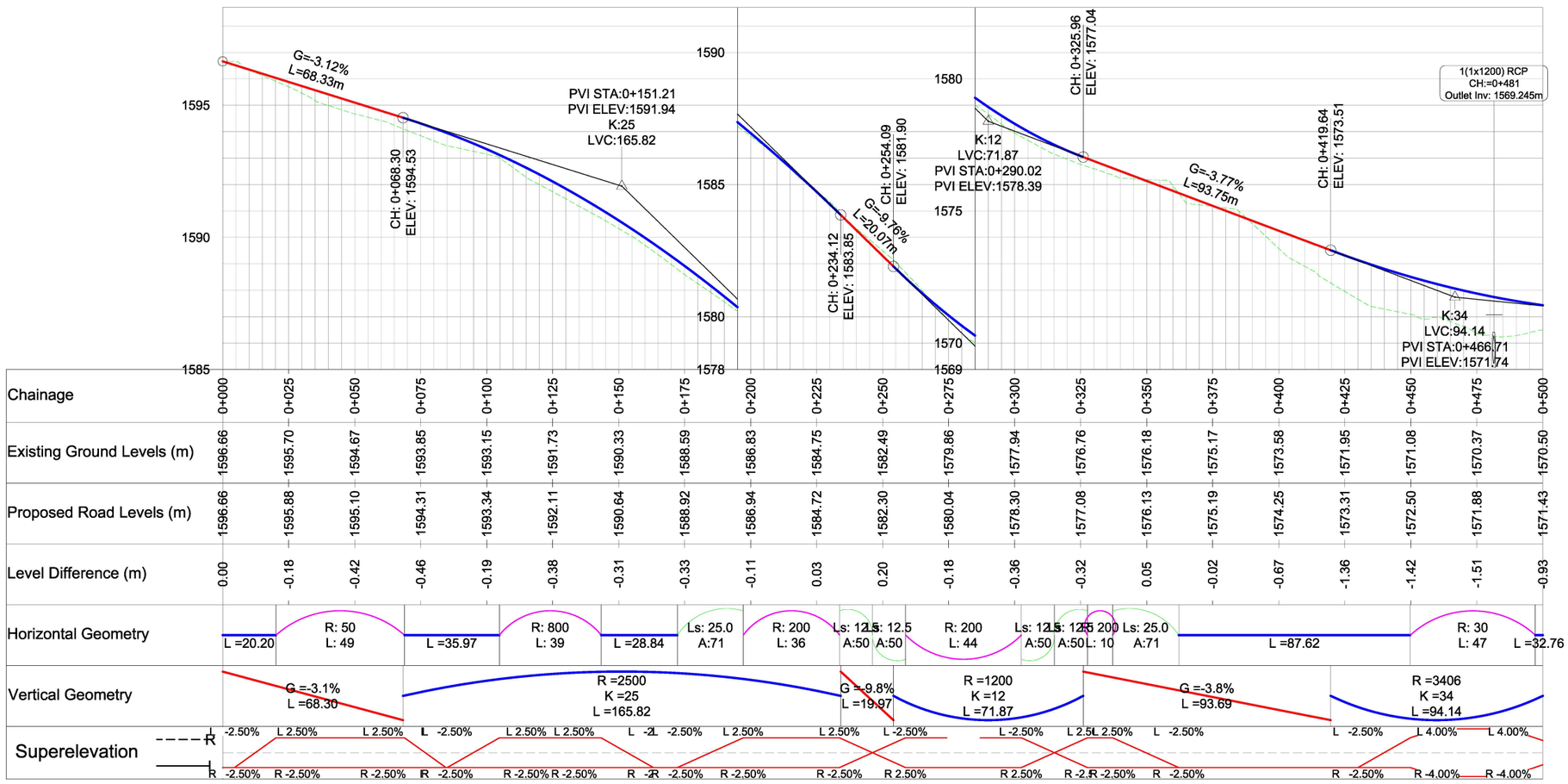

Chainage	Existing Ground Levels (m)	Proposed Road Levels (m)	Level Difference (m)
0+000	1596.66	1596.66	0.00
0+025	1595.70	1595.88	-0.18
0+050	1594.67	1595.10	-0.42
0+075	1593.85	1594.31	-0.46
0+100	1593.15	1593.34	-0.19
0+125	1591.73	1592.11	-0.38
0+150	1590.33	1590.64	-0.31
0+175	1588.59	1588.92	-0.33
0+200	1586.83	1586.94	-0.11
0+225	1584.75	1584.72	0.03
0+250	1582.49	1582.30	0.20
0+275	1579.86	1580.04	-0.18
0+300	1577.94	1578.30	-0.36
0+325	1576.76	1577.08	-0.32
0+350	1576.18	1576.13	0.05
0+375	1575.17	1575.19	-0.02
0+400	1573.58	1574.25	-0.67
0+425	1571.95	1573.31	-1.36
0+450	1571.08	1572.50	-1.42
0+475	1570.37	1571.88	-1.51
0+500	1570.50	1571.43	-0.93

CLIENT:

Kenya National Highways Authority
Quality Highways, Better Connections

KENYA NATIONAL HIGHWAY AUTHORITY
Barabara Plaza,
Off Airport South Road,
P. O. Box, 49712 - 00100,
NAIROBI.

KENYA URBAN ROADS AUTHORITY
Barabara Plaza,
Off Airport South Road,
P. O. Box, 49712 - 00100,
NAIROBI.

FINANCIER:

THE WORLD BANK

PROJECT:

HORN OF AFRICA GATEWAY DEVELOPMENT PROJECT (HOAGDP): -

Consultancy Services for the Design and Works Supervision for the Proposed Extension of Meru Bypass.

CONTRACT NO:

KeNHA/RD/CS/D/4205/2024

CONSULTANT:

egis

One Padmore Place 6th Floor,
George Padmore Road,
P. O. Box, 76672 - 00508,
NAIROBI.

DESIGN DETAILS

Action	Name	Date
Designed By:	S.A	October 2025
Drawn By:	J.M	October 2025
Checked By:	L.R	October 2025
Approved By:	S.O	October 2025

DRAWING REVISIONS

No.	Revision Details	Reviewed	Initials	Date	Approved
		By			
		Checked			
		By			
		Checked			
		By			
		Checked			
		By			
		Checked			
		By			
		Checked			

MERU BYPASS-HOSPITAL ROADS

PLAN AND PROFILE

ROAD: HOSPITAL ROAD-KIRAMBURINE JCT

CH 0+000 - CH 0+500

DRAWING SCALE:

H: 1:1000
V: 1:100

DRAWING NO:

P P F - HOS/KIR - 0 0 1
Doc. Type | Nature of Work | Number

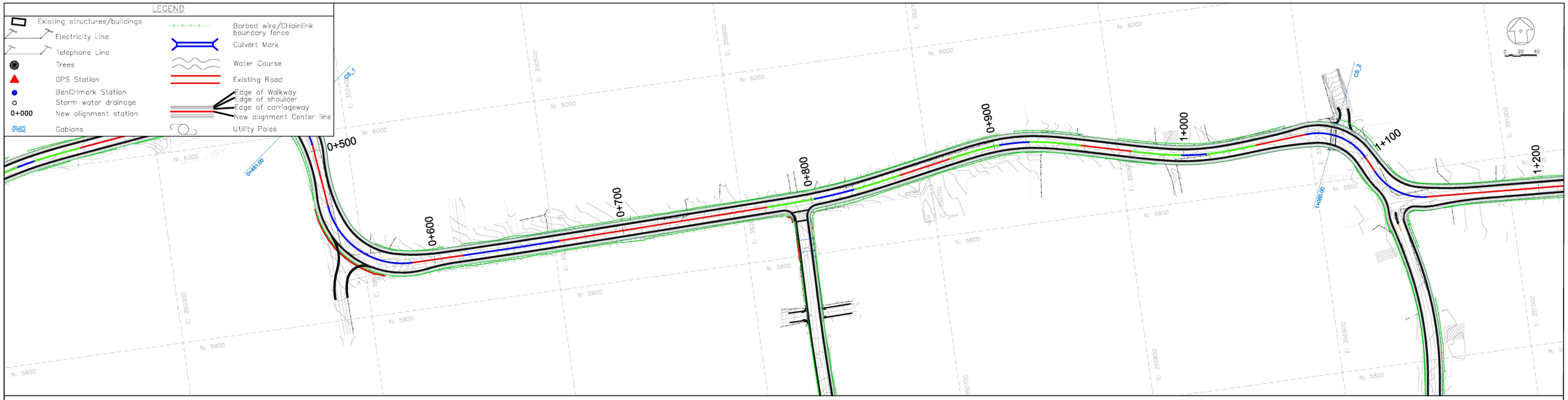

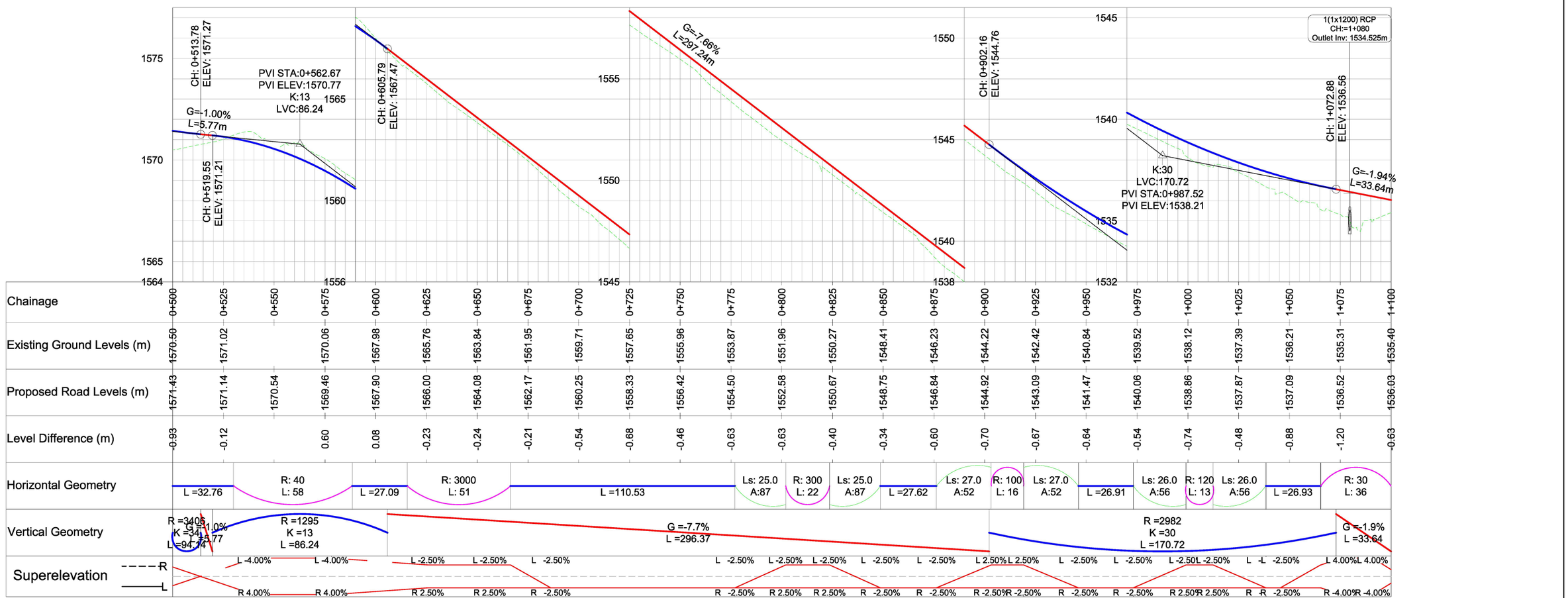

CLIENT:

KENYA NATIONAL HIGHWAY AUTHORITY
Barabara Plaza,
Off Airport South Road,
P. O. Box, 49712 - 00100,
NAIROBI.

KENYA URBAN ROADS AUTHORITY
Barabara Plaza,
Off Airport South Road,
P. O. Box, 49712 - 00100,
NAIROBI.

FINANCIER:

THE WORLD BANK

PROJECT:

HORN OF AFRICA GATEWAY DEVELOPMENT PROJECT (HOAGDP): -

Consultancy Services for the Design and Works Supervision for the Proposed Extension of Meru Bypass.

CONTRACT NO:

KeNHA/RD/CS/D/4205/2024

CONSULTANT:

egis

One Padmore Place 6th Floor,
George Padmore Road,
P. O. Box, 76672 - 00508,
NAIROBI.

DESIGN DETAILS

Action	Name	Date
Designed By:	S.A	October 2025
Drawn By:	J.M	October 2025
Checked By:	L.R	October 2025
Approved By:	S.O	October 2025

DRAWING REVISIONS

No.	Revision Details	Reviewed	Initials	Date	Approved
		By / Checked			

MERU BYPASS-HOSPITAL ROADS

PLAN AND PROFILE

ROAD: HOSPITAL ROAD-KIRAMBURINE JCT

CH 0+500 - CH 1+100

DRAWING SCALE:

H: 1:1000
V: 1:100

DRAWING NO:

P P F - HOS/KIR - 0 0 2
Doc. Type | Nature of Work | Number

LEGEND

- Existing structures/buildings
- Electricity Line
- Telephone Line
- Trees
- GPS Station
- BenCHmark Station
- Storm water drainage
- 0+000 New alignment station
- Gabions
- Barbed wire/CHainlink boundary fence
- Culvert Mark
- Water Course
- Existing Road
- Edge of Walkway
- Edge of shoulder
- Edge of carriageway
- New alignment Center line
- Utility Poles

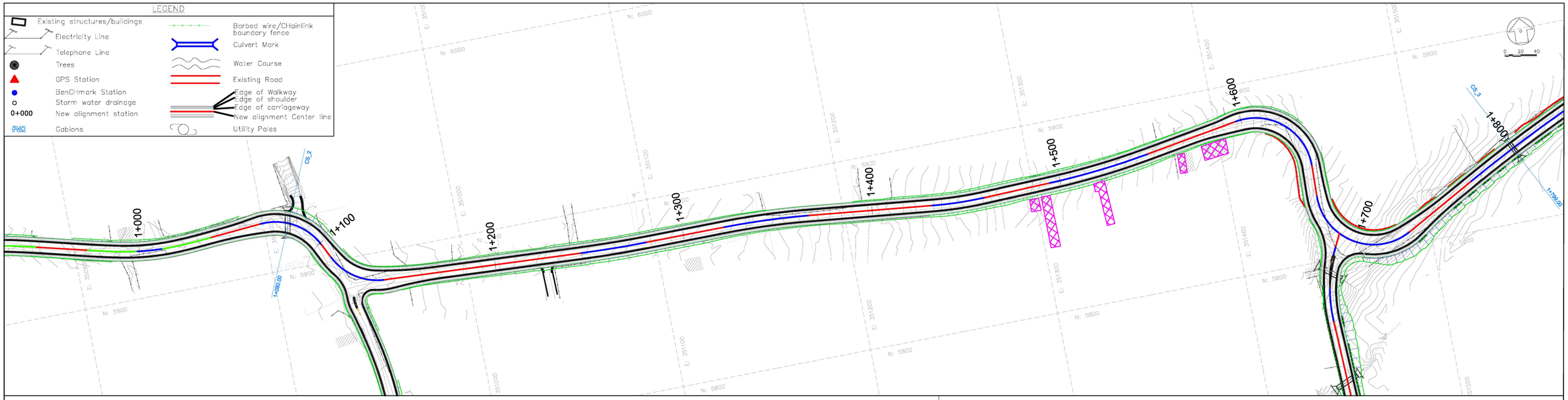

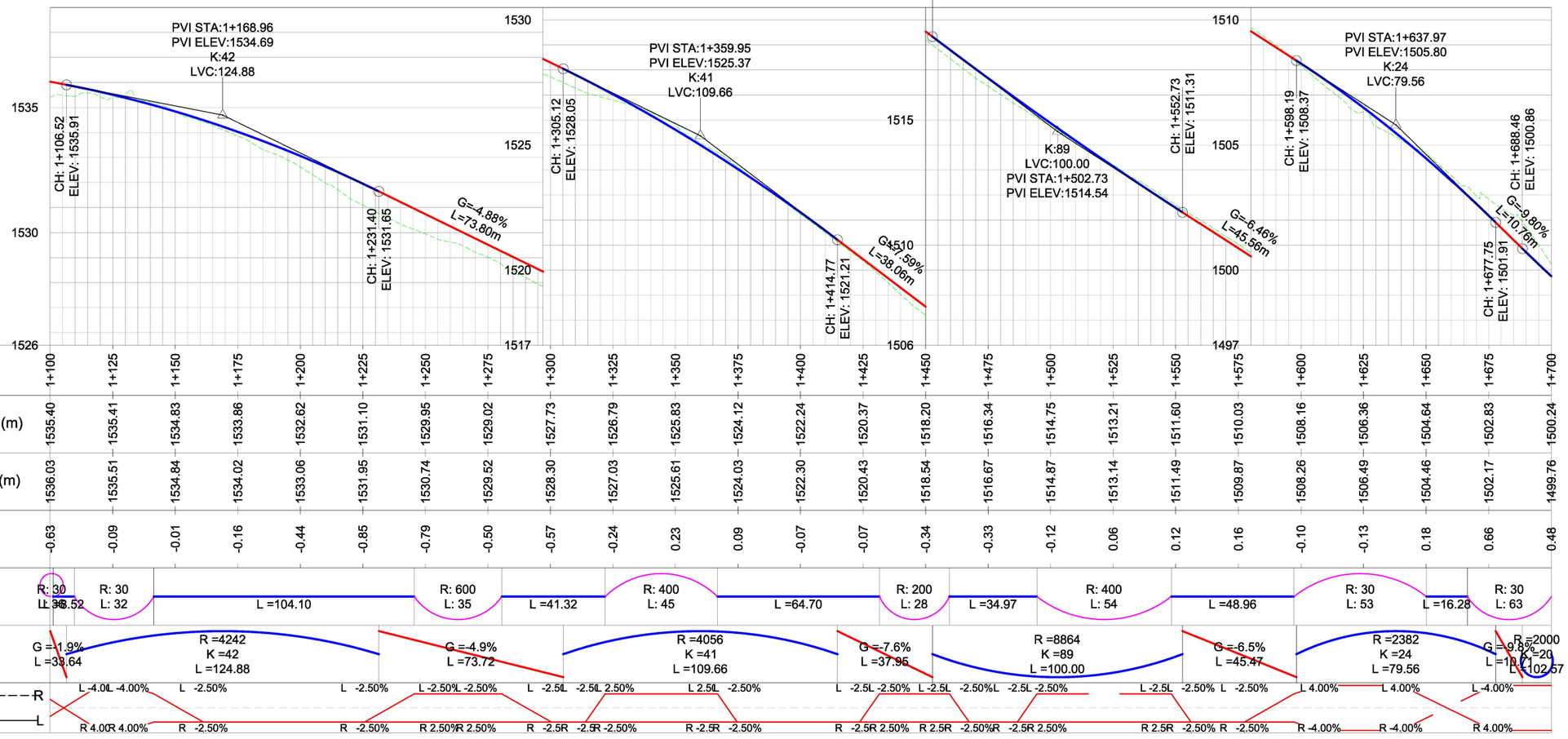

Chainage	1+100	1+125	1+150	1+175	1+200	1+225	1+250	1+275	1+300	1+325	1+350	1+375	1+400	1+425	1+450	1+475	1+500	1+525	1+550	1+575	1+600	1+625	1+650	1+675	1+700
Existing Ground Levels (m)	1535.40	1535.41	1534.83	1533.86	1532.62	1531.10	1529.95	1529.02	1527.73	1526.79	1525.83	1524.12	1522.24	1520.37	1518.20	1516.34	1514.75	1513.21	1511.60	1510.03	1508.16	1506.36	1504.64	1502.83	1500.24
Proposed Road Levels (m)	1536.03	1535.51	1534.84	1534.02	1533.06	1531.95	1530.74	1529.52	1528.30	1527.03	1525.61	1524.03	1522.30	1520.43	1518.54	1516.67	1514.87	1513.14	1511.49	1509.87	1508.26	1506.49	1504.46	1502.17	1499.76
Level Difference (m)	-0.63	-0.09	-0.01	-0.16	-0.44	-0.85	-0.79	-0.50	-0.57	-0.24	0.23	0.09	-0.07	-0.07	-0.34	-0.33	-0.12	0.06	0.12	0.16	-0.10	-0.13	0.18	0.66	0.48
Horizontal Geometry	R: 30 L: 36.52	R: 30 L: 32	L =104.10	R: 600 L: 35	L =41.32	R: 400 L: 45	L =64.70	R: 200 L: 28	L =34.97	R: 400 L: 54	L =48.96	R: 30 L: 53	L =16.28	R: 30 L: 63											
Vertical Geometry	G =-1.9% L =33.64	R =4242 K =42 L =124.88	G =-4.9% L =73.72	R =4056 K =41 L =109.66	G =-7.6% L =37.95	R =8864 K =89 L =100.00	G =-6.5% L =45.47	R =2382 K =24 L =79.56	G =-9.8% L =10.76	R =2000 K =20 L =102.57															
Superelevation R	L -4.00%	L -4.00%	L -2.50%	L -2.50%	L -2.50%	L -2.50%	L -2.50%	L -2.50%	L -2.50%	L 2.50%	L -2.50%	L -2.5%	L -2.50%	L -2.5%	L -2.50%	L -2.5%	L -2.50%	L -2.5%	L -2.50%	L -2.5%	L 4.00%	L 4.00%	L -4.00%		
Superelevation L	R 4.00%	R 4.00%	R -2.50%	R -2.50%	R 2.50%	R 2.50%	R -2.5%	R -2.5%	R -2.50%	R -2.5%	R -2.50%	R -2.5%	R 2.50%	R 2.5%	R -2.50%	R -2.5%	R 2.50%	R 2.5%	R -2.50%	R -2.5%	R -4.00%	R -4.00%	R 4.00%		

CLIENT:
Kenya National Highways Authority
Quality Highways, Better Connections
KENYA NATIONAL HIGHWAY AUTHORITY
Barabara Plaza,
Off Airport South Road,
P. O. Box, 49712 - 00100,
NAIROBI.

KENYA URBAN ROADS AUTHORITY
KENYA URBAN ROADS AUTHORITY
Barabara Plaza,
Off Airport South Road,
P. O. Box, 49712 - 00100,
NAIROBI.

FINANCIER:
THE WORLD BANK

PROJECT:
HORN OF AFRICA GATEWAY DEVELOPMENT PROJECT (HOAGDP): -
Consultancy Services for the Design and Works Supervision for the Proposed Extension of Meru Bypass.

CONTRACT NO:
KeNHA/RD/CS/D/4205/2024

CONSULTANT:
egis
One Padmore Place 6th Floor, George Padmore Road, P. O. Box, 76672 - 00508, NAIROBI.

DESIGN DETAILS

Action	Name	Date
Designed By:	S.A	October 2025
Drawn By:	J.M	October 2025
Checked By:	L.R	October 2025
Approved By:	S.O	October 2025

DRAWING REVISIONS

No.	Revision Details	Reviewed	Initials	Date	Approved
		By / Checked			

MERU BYPASS-HOSPITAL ROADS
PLAN AND PROFILE
ROAD: HOSPITAL ROAD-KIRAMBURINE JCT
CH 1+100 - CH 1+700

DRAWING SCALE:
H: 1:1000
V: 1:100

DRAWING NO:
P P F - HOS/KIR - 0 0 3
Doc. Type | Nature of Work | Number

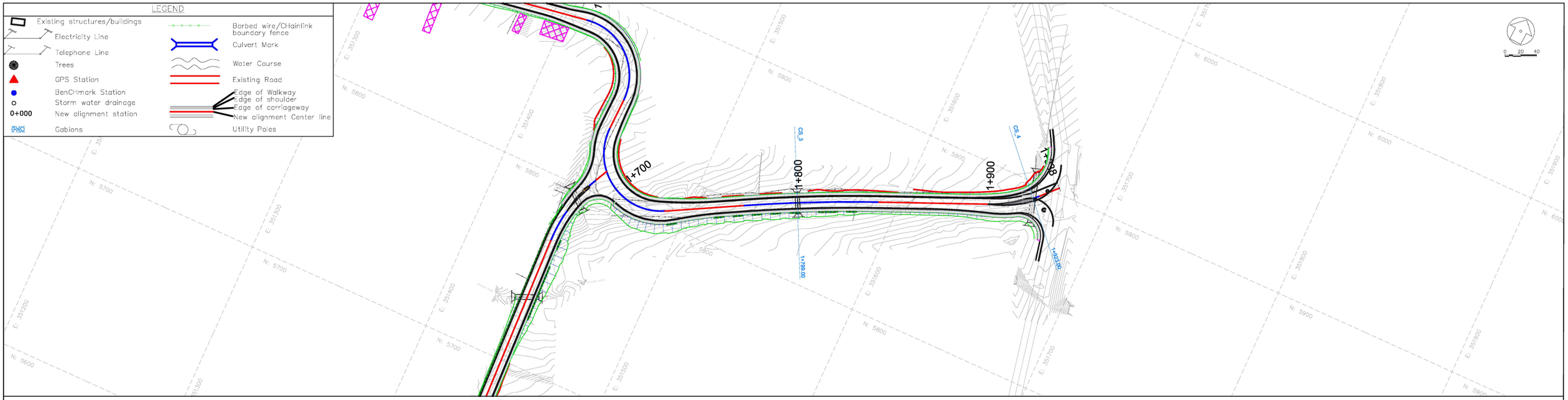

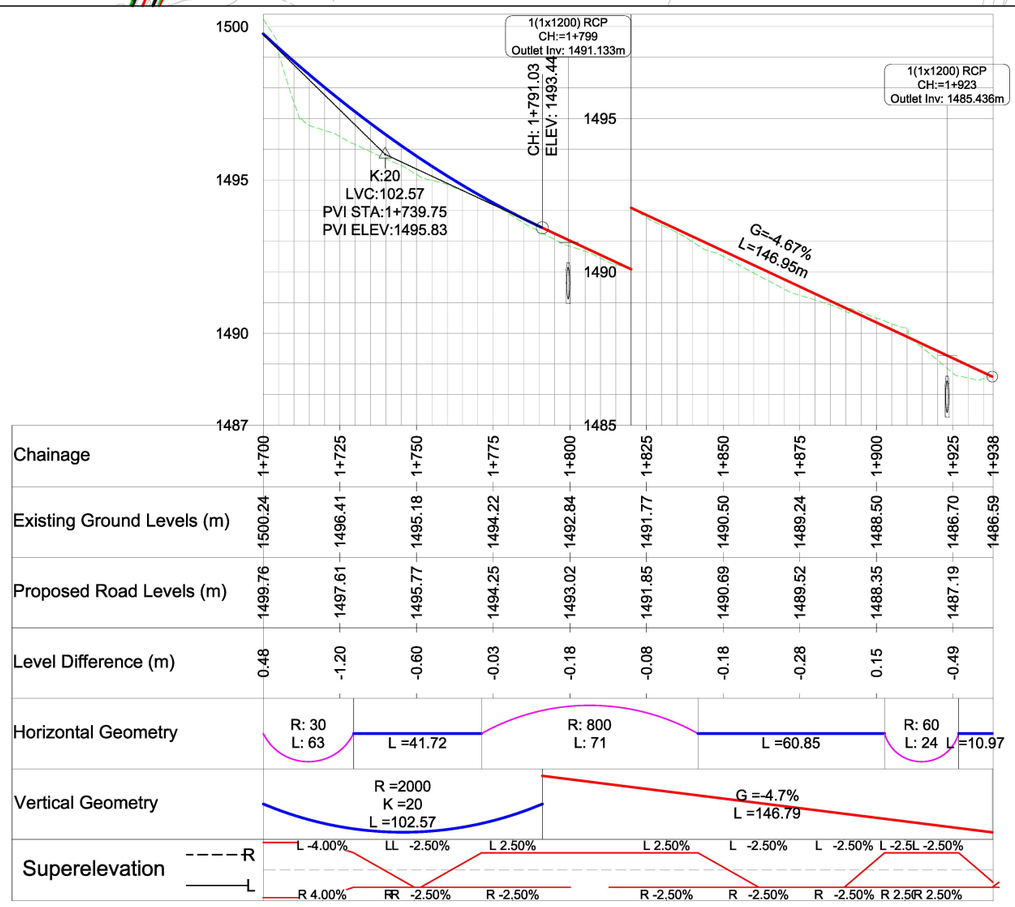

CLIENT:

KENYA NATIONAL HIGHWAY AUTHORITY
Barabara Plaza,
Off Airport South Road,
P. O. Box, 49712 - 00100,
NAIROBI.

KENYA URBAN ROADS AUTHORITY
Barabara Plaza,
Off Airport South Road,
P. O. Box, 49712 - 00100,
NAIROBI.

FINANCIER:

THE WORLD BANK

PROJECT:

HORN OF AFRICA GATEWAY DEVELOPMENT PROJECT (HOAGDP): -

Consultancy Services for the Design and Works Supervision for the Proposed Extension of Meru Bypass.

CONTRACT NO:

KeNHA/RD/CS/D/4205/2024

CONSULTANT:

One Padmore Place 6th Floor,
George Padmore Road,
P. O. Box, 76672 - 00508,
NAIROBI.

DESIGN DETAILS

Action	Name	Date
Designed By:	S.A	October 2025
Drawn By:	J.M	October 2025
Checked By:	L.R	October 2025
Approved By:	S.O	October 2025

DRAWING REVISIONS

No.	Revision Details	Reviewed	Initials	Date	Approved
		By			
		Checked			
		By			
		Checked			
		By			
		Checked			
		By			
		Checked			
		By			
		Checked			

MERU BYPASS-HOSPITAL ROADS

PLAN AND PROFILE

ROAD: HOSPITAL ROAD-KIRAMBURINE JCT

CH 1+700 - CH 1+938

DRAWING SCALE:

H: 1:1000
V: 1:100

DRAWING NO:

PPF- HOS/KIR -004

Doc. Type | Nature of Work | Number

3.2. LINK 1 – MERU BUS TERMINUS

PLANS AND PROFILES

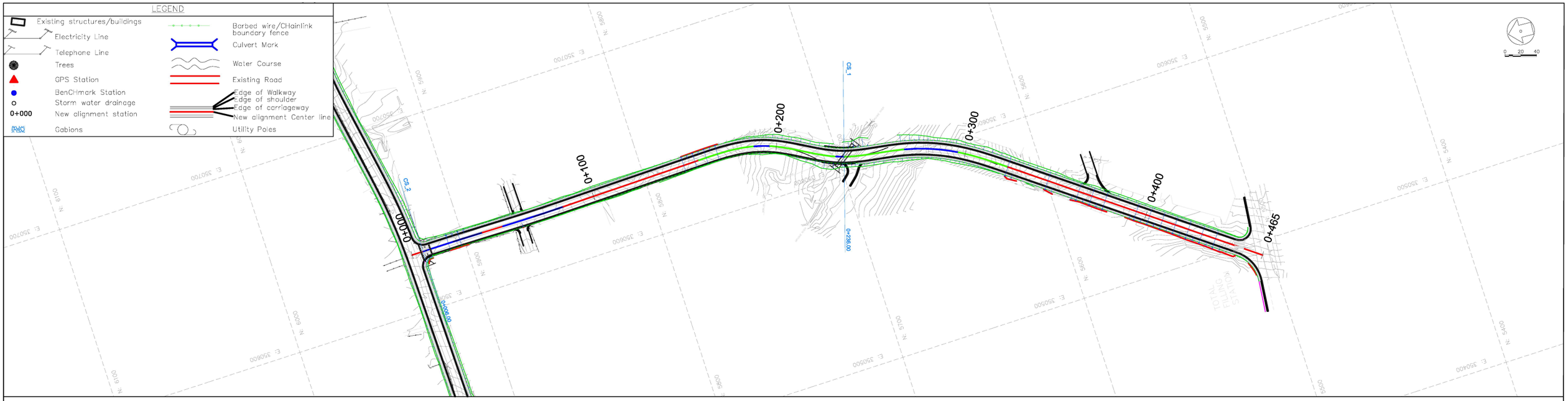

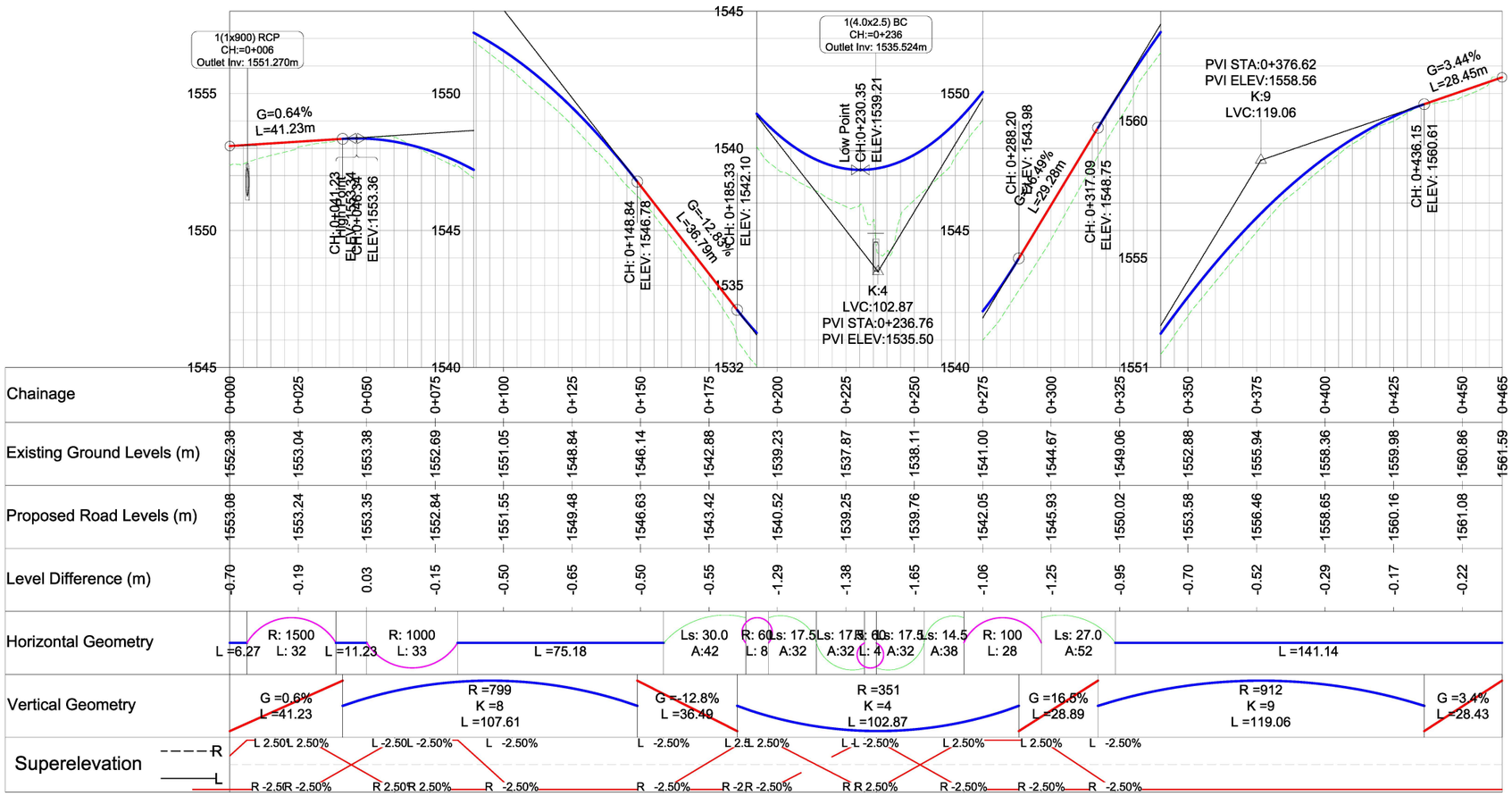

Chainage	Existing Ground Levels (m)	Proposed Road Levels (m)	Level Difference (m)
0+000	1552.38	1553.08	-0.70
0+025	1553.04	1553.24	-0.19
0+050	1553.38	1553.35	0.03
0+075	1552.69	1552.84	-0.15
0+100	1551.05	1551.55	-0.50
0+125	1548.84	1549.48	-0.65
0+150	1546.14	1546.63	-0.50
0+175	1542.88	1543.42	-0.55
0+200	1539.23	1540.52	-1.29
0+225	1537.87	1539.25	-1.38
0+250	1538.11	1539.76	-1.65
0+275	1541.00	1542.05	-1.06
0+300	1544.67	1545.93	-1.25
0+325	1549.06	1550.02	-0.95
0+350	1552.88	1553.58	-0.70
0+375	1555.94	1556.46	-0.52
0+400	1558.36	1558.65	-0.29
0+425	1559.98	1560.16	-0.17
0+450	1560.86	1561.08	-0.22
0+465	1561.59		

CLIENT:

KENYA NATIONAL HIGHWAY AUTHORITY
Barabara Plaza,
Off Airport South Road,
P. O. Box, 49712 - 00100,
NAIROBI.

KENYA URBAN ROADS AUTHORITY
Barabara Plaza,
Off Airport South Road,
P. O. Box, 49712 - 00100,
NAIROBI.

FINANCIER:

THE WORLD BANK

PROJECT:

HORN OF AFRICA GATEWAY DEVELOPMENT PROJECT (HOAGDP): -

Consultancy Services for the Design and Works Supervision for the Proposed Extension of Meru Bypass.

CONTRACT NO:

KeNHA/RD/CS/D/4205/2024

CONSULTANT:

egis

One Padmore Place 6th Floor,
George Padmore Road,
P. O. Box, 76672 - 00508,
NAIROBI.

DESIGN DETAILS

Action	Name	Date
Designed By:	S.A	August 2025
Drawn By:	J.M	August 2025
Checked By:	L.R	August 2025
Approved By:	S.O	August 2025

DRAWING REVISIONS

No.	Revision Details	Reviewed	Initials	Date	Approved
		By			
		Checked			
		By			
		Checked			
		By			
		Checked			
		By			
		Checked			
		By			
		Checked			

MERU BYPASS-HOSPITAL ROADS

PLAN AND PROFILE

ROAD: LINK 1 - MERU BUS TERMINUS

CH 0+000 - CH 0+465

DRAWING SCALE:

H: 1:1000
V: 1:100

DRAWING NO:

P P F - M B T - 0 0 1

Doc. Type | Nature of Work | Number

3.3. LINK 2 - GAKOROMONE MARKET

PLANS AND PROFILES

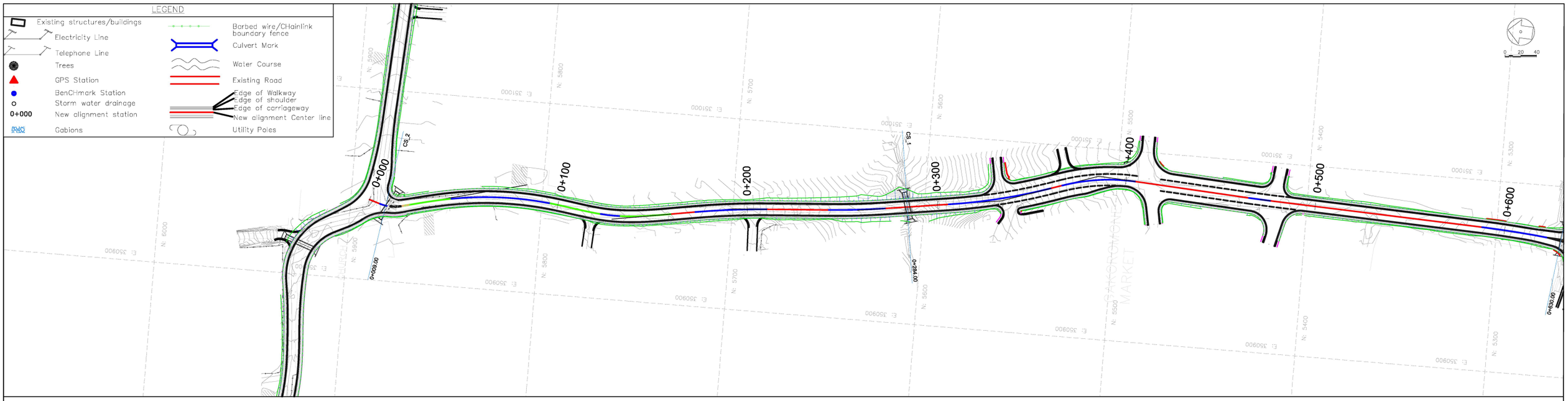

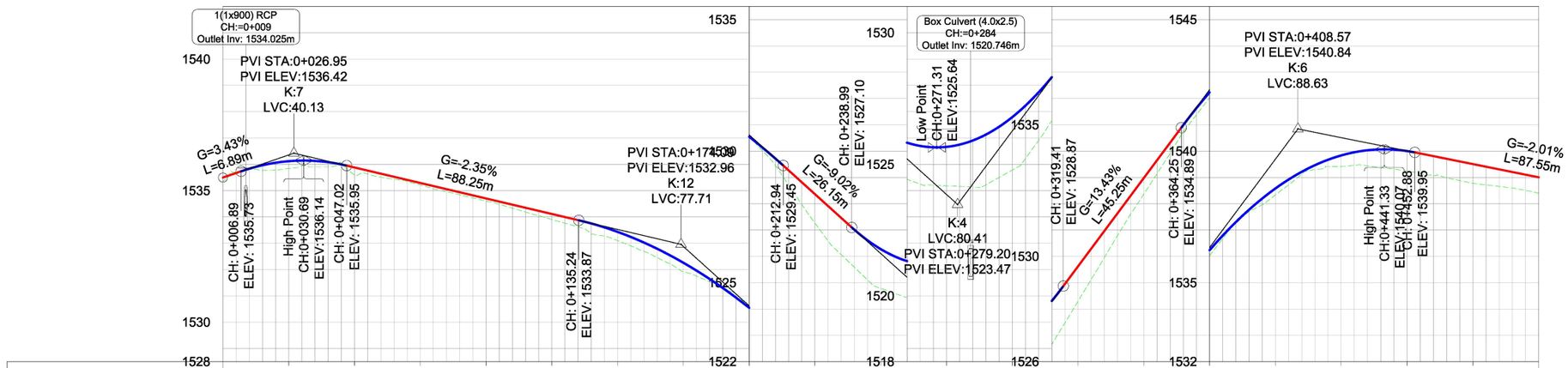

Chainage	0+000	0+025	0+050	0+075	0+100	0+125	0+150	0+175	0+200	0+225	0+250	0+275	0+300	0+325	0+350	0+375	0+400	0+425	0+450	0+475	0+500
Existing Ground Levels (m)	1535.35	1535.84	1535.59	1535.21	1534.60	1533.90	1533.10	1531.91	1530.55	1527.26	1524.79	1524.18	1524.78	1528.30	1532.36	1536.03	1538.33	1539.42	1539.24	1538.78	1538.40
Proposed Road Levels (m)	1535.50	1536.12	1535.88	1535.29	1534.70	1534.11	1533.43	1532.26	1530.55	1528.36	1526.28	1525.66	1526.79	1529.62	1532.98	1536.24	1538.58	1539.83	1540.00	1539.51	1539.00
Level Difference (m)	-0.15	-0.28	-0.29	-0.08	-0.10	-0.21	-0.33	-0.34	0.00	-1.10	-1.49	-1.48	-2.01	-1.33	-0.61	-0.21	-0.25	-0.41	-0.76	-0.73	-0.60
Horizontal Geometry	R: 20 L =5.92	Ls: 25.0 A:67	R: 180 L: 52	Ls: 12 A:47	Ls: 14 A:38	R: 100 L: 10	Ls: 27.0 A:52	L =12.38	R: 400 L: 38	L =32.05	R: 400 L: 30	L =32.86	R: 300 L: 55	L =5.68	R: 100 L: 39	L =59.63	R: 600 L: 12	L =111.33			
Vertical Geometry	G =3.4% L =6.89	R =693 K =7 L =40.13	G =-2.4% L =88.22	R =1165 K =12 L =77.71	G =-9.0% L =26.05	R =358 K =4 L =80.41	G =13.4% L =44.85	R =574 K =6 L =88.63	G =-2.0% L =87.53												
Superelevation	L -2.50%	R -2.50%	L 2.50%	L -2.50%	R -2.50%	L 2.50%	R -2.50%	L -2.50%	R 2.50%	L -2.50%	R -2.50%	L 2.50%	R -2.50%	L -2.50%	R 2.50%	L -2.50%	R -2.50%	L 2.50%	R -2.50%	L -2.50%	R -2.50%

CLIENT:

KENYA NATIONAL HIGHWAY AUTHORITY
Barabara Plaza,
Off Airport South Road,
P. O. Box, 49712 - 00100,
NAIROBI.

KENYA URBAN ROADS AUTHORITY
Barabara Plaza,
Off Airport South Road,
P. O. Box, 49712 - 00100,
NAIROBI.

FINANCIER:

THE WORLD BANK

PROJECT:

HORN OF AFRICA GATEWAY DEVELOPMENT PROJECT (HOAGDP): -

Consultancy Services for the Design and Works Supervision for the Proposed Extension of Meru Bypass.

CONTRACT NO:

KeNHA/RD/CS/D/4205/2024

CONSULTANT:

egis

One Padmore Place 6th Floor,
George Padmore Road,
P. O. Box, 76672 - 00508,
NAIROBI.

DESIGN DETAILS

Action	Name	Date
Designed By:	S.A	October 2025
Drawn By:	J.M	October 2025
Checked By:	L.R	October 2025
Approved By:	S.O	October 2025

DRAWING REVISIONS

No.	Revision Details	Reviewed	Initials	Date	Approved
		By / Checked			
		By / Checked			
		By / Checked			
		By / Checked			
		By / Checked			
		By / Checked			

MERU BYPASS-HOSPITAL ROADS

PLAN AND PROFILE

ROAD: LINK 2 - GAKOROMONE MARKET

CH 0+000 - CH 0+500

DRAWING SCALE:

H: 1:1000
V: 1:100

DRAWING NO:

PPF - GAKMT - 001
Doc. Type | Nature of Work | Number

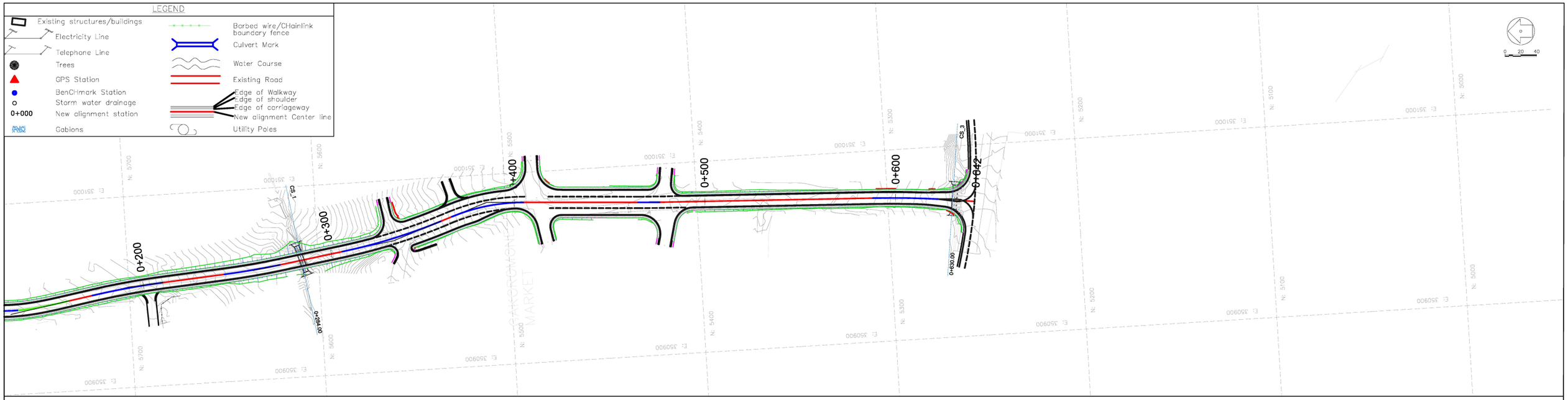

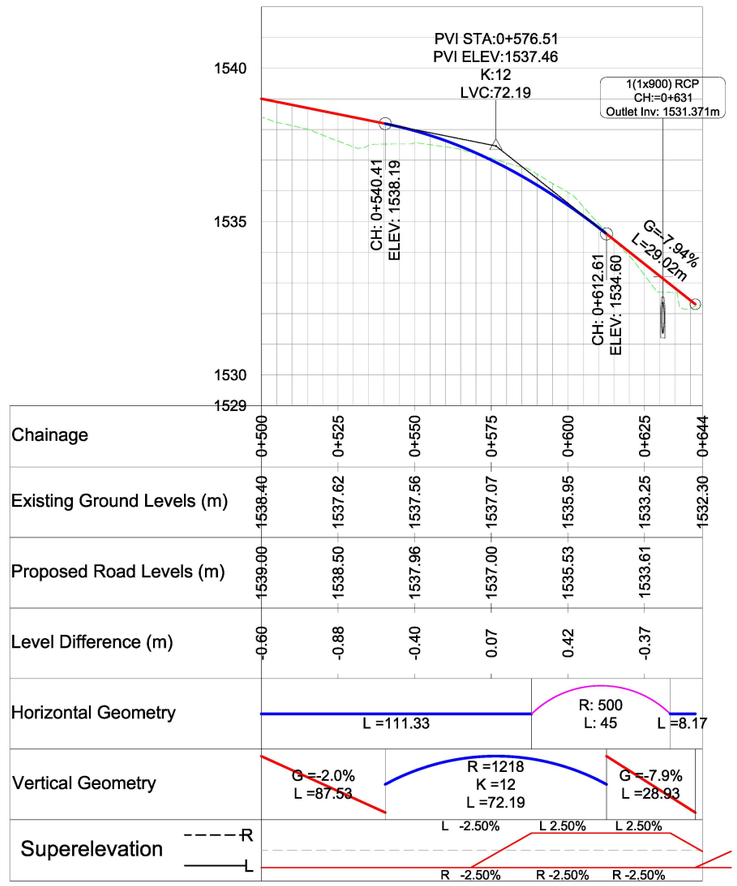

CLIENT:

KENYA NATIONAL HIGHWAY AUTHORITY
Barabara Plaza,
Off Airport South Road,
P. O. Box, 49712 - 00100,
NAIROBI.

KENYA URBAN ROADS AUTHORITY
Barabara Plaza,
Off Airport South Road,
P. O. Box, 49712 - 00100,
NAIROBI.

FINANCIER:

THE WORLD BANK

PROJECT:

HORN OF AFRICA GATEWAY DEVELOPMENT PROJECT (HOAGDP): -

Consultancy Services for the Design and Works Supervision for the Proposed Extension of Meru Bypass.

CONTRACT NO:

KeNHA/RD/CS/D/4205/2024

CONSULTANT:

One Padmore Place 6th Floor,
George Padmore Road,
P. O. Box, 76672 - 00508,
NAIROBI.

DESIGN DETAILS

Action	Name	Date
Designed By:	S.A	October 2025
Drawn By:	J.M	October 2025
Checked By:	L.R	October 2025
Approved By:	S.O	October 2025

DRAWING REVISIONS

No.	Revision Details	Reviewed	Initials	Date	Approved
		By			
		Checked			
		By			
		Checked			
		By			
		Checked			
		By			
		Checked			
		By			
		Checked			

MERU BYPASS-HOSPITAL ROADS

PLAN AND PROFILE

ROAD: LINK 2 - GAKOROMONE MARKET

CH 0+500 - CH 0+642

DRAWING SCALE:

H: 1:1000
V: 1:100

DRAWING NO:

PPF - GAKMT - 002
Doc. Type | Nature of Work | Number

3.4. LINK 3 – MEWAS JCT

PLANS AND PROFILES

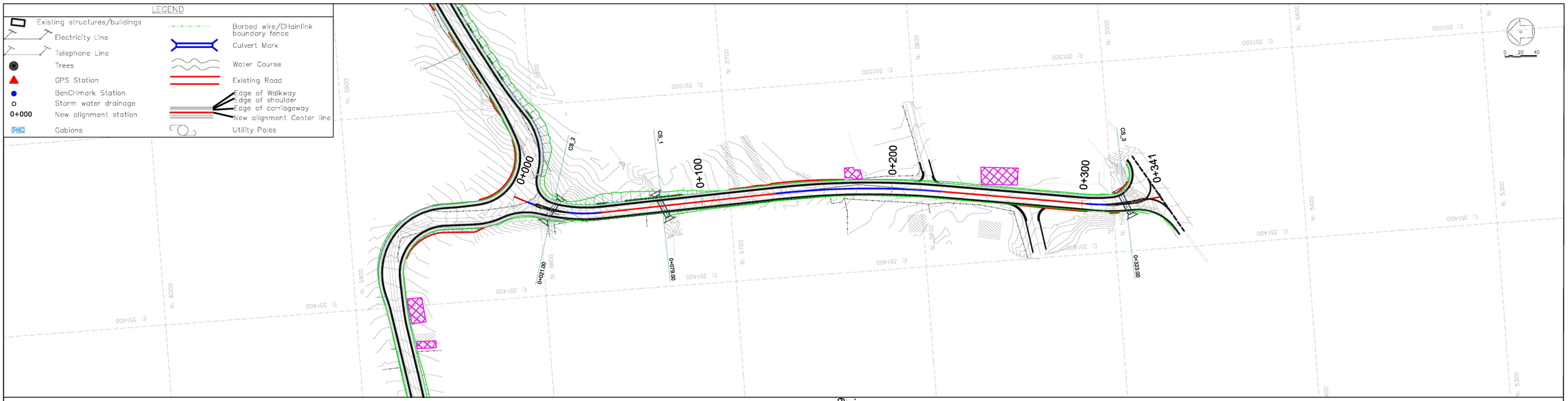

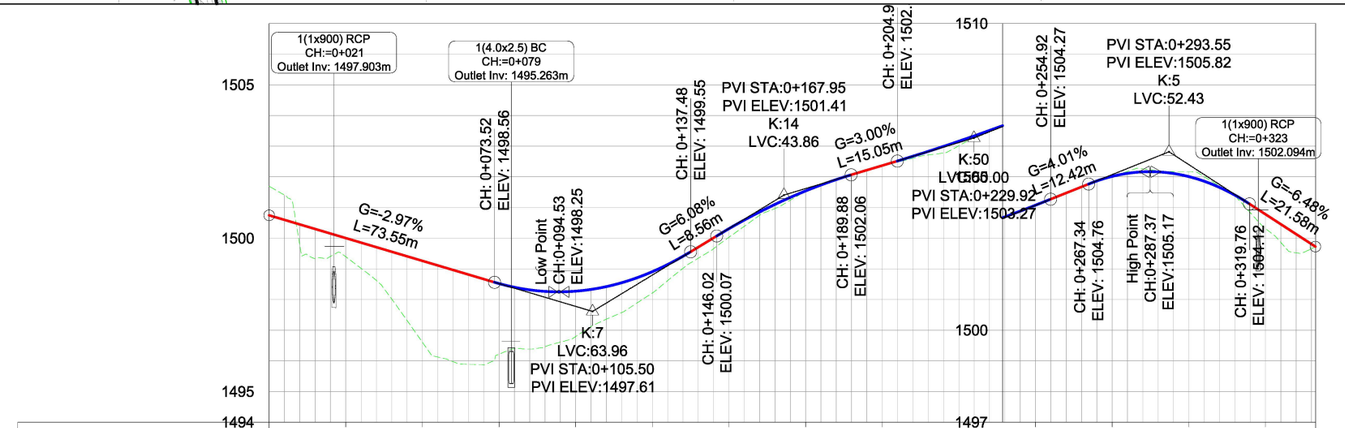

Chainage	0+000	0+025	0+050	0+075	0+100	0+125	0+150	0+175	0+200	0+225	0+250	0+275	0+300	0+325	0+341
Existing Ground Levels (m)	1501.69	1499.39	1496.61	1496.22	1496.79	1498.21	1500.03	1501.52	1502.35	1503.01	1504.05	1505.01	1505.16	1503.31	1502.72
Proposed Road Levels (m)		1500.00	1499.26	1498.52	1498.27	1498.91	1500.31	1501.54	1502.37	1503.16	1504.07	1505.01	1505.01	1503.78	
Level Difference (m)		-0.61	-2.65	-2.30	-1.48	-0.70	-0.28	-0.02	-0.02	-0.14	-0.02	0.00	0.16	-0.46	
Horizontal Geometry	L =7.62	R: 80 L: 39		L =92.31			R: 450 L: 87			L =76.55			R: 100 L: 28	L =10.46	
Vertical Geometry	G =-3.0% L =73.52			R =707 K =7 L =63.96		G =6.1% L =8.54	R =1427 K =14 L =43.86	G =3.0% L =15.05		R =4969 K =50 L =50.00	G =4.0% L =12.41		R =500 K =5 L =52.43	G =-6.5% L =21.53	
Superelevation	L -2.50%	L -2.50%	-2.50%			L -2.50%	2.50%			L 2.50%	-2.50%		L -2.50%	L -2.50%	-2.50%
R	R 2.50%	R 2.50%	R -2.50%			R -2.50%	-2.50%			R -2.50%	-2.50%		R -2.50%	R 2.50%	R -2.50%

CLIENT:
KENYA NATIONAL HIGHWAY AUTHORITY
Barabara Plaza,
Off Airport South Road,
P. O. Box, 49712 - 00100,
NAIROBI.

KENYA URBAN ROADS AUTHORITY
Barabara Plaza,
Off Airport South Road,
P. O. Box, 49712 - 00100,
NAIROBI.

FINANCIER:
THE WORLD BANK

PROJECT:
HORN OF AFRICA GATEWAY DEVELOPMENT PROJECT (HOAGDP): -
Consultancy Services for the Design and Works Supervision for the Proposed Extension of Meru Bypass.

CONTRACT NO:
KeNHA/RD/CS/D/4205/2024

CONSULTANT:
egis
One Padmore Place 6th Floor,
George Padmore Road,
P. O. Box, 76672 - 00508,
NAIROBI.

DESIGN DETAILS

Action	Name	Date
Designed By:	S.A	August 2025
Drawn By:	J.M	August 2025
Checked By:	L.R	August 2025
Approved By:	S.O	August 2025

DRAWING REVISIONS

No.	Revision Details	Reviewed	Initials	Date	Approved
		By			
		Checked			
		By			
		Checked			
		By			
		Checked			
		By			
		Checked			
		By			
		Checked			

MERU BYPASS-HOSPITAL ROADS
PLAN AND PROFILE
ROAD: LINK 3 - MEWAS JCT
CH 0+000 - CH 0+341

DRAWING SCALE:
H: 1:1000
V: 1:100

DRAWING NO:
PPF-MWS-001
Doc. Type | Nature of Work | Number

MERU BY-PASS ROADS

4.WESTERN BYPASS-MATE ROADS

PLANS AND PROFILES

4.1. WESTERN BYPASS-LINK ROAD

PLANS AND PROFILES

LEGEND

- Existing structures/buildings
- Electricity Line
- Telephone Line
- Trees
- GPS Station
- BenCHmark Station
- Storm water drainage
- 0+000 New alignment station
- Gabions
- Barbed wire/CHainlink boundary fence
- Culvert Mark
- Water Course
- Existing Road
- Edge of Walkway
- Edge of shoulder
- Edge of carriageway
- New alignment Center line
- Utility Poles

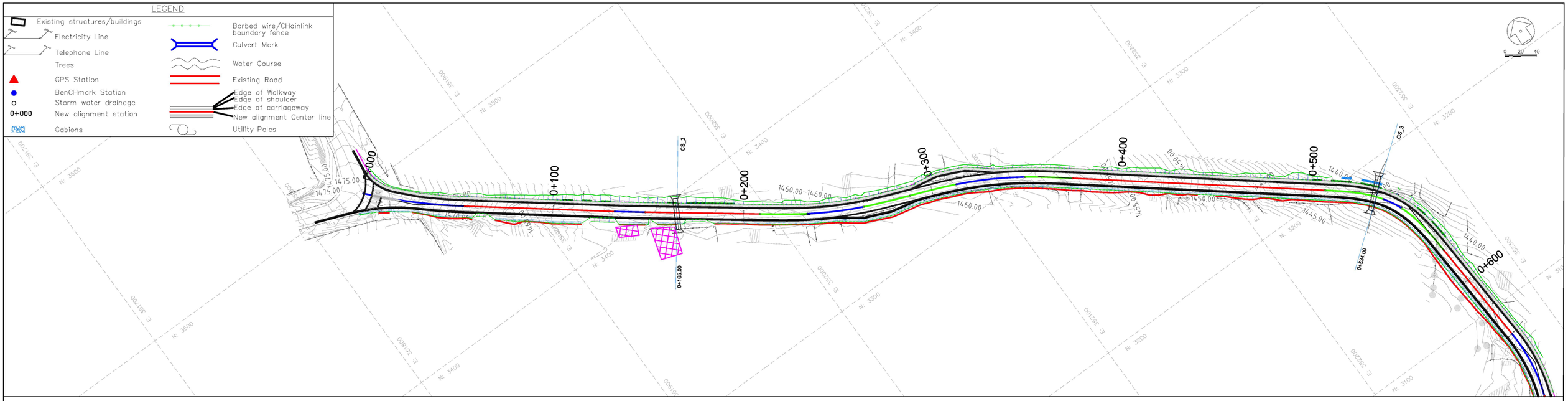

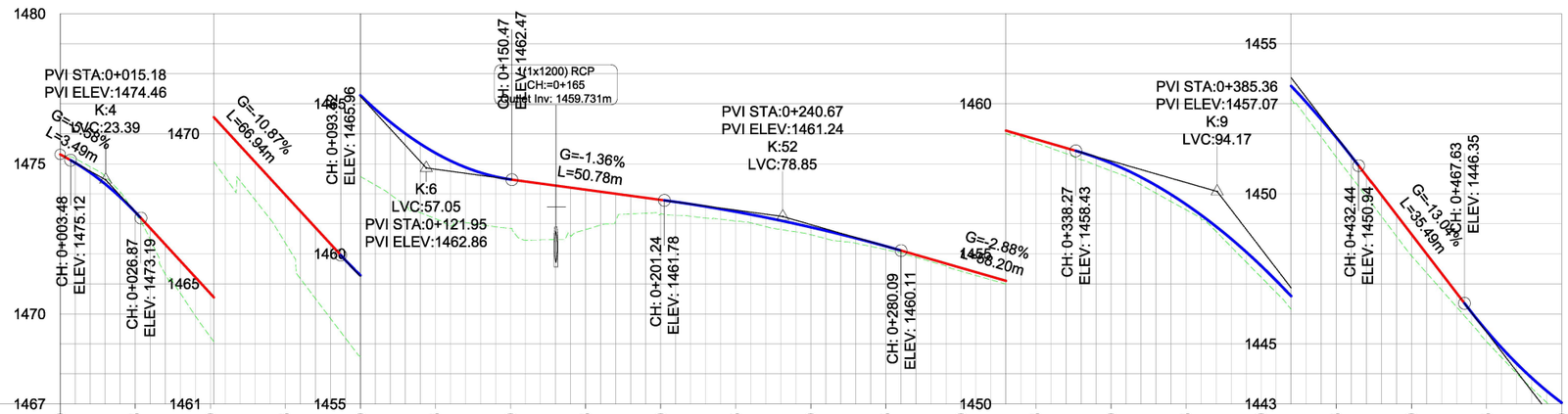

Chainage	0+000	0+025	0+050	0+075	0+100	0+125	0+150	0+175	0+200	0+225	0+250	0+275	0+300	0+325	0+350	0+375	0+400	0+425	0+450	0+475	0+500
Existing Ground Levels (m)	1475.31	1473.35	1469.24	1466.36	1462.58	1461.17	1460.84	1460.81	1461.32	1461.09	1460.64	1460.14	1459.42	1458.69	1457.76	1456.47	1454.22	1451.22	1447.93	1445.08	1442.55
Proposed Road Levels (m)	1475.31	1473.39	1470.68	1467.96	1465.28	1463.36	1462.48	1462.14	1461.80	1461.40	1460.89	1460.25	1459.53	1458.81	1458.02	1456.65	1454.60	1451.88	1448.65	1445.44	1443.04
Level Difference (m)	0.00	-0.04	-1.44	-1.60	-2.70	-2.19	-1.63	-1.33	-0.47	-0.31	-0.25	-0.11	-0.11	-0.13	-0.26	-0.18	-0.38	-0.65	-0.72	-0.36	-0.49
Horizontal Geometry	L =0.03	R: 300 L: 54	L =78.81		R: 800 L: 16	L =60.05			Ls: 25.0 A:71	R: 200 L: 30	Ls: 25.0 A:71	Ls: 25.0 A:71	R: 200 L: 36	Ls: 25.0 A:71	L =132.39						
Vertical Geometry	G =-5.6%	R =442 K =4 L =23.39	G =-10.9% L =66.55		R =600 K =6 L =57.05	G =-1.4% L =50.77			R =5192 K =52 L =78.85			G =-2.9% L =58.18		R =927 K =9 L =94.17			G =-13.0% L =35.19	R =574 K =6 L =84.90			
Superelevation	L -2.50%	L -2.5	L -2.50%		L -2.50%	L -2.50%	L -2.50%		L -2.50%	L -2.50%	L -2.50%		L 2.50%	L 2.50%	L -2.50%						
	R 2.50%	R 2.5	R -2.50%		R -2.50%	R 2.50%	R -2.50%		R -2.50%	R 2.50%	R 2.50%		R -2.50%	R -2.50%	R -2.50%						

CLIENT:

Kenya National Highways Authority
Quality Highways, Better Connections

KENYA NATIONAL HIGHWAY AUTHORITY
Barabara Plaza,
Off Airport South Road,
P. O. Box, 49712 - 00100,
NAIROBI.

KENYA URBAN ROADS AUTHORITY
Barabara Plaza,
Off Airport South Road,
P. O. Box, 49712 - 00100,
NAIROBI.

FINANCIER:

THE WORLD BANK

PROJECT:

HORN OF AFRICA GATEWAY DEVELOPMENT PROJECT (HOAGDP): -

Consultancy Services for the Design and Works Supervision for the Proposed Extension of Meru Bypass.

CONTRACT NO:

KeNHA/RD/CS/D/4205/2024

CONSULTANT:

egis

One Padmore Place 6th Floor,
George Padmore Road,
P. O. Box, 76672 - 00508,
NAIROBI.

DESIGN DETAILS

Action	Name	Date
Designed By:	S.A	October 2025
Drawn By:	J.M	October 2025
Checked By:	L.R	October 2025
Approved By:	S.O	October 2025

DRAWING REVISIONS

No.	Revision Details	Reviewed	Initials	Date	Approved
		By			
		Checked			
		By			
		Checked			
		By			
		Checked			
		By			
		Checked			
		By			
		Checked			

MERU BYPASS-WESTERN BYPASS ROADS

PLAN AND PROFILE

ROAD: WESTERN BYPASS-LINK ROAD

CH 0+000 - CH 0+500

DRAWING SCALE:

H: 1:1000
V: 1:100

DRAWING NO:

P P F - W B L - 0 0 1

Doc. Type | Nature of Work | Number

LEGEND

- Existing structures/buildings
- Electricity Line
- Telephone Line
- Trees
- GPS Station
- BenCHmark Station
- Storm water drainage
- 0+000 New alignment station
- Gabions
- Barbed wire/CHainlink boundary fence
- Culvert Mark
- Water Course
- Existing Road
- Edge of Walkway
- Edge of shoulder
- Edge of carriageway
- New alignment Center line
- Utility Poles

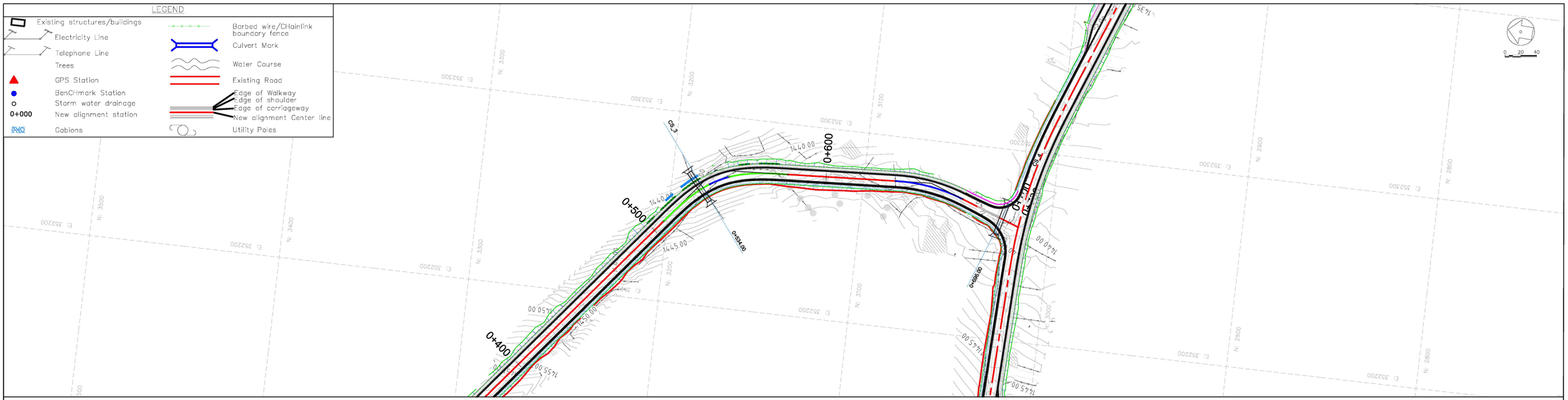

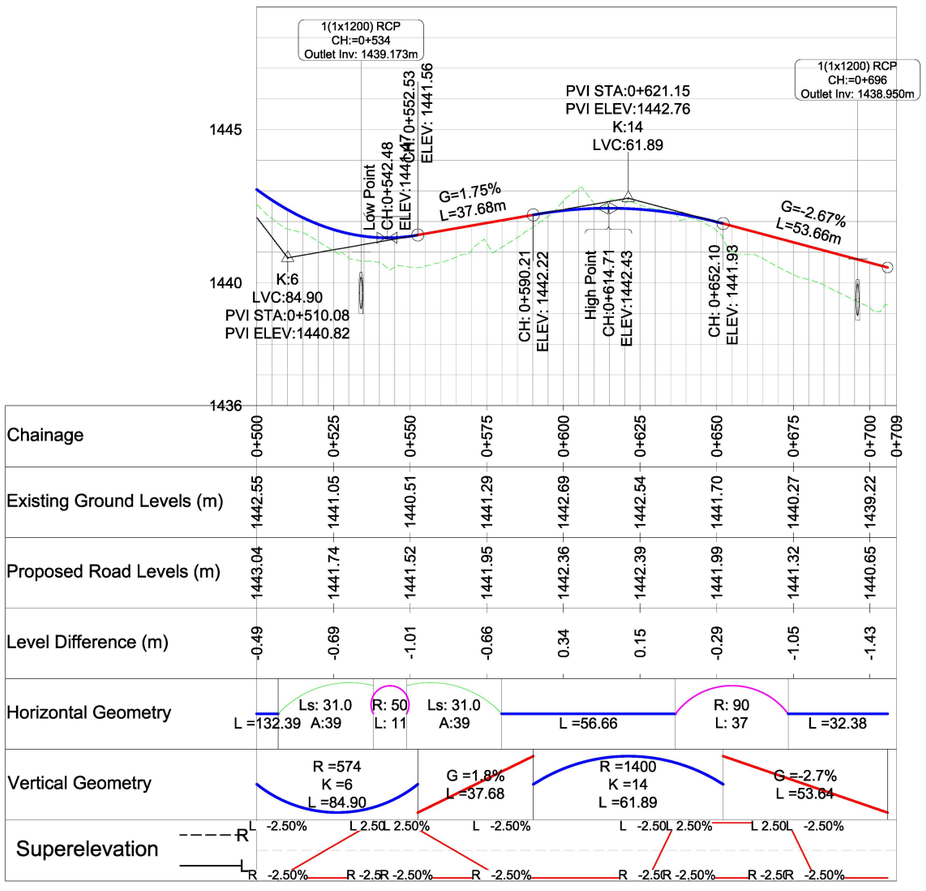

CLIENT:

KENYA NATIONAL HIGHWAY AUTHORITY
Barabara Plaza,
Off Airport South Road,
P. O. Box, 49712 - 00100,
NAIROBI.

KENYA URBAN ROADS AUTHORITY
Barabara Plaza,
Off Airport South Road,
P. O. Box, 49712 - 00100,
NAIROBI.

FINANCIER:

THE WORLD BANK

PROJECT:

HORN OF AFRICA GATEWAY DEVELOPMENT PROJECT (HOAGDP): -

Consultancy Services for the Design and Works Supervision for the Proposed Extension of Meru Bypass.

CONTRACT NO:

KeNHA/RD/CS/D/4205/2024

CONSULTANT:

egis

One Padmore Place 6th Floor,
George Padmore Road,
P. O. Box, 76672 - 00508,
NAIROBI.

DESIGN DETAILS

Action	Name	Date
Designed By:	S.A	October 2025
Drawn By:	J.M	October 2025
Checked By:	L.R	October 2025
Approved By:	S.O	October 2025

DRAWING REVISIONS

No.	Revision Details	Reviewed	Initials	Date	Approved
		By			
		Checked			
		By			
		Checked			
		By			
		Checked			
		By			
		Checked			
		By			
		Checked			

MERU BYPASS-WESTERN BYPASS ROADS

PLAN AND PROFILE

ROAD: WESTERN BYPASS-LINK ROAD

CH 0+500 - CH 0+706

DRAWING SCALE:

H: 1:1000
V: 1:100

DRAWING NO:

PPF-WBL-002

Doc. Type | Nature of Work | Number

4.2. GIKUMENE JCT-MATE ROAD

PLANS AND PROFILES

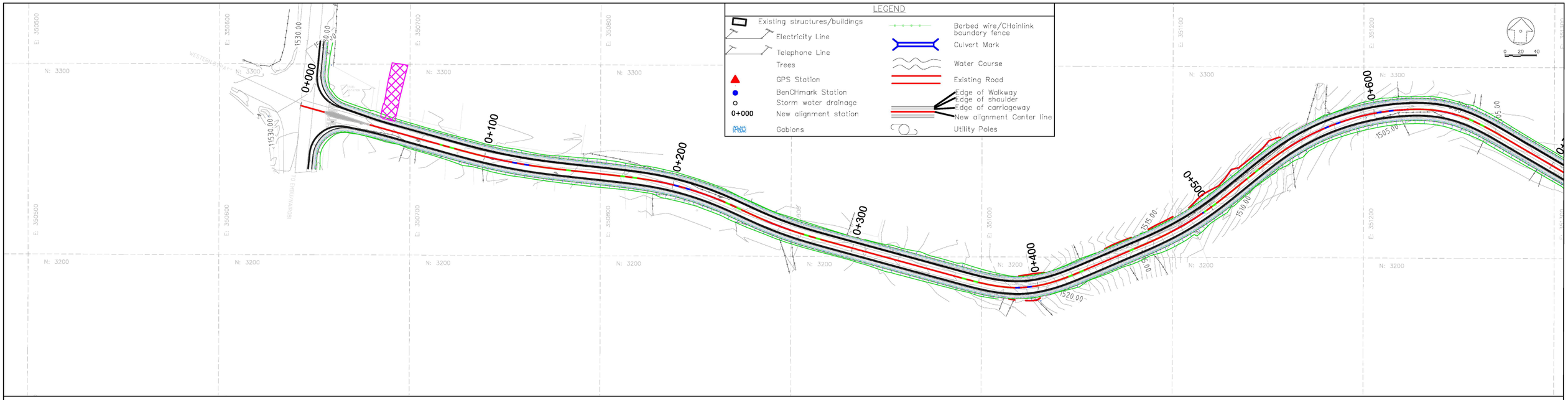

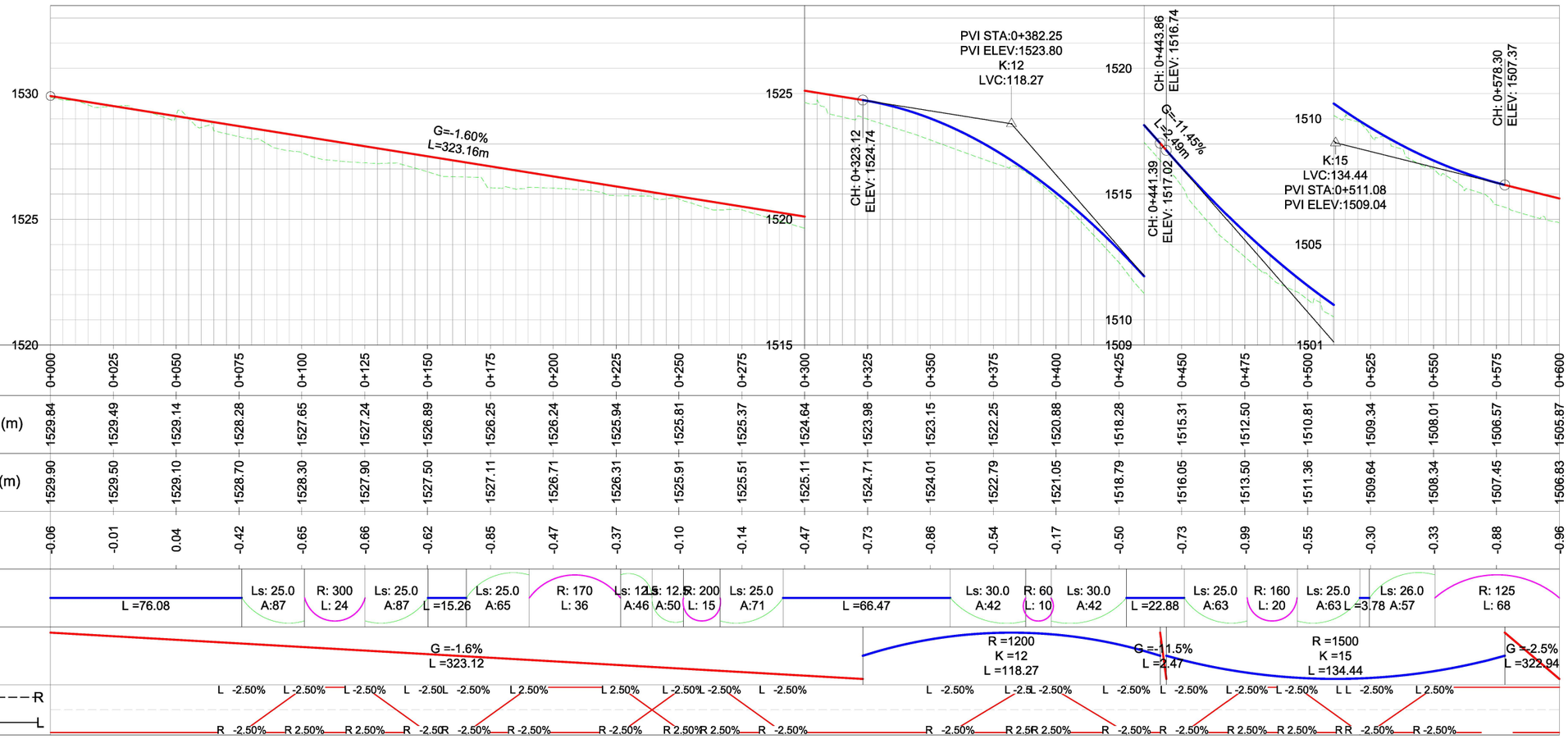

CLIENT:

KENYA NATIONAL HIGHWAY AUTHORITY
Barabara Plaza,
Off Airport South Road,
P. O. Box, 49712 - 00100,
NAIROBI.

KENYA URBAN ROADS AUTHORITY
Barabara Plaza,
Off Airport South Road,
P. O. Box, 49712 - 00100,
NAIROBI.

FINANCIER:

THE WORLD BANK

PROJECT:

HORN OF AFRICA GATEWAY DEVELOPMENT PROJECT (HOAGDP): -

Consultancy Services for the Design and Works Supervision for the Proposed Extension of Meru Bypass.

CONTRACT NO:

KeNHA/RD/CS/D/4205/2024

CONSULTANT:

egis

One Padmore Place 6th Floor,
George Padmore Road,
P. O. Box, 76672 - 00508,
NAIROBI.

DESIGN DETAILS

Action	Name	Date
Designed By:	S.A	OCTOBER 2025
Drawn By:	J.M	OCTOBER 2025
Checked By:	L.R	OCTOBER 2025
Approved By:	S.O	OCTOBER 2025

DRAWING REVISIONS

No.	Revision Details	Reviewed	Initials	Date	Approved
		By			
		Checked			
		By			
		Checked			
		By			
		Checked			
		By			
		Checked			
		By			
		Checked			

MERU BYPASS:WESTERN BYPASS ROADS

PLAN AND PROFILE

ROAD: GIKUMENE JCT-MATE ROAD

CH 0+000 - CH 0+600

DRAWING SCALE:

H: 1:1000
V: 1:100

DRAWING NO:

PPF - GKN/MAT - 001

Doc. Type | Nature of Work | Number

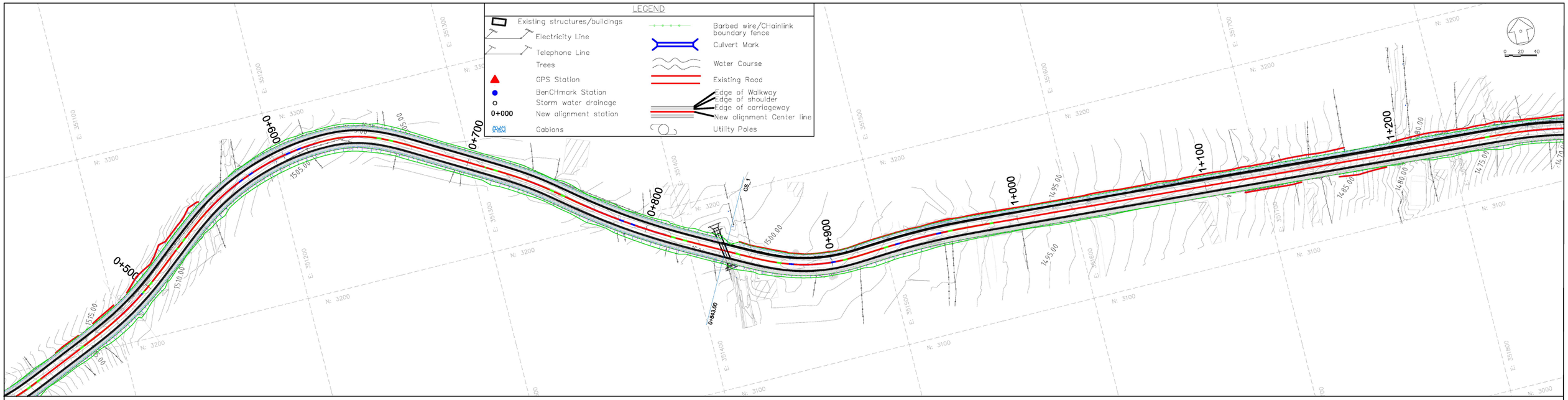

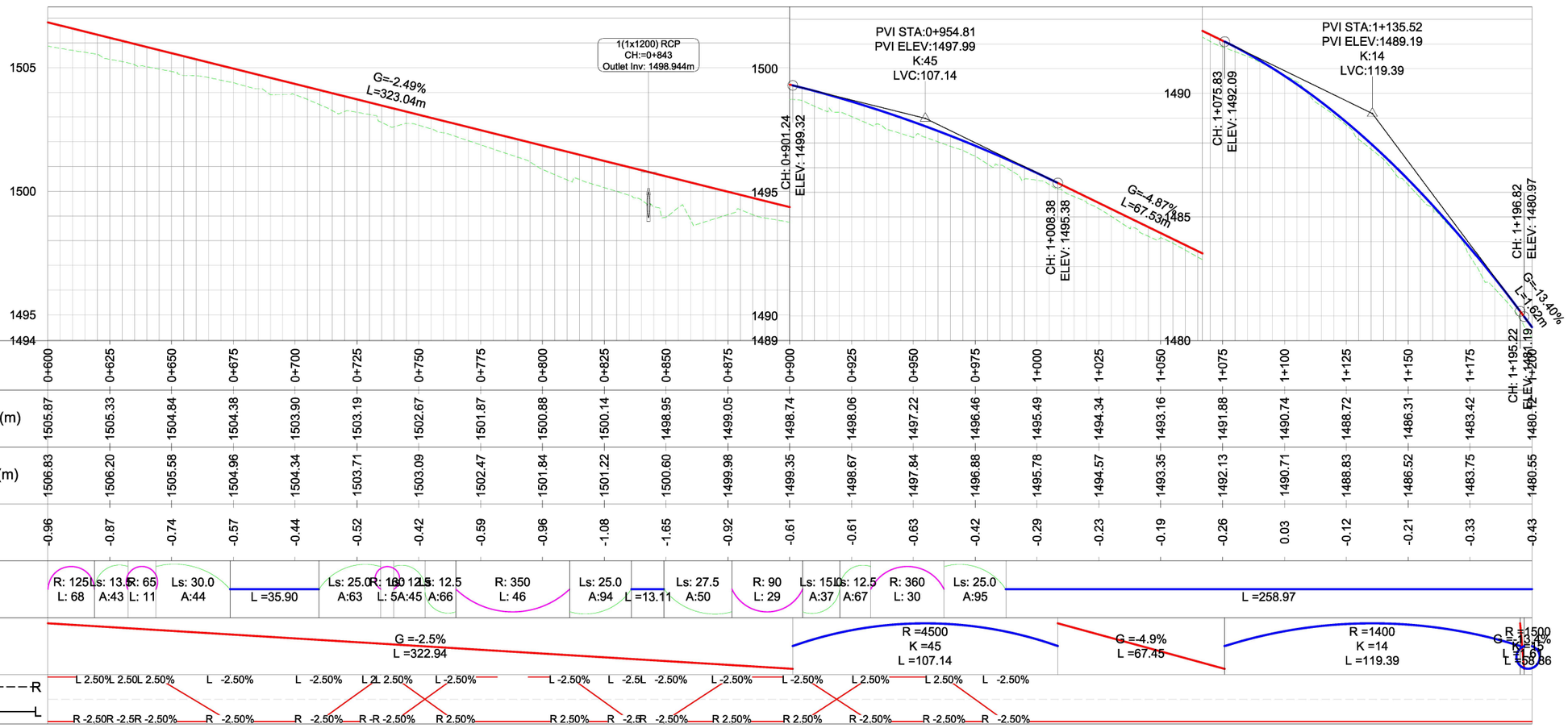

Chainage	0+600	0+625	0+650	0+675	0+700	0+725	0+750	0+775	0+800	0+825	0+850	0+875	0+900	0+925	0+950	0+975	1+000	1+025	1+050	1+075	1+100	1+125	1+150	1+175	1+200
Existing Ground Levels (m)	1505.87	1505.33	1504.84	1504.38	1503.90	1503.19	1502.67	1501.87	1500.88	1500.14	1498.95	1499.05	1498.74	1498.06	1497.22	1496.46	1495.49	1494.34	1493.16	1491.88	1490.74	1488.72	1486.31	1483.42	1480.42
Proposed Road Levels (m)	1506.83	1506.20	1505.58	1504.96	1504.34	1503.71	1503.09	1502.47	1501.84	1501.22	1500.60	1499.98	1499.35	1498.67	1497.84	1496.88	1495.78	1494.57	1493.35	1492.13	1490.71	1488.83	1486.52	1483.75	1480.55
Level Difference (m)	-0.96	-0.87	-0.74	-0.57	-0.44	-0.52	-0.42	-0.59	-0.96	-1.08	-1.65	-0.92	-0.61	-0.61	-0.63	-0.42	-0.29	-0.23	-0.19	-0.26	0.03	-0.12	-0.21	-0.33	-0.43

Superelevation	L 2.50%	L 2.50%	L 2.50%	L -2.50%	L -2.50%	L 2.50%	L -2.50%	L -2.50%	L -2.50%	L -2.5%	L -2.50%	L -2.50%	L -2.50%	L 2.50%	L 2.50%	L -2.50%	R -2.50%	R -2.5%	R -2.50%	R -2.50%	R 2.50%	R 2.50%	R -2.50%	R -2.50%	R -2.50%

CLIENT:
KENYA NATIONAL HIGHWAY AUTHORITY
Barabara Plaza,
Off Airport South Road,
P. O. Box, 49712 - 00100,
NAIROBI.

KENYA URBAN ROADS AUTHORITY
Barabara Plaza,
Off Airport South Road,
P. O. Box, 49712 - 00100,
NAIROBI.

FINANCIER:
THE WORLD BANK

PROJECT:
HORN OF AFRICA GATEWAY DEVELOPMENT PROJECT (HOAGDP): -

Consultancy Services for the Design and Works Supervision for the Proposed Extension of Meru Bypass.

CONTRACT NO:
KeNHA/RD/CS/D/4205/2024

CONSULTANT:
egis
One Padmore Place 6th Floor,
George Padmore Road,
P. O. Box, 76672 - 00508,
NAIROBI.

DESIGN DETAILS

Action	Name	Date
Designed By:	S.A	OCTOBER 2025
Drawn By:	J.M	OCTOBER 2025
Checked By:	L.R	OCTOBER 2025
Approved By:	S.O	OCTOBER 2025

DRAWING REVISIONS

No.	Revision Details	Reviewed	Initials	Date	Approved
		By			
		Checked			
		By			
		Checked			
		By			
		Checked			
		By			
		Checked			
		By			
		Checked			

MERU BYPASS:WESTERN BYPASS ROADS
PLAN AND PROFILE
ROAD: GIKUMENE JCT-MATE ROAD
CH 0+600 - CH 1+200

DRAWING SCALE:
H: 1:1000
V: 1:100

DRAWING NO:
P P F - GKN/MAT - 0 0 2
Doc. Type | Nature of Work | Number

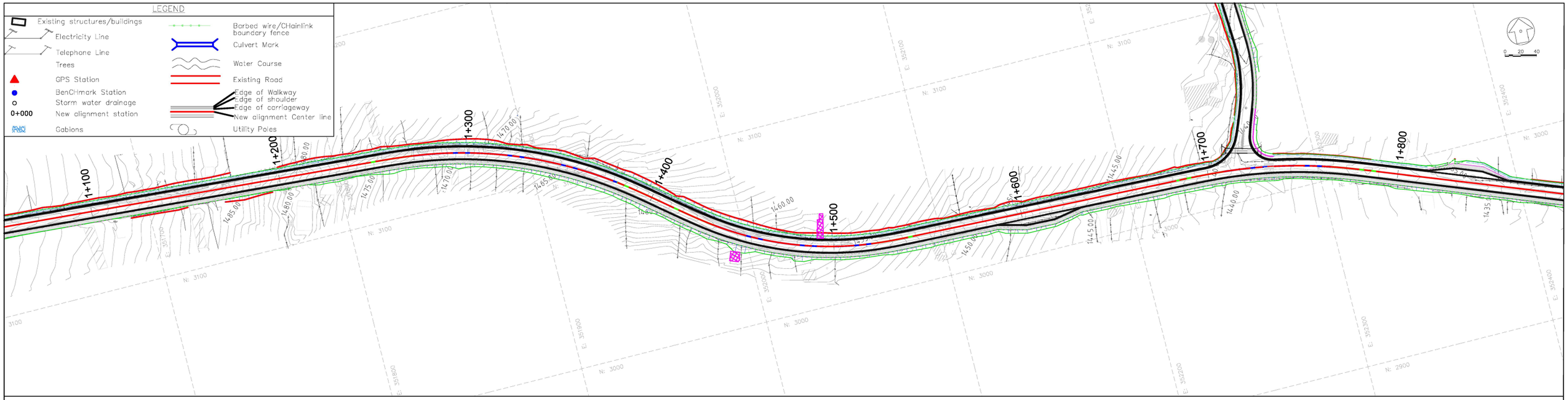

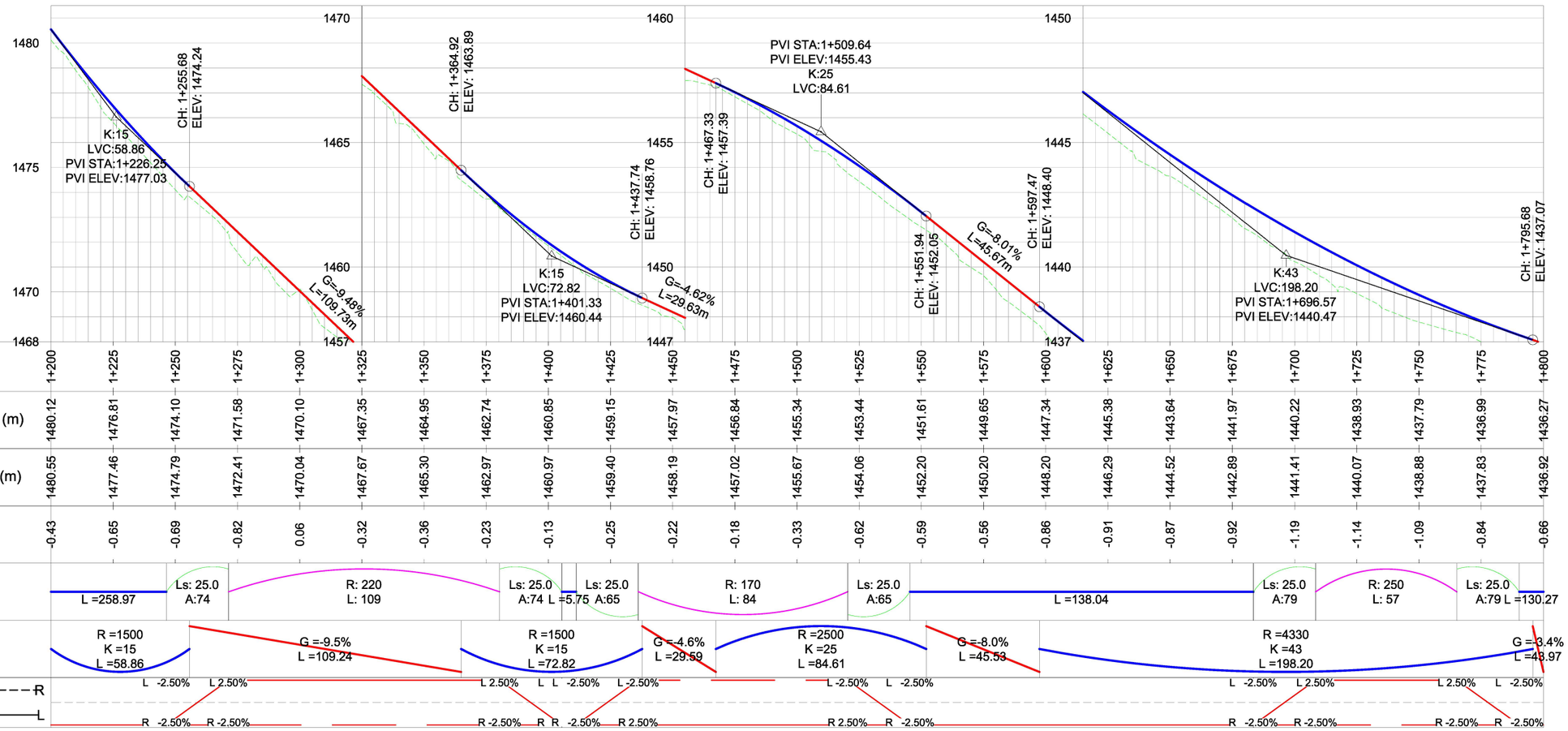

Chainage	1+200	1+225	1+250	1+275	1+300	1+325	1+350	1+375	1+400	1+425	1+450	1+475	1+500	1+525	1+550	1+575	1+600	1+625	1+650	1+675	1+700	1+725	1+750	1+775	1+800
Existing Ground Levels (m)	1480.12	1476.81	1474.10	1471.58	1470.10	1467.35	1464.95	1462.74	1460.85	1459.15	1457.97	1456.84	1455.34	1453.44	1451.61	1449.65	1447.34	1445.38	1443.64	1441.97	1440.22	1438.93	1437.79	1436.99	1436.27
Proposed Road Levels (m)	1480.55	1477.46	1474.79	1472.41	1470.04	1467.67	1465.30	1462.97	1460.97	1459.40	1458.19	1457.02	1455.67	1454.06	1452.20	1450.20	1448.20	1446.29	1444.52	1442.89	1441.41	1440.07	1438.88	1437.83	1436.92
Level Difference (m)	-0.43	-0.65	-0.69	-0.82	0.06	-0.32	-0.36	-0.23	-0.13	-0.25	-0.22	-0.18	-0.33	-0.62	-0.59	-0.56	-0.86	-0.91	-0.87	-0.92	-1.19	-1.14	-1.09	-0.84	-0.66
Horizontal Geometry	L =258.97	Ls: 25.0 A:74	R: 220 L: 109	Ls: 25.0 A:74	L =5.75	Ls: 25.0 A:65	R: 170 L: 84	Ls: 25.0 A:65	L =138.04	Ls: 25.0 A:79	R: 250 L: 57	Ls: 25.0 A:79	L =130.27												
Vertical Geometry	R =1500 K =15 L =58.86	G =-9.5% L =109.24	R =1500 K =15 L =72.82	G =-4.6% L =29.59	R =2500 K =25 L =84.61	G =-8.0% L =45.53	R =4330 K =43 L =198.20	G =-3.4% L =43.97																	
Superelevation	L -2.50%	L 2.50%	L 2.50%	L L -2.50%	L -2.50%	L 2.50%	R -2.50%	R -2.50%	R -2.50%	R -2.50%	R -2.50%	R 2.50%	R -2.50%	R 2.50%	R -2.50%	R -2.50%	R -2.50%	R -2.50%	R -2.50%	R -2.50%	R -2.50%	R -2.50%	R -2.50%	R -2.50%	R -2.50%

CLIENT:
KENYA NATIONAL HIGHWAY AUTHORITY
Barabara Plaza,
Off Airport South Road,
P. O. Box, 49712 - 00100,
NAIROBI.

KENYA URBAN ROADS AUTHORITY
Barabara Plaza,
Off Airport South Road,
P. O. Box, 49712 - 00100,
NAIROBI.

FINANCIER:
THE WORLD BANK

PROJECT:
HORN OF AFRICA GATEWAY DEVELOPMENT PROJECT (HOAGDP): -

Consultancy Services for the Design and Works Supervision for the Proposed Extension of Meru Bypass.

CONTRACT NO:
KeNHA/RD/CS/D/4205/2024

CONSULTANT:
egis
One Padmore Place 6th Floor,
George Padmore Road,
P. O. Box, 76672 - 00508,
NAIROBI.

DESIGN DETAILS

Action	Name	Date
Designed By:	S.A	OCTOBER 2025
Drawn By:	J.M	OCTOBER 2025
Checked By:	L.R	OCTOBER 2025
Approved By:	S.O	OCTOBER 2025

DRAWING REVISIONS

No.	Revision Details	Reviewed	Initials	Date	Approved
		By / Checked			

MERU BYPASS:WESTERN BYPASS ROADS
PLAN AND PROFILE
ROAD: GIKUMENE JCT-MATE ROAD
CH 1+200 - CH 1+800

DRAWING SCALE:
H: 1:1000
V: 1:100

DRAWING NO:
P P F - GKN/MAT - 0 0 3
Doc. Type | Nature of Work | Number

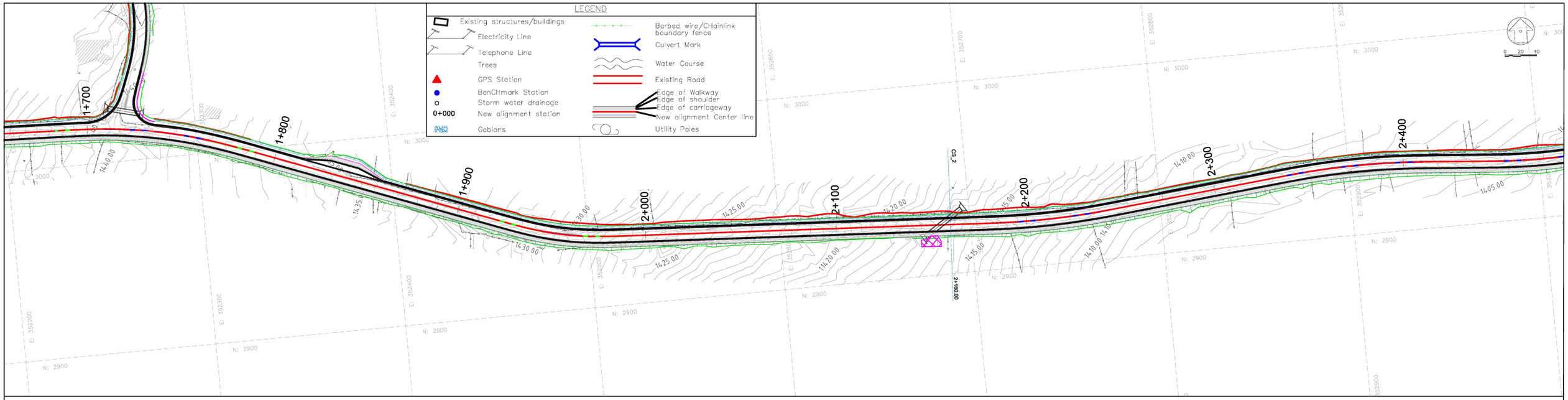

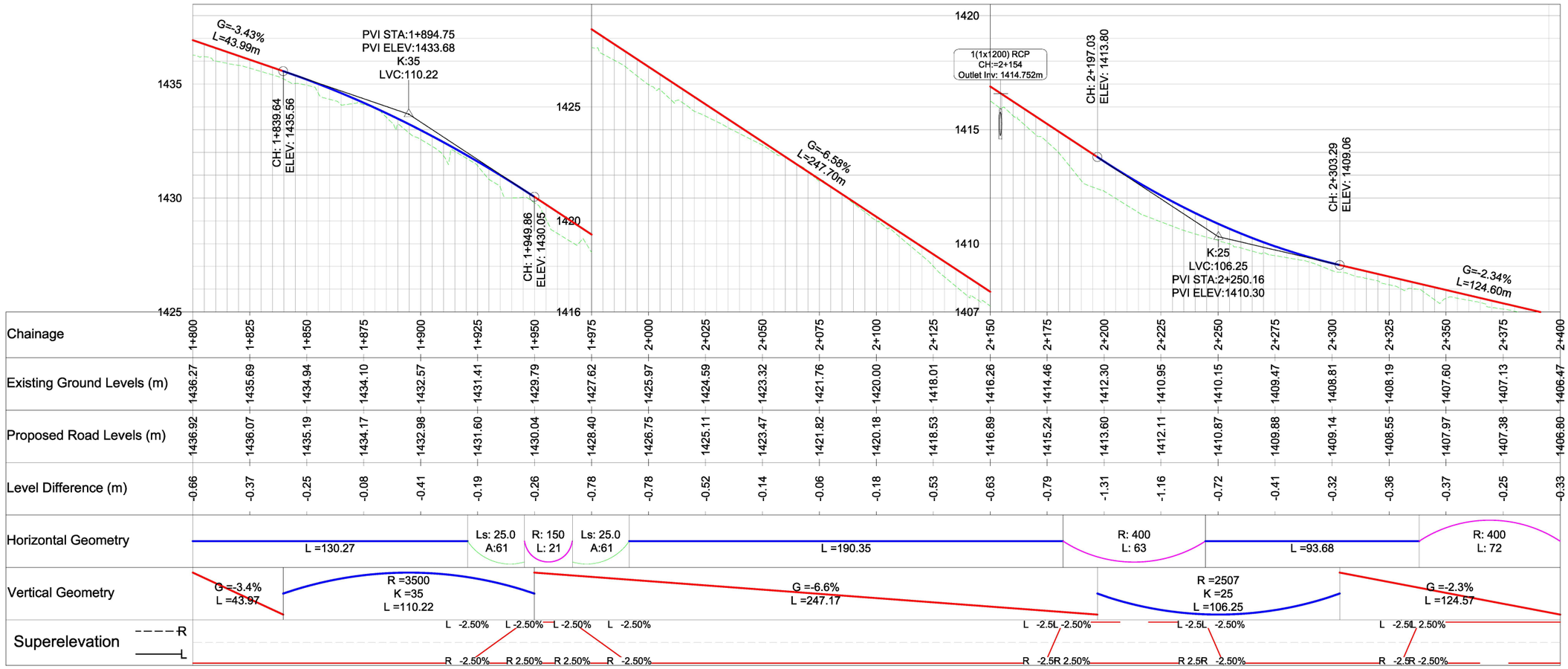

Chainage	1+800	1+825	1+850	1+875	1+900	1+925	1+950	1+975	2+000	2+025	2+050	2+075	2+100	2+125	2+150	2+175	2+200	2+225	2+250	2+275	2+300	2+325	2+350	2+375	2+400
Existing Ground Levels (m)	1436.27	1435.69	1434.94	1434.10	1432.57	1431.41	1429.79	1427.62	1425.97	1424.59	1423.32	1421.76	1420.00	1418.01	1416.26	1414.46	1412.30	1410.95	1410.15	1409.47	1408.81	1408.19	1407.60	1407.13	1406.47
Proposed Road Levels (m)	1436.92	1436.07	1435.19	1434.17	1432.98	1431.60	1430.04	1428.40	1426.75	1425.11	1423.47	1421.82	1420.18	1418.53	1416.89	1415.24	1413.60	1412.11	1410.87	1409.88	1409.14	1408.55	1407.97	1407.38	1406.80
Level Difference (m)	-0.66	-0.37	-0.25	-0.08	-0.41	-0.19	-0.26	-0.78	-0.78	-0.52	-0.14	-0.06	-0.18	-0.53	-0.63	-0.79	-1.31	-1.16	-0.72	-0.41	-0.32	-0.36	-0.37	-0.25	-0.33
Horizontal Geometry	L =130.27		Ls: 25.0 A:61	R: 150 L: 21	Ls: 25.0 A:61	L =190.35										R: 400 L: 63		L =93.68				R: 400 L: 72			
Vertical Geometry	G =-3.4% L =43.97		R =3500 K =35 L =110.22			G =-6.6% L =247.17											R =2507 K =25 L =106.25				G =-2.3% L =124.57				
Superelevation	L -2.50%	L -2.50%	L -2.50%	L -2.50%												L -2.5L -2.50%		L -2.5L -2.50%			L -2.5L 2.50%				
R	R -2.50%	R 2.50%	R 2.50%	R -2.50%												R -2.5R 2.50%		R 2.5R -2.50%			R -2.5R -2.50%				

CLIENT:
Kenya National Highways Authority
Quality Highways, Better Connections
KENYA NATIONAL HIGHWAY AUTHORITY
Barabara Plaza,
Off Airport South Road,
P. O. Box, 49712 - 00100,
NAIROBI.

KENYA URBAN ROADS AUTHORITY
Barabara Plaza,
Off Airport South Road,
P. O. Box, 49712 - 00100,
NAIROBI.

FINANCIER:
THE WORLD BANK

PROJECT:
HORN OF AFRICA GATEWAY DEVELOPMENT PROJECT (HOAGDP): -
Consultancy Services for the Design and Works Supervision for the Proposed Extension of Meru Bypass.

CONTRACT NO:
KeNHA/RD/CS/D/4205/2024

CONSULTANT:
egis
One Padmore Place 6th Floor,
George Padmore Road,
P. O. Box, 76672 - 00508,
NAIROBI.

DESIGN DETAILS

Action	Name	Date
Designed By:	S.A	OCTOBER 2025
Drawn By:	J.M	OCTOBER 2025
Checked By:	L.R	OCTOBER 2025
Approved By:	S.O	OCTOBER 2025

DRAWING REVISIONS

No.	Revision Details	Reviewed	Initials	Date	Approved
		By			
		Checked			
		By			
		Checked			
		By			
		Checked			
		By			
		Checked			
		By			
		Checked			

MERU BYPASS:WESTERN BYPASS ROADS
PLAN AND PROFILE
ROAD: GIKUMENE JCT-MATE ROAD
CH 1+800 - CH 2+400

DRAWING SCALE:
H: 1:1000
V: 1:100

DRAWING NO:
P P F - GKN/MAT - 0 0 4
Doc. Type | Nature of Work | Number

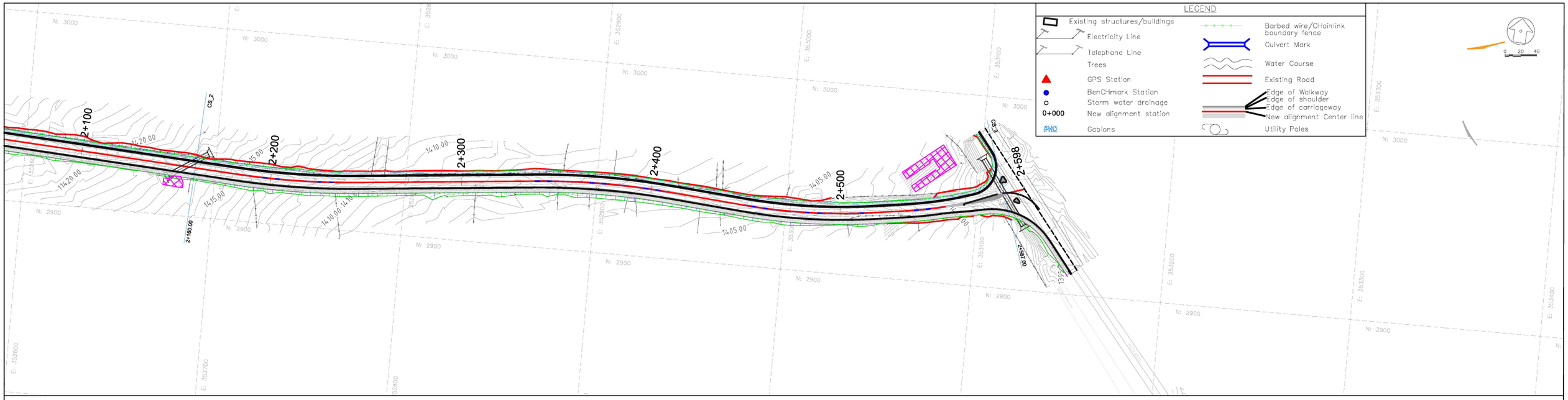

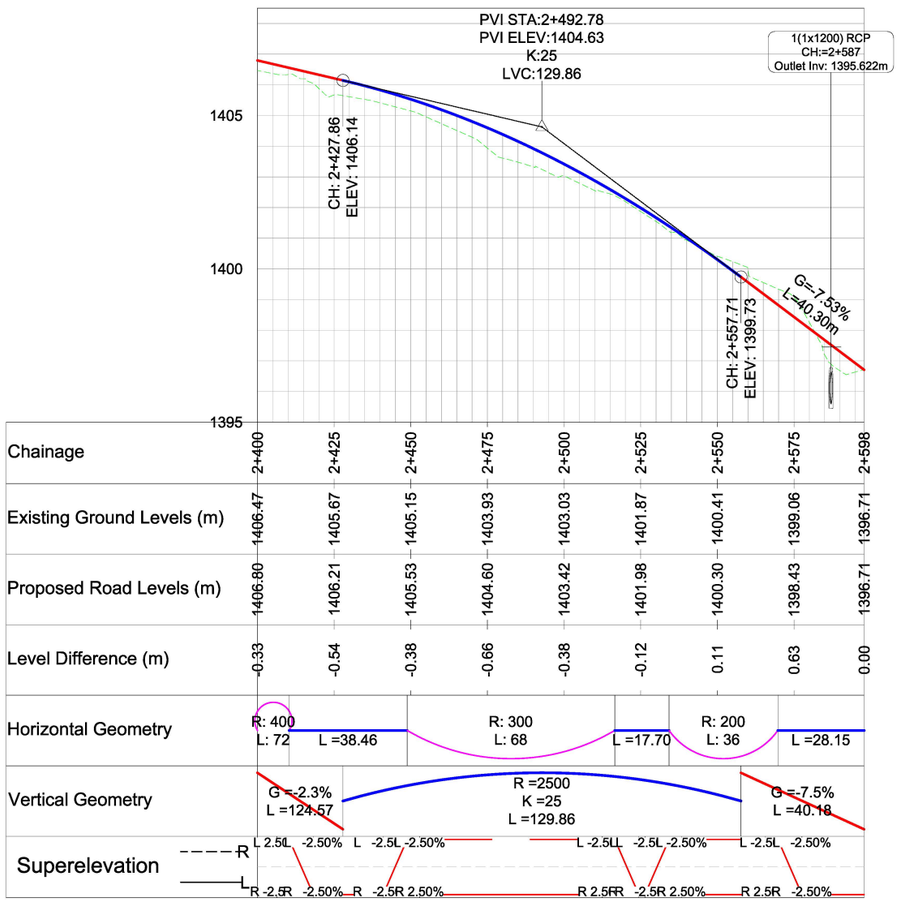

CLIENT:

Kenya National Highways Authority

KENYA NATIONAL HIGHWAY AUTHORITY
Barabara Plaza,
Off Airport South Road,
P. O. Box, 49712 - 00100,
NAIROBI.

KENYA URBAN ROADS AUTHORITY
Barabara Plaza,
Off Airport South Road,
P. O. Box, 49712 - 00100,
NAIROBI.

FINANCIER:

THE WORLD BANK

PROJECT:

HORN OF AFRICA GATEWAY DEVELOPMENT PROJECT (HOAGDP): -

Consultancy Services for the Design and Works Supervision for the Proposed Extension of Meru Bypass.

CONTRACT NO:

KeNHA/RD/CS/D/4205/2024

CONSULTANT:

egis

One Padmore Place 6th Floor,
George Padmore Road,
P. O. Box, 76672 - 00508,
NAIROBI.

DESIGN DETAILS

Action	Name	Date
Designed By:	S.A	OCTOBER 2025
Drawn By:	J.M	OCTOBER 2025
Checked By:	L.R	OCTOBER 2025
Approved By:	S.O	OCTOBER 2025

DRAWING REVISIONS

No.	Revision Details	Reviewed	Initials	Date	Approved
		By			
		Checked			
		By			
		Checked			
		By			
		Checked			
		By			
		Checked			
		By			
		Checked			

MERU BYPASS:WESTERN BYPASS ROADS

PLAN AND PROFILE

ROAD: GIKUMENE JCT-MATE ROAD

CH 2+400 - CH 2+597

DRAWING SCALE:

H: 1:1000
V: 1:100

DRAWING NO:

P P F - GKN/MAT - 0 0 5

Doc. Type | Nature of Work | Number

MERU BY-PASS ROADS

JUNCTIONS LAYOUT

MERU BY-PASS ROADS

KAMBAKIA ROADS JUNCTIONS LAYOUTS

SETTING OUT DATA		
POINT NUMBER	X	Y
1	348664.332	6744.752
2	348652.682	6750.226
3	348636.120	6771.023
4	348628.898	6782.517
5	348627.712	6777.065
6	348616.245	6765.871
7	348601.429	6770.541

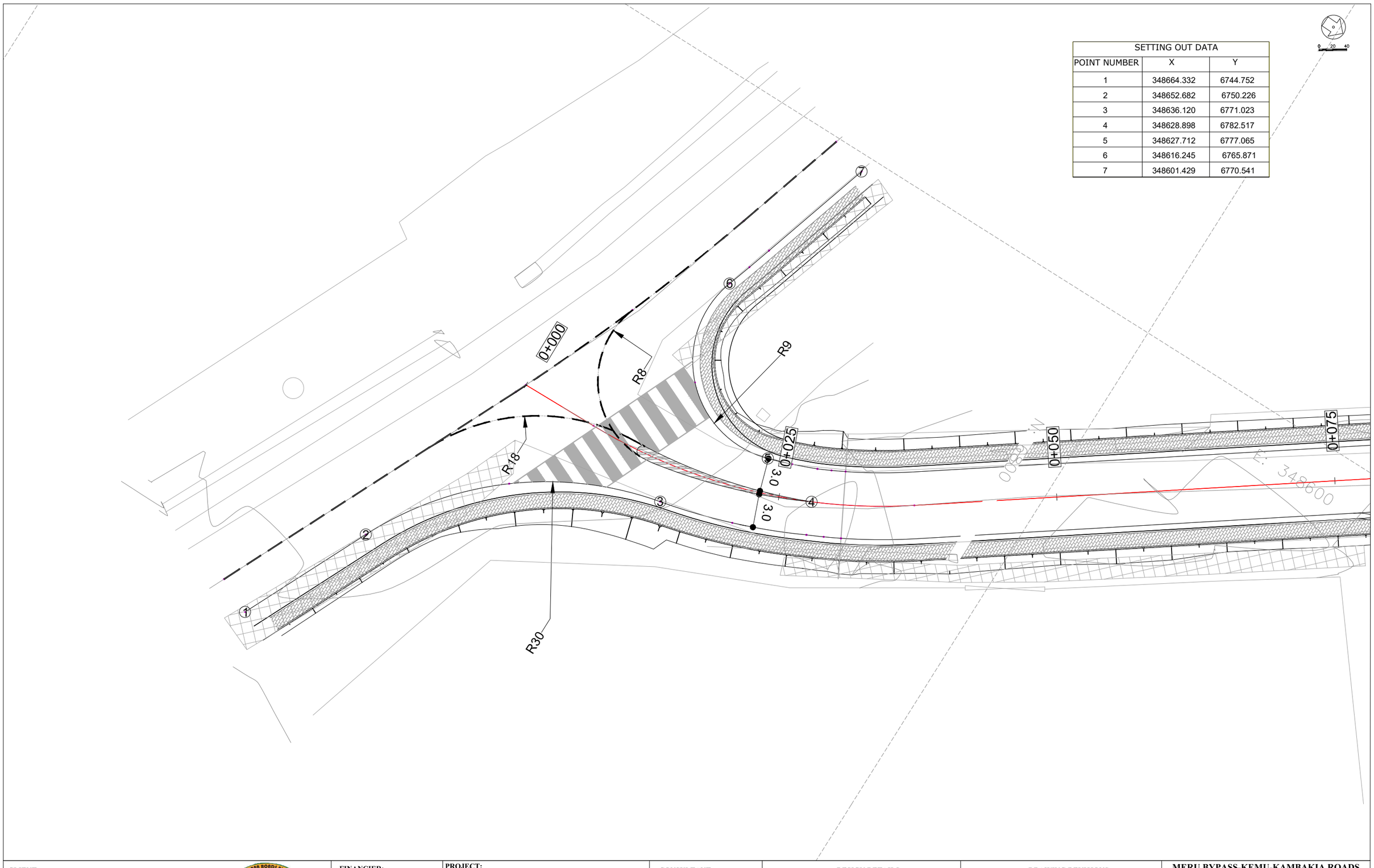

CLIENT:

KENYA NATIONAL HIGHWAY AUTHORITY
Barabara Plaza,
Off Airport South Road,
P. O. Box, 49712 - 00100,
NAIROBI.

KENYA URBAN ROADS AUTHORITY
Barabara Plaza,
Off Airport South Road,
P. O. Box, 49712 - 00100,
NAIROBI.

FINANCIER:

THE WORLD BANK

PROJECT:

HORN OF AFRICA GATEWAY DEVELOPMENT PROJECT (HOAGDP): -

Consultancy Services for the Design and Works Supervision for the Proposed Extension of Meru Bypass.

CONTRACT NO:

KeNHA/RD/CS/D/4205/2024

CONSULTANT:

egis

One Padmore Place 6th Floor,
George Padmore Road,
P. O. Box, 76672 - 00508,
NAIROBI.

DESIGN DETAILS		
Action	Name	Date
Designed By:	S.A	AUG 2025
Drawn By:	J.M	AUG 2025
Checked By:	L.R	AUG 2025
Approved By:	S.O	AUG 2025

DRAWING REVISIONS					
No.	Revision Details	Reviewed	Initials	Date	Approved
		By			
		Checked			
		By			
		Checked			
		By			
		Checked			
		By			
		Checked			
		By			
		Checked			

MERU BYPASS-KEMU-KAMBAKIA ROADS

JUNCTION LAYOUTS

THREE STEERS JUNCTION

DRAWING SCALE:

DRAWING NO:

J C T - LAY _ - 0 0 1
Doc. Type | Nature of Work | Number

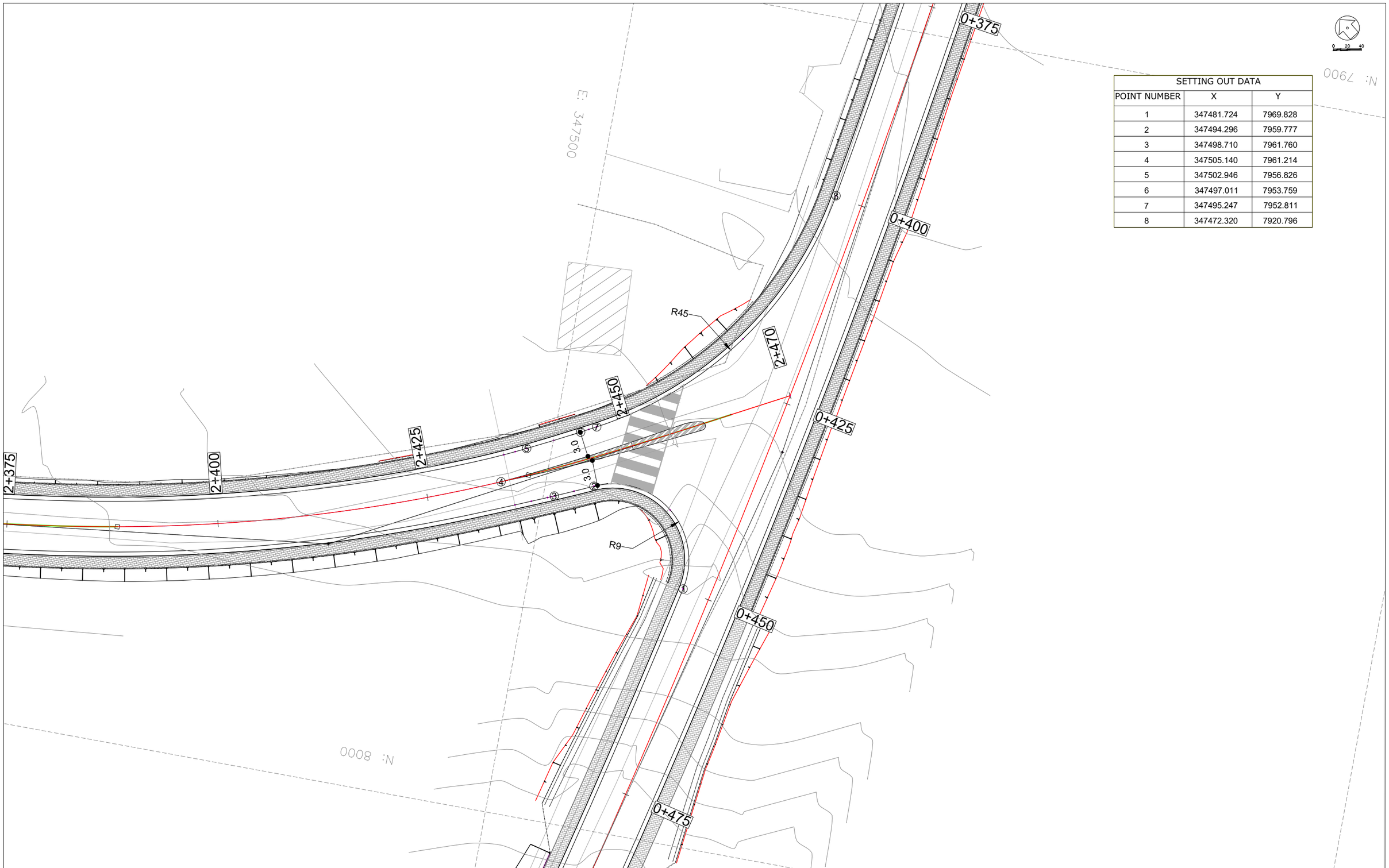

SETTING OUT DATA		
POINT NUMBER	X	Y
1	347481.724	7969.828
2	347494.296	7959.777
3	347498.710	7961.760
4	347505.140	7961.214
5	347502.946	7956.826
6	347497.011	7953.759
7	347495.247	7952.811
8	347472.320	7920.796

CLIENT:

KENYA NATIONAL HIGHWAY AUTHORITY
Barabara Plaza,
Off Airport South Road,
P. O. Box, 49712 - 00100,
NAIROBI.

KENYA URBAN ROADS AUTHORITY
Barabara Plaza,
Off Airport South Road,
P. O. Box, 49712 - 00100,
NAIROBI.

FINANCIER:

THE WORLD BANK

PROJECT:

HORN OF AFRICA GATEWAY DEVELOPMENT PROJECT (HOAGDP): -

Consultancy Services for the Design and Works Supervision for the Proposed Extension of Meru Bypass.

CONTRACT NO:

KeNHA/RD/CS/D/4205/2024

CONSULTANT:

egis

One Padmore Place 6th Floor,
George Padmore Road,
P. O. Box, 76672 - 00508,
NAIROBI.

DESIGN DETAILS

Action	Name	Date
Designed By:	S.A	AUG 2025
Drawn By:	J.M	AUG 2025
Checked By:	L.R	AUG 2025
Approved By:	S.O	AUG 2025

DRAWING REVISIONS

No.	Revision Details	Reviewed	Initials	Date	Approved
		By			
		Checked			
		By			
		Checked			
		By			
		Checked			
		By			
		Checked			
		By			
		Checked			

MERU BYPASS-KEMU-KAMBAKIA ROADS

JUNCTION LAYOUTS

KAMBAKIA JUNCTION

DRAWING SCALE:

DRAWING NO:

JCT - LAY - 002
Doc. Type | Nature of Work | Number

SETTING OUT DATA		
POINT NUMBER	X	Y
1	348227.020	7739.556
2	348238.328	7750.392
3	348245.634	7750.497
4	348253.219	7754.520
5	348245.012	7760.267
6	348235.132	7776.794

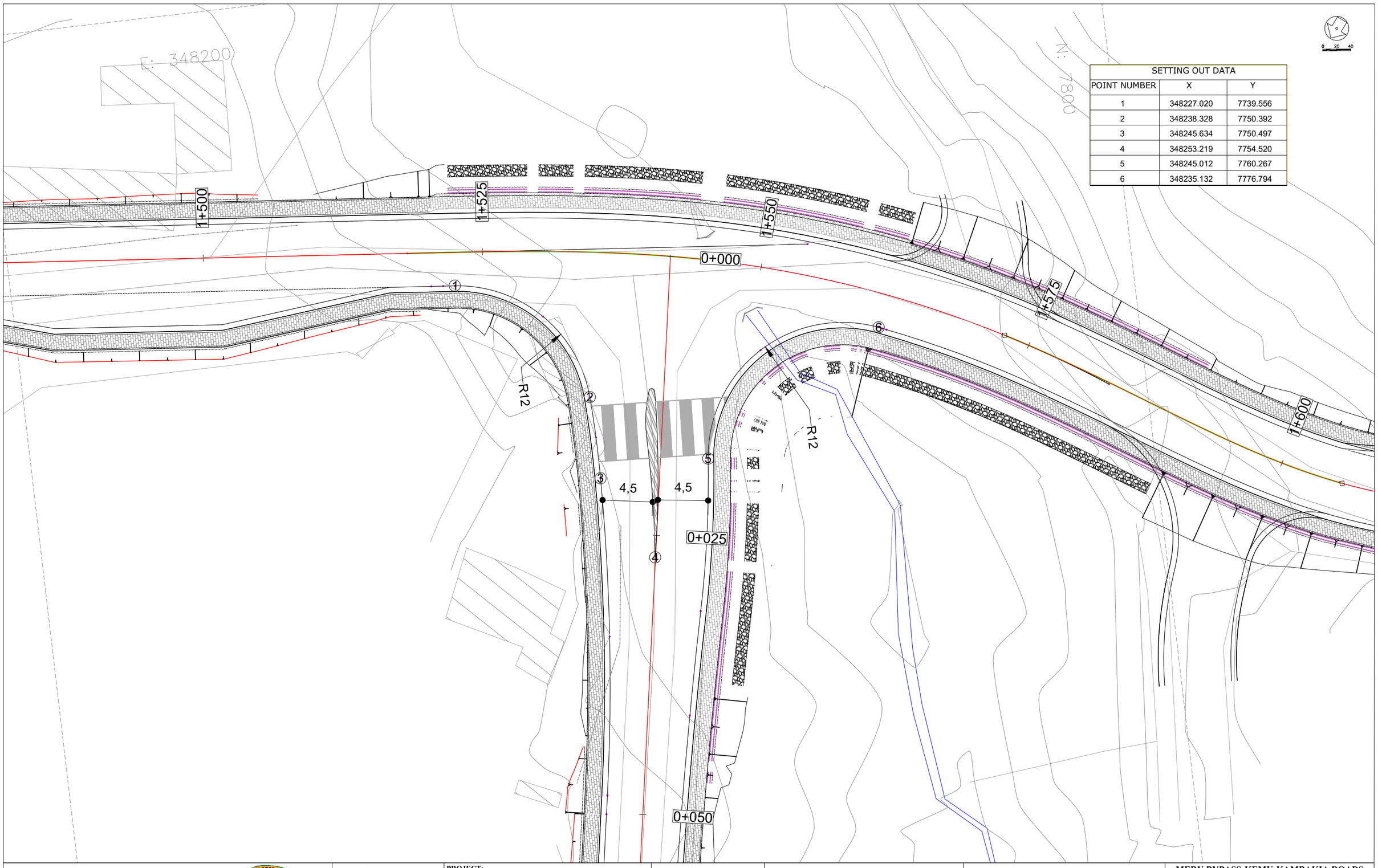

CLIENT:

KENYA NATIONAL HIGHWAY AUTHORITY
Barabara Plaza,
Off Airport South Road,
P. O. Box, 49712 - 00100,
NAIROBI.

KENYA URBAN ROADS AUTHORITY
Barabara Plaza,
Off Airport South Road,
P. O. Box, 49712 - 00100,
NAIROBI.

FINANCIER:

THE WORLD BANK

PROJECT:

HORN OF AFRICA GATEWAY DEVELOPMENT PROJECT (HOAGDP): -

Consultancy Services for the Design and Works Supervision for the Proposed Extension of Meru Bypass.

CONTRACT NO:

KeNHA/RD/CS/D/4205/2024

CONSULTANT:

egis

One Padmore Place 6th Floor,
George Padmore Road,
P. O. Box, 76672 - 00508,
NAIROBI.

DESIGN DETAILS

Action	Name	Date
Designed By:	S.A	AUG 2025
Drawn By:	J.M	AUG 2025
Checked By:	L.R	AUG 2025
Approved By:	S.O	AUG 2025

DRAWING REVISIONS

No.	Revision Details	Reviewed	Initials	Date	Approved
		By			
		Checked			
		By			
		Checked			
		By			
		Checked			
		By			
		Checked			
		By			
		Checked			

MERU BYPASS-KEMU-KAMBAKIA ROADS

JUNCTION LAYOUTS

KONGOACHEKE JUNCTION

DRAWING SCALE:

DRAWING NO:

J C T - LAY - 0 0 3
Doc. Type | Nature of Work | Number

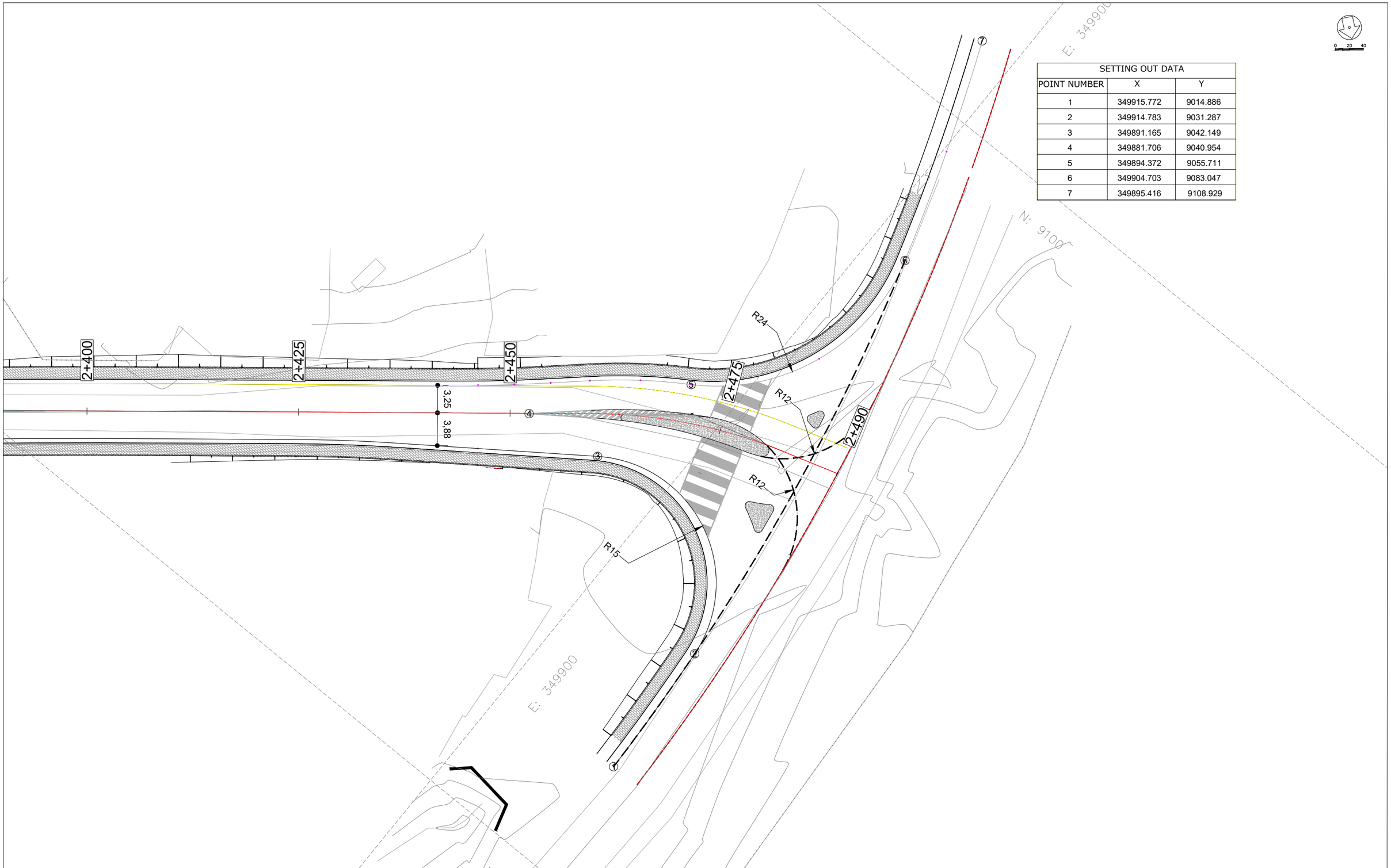

SETTING OUT DATA		
POINT NUMBER	X	Y
1	349915.772	9014.886
2	349914.783	9031.287
3	349891.165	9042.149
4	349881.706	9040.954
5	349894.372	9055.711
6	349904.703	9083.047
7	349895.416	9108.929

CLIENT:

KENYA NATIONAL HIGHWAY AUTHORITY
Barabara Plaza,
Off Airport South Road,
P. O. Box, 49712 - 00100,
NAIROBI.

KENYA URBAN ROADS AUTHORITY
Barabara Plaza,
Off Airport South Road,
P. O. Box, 49712 - 00100,
NAIROBI.

FINANCIER:

THE WORLD BANK

PROJECT:

HORN OF AFRICA GATEWAY DEVELOPMENT PROJECT (HOAGDP): -

Consultancy Services for the Design and Works Supervision for the Proposed Extension of Meru Bypass.

CONTRACT NO:

KeNHA/RD/CS/D/4205/2024

CONSULTANT:

egis

One Padmore Place 6th Floor,
George Padmore Road,
P. O. Box, 76672 - 00508,
NAIROBI.

DESIGN DETAILS

Action	Name	Date
Designed By:	S.A	AUG 2025
Drawn By:	J.M	AUG 2025
Checked By:	L.R	AUG 2025
Approved By:	S.O	AUG 2025

DRAWING REVISIONS

No.	Revision Details	Reviewed	Initials	Date	Approved
		By			
		Checked			
		By			
		Checked			
		By			
		Checked			
		By			
		Checked			
		By			
		Checked			

MERU BYPASS-KEMU-KAMBAKIA ROADS

JUNCTION LAYOUTS

KWA-MUKURU JUNCTION

DRAWING SCALE:

DRAWING NO:

JCT - LAY - 004
Doc. Type | Nature of Work | Number

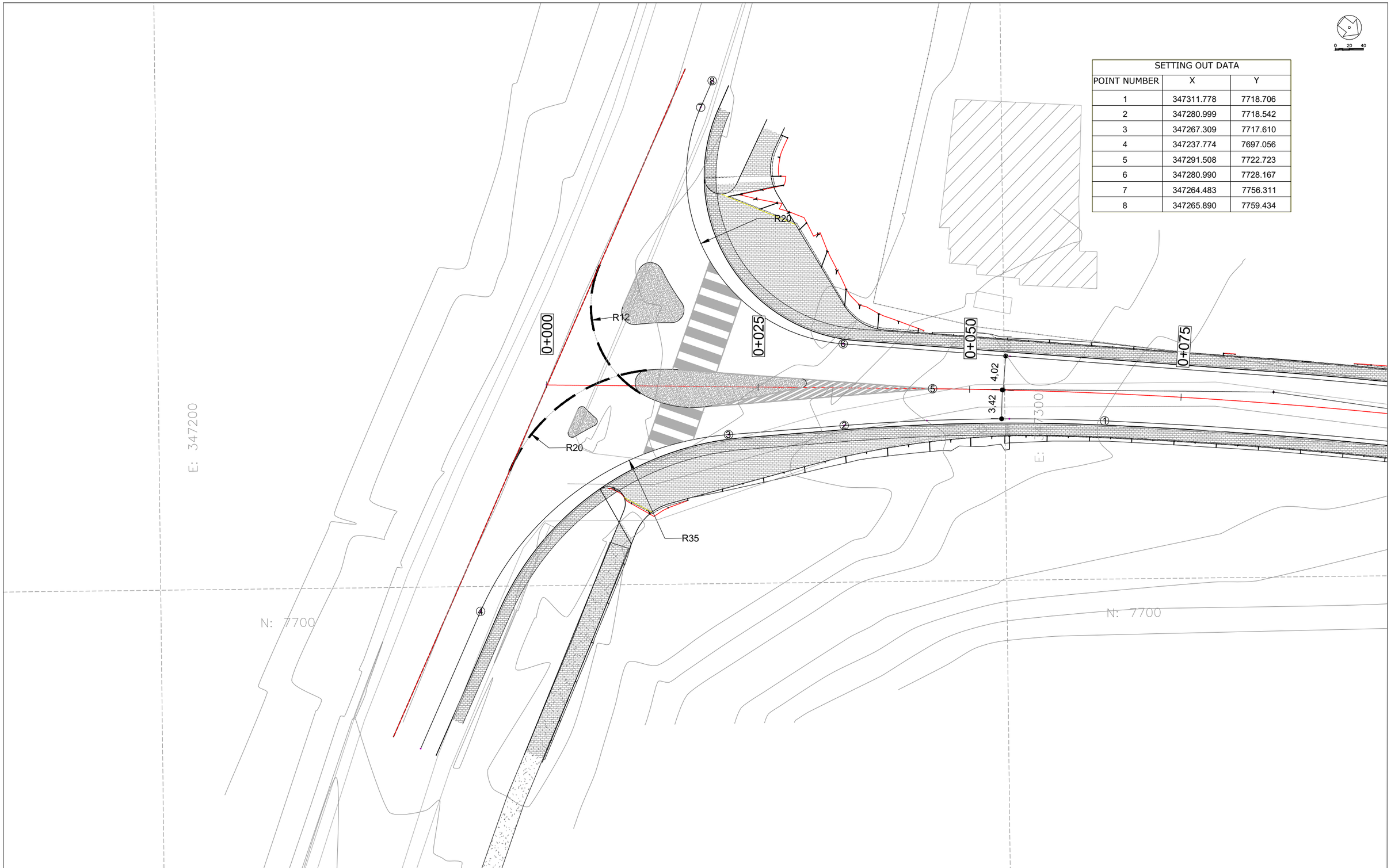

SETTING OUT DATA		
POINT NUMBER	X	Y
1	347311.778	7718.706
2	347280.999	7718.542
3	347267.309	7717.610
4	347237.774	7697.056
5	347291.508	7722.723
6	347280.990	7728.167
7	347264.483	7756.311
8	347265.890	7759.434

CLIENT:

KENYA NATIONAL HIGHWAY AUTHORITY
Barabara Plaza,
Off Airport South Road,
P. O. Box, 49712 - 00100,
NAIROBI.

KENYA URBAN ROADS AUTHORITY
Barabara Plaza,
Off Airport South Road,
P. O. Box, 49712 - 00100,
NAIROBI.

FINANCIER:

THE WORLD BANK

PROJECT:

HORN OF AFRICA GATEWAY DEVELOPMENT PROJECT (HOAGDP): -

Consultancy Services for the Design and Works Supervision for the Proposed Extension of Meru Bypass.

CONTRACT NO:

KeNHA/RD/CS/D/4205/2024

CONSULTANT:

egis

One Padmore Place 6th Floor,
George Padmore Road,
P. O. Box, 76672 - 00508,
NAIROBI.

DESIGN DETAILS

Action	Name	Date
Designed By:	S.A	AUG 2025
Drawn By:	J.M	AUG 2025
Checked By:	L.R	AUG 2025
Approved By:	S.O	AUG 2025

DRAWING REVISIONS

No.	Revision Details	Reviewed	Initials	Date	Approved
		By			
		Checked			
		By			
		Checked			
		By			
		Checked			
		By			
		Checked			
		By			
		Checked			

MERU BYPASS-KEMU-KAMBAKIA ROADS

JUNCTION LAYOUTS

KAMBAKIA-A9(B6) JUNCTION

DRAWING SCALE:

DRAWING NO:

J C T - LAY - 0 0 5
Doc. Type | Nature of Work | Number

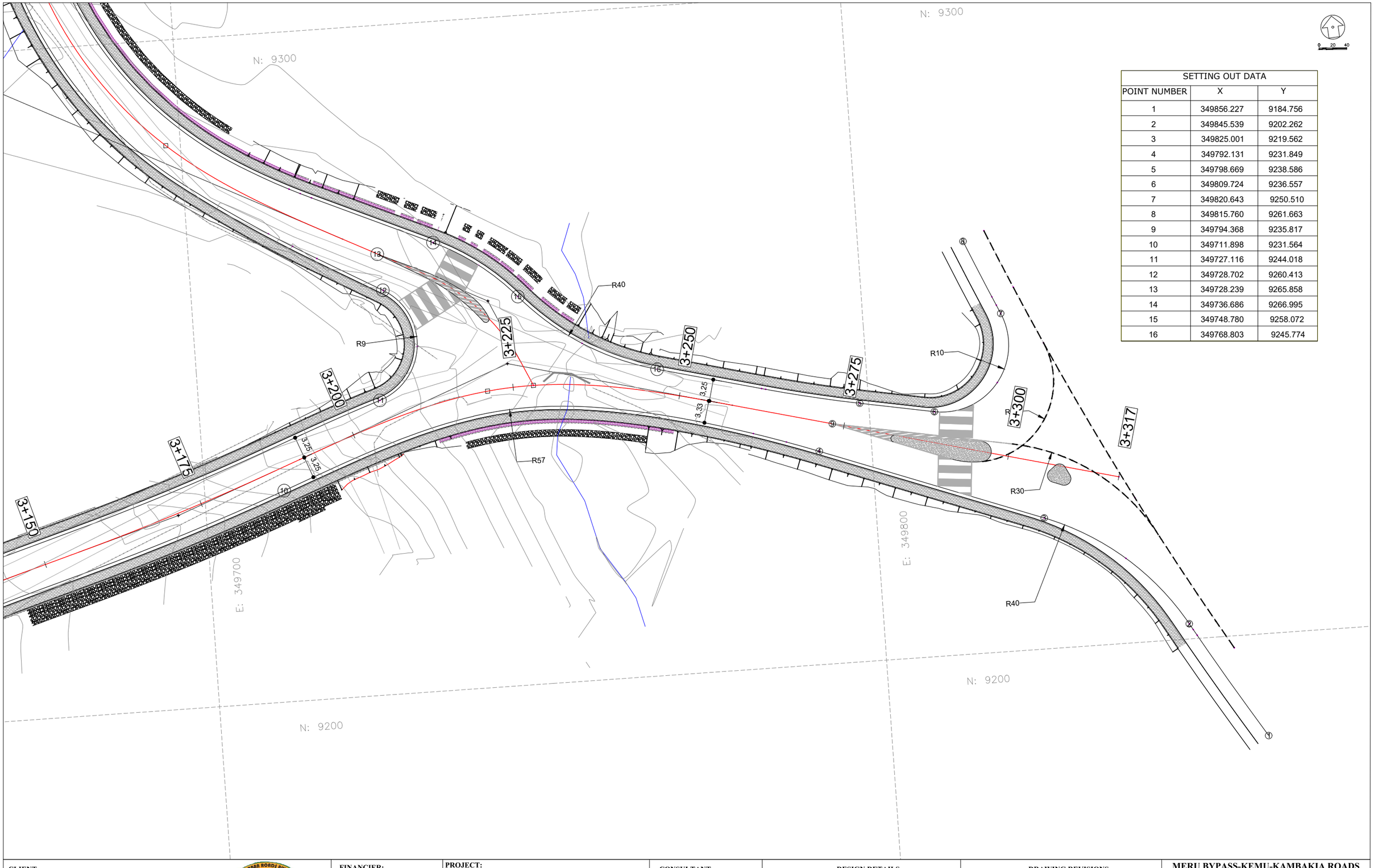

SETTING OUT DATA		
POINT NUMBER	X	Y
1	349856.227	9184.756
2	349845.539	9202.262
3	349825.001	9219.562
4	349792.131	9231.849
5	349798.669	9238.586
6	349809.724	9236.557
7	349820.643	9250.510
8	349815.760	9261.663
9	349794.368	9235.817
10	349711.898	9231.564
11	349727.116	9244.018
12	349728.702	9260.413
13	349728.239	9265.858
14	349736.686	9266.995
15	349748.780	9258.072
16	349768.803	9245.774

CLIENT:

KENYA NATIONAL HIGHWAY AUTHORITY
Barabara Plaza,
Off Airport South Road,
P. O. Box, 49712 - 00100,
NAIROBI.

KENYA URBAN ROADS AUTHORITY
Barabara Plaza,
Off Airport South Road,
P. O. Box, 49712 - 00100,
NAIROBI.

FINANCIER:

THE WORLD BANK

PROJECT:

HORN OF AFRICA GATEWAY DEVELOPMENT PROJECT (HOAGDP): -

Consultancy Services for the Design and Works Supervision for the Proposed Extension of Meru Bypass.

CONTRACT NO:

KeNHA/RD/CS/D/4205/2024

CONSULTANT:

egis

One Padmore Place 6th Floor,
George Padmore Road,
P. O. Box, 76672 - 00508,
NAIROBI.

DESIGN DETAILS

Action	Name	Date
Designed By:	S.A	AUG 2025
Drawn By:	J.M	AUG 2025
Checked By:	L.R	AUG 2025
Approved By:	S.O	AUG 2025

DRAWING REVISIONS

No.	Revision Details	Reviewed	Initials	Date	Approved
		By			
		Checked			
		By			
		Checked			
		By			
		Checked			
		By			
		Checked			
		By			
		Checked			

MERU BYPASS-KEMU-KAMBAKIA ROADS

JUNCTION LAYOUTS

KAGOTONE JUNCTION

DRAWING SCALE:

DRAWING NO:

JCT - LAY _ - 006
Doc. Type | Nature of Work | Number

SETTING OUT DATA		
POINT NUMBER	X	Y
1	349134.922	8432.210
2	349145.469	8417.573
3	349160.060	8417.557
4	349129.637	8428.395
5	349140.337	8413.576
6	349140.335	8390.190
7	349142.974	8415.476

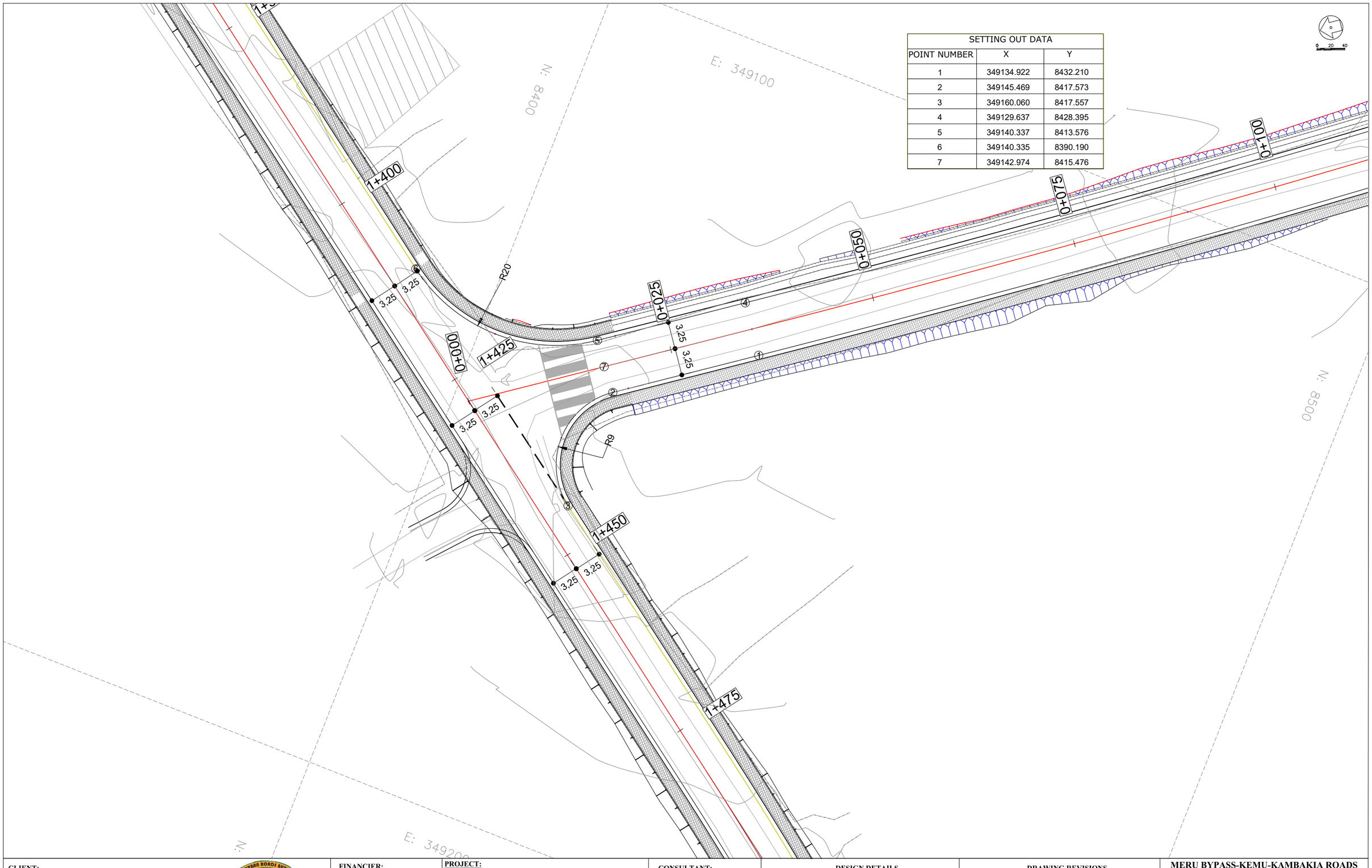

CLIENT:

KENYA NATIONAL HIGHWAY AUTHORITY
Barabara Plaza,
Off Airport South Road,
P. O. Box, 49712 - 00100,
NAIROBI.

KENYA URBAN ROADS AUTHORITY
Barabara Plaza,
Off Airport South Road,
P. O. Box, 49712 - 00100,
NAIROBI.

FINANCIER:

THE WORLD BANK

PROJECT:

HORN OF AFRICA GATEWAY DEVELOPMENT PROJECT (HOAGDP): -

Consultancy Services for the Design and Works Supervision for the Proposed Extension of Meru Bypass.

CONTRACT NO:

KeNHA/RD/CS/D/4205/2024

CONSULTANT:

egis

One Padmore Place 6th Floor,
George Padmore Road,
P. O. Box, 76672 - 00508,
NAIROBI.

DESIGN DETAILS

Action	Name	Date
Designed By:	S.A	AUG 2025
Drawn By:	J.M	AUG 2025
Checked By:	L.R	AUG 2025
Approved By:	S.O	AUG 2025

DRAWING REVISIONS

No.	Revision Details	Reviewed	Initials	Date	Approved
		By			
		Checked			
		By			
		Checked			
		By			
		Checked			
		By			
		Checked			
		By			
		Checked			

MERU BYPASS-KEMU-KAMBAKIA ROADS

JUNCTION LAYOUTS

KONGO-KAMBAKIA JUNCTION

DRAWING SCALE:

DRAWING NO:

J C T - LAY_ - 0 0 7
Doc. Type | Nature of Work | Number

SETTING OUT DATA		
POINT NUMBER	X	Y
1	348883.430	8757.792
2	348882.645	8739.253
3	348885.924	8736.271
4	348881.459	8731.421
5	348874.116	8738.223
6	348858.774	8738.892
7	348879.966	8737.300

0 20 40

E: 348800
N: 8700
E: 348900
N: 8800
E: 348900
N: 8600

2+100
2+125
2+150
2+175
2+200
2+225
2+250
2+275
0+451
0+425
0+400
R12
R12
3.25
3.25
3.25

SETTING OUT DATA		
POINT NUMBER	X	Y
1	349835.311	9437.217
2	349827.151	9450.685
3	349817.899	9449.044
4	349836.981	9458.928
5	349855.865	9466.958
6	349820.488	9454.380

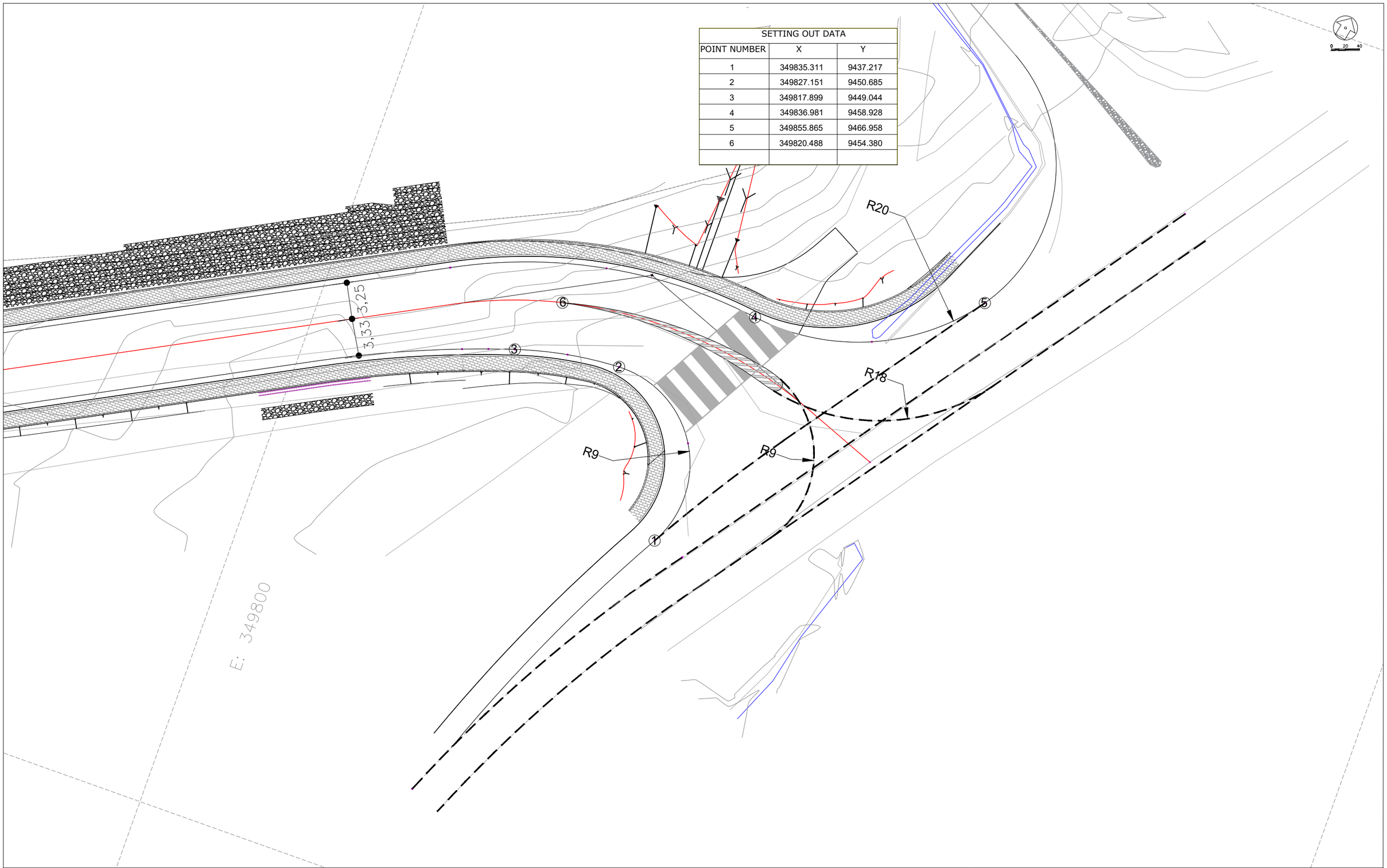

CLIENT:

KENYA NATIONAL HIGHWAY AUTHORITY
Barabara Plaza,
Off Airport South Road,
P. O. Box, 49712 - 00100,
NAIROBI.

KENYA URBAN ROADS AUTHORITY
Barabara Plaza,
Off Airport South Road,
P. O. Box, 49712 - 00100,
NAIROBI.

FINANCIER:

THE WORLD BANK

PROJECT:

HORN OF AFRICA GATEWAY DEVELOPMENT PROJECT (HOAGDP): -

Consultancy Services for the Design and Works Supervision for the Proposed Extension of Meru Bypass.

CONTRACT NO:

KeNHA/RD/CS/D/4205/2024

CONSULTANT:

egis

One Padmore Place 6th Floor,
George Padmore Road,
P. O. Box, 76672 - 00508,
NAIROBI.

DESIGN DETAILS

Action	Name	Date
Designed By:	S.A	AUG 2025
Drawn By:	J.M	AUG 2025
Checked By:	L.R	AUG 2025
Approved By:	S.O	AUG 2025

DRAWING REVISIONS

No.	Revision Details	Reviewed	Initials	Date	Approved
		By			
		Checked			
		By			
		Checked			
		By			
		Checked			
		By			
		Checked			
		By			
		Checked			

MERU BYPASS-KEMU-KAMBAKIA ROADS

JUNCTION LAYOUTS

KEMU JUNCTION

DRAWING SCALE:

DRAWING NO:

JCT - LAY - 009
Doc. Type | Nature of Work | Number

MERU BY-PASS ROADS

RUNOGONE-KAITHE ROAD JUNCTIONS LAYOUTS

SETTING OUT DATA		
POINT NUMBER	X	Y
1	350539.648	9411.039
2	350522.787	9414.344
3	350516.263	9405.778
4	350513.410	9404.778
5	350509.690	9405.067
6	350508.600	9407.100
7	350490.986	9420.577
8	350480.956	9422.543

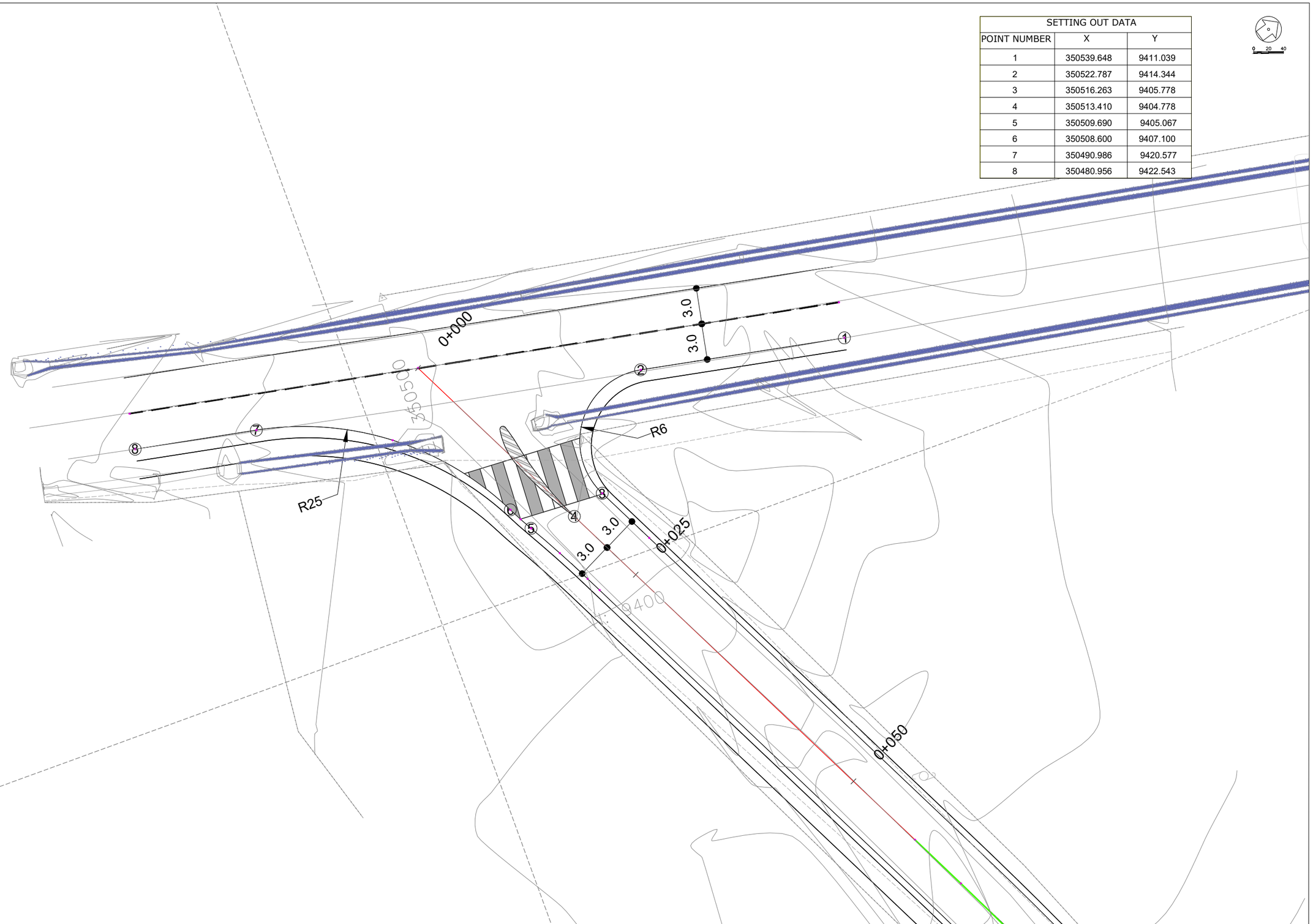

CLIENT:

KENYA NATIONAL HIGHWAY AUTHORITY
Barabara Plaza,
Off Airport South Road,
P. O. Box, 49712 - 00100,
NAIROBI.

KENYA URBAN ROADS AUTHORITY
Barabara Plaza,
Off Airport South Road,
P. O. Box, 49712 - 00100,
NAIROBI.

FINANCIER:

THE WORLD BANK

PROJECT:

HORN OF AFRICA GATEWAY DEVELOPMENT PROJECT (HOAGDP): -

Consultancy Services for the Design and Works Supervision for the Proposed Extension of Meru Bypass.

CONTRACT NO:

KeNHA/RD/CS/D/4205/2024

CONSULTANT:

egis

One Padmore Place 6th Floor,
George Padmore Road,
P. O. Box, 76672 - 00508,
NAIROBI.

DESIGN DETAILS

Action	Name	Date
Designed By:	S.A	AUG 2025
Drawn By:	J.M	AUG 2025
Checked By:	L.R	AUG 2025
Approved By:	S.O	AUG 2025

DRAWING REVISIONS

No.	Revision Details	Reviewed	Initials	Date	Approved
		By			
		Checked			
		By			
		Checked			
		By			
		Checked			
		By			
		Checked			
		By			
		Checked			

MERU BYPASS-RUNOGONE-KAITHE

JUNCTION LAYOUTS

RUNOGONE JUNCTION

DRAWING SCALE:

DRAWING NO:

J C T - LAY - 0 0 1
Doc. Type | Nature of Work | Number

SETTING OUT DATA		
POINT NUMBER	X	Y
1	351702.037	8380.941
2	351696.208	8413.436
3	351690.890	8430.377
4	351698.381	8424.206
5	351719.077	8426.987
6	351724.787	8441.207

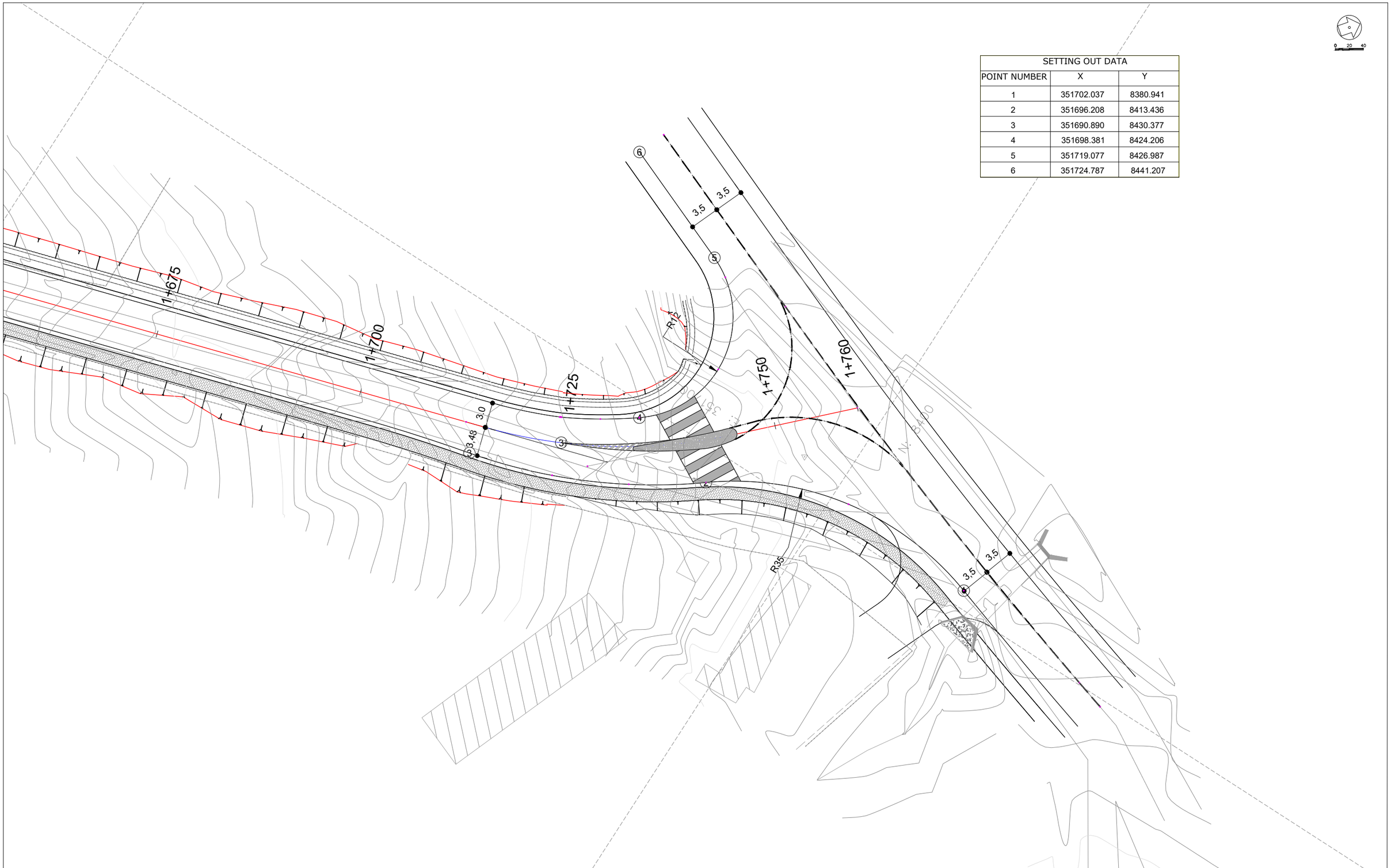

CLIENT:

KENYA NATIONAL HIGHWAY AUTHORITY
Barabara Plaza,
Off Airport South Road,
P. O. Box, 49712 - 00100,
NAIROBI.

KENYA URBAN ROADS AUTHORITY
Barabara Plaza,
Off Airport South Road,
P. O. Box, 49712 - 00100,
NAIROBI.

FINANCIER:

THE WORLD BANK

PROJECT:

HORN OF AFRICA GATEWAY DEVELOPMENT PROJECT (HOAGDP): -

Consultancy Services for the Design and Works Supervision for the Proposed Extension of Meru Bypass.

CONTRACT NO:

KeNHA/RD/CS/D/4205/2024

CONSULTANT:

egis

One Padmore Place 6th Floor,
George Padmore Road,
P. O. Box, 76672 - 00508,
NAIROBI.

DESIGN DETAILS

Action	Name	Date
Designed By:	S.A	AUG 2025
Drawn By:	J.M	AUG 2025
Checked By:	L.R	AUG 2025
Approved By:	S.O	AUG 2025

DRAWING REVISIONS

No.	Revision Details	Reviewed	Initials	Date	Approved
		By			
		Checked			
		By			
		Checked			
		By			
		Checked			
		By			
		Checked			
		By			
		Checked			

MERU BYPASS-RUNOGONE-KAITHE

JUNCTION LAYOUTS

KAITHE JUNCTION

DRAWING SCALE:

DRAWING NO:

J C T - LAY - 0 0 2
Doc. Type | Nature of Work | Number

MERU BY-PASS ROADS

HOSPITAL ROADS JUNCTIONS LAYOUTS

SETTING OUT DATA		
POINT NUMBER	X	Y
1	349956.67	5899.11
2	349946.48	5901.49
3	349942.02	5908.77
4	349941.81	5920.36
5	349935.05	5910.31
6	349927.71	5906.56
7	349912.45	5911.04

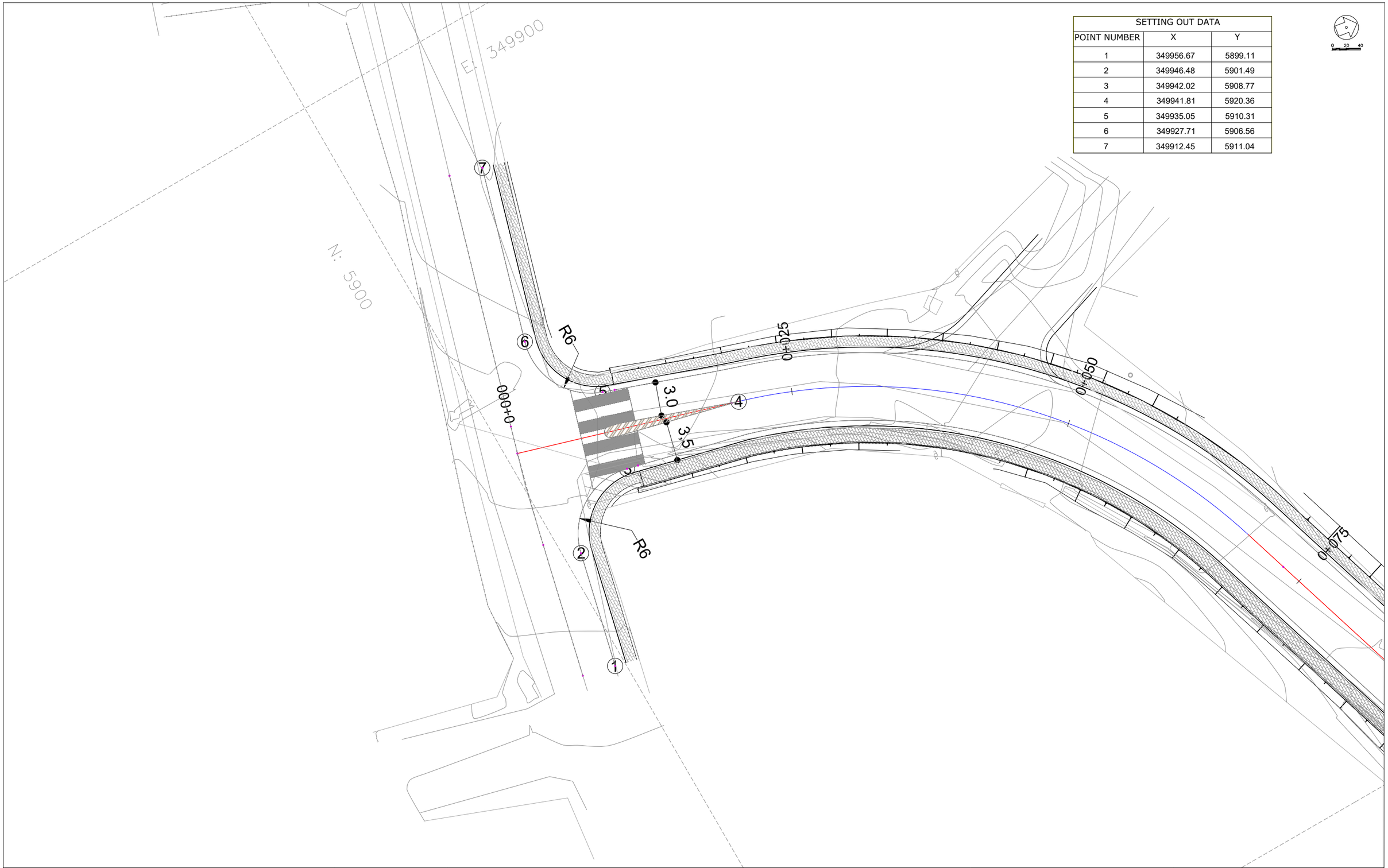

CLIENT:

KENYA NATIONAL HIGHWAY AUTHORITY
Barabara Plaza,
Off Airport South Road,
P. O. Box, 49712 - 00100,
NAIROBI.

KENYA URBAN ROADS AUTHORITY
Barabara Plaza,
Off Airport South Road,
P. O. Box, 49712 - 00100,
NAIROBI.

FINANCIER:

THE WORLD BANK

PROJECT:

HORN OF AFRICA GATEWAY DEVELOPMENT PROJECT (HOAGDP): -

Consultancy Services for the Design and Works Supervision for the Proposed Extension of Meru Bypass.

CONTRACT NO:

KeNHA/RD/CS/D/4205/2024

CONSULTANT:

One Padmore Place 6th Floor,
George Padmore Road,
P. O. Box, 76672 - 00508,
NAIROBI.

DESIGN DETAILS		
Action	Name	Date
Designed By:	S.A	AUG 2025
Drawn By:	J.M	AUG 2025
Checked By:	L.R	AUG 2025
Approved By:	S.O	AUG 2025

DRAWING REVISIONS					
No.	Revision Details	Reviewed	Initials	Date	Approved
		By			
		Checked			
		By			
		Checked			
		By			
		Checked			
		By			
		Checked			
		By			
		Checked			

MERU BYPASS-HOSPITAL ROADS

JUNCTION LAYOUTS

HOSPITAL JUNCTION

DRAWING SCALE:

DRAWING NO:

J C T - LAY - 0 0 1
Doc. Type | Nature of Work | Number

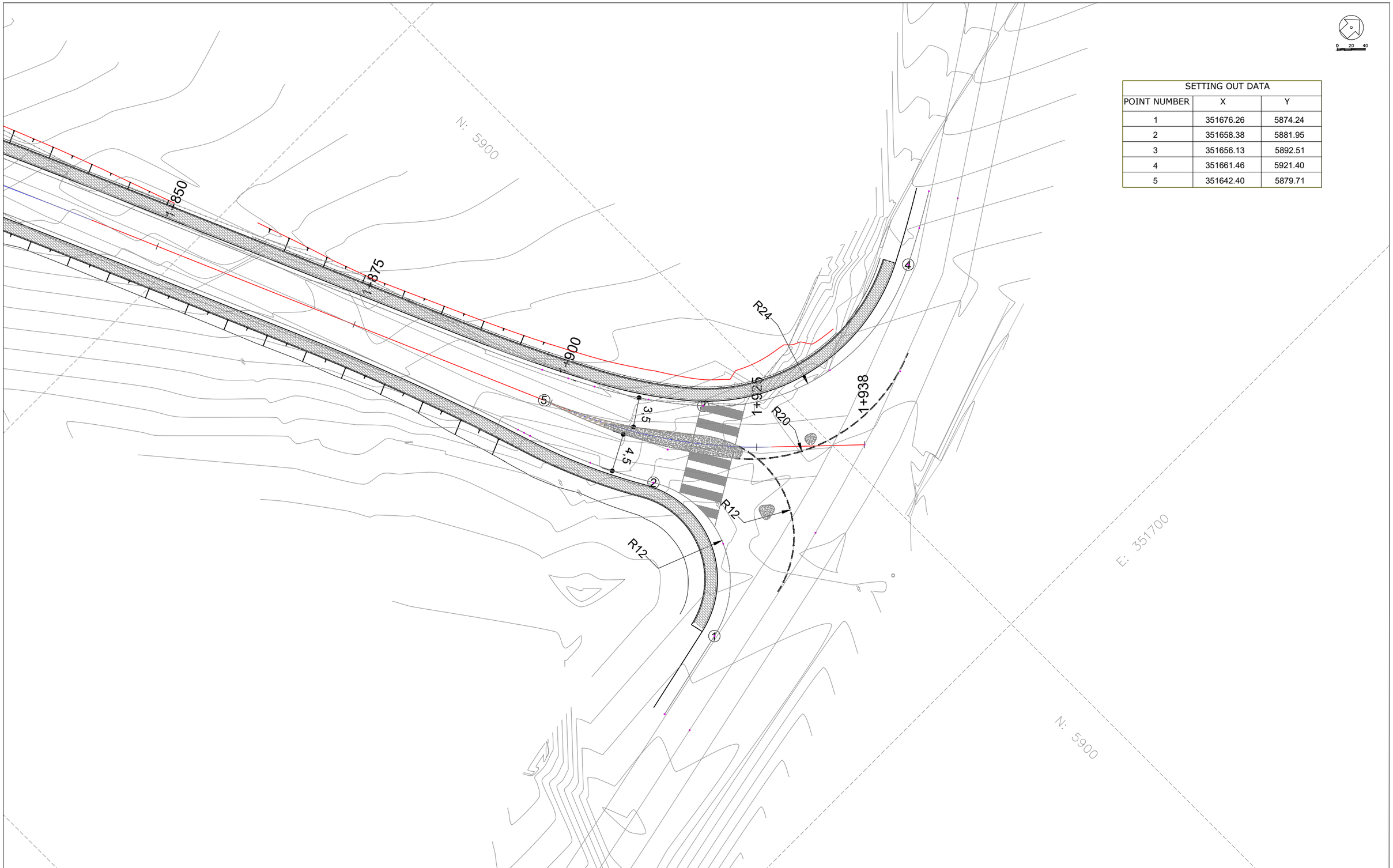

SETTING OUT DATA		
POINT NUMBER	X	Y
1	351676.26	5874.24
2	351658.38	5881.95
3	351656.13	5892.51
4	351661.46	5921.40
5	351642.40	5879.71

CLIENT:

KENYA NATIONAL HIGHWAY AUTHORITY
Barabara Plaza,
Off Airport South Road,
P. O. Box, 49712 - 00100,
NAIROBI.

KENYA URBAN ROADS AUTHORITY
Barabara Plaza,
Off Airport South Road,
P. O. Box, 49712 - 00100,
NAIROBI.

FINANCIER:

THE WORLD BANK

PROJECT:

HORN OF AFRICA GATEWAY DEVELOPMENT PROJECT (HOAGDP): -

Consultancy Services for the Design and Works Supervision for the Proposed Extension of Meru Bypass.

CONTRACT NO:

KeNHA/RD/CS/D/4205/2024

CONSULTANT:

egis

One Padmore Place 6th Floor,
George Padmore Road,
P. O. Box, 76672 - 00508,
NAIROBI.

DESIGN DETAILS

Action	Name	Date
Designed By:	S.A	AUG 2025
Drawn By:	J.M	AUG 2025
Checked By:	L.R	AUG 2025
Approved By:	S.O	AUG 2025

DRAWING REVISIONS

No.	Revision Details	Reviewed	Initials	Date	Approved
		By			
		Checked			
		By			
		Checked			
		By			
		Checked			
		By			
		Checked			
		By			
		Checked			

MERU BYPASS-HOSPITAL ROADS

JUNCTION LAYOUTS

KIRAMBURINE JUNCTION

DRAWING SCALE:

DRAWING NO:

JCT - LAY - 002
Doc. Type | Nature of Work | Number

MERU BY-PASS ROADS

WESTERN BYPASS ROADS JUNCTIONS LAYOUTS

SETTING OUT DATA		
POINT NUMBER	X	Y
1	351849.833	3476.415
2	351820.679	3494.051
3	351804.280	3500.466
4	351847.803	3482.884
5	351846.595	3489.507
6	351840.895	3508.486
7	351842.302	3518.944

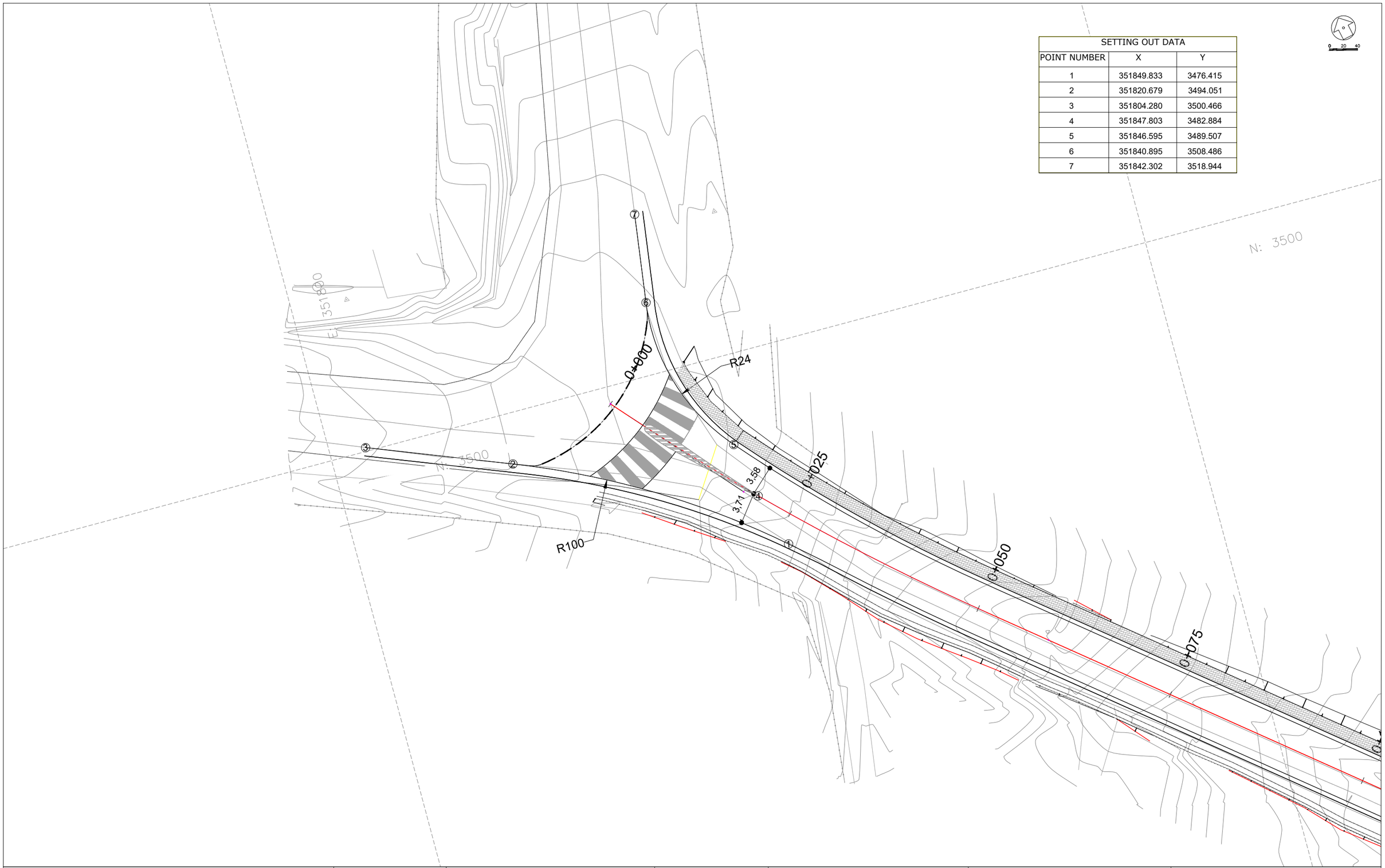

CLIENT:

KENYA NATIONAL HIGHWAY AUTHORITY
Barabara Plaza,
Off Airport South Road,
P. O. Box, 49712 - 00100,
NAIROBI.

KENYA URBAN ROADS AUTHORITY
Barabara Plaza,
Off Airport South Road,
P. O. Box, 49712 - 00100,
NAIROBI.

FINANCIER:

THE WORLD BANK

PROJECT:

HORN OF AFRICA GATEWAY DEVELOPMENT PROJECT (HOAGDP): -

Consultancy Services for the Design and Works Supervision for the Proposed Extension of Meru Bypass.

CONTRACT NO:

KeNHA/RD/CS/D/4205/2024

CONSULTANT:

egis

One Padmore Place 6th Floor,
George Padmore Road,
P. O. Box, 76672 - 00508,
NAIROBI.

DESIGN DETAILS

Action	Name	Date
Designed By:	S.A	AUG 2025
Drawn By:	J.M	AUG 2025
Checked By:	L.R	AUG 2025
Approved By:	S.O	AUG 2025

DRAWING REVISIONS

No.	Revision Details	Reviewed	Initials	Date	Approved
		By			
		Checked			
		By			
		Checked			
		By			
		Checked			
		By			
		Checked			
		By			
		Checked			

MERU BYPASS-KEMU-KAMBAKIA ROADS

JUNCTION LAYOUTS

WESTERN BYPASS- JUNCTION

DRAWING SCALE:

DRAWING NO:

JCT - LAY - 001
Doc. Type | Nature of Work | Number

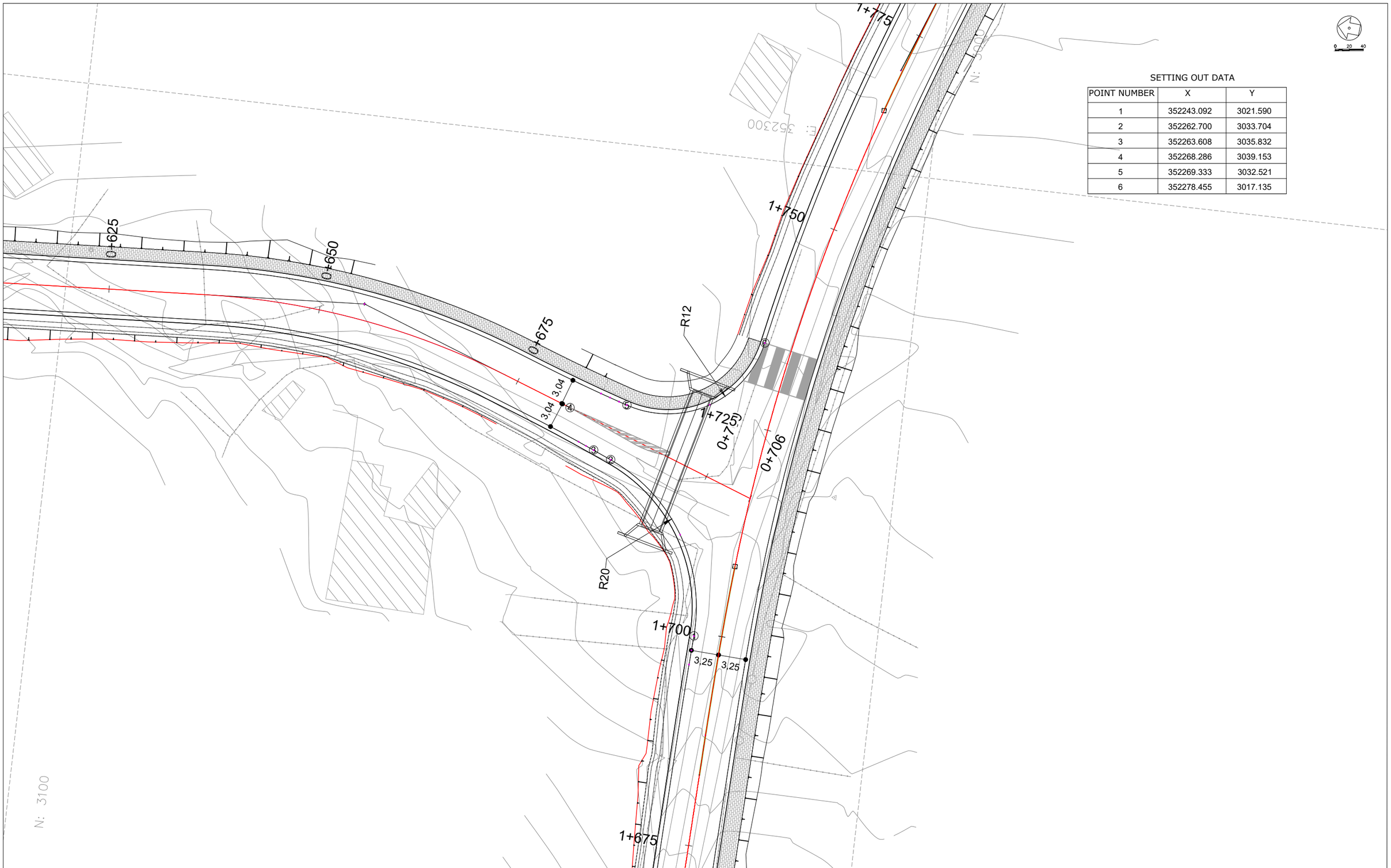

SETTING OUT DATA

POINT NUMBER	X	Y
1	352243.092	3021.590
2	352262.700	3033.704
3	352263.608	3035.832
4	352268.286	3039.153
5	352269.333	3032.521
6	352278.455	3017.135

CLIENT:

KENYA NATIONAL HIGHWAY AUTHORITY
Barabara Plaza,
Off Airport South Road,
P. O. Box, 49712 - 00100,
NAIROBI.

KENYA URBAN ROADS AUTHORITY
Barabara Plaza,
Off Airport South Road,
P. O. Box, 49712 - 00100,
NAIROBI.

FINANCIER:

THE WORLD BANK

PROJECT:

HORN OF AFRICA GATEWAY DEVELOPMENT PROJECT (HOAGDP): -

Consultancy Services for the Design and Works Supervision for the Proposed Extension of Meru Bypass.

CONTRACT NO:

KeNHA/RD/CS/D/4205/2024

CONSULTANT:

egis

One Padmore Place 6th Floor,
George Padmore Road,
P. O. Box, 76672 - 00508,
NAIROBI.

DESIGN DETAILS

Action	Name	Date
Designed By:	S.A	AUG 2025
Drawn By:	J.M	AUG 2025
Checked By:	L.R	AUG 2025
Approved By:	S.O	AUG 2025

DRAWING REVISIONS

No.	Revision Details	Reviewed	Initials	Date	Approved
		By			
		Checked			
		By			
		Checked			
		By			
		Checked			
		By			
		Checked			
		By			
		Checked			

MERU BYPASS-KEMU-KAMBAKIA ROADS

JUNCTION LAYOUTS

LINK JUNCTION

DRAWING SCALE:

DRAWING NO:

J C T - LAY - 0 0 2
Doc. Type | Nature of Work | Number

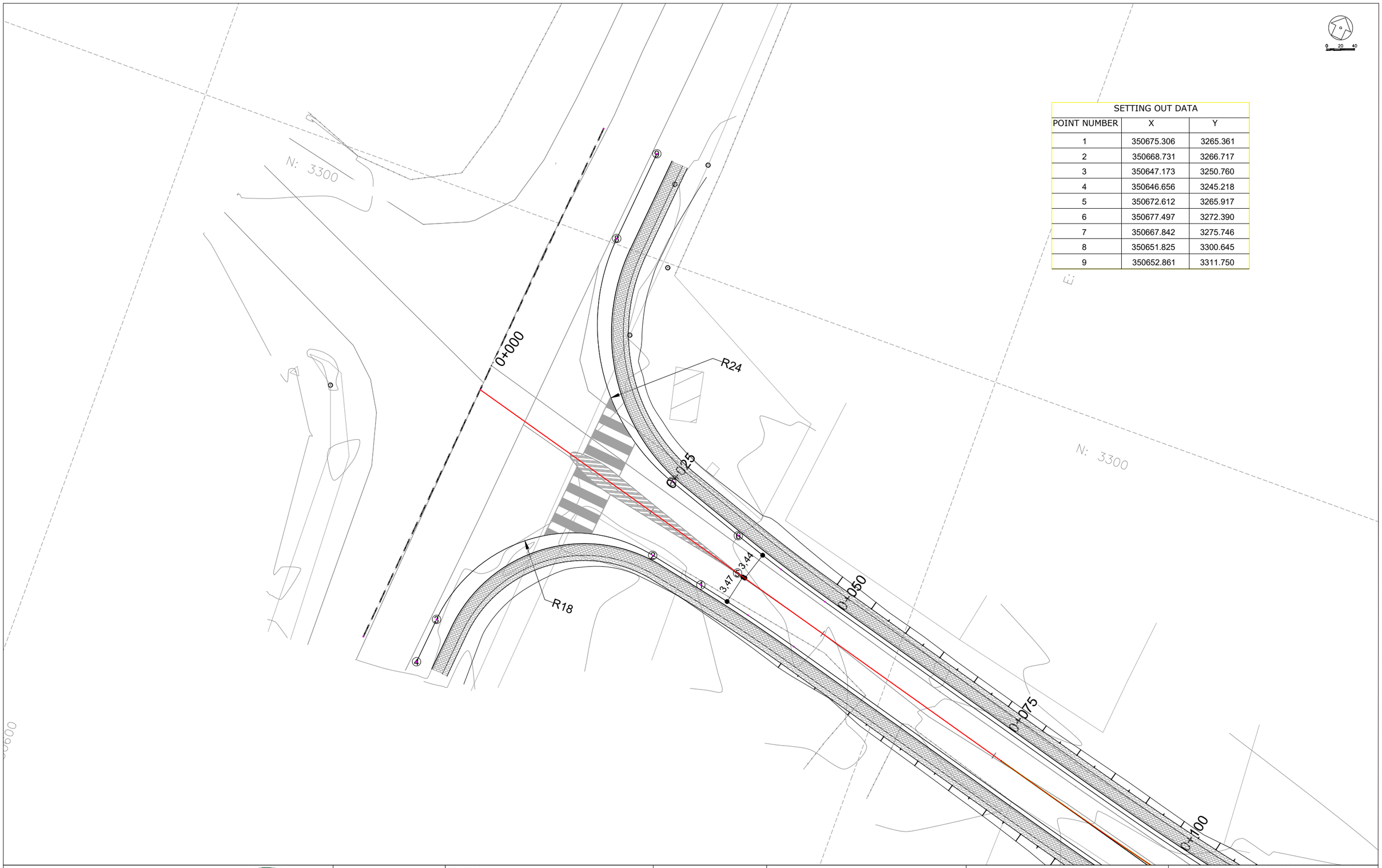

SETTING OUT DATA		
POINT NUMBER	X	Y
1	350675.306	3265.361
2	350668.731	3266.717
3	350647.173	3250.760
4	350646.656	3245.218
5	350672.612	3265.917
6	350677.497	3272.390
7	350667.842	3275.746
8	350651.825	3300.645
9	350652.861	3311.750

CLIENT:

KENYA NATIONAL HIGHWAY AUTHORITY
Barabara Plaza,
Off Airport South Road,
P. O. Box, 49712 - 00100,
NAIROBI.

KENYA URBAN ROADS AUTHORITY
Barabara Plaza,
Off Airport South Road,
P. O. Box, 49712 - 00100,
NAIROBI.

FINANCIER:

THE WORLD BANK

PROJECT:

HORN OF AFRICA GATEWAY DEVELOPMENT PROJECT (HOAGDP): -

Consultancy Services for the Design and Works Supervision for the Proposed Extension of Meru Bypass.

CONTRACT NO:

KeNHA/RD/CS/D/4205/2024

CONSULTANT:

egis

One Padmore Place 6th Floor,
George Padmore Road,
P. O. Box, 76672 - 00508,
NAIROBI.

DESIGN DETAILS		
Action	Name	Date
Designed By:	S.A	AUG 2025
Drawn By:	J.M	AUG 2025
Checked By:	L.R	AUG 2025
Approved By:	S.O	AUG 2025

DRAWING REVISIONS					
No.	Revision Details	Reviewed	Initials	Date	Approved
		By			
		Checked			
		By			
		Checked			
		By			
		Checked			
		By			
		Checked			
		By			
		Checked			

MERU BYPASS-KEMU-KAMBAKIA ROADS

JUNCTION LAYOUTS

GIKUMENE JUNCTION

DRAWING SCALE:

DRAWING NO:

JCT - LAY - 003
Doc. Type | Nature of Work | Number

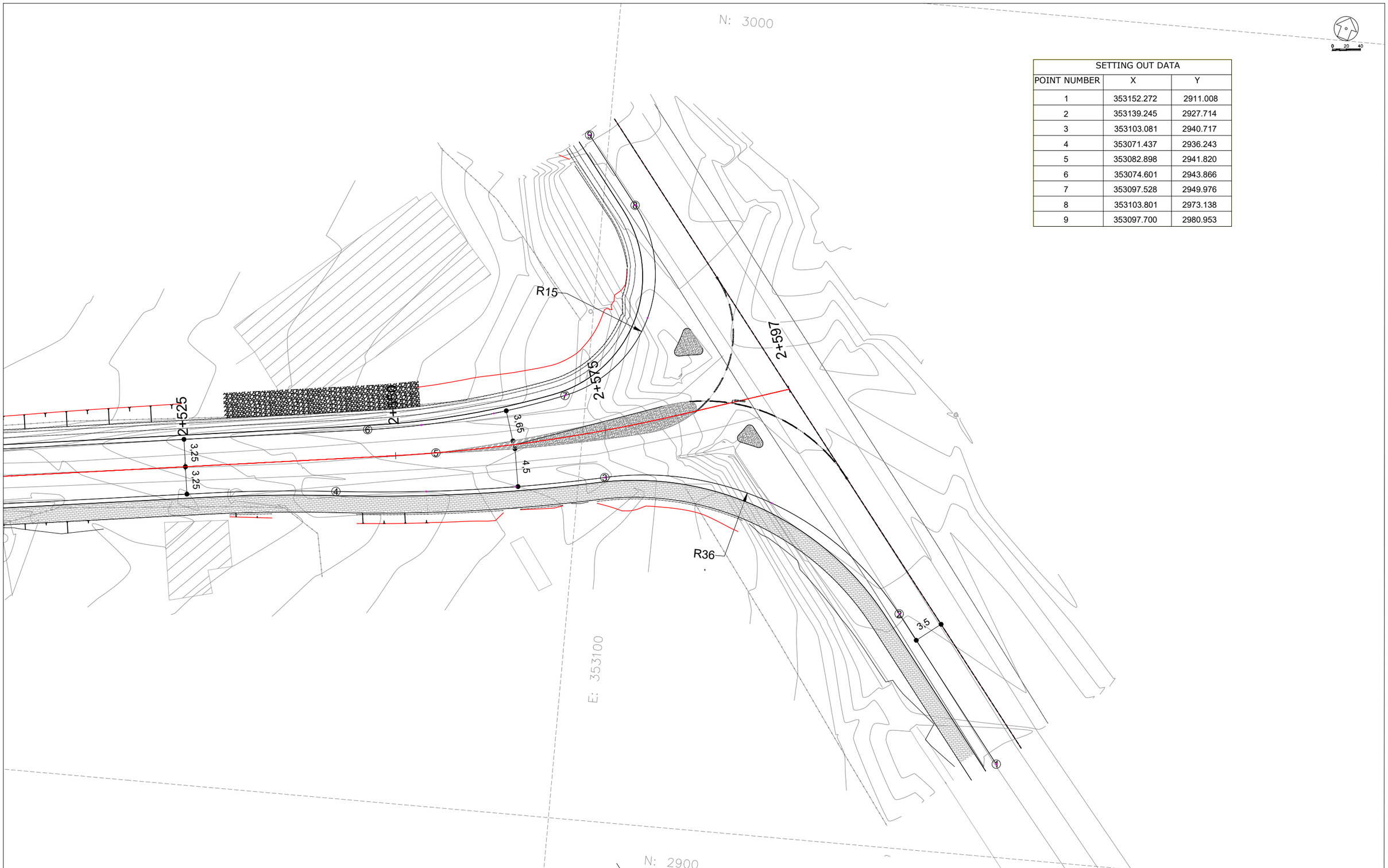

SETTING OUT DATA		
POINT NUMBER	X	Y
1	353152.272	2911.008
2	353139.245	2927.714
3	353103.081	2940.717
4	353071.437	2936.243
5	353082.898	2941.820
6	353074.601	2943.866
7	353097.528	2949.976
8	353103.801	2973.138
9	353097.700	2980.953

CLIENT:

KENYA NATIONAL HIGHWAY AUTHORITY
Barabara Plaza,
Off Airport South Road,
P. O. Box, 49712 - 00100,
NAIROBI.

KENYA URBAN ROADS AUTHORITY
Barabara Plaza,
Off Airport South Road,
P. O. Box, 49712 - 00100,
NAIROBI.

FINANCIER:

THE WORLD BANK

PROJECT:

HORN OF AFRICA GATEWAY DEVELOPMENT PROJECT (HOAGDP): -

Consultancy Services for the Design and Works Supervision for the Proposed Extension of Meru Bypass.

CONTRACT NO:

KeNHA/RD/CS/D/4205/2024

CONSULTANT:

egis

One Padmore Place 6th Floor,
George Padmore Road,
P. O. Box, 76672 - 00508,
NAIROBI.

DESIGN DETAILS

Action	Name	Date
Designed By:	S.A	AUG 2025
Drawn By:	J.M	AUG 2025
Checked By:	L.R	AUG 2025
Approved By:	S.O	AUG 2025

DRAWING REVISIONS

No.	Revision Details	Reviewed	Initials	Date	Approved
		By			
		Checked			
		By			
		Checked			
		By			
		Checked			
		By			
		Checked			
		By			
		Checked			

MERU BYPASS-KEMU-KAMBAKIA ROADS

JUNCTION LAYOUTS

MATE RD-JUNCTION

DRAWING SCALE:

DRAWING NO:

J C T - LAY - 0 0 4
Doc. Type | Nature of Work | Number

MERU BY-PASS ROADS

ROAD SIGNS LAYOUTS

MERU BY-PASS ROADS

1. KEMU-KAMBAKIA ROADS

ROAD SIGNS LAYOUT

1.1. 3 STEERS - KAMBAKIA ROAD

ROAD SIGNS LAYOUT

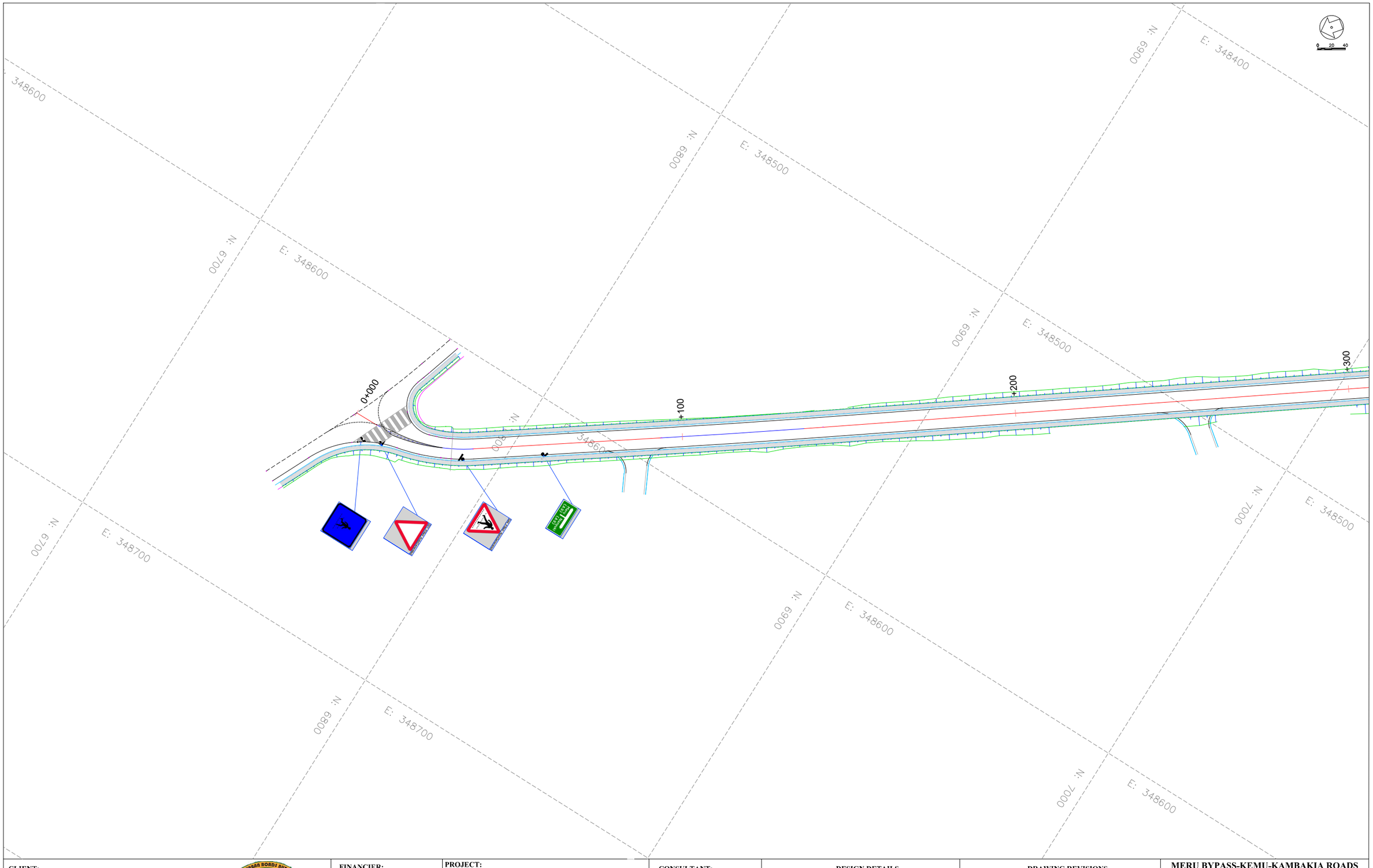

CLIENT:

KENYA NATIONAL HIGHWAY AUTHORITY
Barabara Plaza,
Off Airport South Road,
P. O. Box, 49712 - 00100,
NAIROBI.

KENYA URBAN ROADS AUTHORITY
Barabara Plaza,
Off Airport South Road,
P. O. Box, 49712 - 00100,
NAIROBI.

FINANCIER:

THE WORLD BANK

PROJECT:

HORN OF AFRICA GATEWAY DEVELOPMENT PROJECT (HOAGDP): -

Consultancy Services for the Design and Works Supervision for the Proposed Extension of Meru Bypass.

CONTRACT NO:

KeNHA/RD/CS/D/4205/2024

CONSULTANT:

egis

One Padmore Place 6th Floor,
George Padmore Road,
P. O. Box, 76672 - 00508,
NAIROBI.

DESIGN DETAILS

Action	Name	Date
Designed By:	S.A	AUG 2025
Drawn By:	J.M	AUG 2025
Checked By:	L.R	AUG 2025
Approved By:	S.O	AUG 2025

DRAWING REVISIONS

No.	Revision Details	Reviewed	Initials	Date	Approved
		By			
		Checked			
		By			
		Checked			
		By			
		Checked			
		By			
		Checked			
		By			
		Checked			

MERU BYPASS-KEMU-KAMBAKIA ROADS

ROAD SIGNS LAYOUT

ROAD: 3-STEERS - KAMBAKIA

CH 0+000 - CH 0+200

DRAWING SCALE:

H: 1:500
V: 1:50

DRAWING NO:

R S L - 3S/KAM - 0 0 1
Doc. Type | Nature of Work | Number

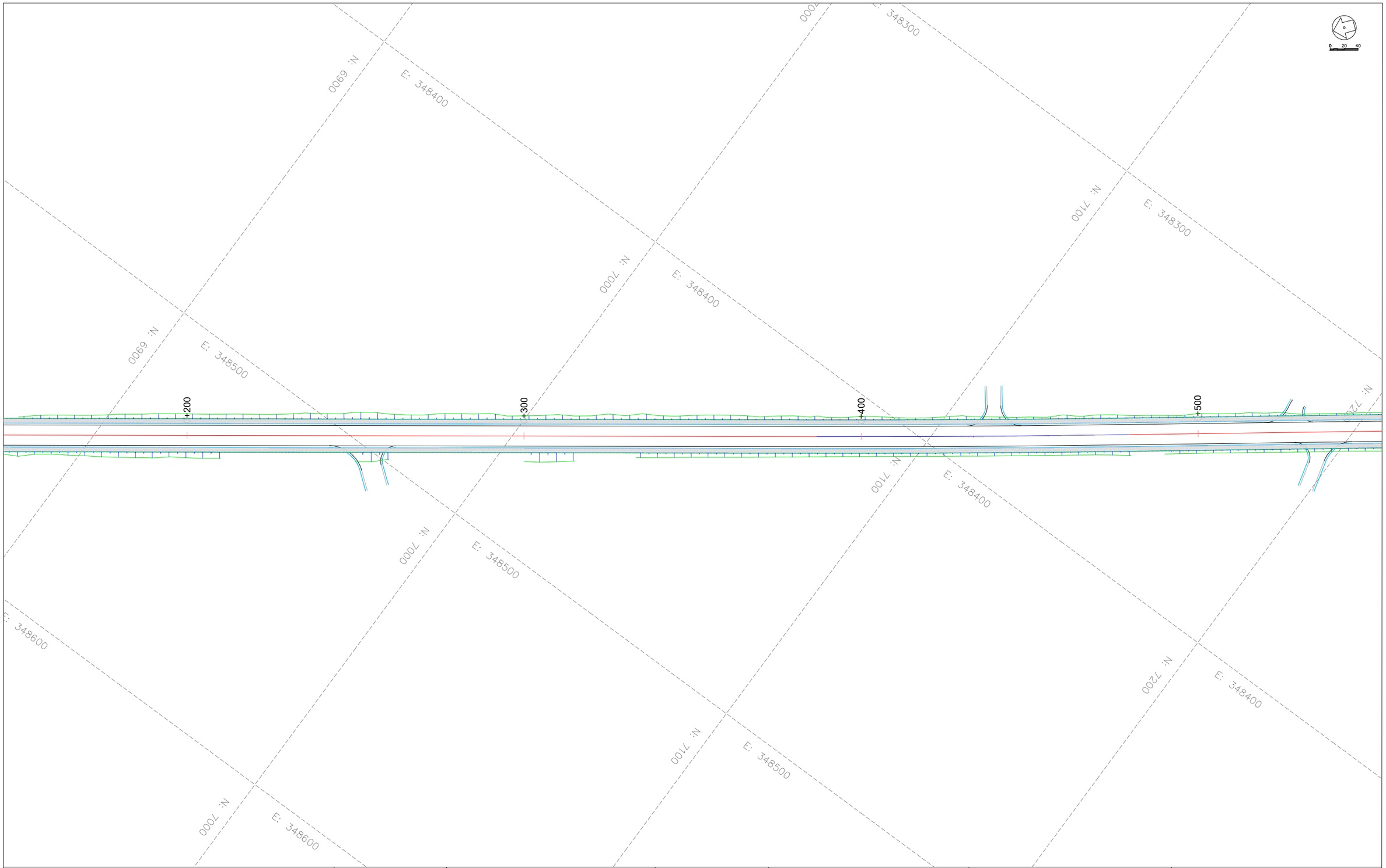

CLIENT:

KENYA NATIONAL HIGHWAY AUTHORITY
Barabara Plaza,
Off Airport South Road,
P. O. Box, 49712 - 00100,
NAIROBI.

KENYA URBAN ROADS AUTHORITY
Barabara Plaza,
Off Airport South Road,
P. O. Box, 49712 - 00100,
NAIROBI.

FINANCIER:

THE WORLD BANK

PROJECT:

HORN OF AFRICA GATEWAY DEVELOPMENT PROJECT (HOAGDP): -

Consultancy Services for the Design and Works Supervision for the Proposed Extension of Meru Bypass.

CONTRACT NO:

KeNHA/RD/CS/D/4205/2024

CONSULTANT:

egis

One Padmore Place 6th Floor,
George Padmore Road,
P. O. Box, 76672 - 00508,
NAIROBI.

DESIGN DETAILS

Action	Name	Date
Designed By:	S.A	AUG 2025
Drawn By:	J.M	AUG 2025
Checked By:	L.R	AUG 2025
Approved By:	S.O	AUG 2025

DRAWING REVISIONS

No.	Revision Details	Reviewed	Initials	Date	Approved
		By			
		Checked			
		By			
		Checked			
		By			
		Checked			
		By			
		Checked			
		By			
		Checked			

MERU BYPASS-KEMU-KAMBAKIA ROADS

ROAD SIGNS LAYOUT

ROAD: 3-STEERS - KAMBAKIA

CH 0+200 - CH 0+500

DRAWING SCALE:

H: 1:500
V: 1:50

DRAWING NO:

RSL - 3S/KAM - 002
Doc. Type | Nature of Work | Number

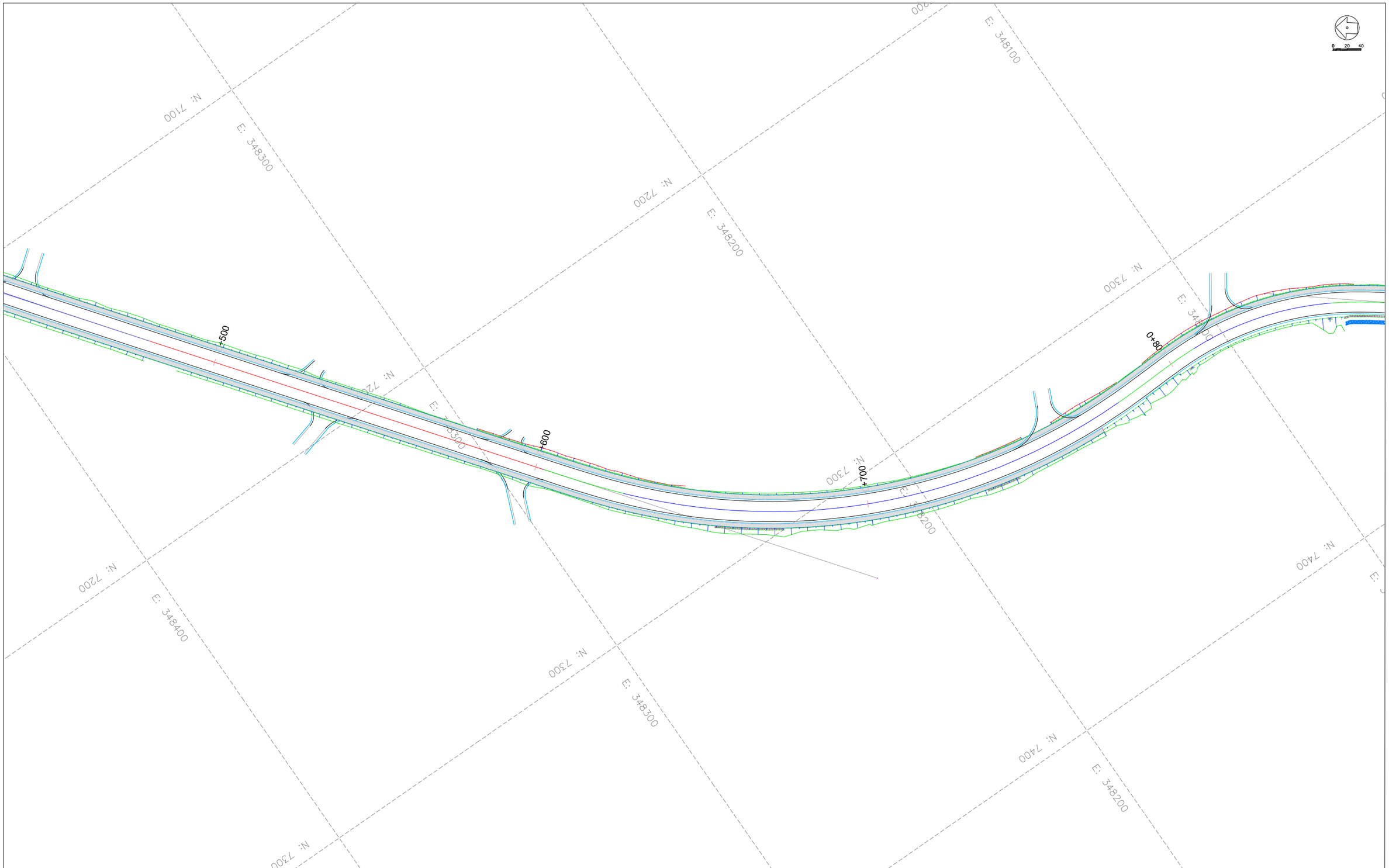

CLIENT:

KENYA NATIONAL HIGHWAY AUTHORITY
Barabara Plaza,
Off Airport South Road,
P. O. Box, 49712 - 00100,
NAIROBI.

KENYA URBAN ROADS AUTHORITY
Barabara Plaza,
Off Airport South Road,
P. O. Box, 49712 - 00100,
NAIROBI.

FINANCIER:

THE WORLD BANK

PROJECT:

HORN OF AFRICA GATEWAY DEVELOPMENT PROJECT (HOAGDP): -

Consultancy Services for the Design and Works Supervision for the Proposed Extension of Meru Bypass.

CONTRACT NO:

KeNHA/RD/CS/D/4205/2024

CONSULTANT:

egis

One Padmore Place 6th Floor,
George Padmore Road,
P. O. Box, 76672 - 00508,
NAIROBI.

DESIGN DETAILS

Action	Name	Date
Designed By:	S.A	AUG 2025
Drawn By:	J.M	AUG 2025
Checked By:	L.R	AUG 2025
Approved By:	S.O	AUG 2025

DRAWING REVISIONS

No.	Revision Details	Reviewed	Initials	Date	Approved
		By			
		Checked			
		By			
		Checked			
		By			
		Checked			
		By			
		Checked			
		By			
		Checked			

MERU BYPASS-KEMU-KAMBAKIA ROADS

ROAD SIGNS LAYOUT

ROAD: 3-STEERS - KAMBAKIA

CH 0+500 - CH 0+800

DRAWING SCALE:

H: 1:500
V: 1:50

DRAWING NO:

RSL - 3S/KAM - 003
Doc. Type | Nature of Work | Number

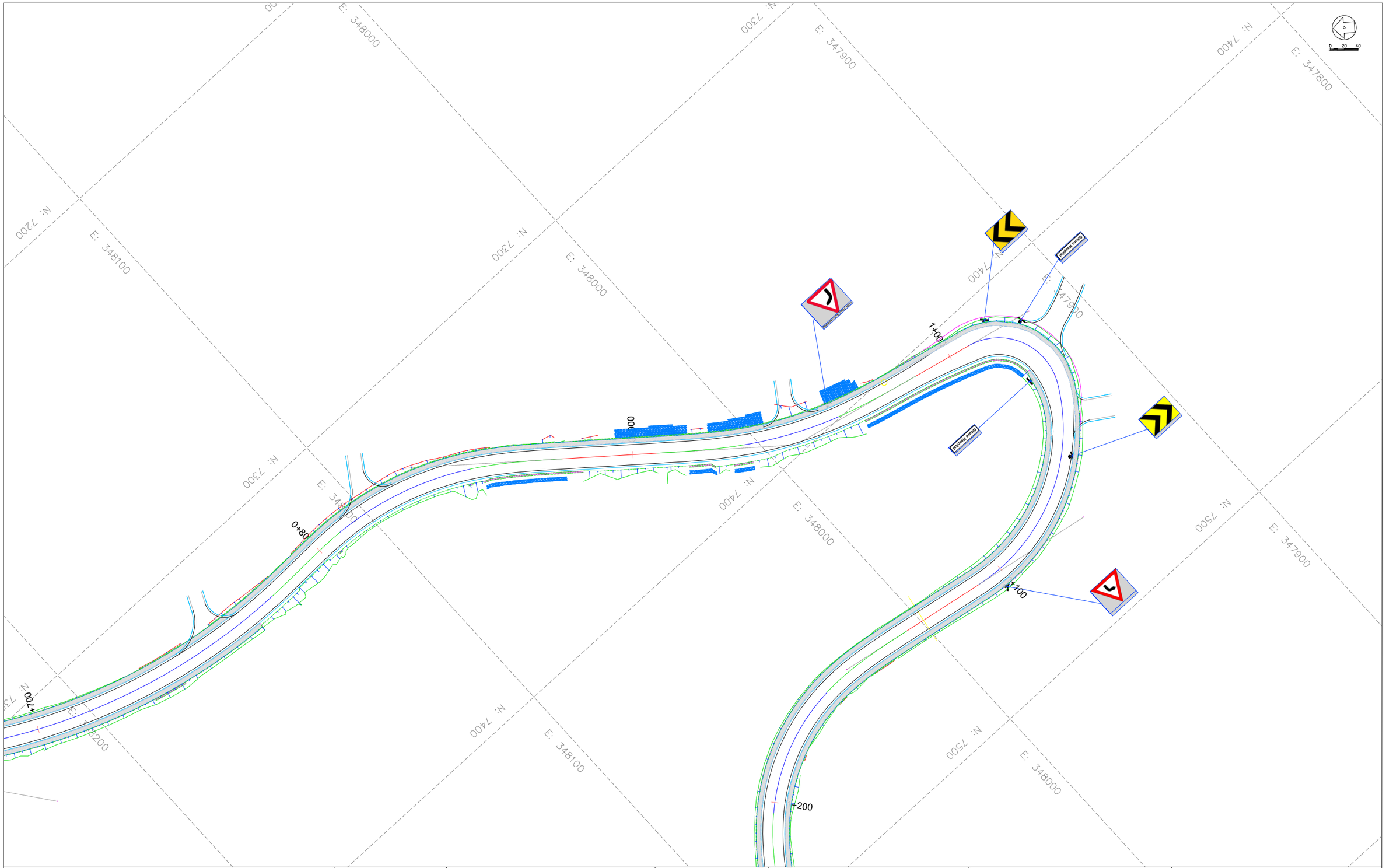

CLIENT:

KENYA NATIONAL HIGHWAY AUTHORITY
Barabara Plaza,
Off Airport South Road,
P. O. Box, 49712 - 00100,
NAIROBI.

KENYA URBAN ROADS AUTHORITY
Barabara Plaza,
Off Airport South Road,
P. O. Box, 49712 - 00100,
NAIROBI.

FINANCIER:

THE WORLD BANK

PROJECT:

HORN OF AFRICA GATEWAY DEVELOPMENT PROJECT (HOAGDP): -

Consultancy Services for the Design and Works Supervision for the Proposed Extension of Meru Bypass.

CONTRACT NO:

KeNHA/RD/CS/D/4205/2024

CONSULTANT:

egis

One Padmore Place 6th Floor,
George Padmore Road,
P. O. Box, 76672 - 00508,
NAIROBI.

DESIGN DETAILS

Action	Name	Date
Designed By:	S.A	AUG 2025
Drawn By:	J.M	AUG 2025
Checked By:	L.R	AUG 2025
Approved By:	S.O	AUG 2025

DRAWING REVISIONS

No.	Revision Details	Reviewed	Initials	Date	Approved
		By			
		Checked			
		By			
		Checked			
		By			
		Checked			
		By			
		Checked			
		By			
		Checked			

MERU BYPASS-KEMU-KAMBAKIA ROADS

ROAD SIGNS LAYOUT

ROAD: 3-STEERS - KAMBAKIA

CH 0+800 - CH 1+100

DRAWING SCALE:

H: 1:500
V: 1:50

DRAWING NO:

RSL - 3S/KAM - 004
Doc. Type | Nature of Work | Number

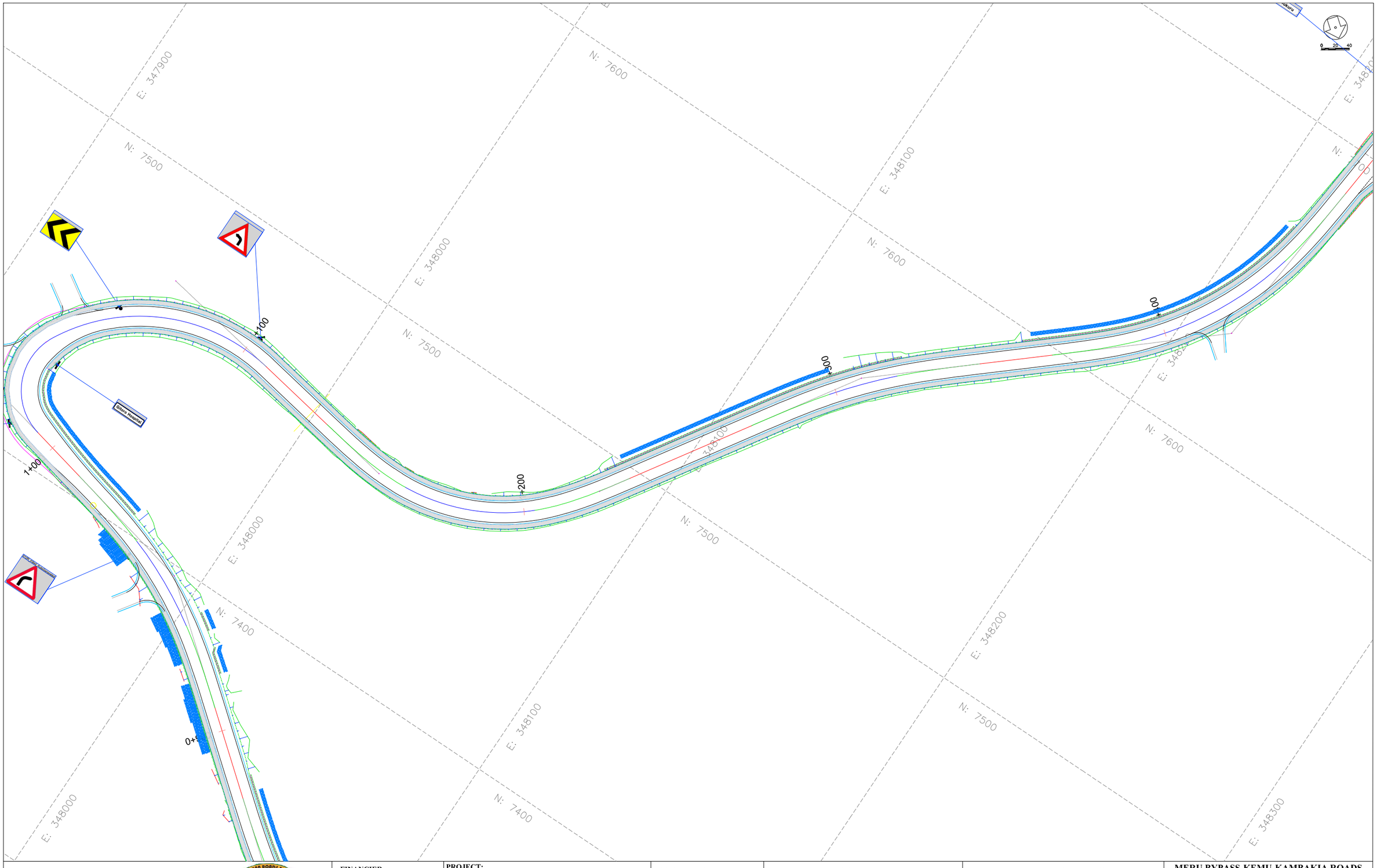

CLIENT:

KENYA NATIONAL HIGHWAY AUTHORITY
Barabara Plaza,
Off Airport South Road,
P. O. Box, 49712 - 00100,
NAIROBI.

KENYA URBAN ROADS AUTHORITY
Barabara Plaza,
Off Airport South Road,
P. O. Box, 49712 - 00100,
NAIROBI.

FINANCIER:

THE WORLD BANK

PROJECT:

HORN OF AFRICA GATEWAY DEVELOPMENT PROJECT (HOAGDP): -

Consultancy Services for the Design and Works Supervision for the Proposed Extension of Meru Bypass.

CONTRACT NO:

KeNHA/RD/CS/D/4205/2024

CONSULTANT:

egis

One Padmore Place 6th Floor,
George Padmore Road,
P. O. Box, 76672 - 00508,
NAIROBI.

DESIGN DETAILS

Action	Name	Date
Designed By:	S.A	AUG 2025
Drawn By:	J.M	AUG 2025
Checked By:	L.R	AUG 2025
Approved By:	S.O	AUG 2025

DRAWING REVISIONS

No.	Revision Details	Reviewed	Initials	Date	Approved
		By			
		Checked			
		By			
		Checked			
		By			
		Checked			
		By			
		Checked			
		By			
		Checked			

MERU BYPASS-KEMU-KAMBAKIA ROADS

ROAD SIGNS LAYOUT

ROAD: 3-STEERS - KAMBAKIA

CH 1+100 - CH 1+400

DRAWING SCALE:

H: 1:500
V: 1:50

DRAWING NO:

R S L - 3S/KAM - 0 0 5
Doc. Type | Nature of Work | Number

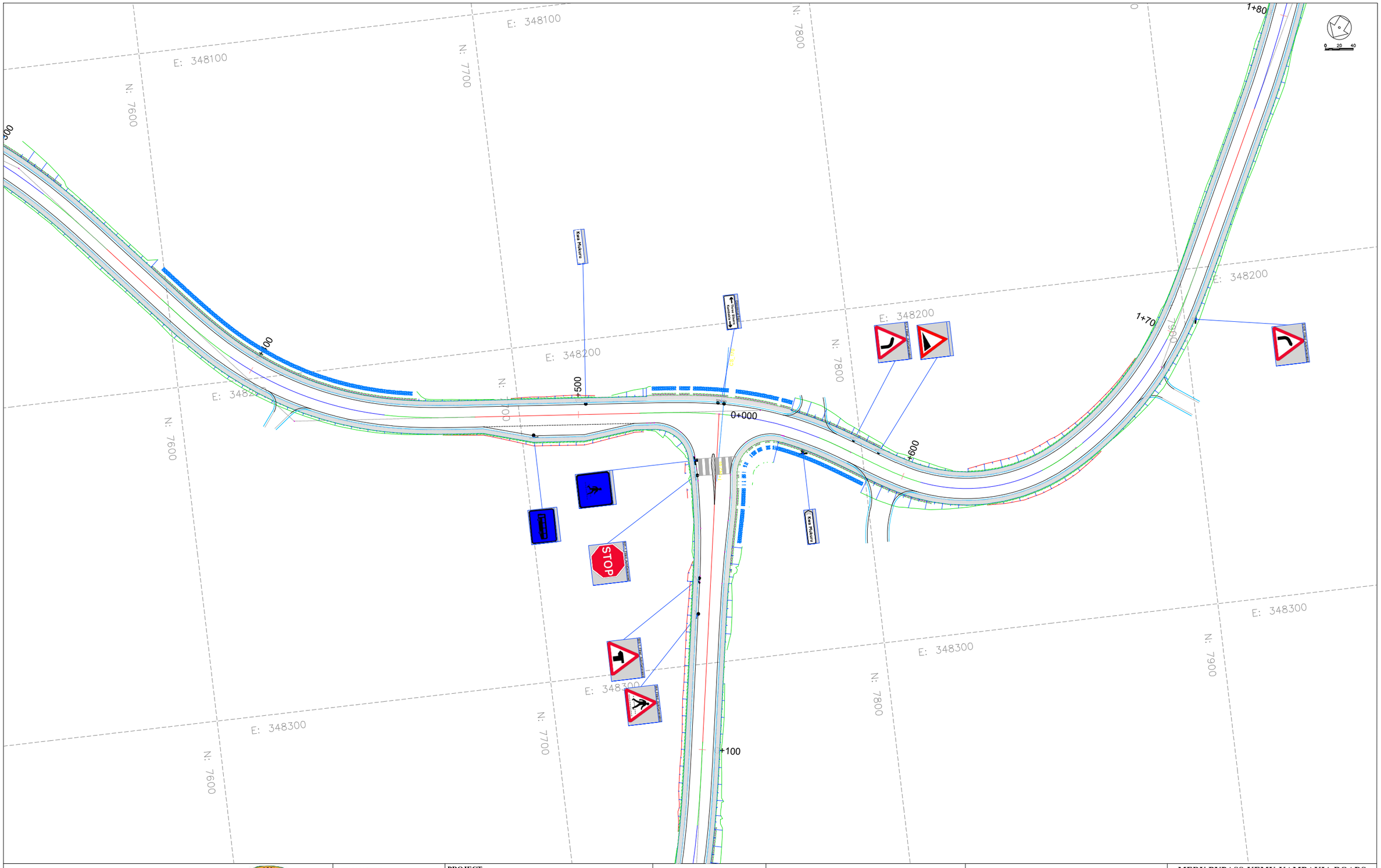

CLIENT:

KENYA NATIONAL HIGHWAY AUTHORITY
Barabara Plaza,
Off Airport South Road,
P. O. Box, 49712 - 00100,
NAIROBI.

KENYA URBAN ROADS AUTHORITY
Barabara Plaza,
Off Airport South Road,
P. O. Box, 49712 - 00100,
NAIROBI.

FINANCIER:

THE WORLD BANK

PROJECT:

HORN OF AFRICA GATEWAY DEVELOPMENT PROJECT (HOAGDP): -

Consultancy Services for the Design and Works Supervision for the Proposed Extension of Meru Bypass.

CONTRACT NO:

KeNHA/RD/CS/D/4205/2024

CONSULTANT:

egis

One Padmore Place 6th Floor,
George Padmore Road,
P. O. Box, 76672 - 00508,
NAIROBI.

DESIGN DETAILS

Action	Name	Date
Designed By:	S.A	AUG 2025
Drawn By:	J.M	AUG 2025
Checked By:	L.R	AUG 2025
Approved By:	S.O	AUG 2025

DRAWING REVISIONS

No.	Revision Details	Reviewed	Initials	Date	Approved
		By			
		Checked			
		By			
		Checked			
		By			
		Checked			
		By			
		Checked			
		By			
		Checked			

MERU BYPASS-KEMU-KAMBAKIA ROADS

ROAD SIGNS LAYOUT

ROAD: 3-STEERS - KAMBAKIA

CH 1+400 - CH 1+700

DRAWING SCALE:

H: 1:500
V: 1:50

DRAWING NO:

RSL - 3S/KAM - 006
Doc. Type | Nature of Work | Number

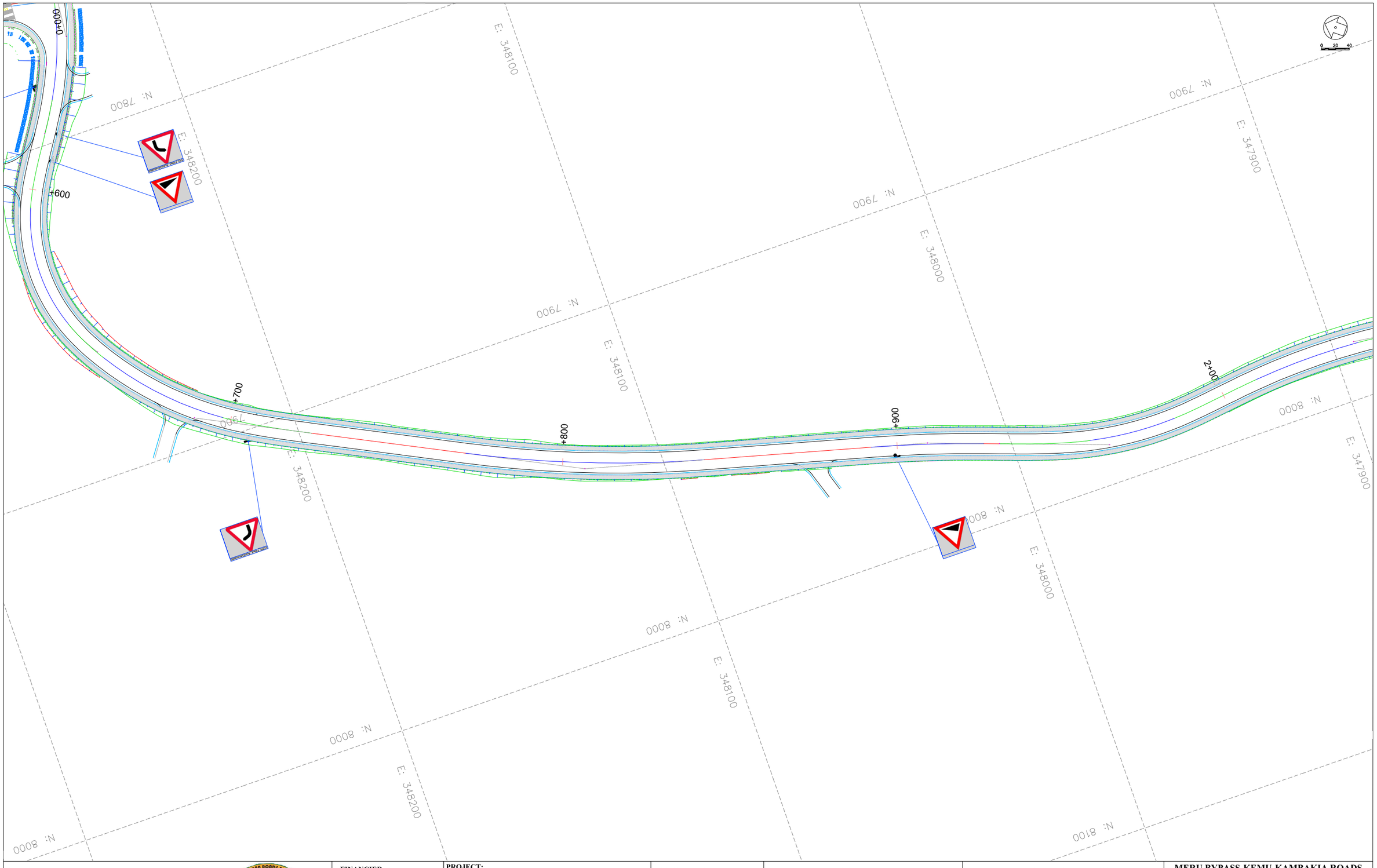

CLIENT:

KENYA NATIONAL HIGHWAY AUTHORITY
Barabara Plaza,
Off Airport South Road,
P. O. Box, 49712 - 00100,
NAIROBI.

KENYA URBAN ROADS AUTHORITY
Barabara Plaza,
Off Airport South Road,
P. O. Box, 49712 - 00100,
NAIROBI.

FINANCIER:

THE WORLD BANK

PROJECT:

HORN OF AFRICA GATEWAY DEVELOPMENT PROJECT (HOAGDP): -

Consultancy Services for the Design and Works Supervision for the Proposed Extension of Meru Bypass.

CONTRACT NO:

KeNHA/RD/CS/D/4205/2024

CONSULTANT:

One Padmore Place 6th Floor,
George Padmore Road,
P. O. Box, 76672 - 00508,
NAIROBI.

DESIGN DETAILS

Action	Name	Date
Designed By:	S.A	AUG 2025
Drawn By:	J.M	AUG 2025
Checked By:	L.R	AUG 2025
Approved By:	S.O	AUG 2025

DRAWING REVISIONS

No.	Revision Details	Reviewed	Initials	Date	Approved
		By			
		Checked			
		By			
		Checked			
		By			
		Checked			
		By			
		Checked			
		By			
		Checked			

MERU BYPASS-KEMU-KAMBAKIA ROADS

ROAD SIGNS LAYOUT

ROAD: 3-STEERS - KAMBAKIA

CH 1+700 - CH 2+000

DRAWING SCALE:

H: 1:500
V: 1:50

DRAWING NO:

RSL - 3S/KAM - 007
Doc. Type | Nature of Work | Number

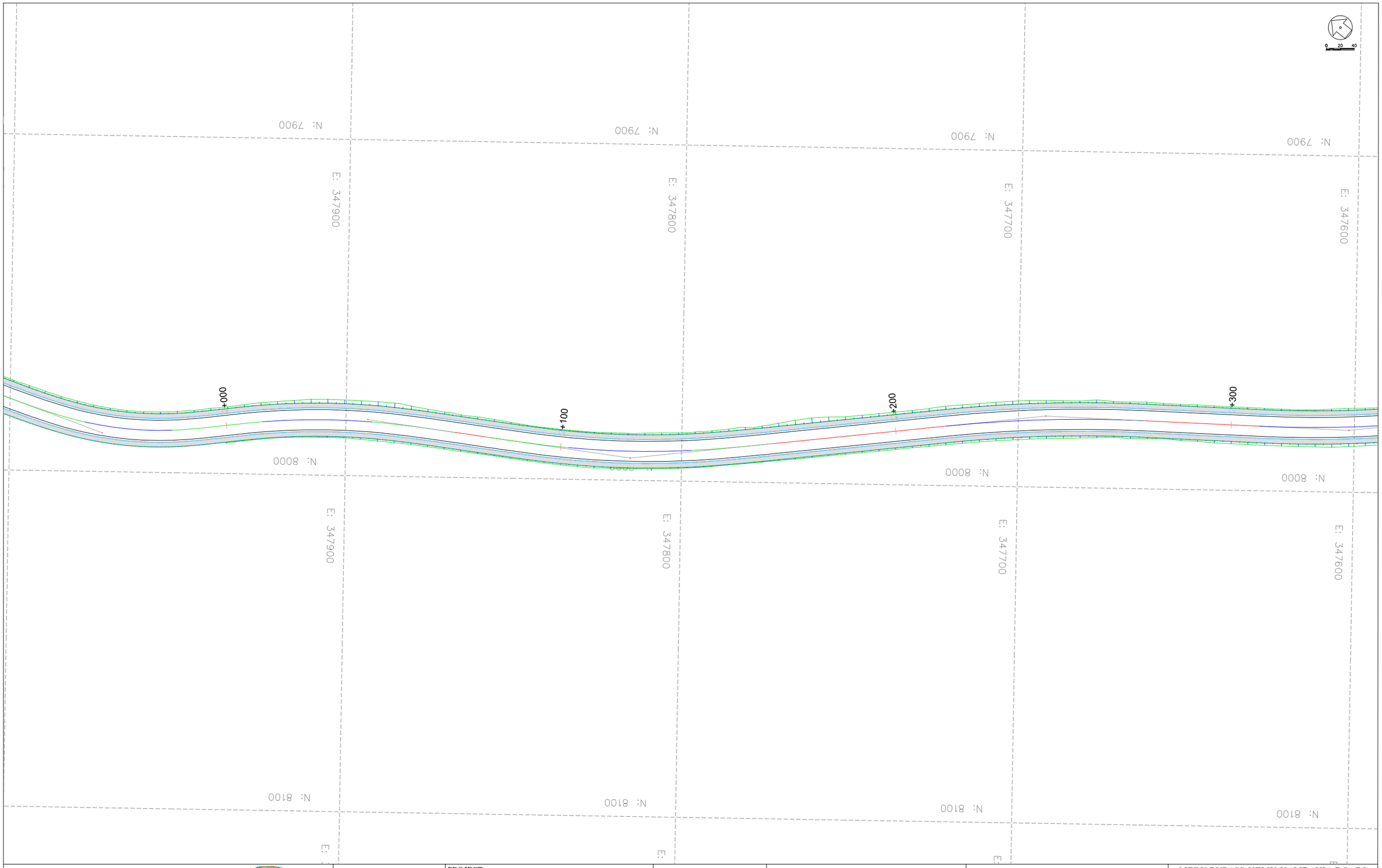

CLIENT:

KENYA NATIONAL HIGHWAY AUTHORITY
Barabara Plaza,
Off Airport South Road,
P. O. Box, 49712 - 00100,
NAIROBI.

KENYA URBAN ROADS AUTHORITY
Barabara Plaza,
Off Airport South Road,
P. O. Box, 49712 - 00100,
NAIROBI.

FINANCIER:

THE WORLD BANK

PROJECT:

HORN OF AFRICA GATEWAY DEVELOPMENT PROJECT (HOAGDP): -

Consultancy Services for the Design and Works Supervision for the Proposed Extension of Meru Bypass.

CONTRACT NO:

KeNHA/RD/CS/D/4205/2024

CONSULTANT:

One Padmore Place 6th Floor,
George Padmore Road,
P. O. Box, 76672 - 00508,
NAIROBI.

DESIGN DETAILS

Action	Name	Date
Designed By:	S.A	AUG 2025
Drawn By:	J.M	AUG 2025
Checked By:	L.R	AUG 2025
Approved By:	S.O	AUG 2025

DRAWING REVISIONS

No.	Revision Details	Reviewed	Initials	Date	Approved
		By			
		Checked			
		By			
		Checked			
		By			
		Checked			
		By			
		Checked			
		By			
		Checked			

MERU BYPASS-KEMU-KAMBAKIA ROADS

ROAD SIGNS LAYOUT

ROAD: 3-STEERS - KAMBAKIA

CH 2+000 - CH 2+300

DRAWING SCALE:

H: 1:500
V: 1:50

DRAWING NO:

RSL - 3S/KAM - 008
Doc. Type | Nature of Work | Number

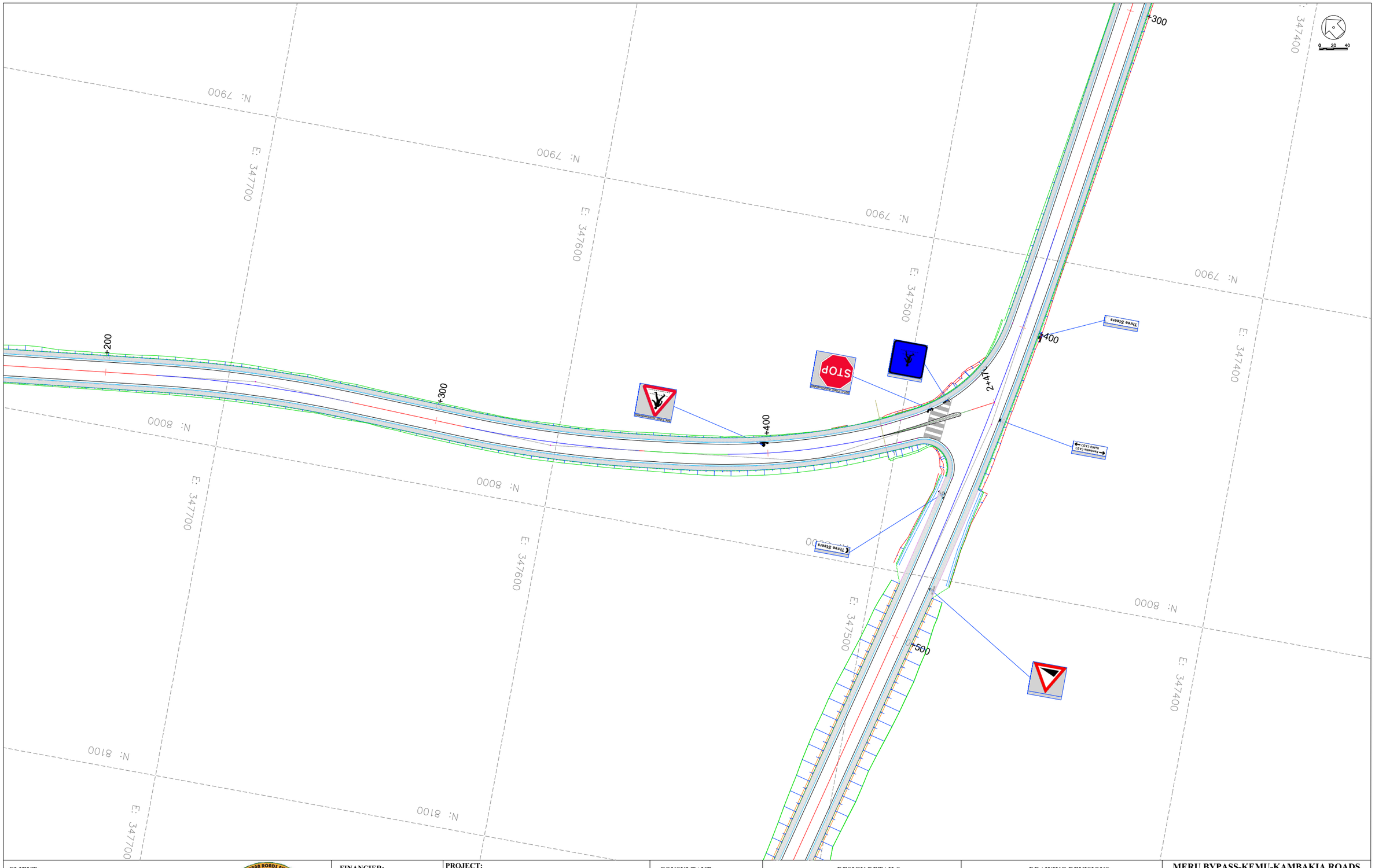

CLIENT:

KENYA NATIONAL HIGHWAY AUTHORITY
Barabara Plaza,
Off Airport South Road,
P. O. Box, 49712 - 00100,
NAIROBI.

KENYA URBAN ROADS AUTHORITY
Barabara Plaza,
Off Airport South Road,
P. O. Box, 49712 - 00100,
NAIROBI.

FINANCIER:

THE WORLD BANK

PROJECT:

HORN OF AFRICA GATEWAY DEVELOPMENT PROJECT (HOAGDP): -

Consultancy Services for the Design and Works Supervision for the Proposed Extension of Meru Bypass.

CONTRACT NO:

KeNHA/RD/CS/D/4205/2024

CONSULTANT:

One Padmore Place 6th Floor,
George Padmore Road,
P. O. Box, 76672 - 00508,
NAIROBI.

DESIGN DETAILS

Action	Name	Date
Designed By:	S.A	AUG 2025
Drawn By:	J.M	AUG 2025
Checked By:	L.R	AUG 2025
Approved By:	S.O	AUG 2025

DRAWING REVISIONS

No.	Revision Details	Reviewed	Initials	Date	Approved
		By			
		Checked			
		By			
		Checked			
		By			
		Checked			
		By			
		Checked			
		By			
		Checked			

MERU BYPASS-KEMU-KAMBAKIA ROADS

ROAD SIGNS LAYOUT

ROAD: 3-STEERS - KAMBAKIA

CH 2+300 - CH 2+474

DRAWING SCALE:

H: 1:500
V: 1:50

DRAWING NO:

R S L - 3S/KAM - 0 0 9
Doc. Type | Nature of Work | Number

1.2 KAMBAKIA-KAGOTONE KEMU C91 ROAD

ROAD SIGNS LAYOUT

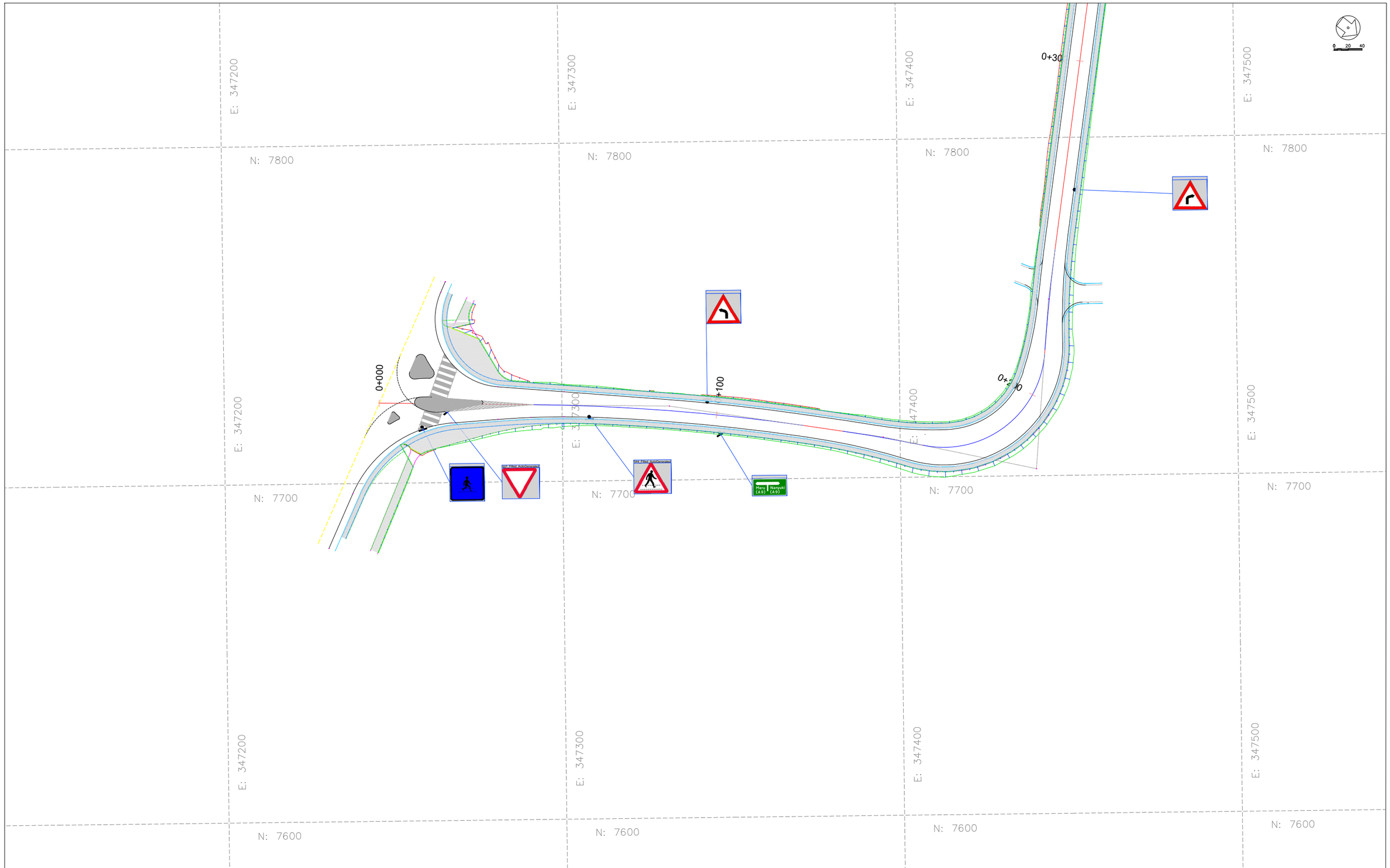

CLIENT:

KENYA NATIONAL HIGHWAY AUTHORITY
Barabara Plaza,
Off Airport South Road,
P. O. Box, 49712 - 00100,
NAIROBI.

KENYA URBAN ROADS AUTHORITY
Barabara Plaza,
Off Airport South Road,
P. O. Box, 49712 - 00100,
NAIROBI.

FINANCIER:

THE WORLD BANK

PROJECT:

HORN OF AFRICA GATEWAY DEVELOPMENT PROJECT (HOAGDP): -

Consultancy Services for the Design and Works Supervision for the Proposed Extension of Meru Bypass.

CONTRACT NO:

KeNHA/RD/CS/D/4205/2024

CONSULTANT:

egis

One Padmore Place 6th Floor,
George Padmore Road,
P. O. Box, 76672 - 00508,
NAIROBI.

DESIGN DETAILS		
Action	Name	Date
Designed By:	S.A	AUG 2025
Drawn By:	J.M	AUG 2025
Checked By:	L.R	AUG 2025
Approved By:	S.O	AUG 2025

DRAWING REVISIONS					
No.	Revision Details	Reviewed	Initials	Date	Approved
		By			
		Checked			
		By			
		Checked			
		By			
		Checked			
		By			
		Checked			
		By			
		Checked			

MERU BYPASS-KEMU-KAMBAKIA ROADS

ROAD SIGNS LAYOUT

ROAD: KAMBAKIA - KAGOTONE-KEMU C91

CH 0+000 - CH 0+200

DRAWING SCALE:

H: 1:500
V: 1:50

DRAWING NO:

RSL - KAM/KAG - 001
Doc. Type | Nature of Work | Number

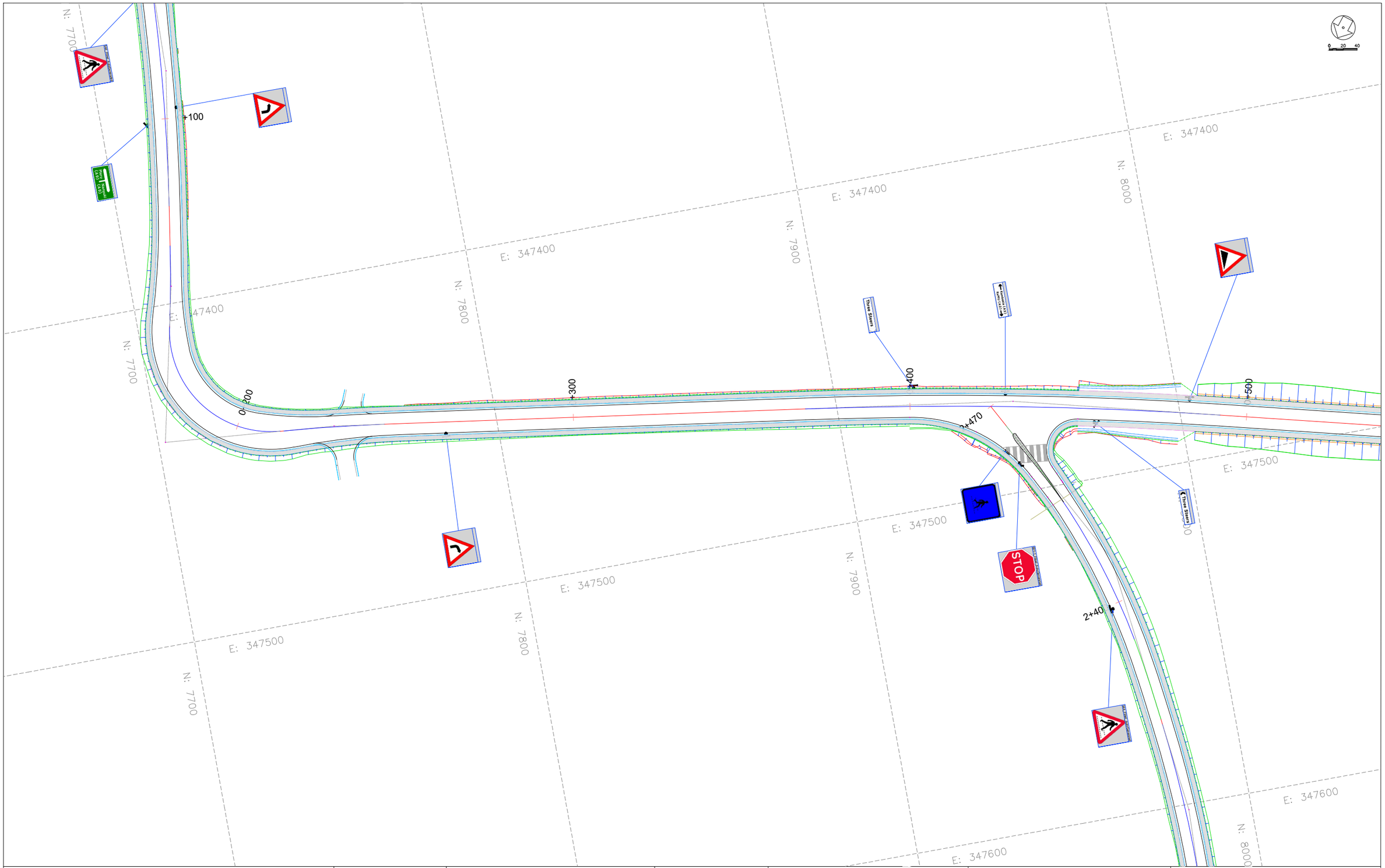

CLIENT:

KENYA NATIONAL HIGHWAY AUTHORITY
Barabara Plaza,
Off Airport South Road,
P. O. Box, 49712 - 00100,
NAIROBI.

KENYA URBAN ROADS AUTHORITY
Barabara Plaza,
Off Airport South Road,
P. O. Box, 49712 - 00100,
NAIROBI.

FINANCIER:

THE WORLD BANK

PROJECT:

HORN OF AFRICA GATEWAY DEVELOPMENT PROJECT (HOAGDP): -

Consultancy Services for the Design and Works Supervision for the Proposed Extension of Meru Bypass.

CONTRACT NO:

KeNHA/RD/CS/D/4205/2024

CONSULTANT:

One Padmore Place 6th Floor,
George Padmore Road,
P. O. Box, 76672 - 00508,
NAIROBI.

DESIGN DETAILS

Action	Name	Date
Designed By:	S.A	AUG 2025
Drawn By:	J.M	AUG 2025
Checked By:	L.R	AUG 2025
Approved By:	S.O	AUG 2025

DRAWING REVISIONS

No.	Revision Details	Reviewed	Initials	Date	Approved
		By			
		Checked			
		By			
		Checked			
		By			
		Checked			
		By			
		Checked			
		By			
		Checked			

MERU BYPASS-KEMU-KAMBAKIA ROADS

ROAD SIGNS LAYOUT

ROAD: KAMBAKIA - KAGOTONE-KEMU C91

CH 0+200 - CH 0+500

DRAWING SCALE:

H: 1:500
V: 1:50

DRAWING NO:

R S L - KAM/KAG - 0 0 2
Doc. Type | Nature of Work | Number

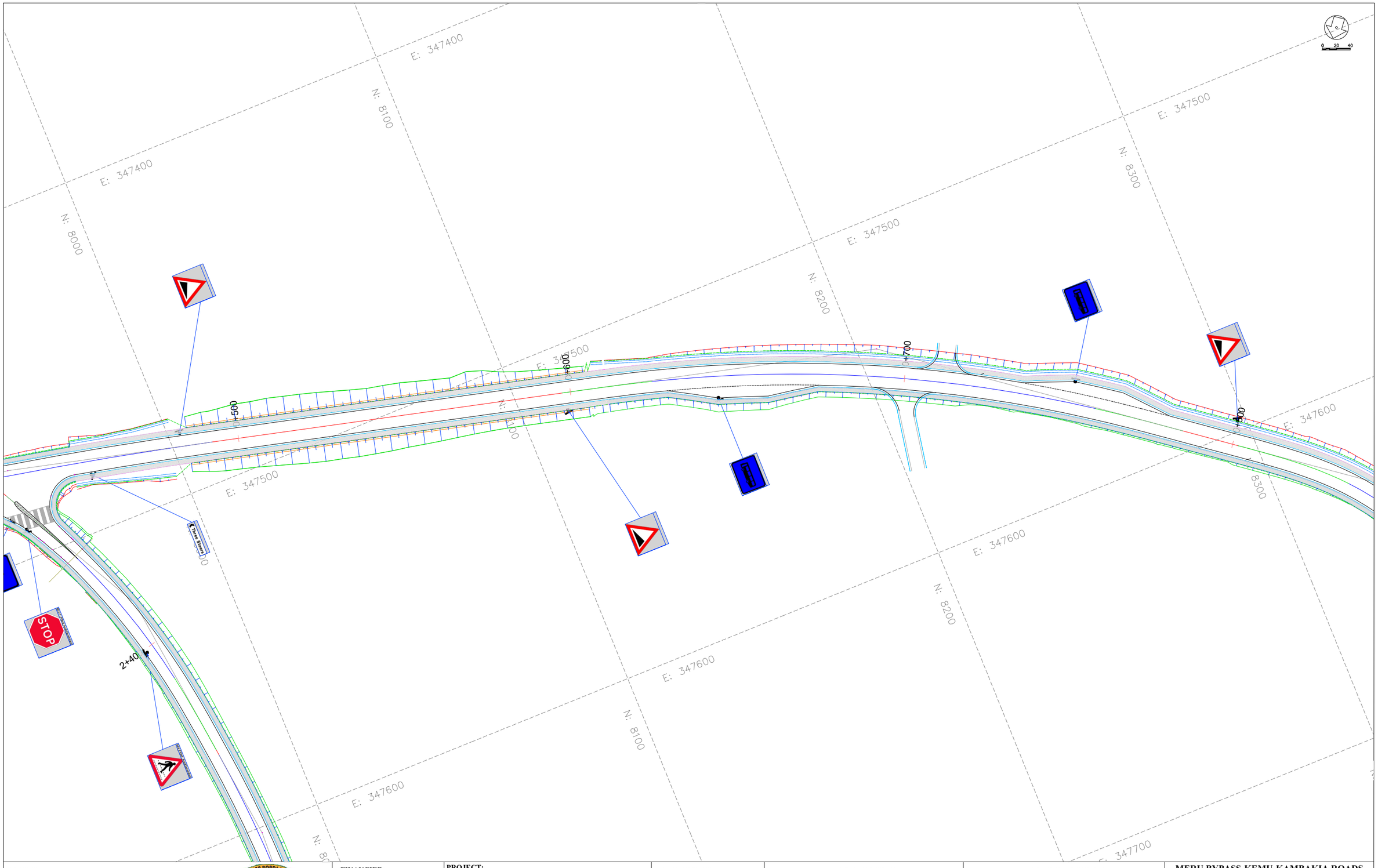

CLIENT:

KENYA NATIONAL HIGHWAY AUTHORITY
Barabara Plaza,
Off Airport South Road,
P. O. Box, 49712 - 00100,
NAIROBI.

KENYA URBAN ROADS AUTHORITY
Barabara Plaza,
Off Airport South Road,
P. O. Box, 49712 - 00100,
NAIROBI.

FINANCIER:

THE WORLD BANK

PROJECT:

HORN OF AFRICA GATEWAY DEVELOPMENT PROJECT (HOAGDP): -

Consultancy Services for the Design and Works Supervision for the Proposed Extension of Meru Bypass.

CONTRACT NO:

KeNHA/RD/CS/D/4205/2024

CONSULTANT:

One Padmore Place 6th Floor,
George Padmore Road,
P. O. Box, 76672 - 00508,
NAIROBI.

DESIGN DETAILS

Action	Name	Date
Designed By:	S.A	AUG 2025
Drawn By:	J.M	AUG 2025
Checked By:	L.R	AUG 2025
Approved By:	S.O	AUG 2025

DRAWING REVISIONS

No.	Revision Details	Reviewed	Initials	Date	Approved
		By			
		Checked			
		By			
		Checked			
		By			
		Checked			
		By			
		Checked			
		By			
		Checked			

MERU BYPASS-KEMU-KAMBAKIA ROADS

ROAD SIGNS LAYOUT

ROAD: KAMBAKIA - KAGOTONE-KEMU C91

CH 0+500 - CH 0+800

DRAWING SCALE:

H: 1:500
V: 1:50

DRAWING NO:

R S L - KAM/KAG - 0 0 3
Doc. Type | Nature of Work | Number

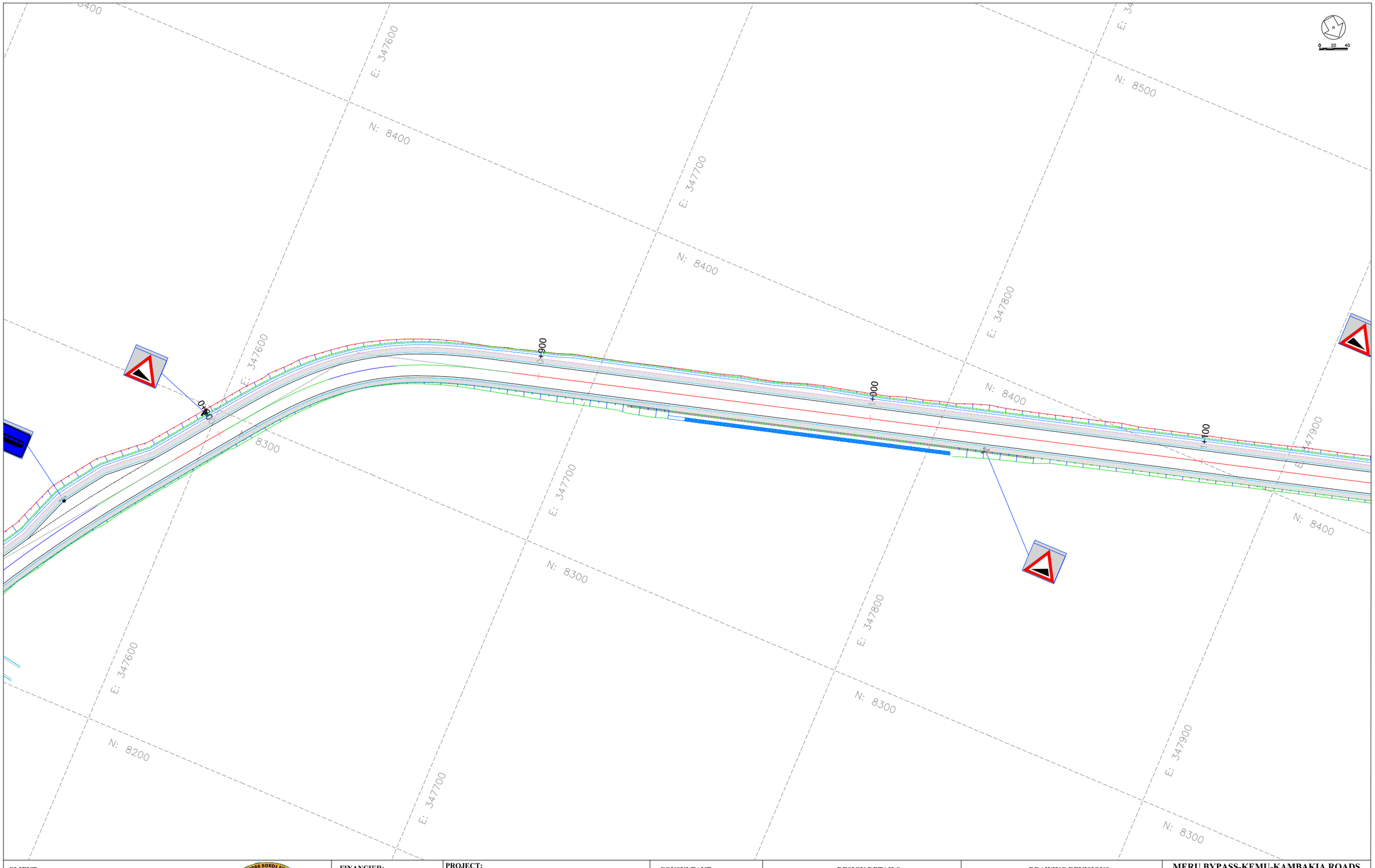

CLIENT:

KENYA NATIONAL HIGHWAY AUTHORITY
Barabara Plaza,
Off Airport South Road,
P. O. Box, 49712 - 00100,
NAIROBI.

KENYA URBAN ROADS AUTHORITY
Barabara Plaza,
Off Airport South Road,
P. O. Box, 49712 - 00100,
NAIROBI.

FINANCIER:

THE WORLD BANK

PROJECT:

HORN OF AFRICA GATEWAY DEVELOPMENT PROJECT (HOAGDP): -

Consultancy Services for the Design and Works Supervision for the Proposed Extension of Meru Bypass.

CONTRACT NO:

KeNHA/RD/CS/D/4205/2024

CONSULTANT:

egis

One Padmore Place 6th Floor,
George Padmore Road,
P. O. Box, 76672 - 00508,
NAIROBI.

DESIGN DETAILS

Action	Name	Date
Designed By:	S.A	AUG 2025
Drawn By:	J.M	AUG 2025
Checked By:	L.R	AUG 2025
Approved By:	S.O	AUG 2025

DRAWING REVISIONS

No.	Revision Details	Reviewed	Initials	Date	Approved
		By			
		Checked			
		By			
		Checked			
		By			
		Checked			
		By			
		Checked			
		By			
		Checked			

MERU BYPASS-KEMU-KAMBAKIA ROADS

ROAD SIGNS LAYOUT

ROAD: KAMBAKIA - KAGOTONE-KEMU C91

CH 0+800 - CH 1+100

DRAWING SCALE:

H: 1:500
V: 1:50

DRAWING NO:

R S L - KAM/KAG - 0 0 4
Doc. Type | Nature of Work | Number

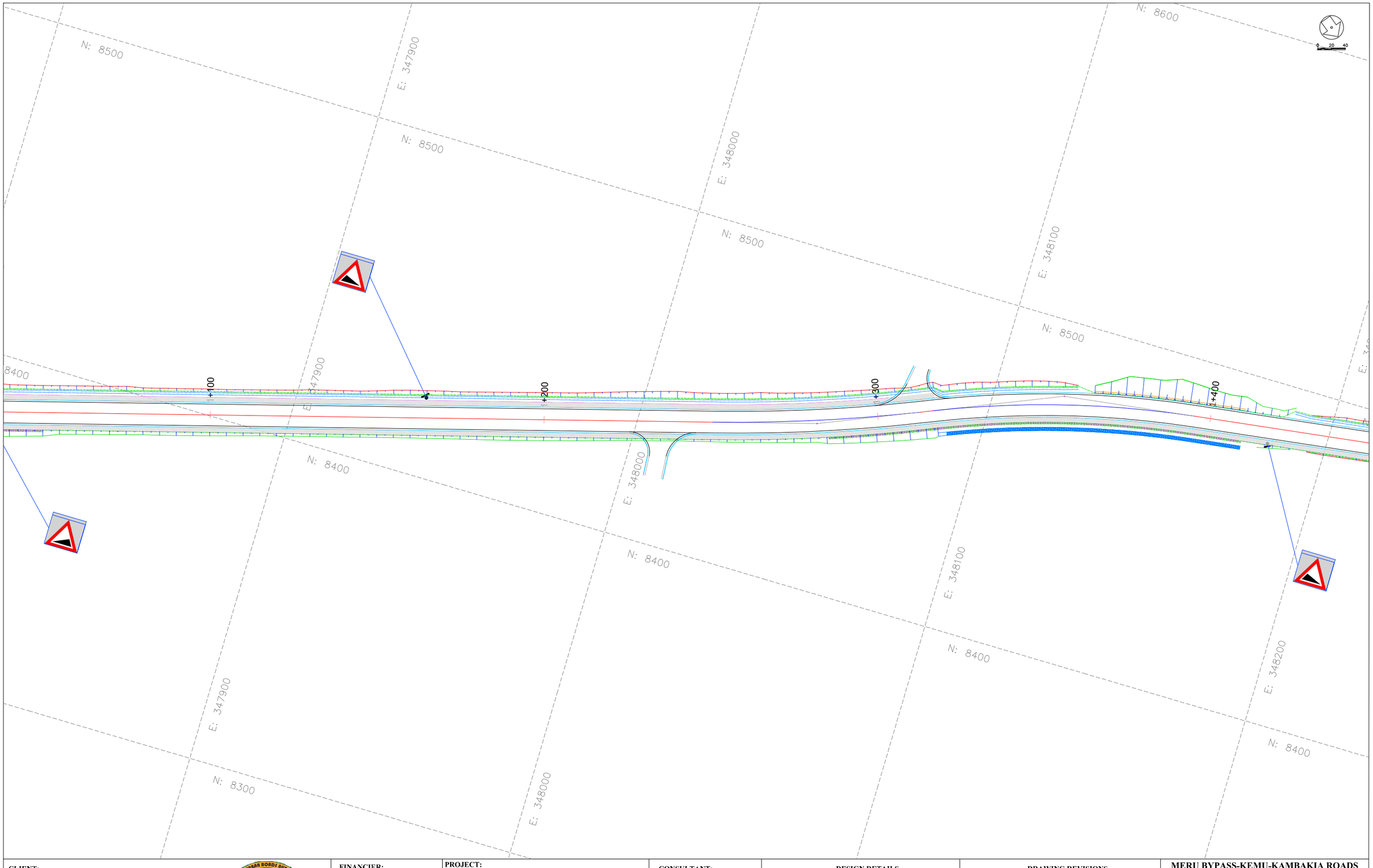

CLIENT:

KENYA NATIONAL HIGHWAY AUTHORITY
Barabara Plaza,
Off Airport South Road,
P. O. Box, 49712 - 00100,
NAIROBI.

KENYA URBAN ROADS AUTHORITY
Barabara Plaza,
Off Airport South Road,
P. O. Box, 49712 - 00100,
NAIROBI.

FINANCIER:

THE WORLD BANK

PROJECT:

HORN OF AFRICA GATEWAY DEVELOPMENT PROJECT (HOAGDP): -

Consultancy Services for the Design and Works Supervision for the Proposed Extension of Meru Bypass.

CONTRACT NO:

KeNHA/RD/CS/D/4205/2024

CONSULTANT:

egis

One Padmore Place 6th Floor,
George Padmore Road,
P. O. Box, 76672 - 00508,
NAIROBI.

DESIGN DETAILS

Action	Name	Date
Designed By:	S.A	AUG 2025
Drawn By:	J.M	AUG 2025
Checked By:	L.R	AUG 2025
Approved By:	S.O	AUG 2025

DRAWING REVISIONS

No.	Revision Details	Reviewed	Initials	Date	Approved
		By			
		Checked			
		By			
		Checked			
		By			
		Checked			
		By			
		Checked			
		By			
		Checked			

MERU BYPASS-KEMU-KAMBAKIA ROADS

ROAD SIGNS LAYOUT

ROAD: KAMBAKIA - KAGOTONE-KEMU C91

CH 1+100 - CH 1+400

DRAWING SCALE:

H: 1:500
V: 1:50

DRAWING NO:

RSL - KAM/KAG - 005
Doc. Type | Nature of Work | Number

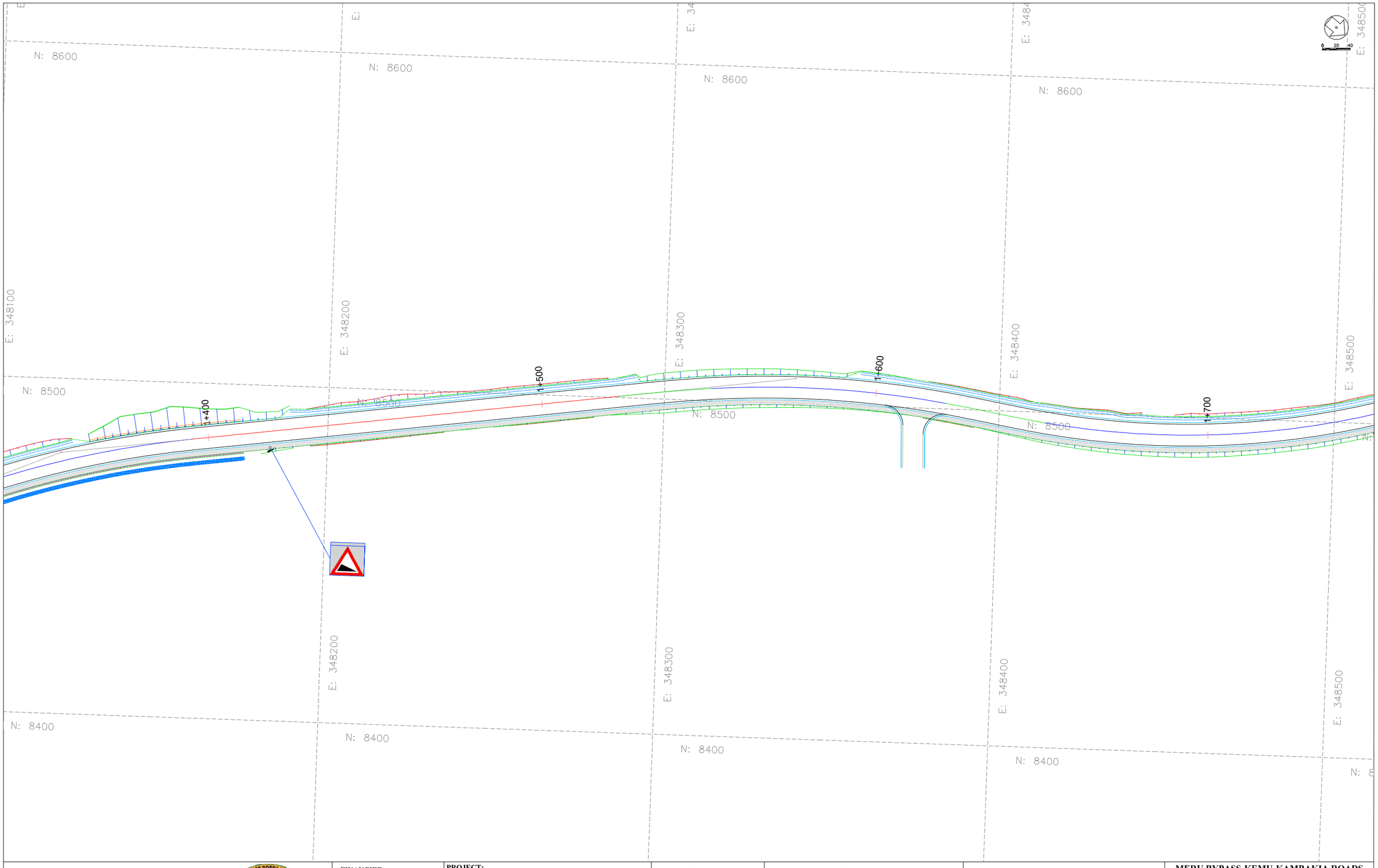

CLIENT:

KENYA NATIONAL HIGHWAY AUTHORITY
Barabara Plaza,
Off Airport South Road,
P. O. Box, 49712 - 00100,
NAIROBI.

KENYA URBAN ROADS AUTHORITY
Barabara Plaza,
Off Airport South Road,
P. O. Box, 49712 - 00100,
NAIROBI.

FINANCIER:

THE WORLD BANK

PROJECT:

HORN OF AFRICA GATEWAY DEVELOPMENT PROJECT (HOAGDP): -

Consultancy Services for the Design and Works Supervision for the Proposed Extension of Meru Bypass.

CONTRACT NO:

KeNHA/RD/CS/D/4205/2024

CONSULTANT:

egis

One Padmore Place 6th Floor,
George Padmore Road,
P. O. Box, 76672 - 00508,
NAIROBI.

DESIGN DETAILS

Action	Name	Date
Designed By:	S.A	AUG 2025
Drawn By:	J.M	AUG 2025
Checked By:	L.R	AUG 2025
Approved By:	S.O	AUG 2025

DRAWING REVISIONS

No.	Revision Details	Reviewed	Initials	Date	Approved
		By			
		Checked			
		By			
		Checked			
		By			
		Checked			
		By			
		Checked			
		By			
		Checked			

MERU BYPASS-KEMU-KAMBAKIA ROADS

ROAD SIGNS LAYOUT

ROAD: KAMBAKIA - KAGOTONE-KEMU C91

CH 1+400 - CH 1+700

DRAWING SCALE:

H: 1:500
V: 1:50

DRAWING NO:

R S L - KAM/KAG - 0 0 6
Doc. Type | Nature of Work | Number

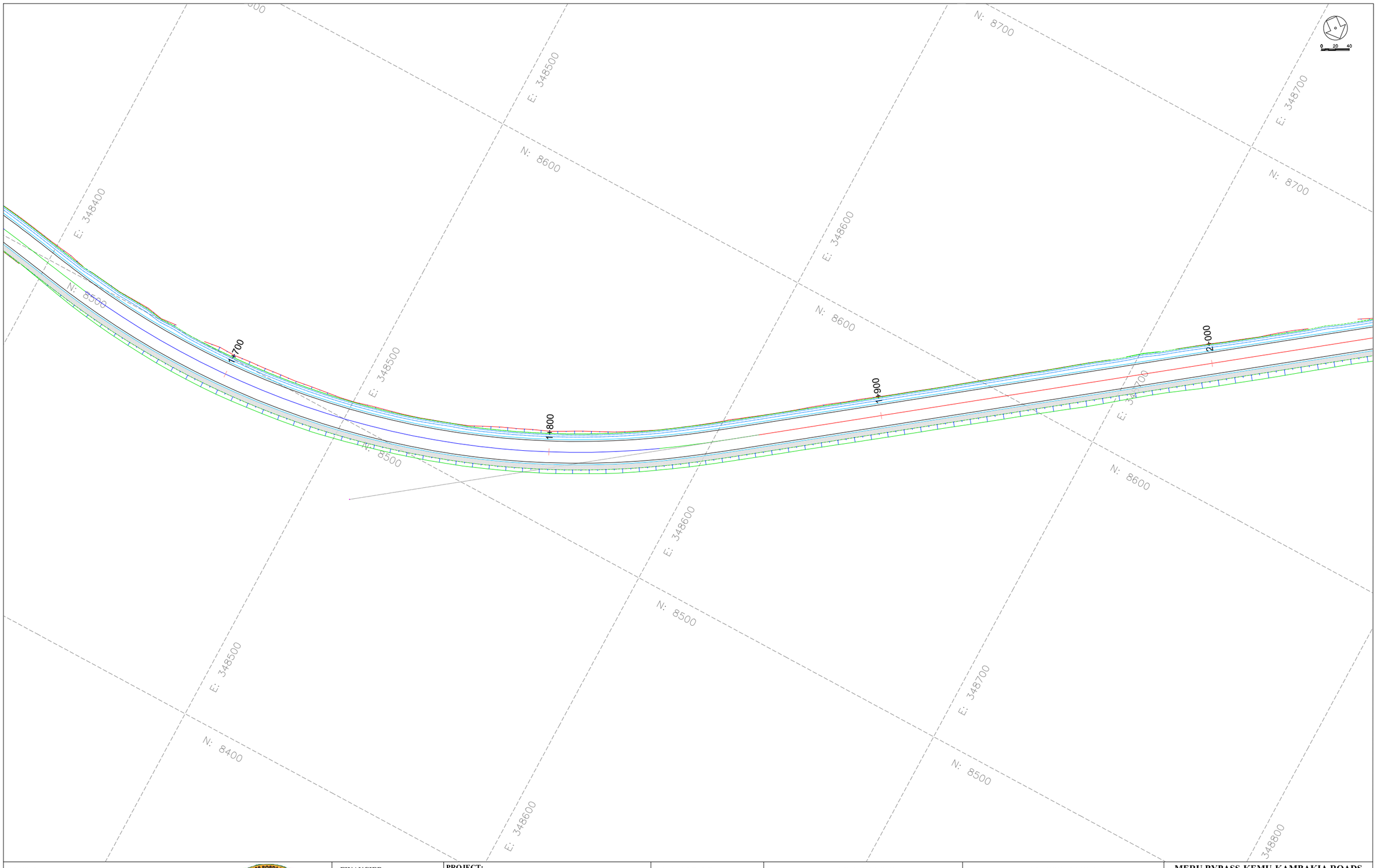

CLIENT:

KENYA NATIONAL HIGHWAY AUTHORITY
Barabara Plaza,
Off Airport South Road,
P. O. Box, 49712 - 00100,
NAIROBI.

KENYA URBAN ROADS AUTHORITY
Barabara Plaza,
Off Airport South Road,
P. O. Box, 49712 - 00100,
NAIROBI.

FINANCIER:

THE WORLD BANK

PROJECT:

HORN OF AFRICA GATEWAY DEVELOPMENT PROJECT (HOAGDP): -

Consultancy Services for the Design and Works Supervision for the Proposed Extension of Meru Bypass.

CONTRACT NO:

KeNHA/RD/CS/D/4205/2024

CONSULTANT:

egis

One Padmore Place 6th Floor,
George Padmore Road,
P. O. Box, 76672 - 00508,
NAIROBI.

DESIGN DETAILS

Action	Name	Date
Designed By:	S.A	AUG 2025
Drawn By:	J.M	AUG 2025
Checked By:	L.R	AUG 2025
Approved By:	S.O	AUG 2025

DRAWING REVISIONS

No.	Revision Details	Reviewed	Initials	Date	Approved
		By			
		Checked			
		By			
		Checked			
		By			
		Checked			
		By			
		Checked			
		By			
		Checked			

MERU BYPASS-KEMU-KAMBAKIA ROADS

ROAD SIGNS LAYOUT

ROAD: KAMBAKIA - KAGOTONE-KEMU C91

CH 1+700 - CH 2+000

DRAWING SCALE:

H: 1:500
V: 1:50

DRAWING NO:

R S L - KAM/KAG - 0 0 7
Doc. Type | Nature of Work | Number

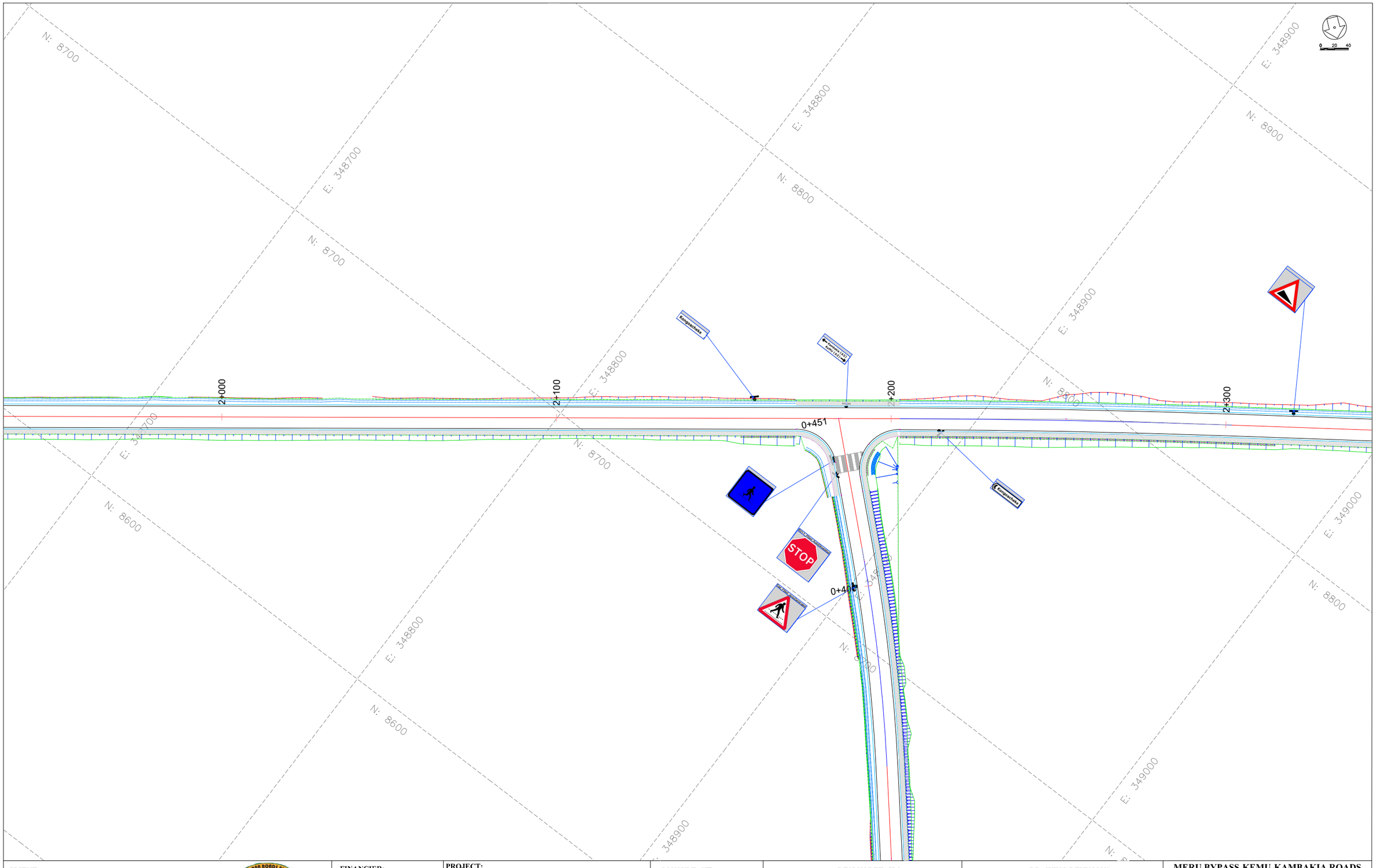

CLIENT:

KENYA NATIONAL HIGHWAY AUTHORITY
Barabara Plaza,
Off Airport South Road,
P. O. Box, 49712 - 00100,
NAIROBI.

KENYA URBAN ROADS AUTHORITY
Barabara Plaza,
Off Airport South Road,
P. O. Box, 49712 - 00100,
NAIROBI.

FINANCIER:

THE WORLD BANK

PROJECT:

HORN OF AFRICA GATEWAY DEVELOPMENT PROJECT (HOAGDP): -

Consultancy Services for the Design and Works Supervision for the Proposed Extension of Meru Bypass.

CONTRACT NO:

KeNHA/RD/CS/D/4205/2024

CONSULTANT:

egis

One Padmore Place 6th Floor,
George Padmore Road,
P. O. Box, 76672 - 00508,
NAIROBI.

DESIGN DETAILS

Action	Name	Date
Designed By:	S.A	AUG 2025
Drawn By:	J.M	AUG 2025
Checked By:	L.R	AUG 2025
Approved By:	S.O	AUG 2025

DRAWING REVISIONS

No.	Revision Details	Reviewed	Initials	Date	Approved
		By			
		Checked			
		By			
		Checked			
		By			
		Checked			
		By			
		Checked			
		By			
		Checked			

MERU BYPASS-KEMU-KAMBAKIA ROADS

ROAD SIGNS LAYOUT

ROAD: KAMBAKIA - KAGOTONE-KEMU C91

CH 2+000 - CH 2+300

DRAWING SCALE:

H: 1:500
V: 1:50

DRAWING NO:

RSL-KAM/KAG-008
Doc. Type | Nature of Work | Number

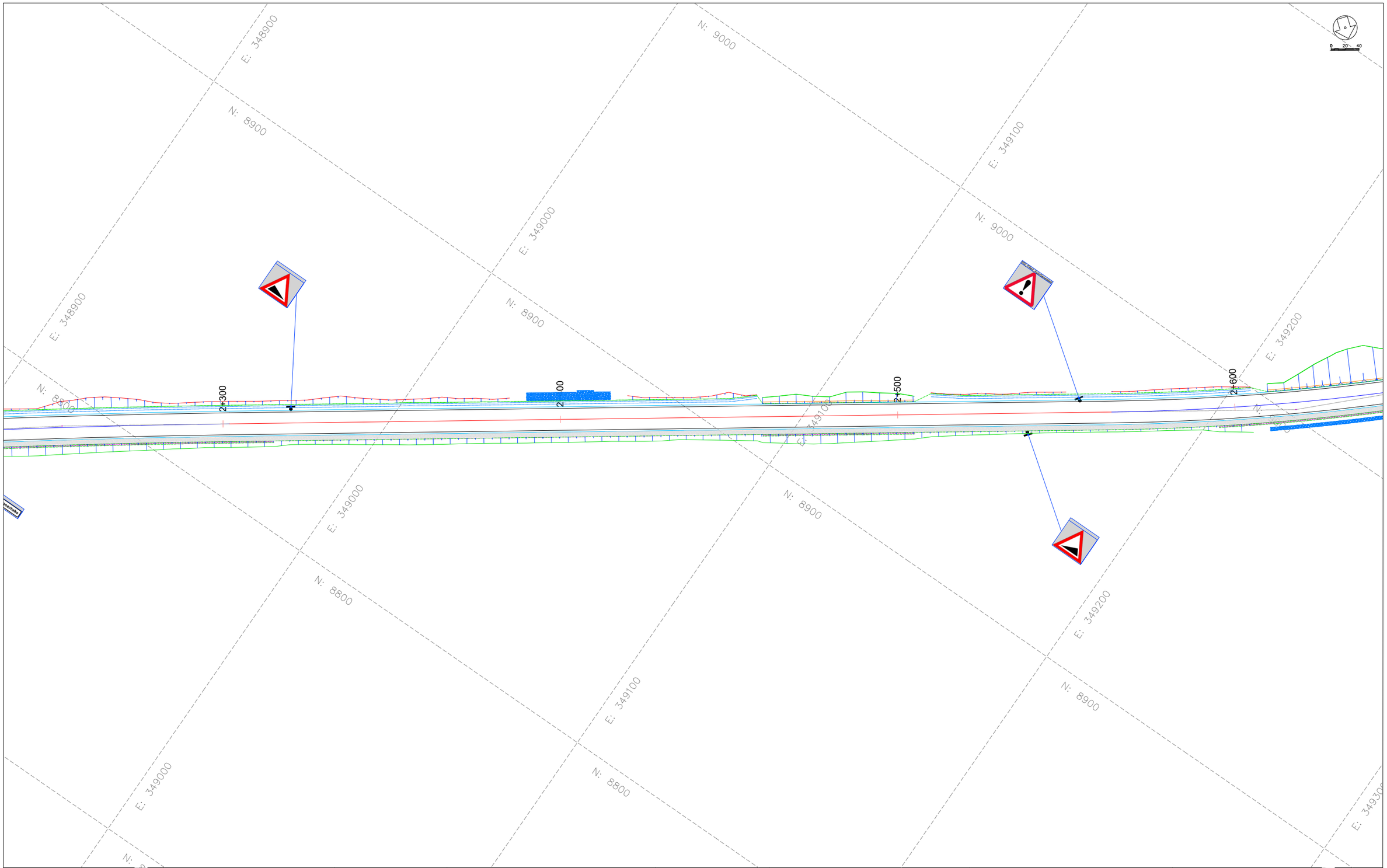

CLIENT:

KENYA NATIONAL HIGHWAY AUTHORITY
Barabara Plaza,
Off Airport South Road,
P. O. Box, 49712 - 00100,
NAIROBI.

KENYA URBAN ROADS AUTHORITY
Barabara Plaza,
Off Airport South Road,
P. O. Box, 49712 - 00100,
NAIROBI.

FINANCIER:

THE WORLD BANK

PROJECT:

HORN OF AFRICA GATEWAY DEVELOPMENT PROJECT (HOAGDP): -

Consultancy Services for the Design and Works Supervision for the Proposed Extension of Meru Bypass.

CONTRACT NO:

KeNHA/RD/CS/D/4205/2024

CONSULTANT:

egis

One Padmore Place 6th Floor,
George Padmore Road,
P. O. Box, 76672 - 00508,
NAIROBI.

DESIGN DETAILS

Action	Name	Date
Designed By:	S.A	AUG 2025
Drawn By:	J.M	AUG 2025
Checked By:	L.R	AUG 2025
Approved By:	S.O	AUG 2025

DRAWING REVISIONS

No.	Revision Details	Reviewed	Initials	Date	Approved
		By			
		Checked			
		By			
		Checked			
		By			
		Checked			
		By			
		Checked			
		By			
		Checked			

MERU BYPASS-KEMU-KAMBAKIA ROADS

ROAD SIGNS LAYOUT

ROAD: KAMBAKIA - KAGOTONE-KEMU C91

CH 2+300 - CH 2+600

DRAWING SCALE:

H: 1:500
V: 1:50

DRAWING NO:

RSL-KAM/KAG-009
Doc. Type | Nature of Work | Number

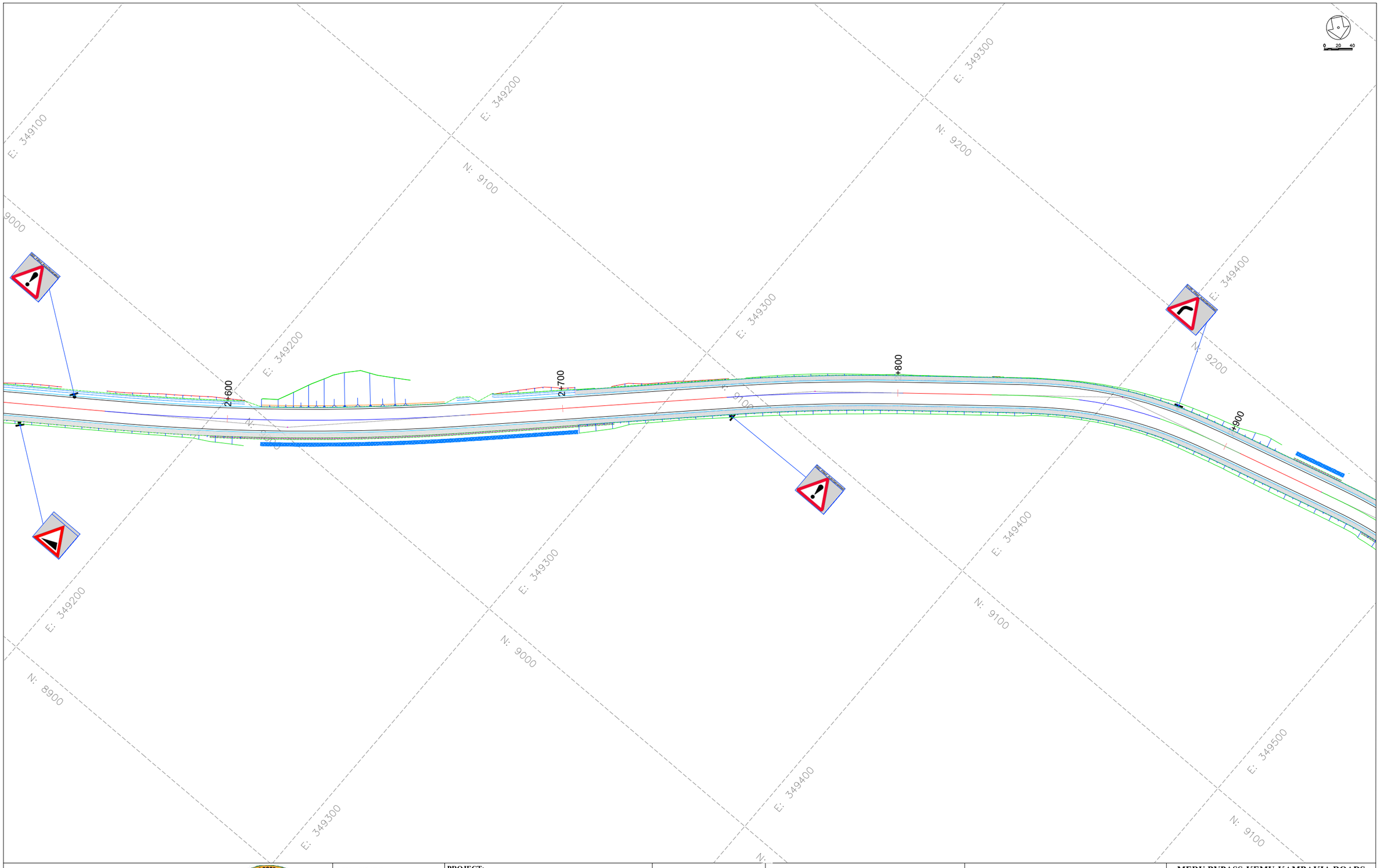

CLIENT:

KENYA NATIONAL HIGHWAY AUTHORITY
Barabara Plaza,
Off Airport South Road,
P. O. Box, 49712 - 00100,
NAIROBI.

KENYA URBAN ROADS AUTHORITY
Barabara Plaza,
Off Airport South Road,
P. O. Box, 49712 - 00100,
NAIROBI.

FINANCIER:

THE WORLD BANK

PROJECT:

HORN OF AFRICA GATEWAY DEVELOPMENT PROJECT (HOAGDP): -

Consultancy Services for the Design and Works Supervision for the Proposed Extension of Meru Bypass.

CONTRACT NO:

KeNHA/RD/CS/D/4205/2024

CONSULTANT:

egis

One Padmore Place 6th Floor,
George Padmore Road,
P. O. Box, 76672 - 00508,
NAIROBI.

DESIGN DETAILS

Action	Name	Date
Designed By:	S.A	AUG 2025
Drawn By:	J.M	AUG 2025
Checked By:	L.R	AUG 2025
Approved By:	S.O	AUG 2025

DRAWING REVISIONS

No.	Revision Details	Reviewed	Initials	Date	Approved
		By			
		Checked			
		By			
		Checked			
		By			
		Checked			
		By			
		Checked			
		By			
		Checked			

MERU BYPASS-KEMU-KAMBAKIA ROADS

ROAD SIGNS LAYOUT

ROAD: KAMBAKIA - KAGOTONE-KEMU C91

CH 2+600 - CH 2+900

DRAWING SCALE:

H: 1:500
V: 1:50

DRAWING NO:

RSL-KAM/KAG-010
Doc. Type | Nature of Work | Number

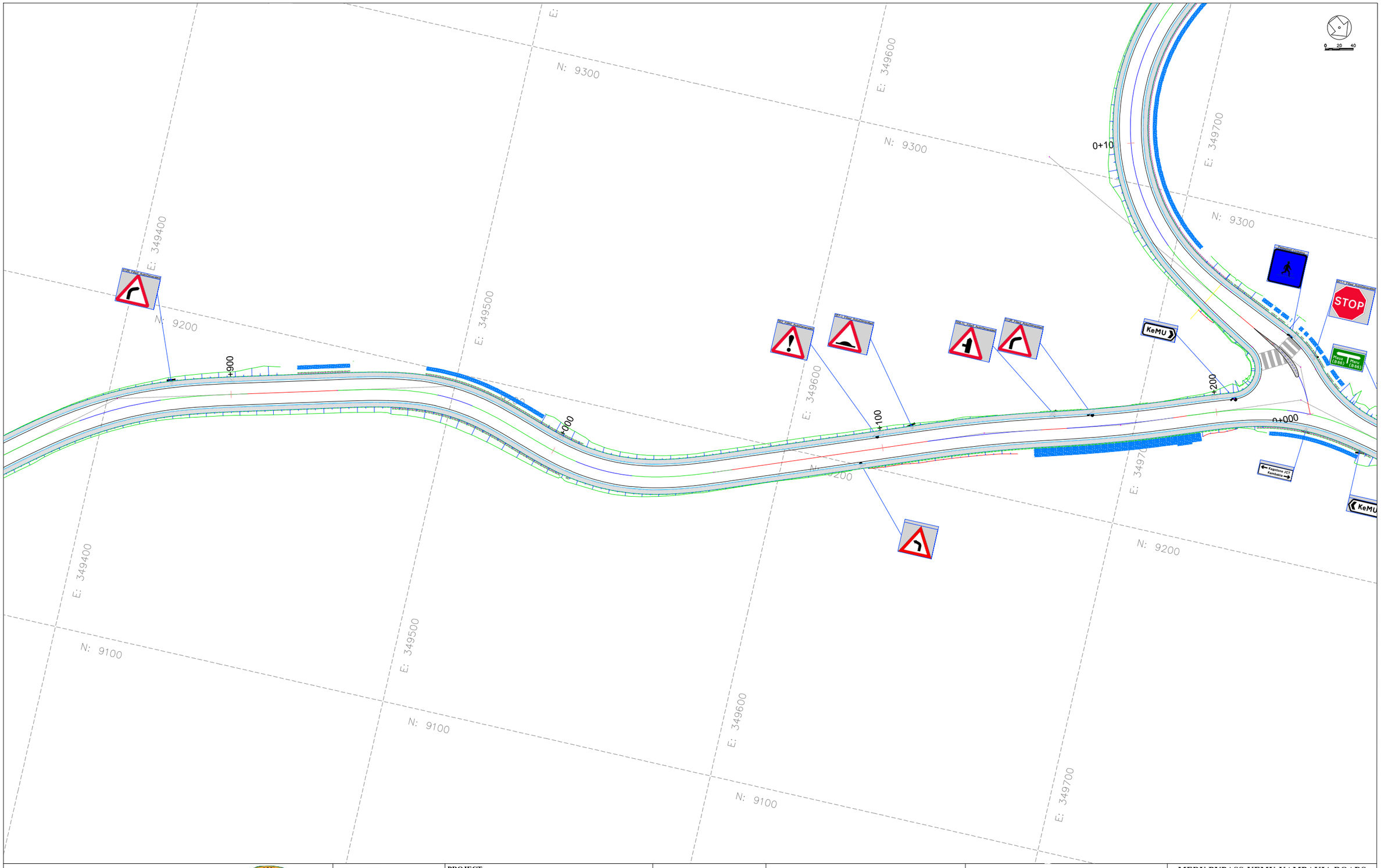

CLIENT:

KENYA NATIONAL HIGHWAY AUTHORITY
Barabara Plaza,
Off Airport South Road,
P. O. Box, 49712 - 00100,
NAIROBI.

KENYA URBAN ROADS AUTHORITY
Barabara Plaza,
Off Airport South Road,
P. O. Box, 49712 - 00100,
NAIROBI.

FINANCIER:

THE WORLD BANK

PROJECT:

HORN OF AFRICA GATEWAY DEVELOPMENT PROJECT (HOAGDP): -

Consultancy Services for the Design and Works Supervision for the Proposed Extension of Meru Bypass.

CONTRACT NO:

KeNHA/RD/CS/D/4205/2024

CONSULTANT:

egis

One Padmore Place 6th Floor,
George Padmore Road,
P. O. Box, 76672 - 00508,
NAIROBI.

DESIGN DETAILS

Action	Name	Date
Designed By:	S.A	AUG 2025
Drawn By:	J.M	AUG 2025
Checked By:	L.R	AUG 2025
Approved By:	S.O	AUG 2025

DRAWING REVISIONS

No.	Revision Details	Reviewed	Initials	Date	Approved
		By			
		Checked			
		By			
		Checked			
		By			
		Checked			
		By			
		Checked			
		By			
		Checked			

MERU BYPASS-KEMU-KAMBAKIA ROADS

ROAD SIGNS LAYOUT

ROAD: KAMBAKIA - KAGOTONE-KEMU C91

CH 2+900 - CH 3+200

DRAWING SCALE:

H: 1:500
V: 1:50

DRAWING NO:

RSL-KAM/KAG-011
Doc. Type | Nature of Work | Number

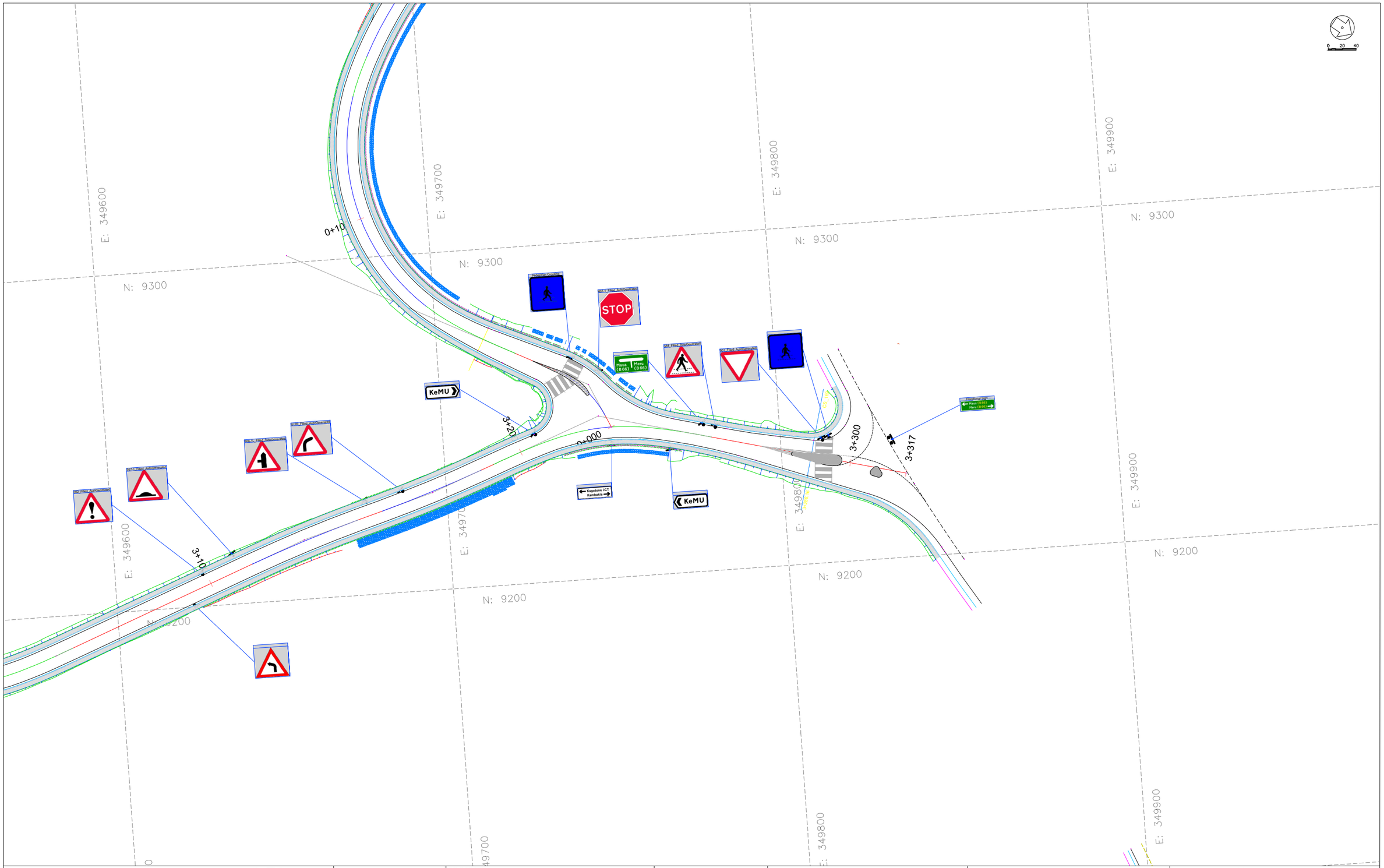

CLIENT:

KENYA NATIONAL HIGHWAY AUTHORITY
Barabara Plaza,
Off Airport South Road,
P. O. Box, 49712 - 00100,
NAIROBI.

KENYA URBAN ROADS AUTHORITY
Barabara Plaza,
Off Airport South Road,
P. O. Box, 49712 - 00100,
NAIROBI.

FINANCIER:

THE WORLD BANK

PROJECT:

HORN OF AFRICA GATEWAY DEVELOPMENT PROJECT (HOAGDP): -

Consultancy Services for the Design and Works Supervision for the Proposed Extension of Meru Bypass.

CONTRACT NO:

KeNHA/RD/CS/D/4205/2024

CONSULTANT:

egis

One Padmore Place 6th Floor,
George Padmore Road,
P. O. Box, 76672 - 00508,
NAIROBI.

DESIGN DETAILS

Action	Name	Date
Designed By:	S.A	AUG 2025
Drawn By:	J.M	AUG 2025
Checked By:	L.R	AUG 2025
Approved By:	S.O	AUG 2025

DRAWING REVISIONS

No.	Revision Details	Reviewed	Initials	Date	Approved
		By			
		Checked			
		By			
		Checked			
		By			
		Checked			
		By			
		Checked			
		By			
		Checked			

MERU BYPASS-KEMU-KAMBAKIA ROADS

ROAD SIGNS LAYOUT

ROAD: KAMBAKIA - KAGOTONE-KEMU C91

CH 3+200 - CH 3+327

DRAWING SCALE:

H: 1:500
V: 1:50

DRAWING NO:

RSL - KAM/KAG - 012
Doc. Type | Nature of Work | Number

1.3 KAGOTONE - KEMU LINK C91 ROAD

ROAD SIGNS LAYOUT

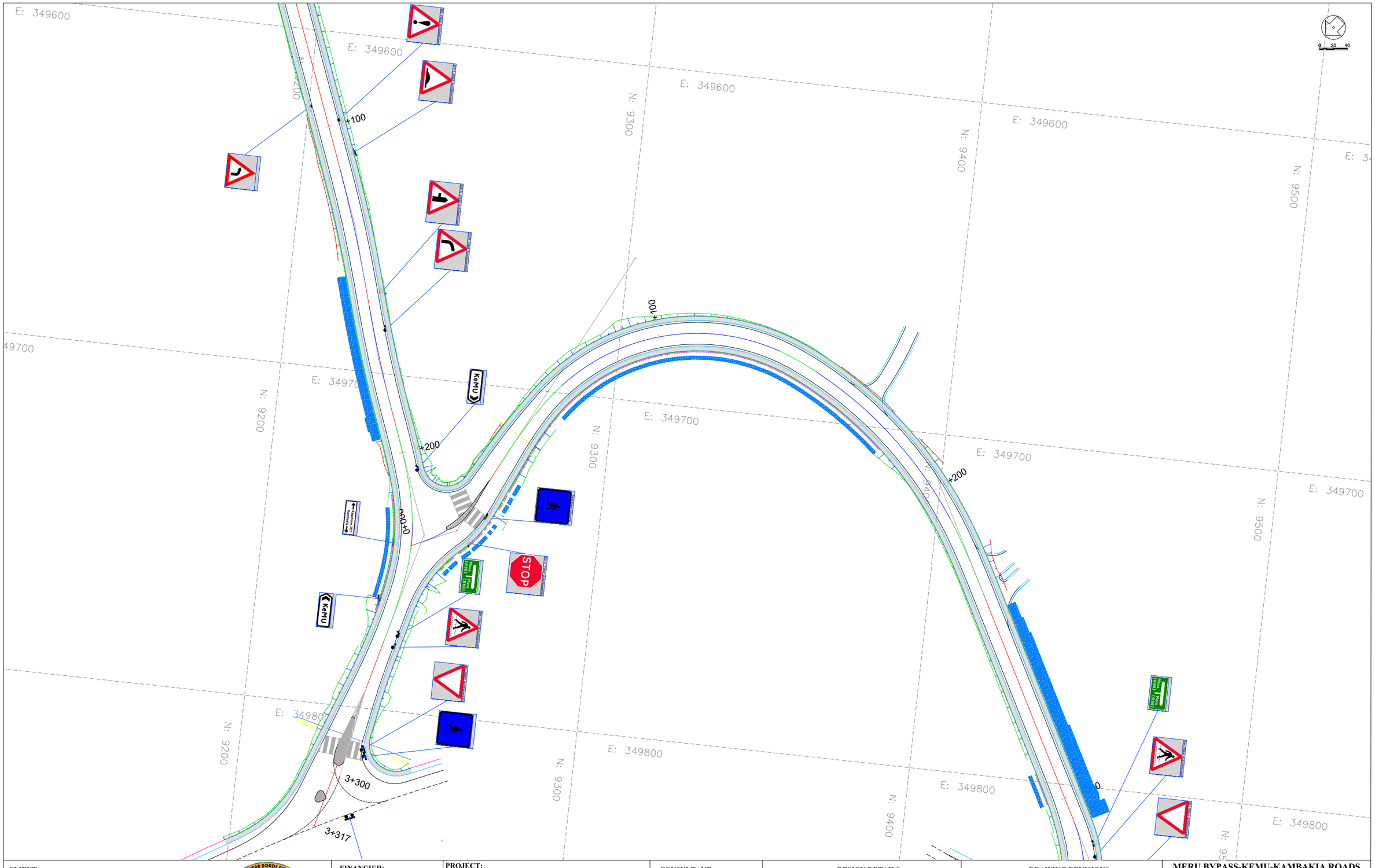

CLIENT:

KENYA NATIONAL HIGHWAY AUTHORITY
Barabara Plaza,
Off Airport South Road,
P. O. Box, 49712 - 00100,
NAIROBI.

KENYA URBAN ROADS AUTHORITY
Barabara Plaza,
Off Airport South Road,
P. O. Box, 49712 - 00100,
NAIROBI.

FINANCIER:

THE WORLD BANK

PROJECT:

HORN OF AFRICA GATEWAY DEVELOPMENT PROJECT (HOAGDP): -

Consultancy Services for the Design and Works Supervision for the Proposed Extension of Meru Bypass.

CONTRACT NO:

KeNHA/RD/CS/D/4205/2024

CONSULTANT:

egis

One Padmore Place 6th Floor,
George Padmore Road,
P. O. Box, 76672 - 00508,
NAIROBI.

DESIGN DETAILS

Action	Name	Date
Designed By:	S.A	AUG 2025
Drawn By:	J.M	AUG 2025
Checked By:	L.R	AUG 2025
Approved By:	S.O	AUG 2025

DRAWING REVISIONS

No.	Revision Details	Reviewed	Initials	Date	Approved
		By			
		Checked			
		By			
		Checked			
		By			
		Checked			
		By			
		Checked			
		By			
		Checked			

MERU BYPASS-KEMU-KAMBAKIA ROADS

ROAD SIGNS LAYOUT

ROAD: KAGOTONE-KEMU LINK C91

CH 0+000 - CH 0+200

DRAWING SCALE:

H: 1:500
V: 1:50

DRAWING NO:

RSL - KAG/KEM - 001
Doc. Type | Nature of Work | Number

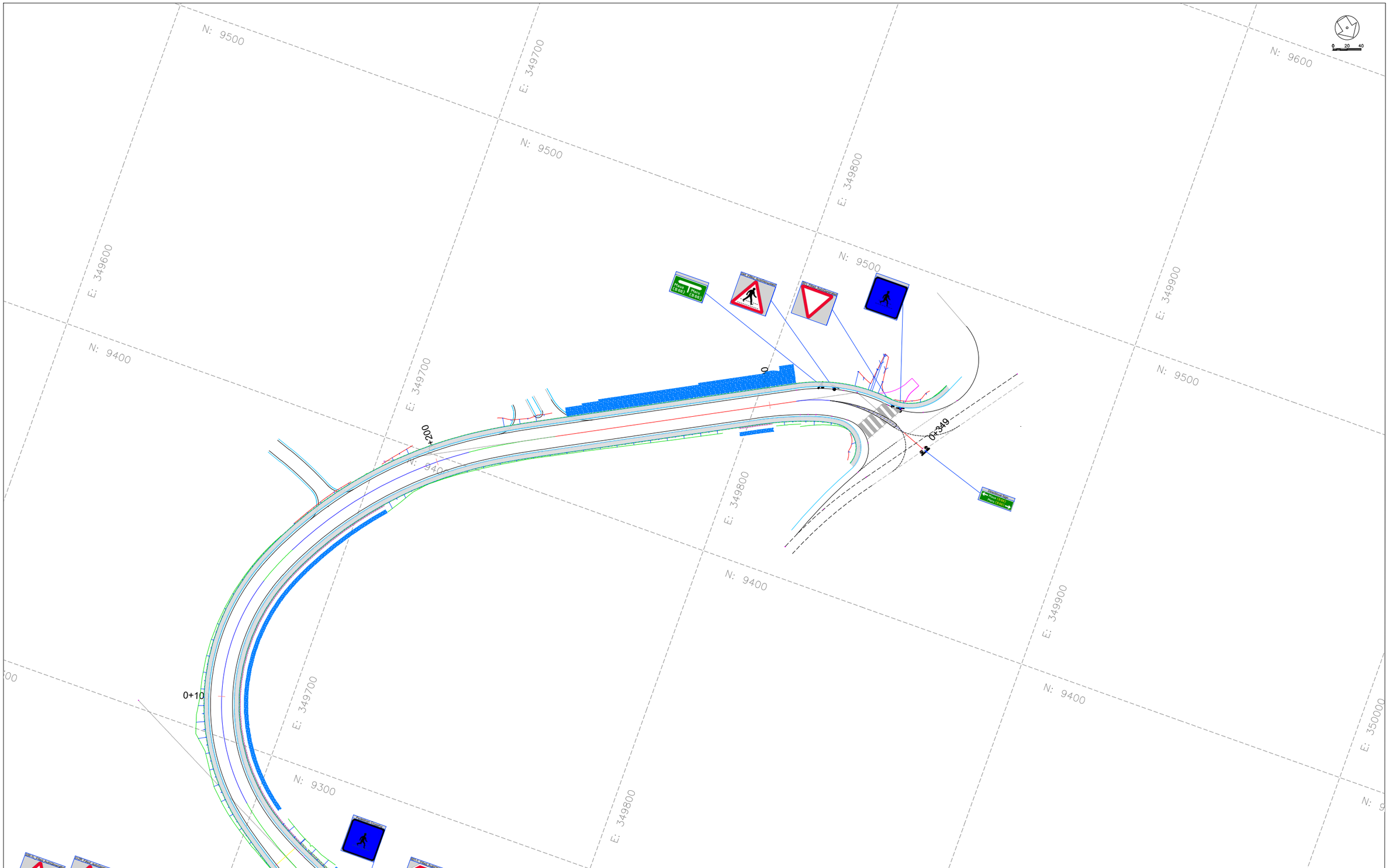

CLIENT:

KENYA NATIONAL HIGHWAY AUTHORITY
Barabara Plaza,
Off Airport South Road,
P. O. Box, 49712 - 00100,
NAIROBI.

KENYA URBAN ROADS AUTHORITY
Barabara Plaza,
Off Airport South Road,
P. O. Box, 49712 - 00100,
NAIROBI.

FINANCIER:

THE WORLD BANK

PROJECT:

HORN OF AFRICA GATEWAY DEVELOPMENT PROJECT (HOAGDP): -

Consultancy Services for the Design and Works Supervision for the Proposed Extension of Meru Bypass.

CONTRACT NO:

KeNHA/RD/CS/D/4205/2024

CONSULTANT:

egis

One Padmore Place 6th Floor,
George Padmore Road,
P. O. Box, 76672 - 00508,
NAIROBI.

DESIGN DETAILS

Action	Name	Date
Designed By:	S.A	AUG 2025
Drawn By:	J.M	AUG 2025
Checked By:	L.R	AUG 2025
Approved By:	S.O	AUG 2025

DRAWING REVISIONS

No.	Revision Details	Reviewed	Initials	Date	Approved
		By			
		Checked			
		By			
		Checked			
		By			
		Checked			
		By			
		Checked			
		By			
		Checked			

MERU BYPASS-KEMU-KAMBAKIA ROADS

ROAD SIGNS LAYOUT

ROAD: KAGOTONE-KEMU LINK C91

CH 0+200 - CH 0+341

DRAWING SCALE:

H: 1:500
V: 1:50

DRAWING NO:

R S L - KAG/KEM - 0 0 2
Doc. Type | Nature of Work | Number

1.4 KONGOACHEKE JCT - KWA MUKURU JCT

ROAD SIGNS LAYOUT

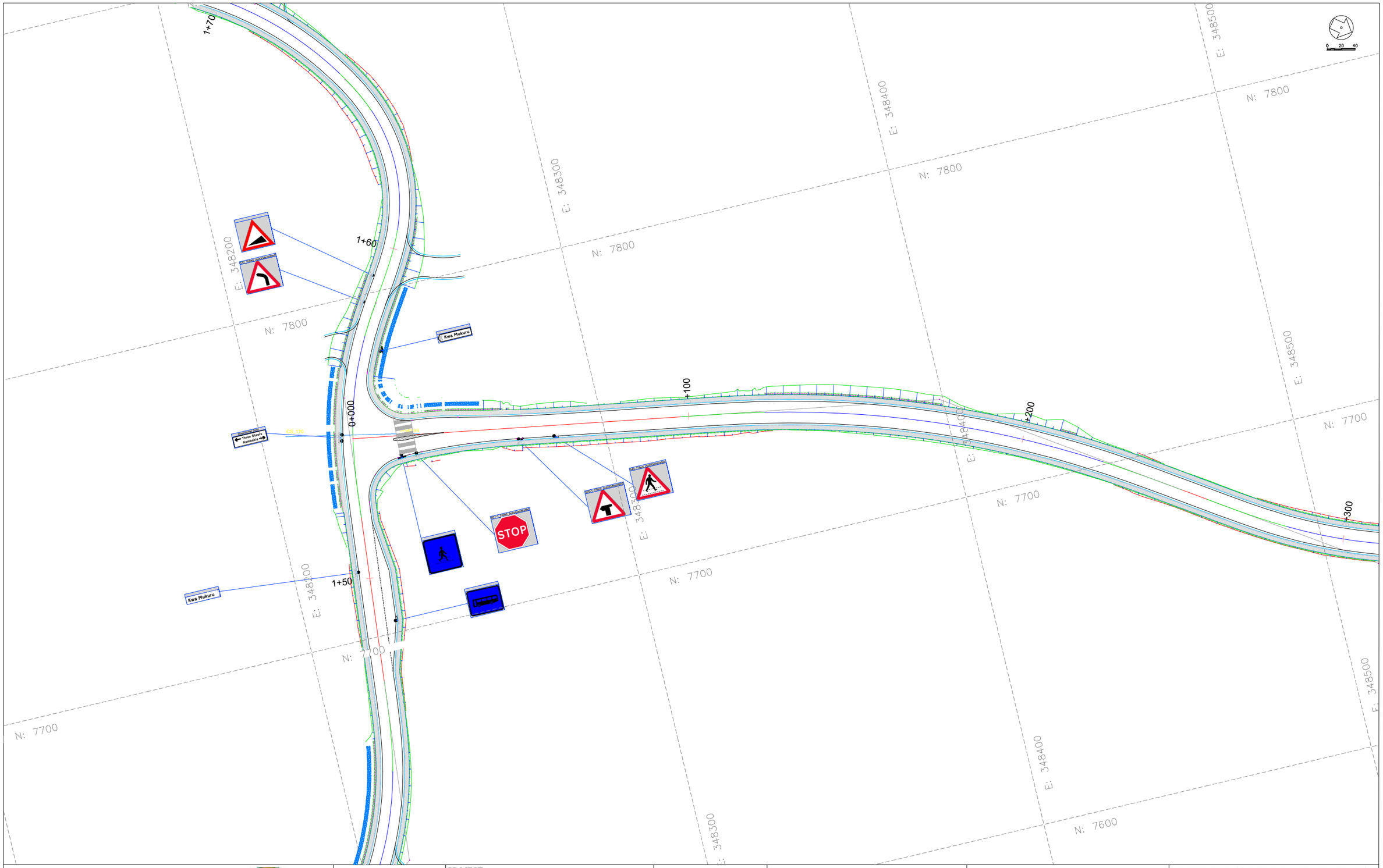

CLIENT:

KENYA NATIONAL HIGHWAY AUTHORITY
Barabara Plaza,
Off Airport South Road,
P. O. Box, 49712 - 00100,
NAIROBI.

KENYA URBAN ROADS AUTHORITY
Barabara Plaza,
Off Airport South Road,
P. O. Box, 49712 - 00100,
NAIROBI.

FINANCIER:

THE WORLD BANK

PROJECT:

HORN OF AFRICA GATEWAY DEVELOPMENT PROJECT (HOAGDP): -

Consultancy Services for the Design and Works Supervision for the Proposed Extension of Meru Bypass.

CONTRACT NO:

KeNHA/RD/CS/D/4205/2024

CONSULTANT:

egis

One Padmore Place 6th Floor,
George Padmore Road,
P. O. Box, 76672 - 00508,
NAIROBI.

DESIGN DETAILS

Action	Name	Date
Designed By:	S.A	AUG 2025
Drawn By:	J.M	AUG 2025
Checked By:	L.R	AUG 2025
Approved By:	S.O	AUG 2025

DRAWING REVISIONS

No.	Revision Details	Reviewed	Initials	Date	Approved
		By			
		Checked			
		By			
		Checked			
		By			
		Checked			
		By			
		Checked			
		By			
		Checked			

MERU BYPASS-KEMU-KAMBAKIA ROADS

ROAD SIGNS LAYOUT

ROAD: KONGOACHEKE JCT-KWA MUKURU JCT

CH 0+000 - CH 0+200

DRAWING SCALE:

H: 1:500
V: 1:50

DRAWING NO:

R S L - KOG/KWA - 0 0 1
Doc. Type | Nature of Work | Number

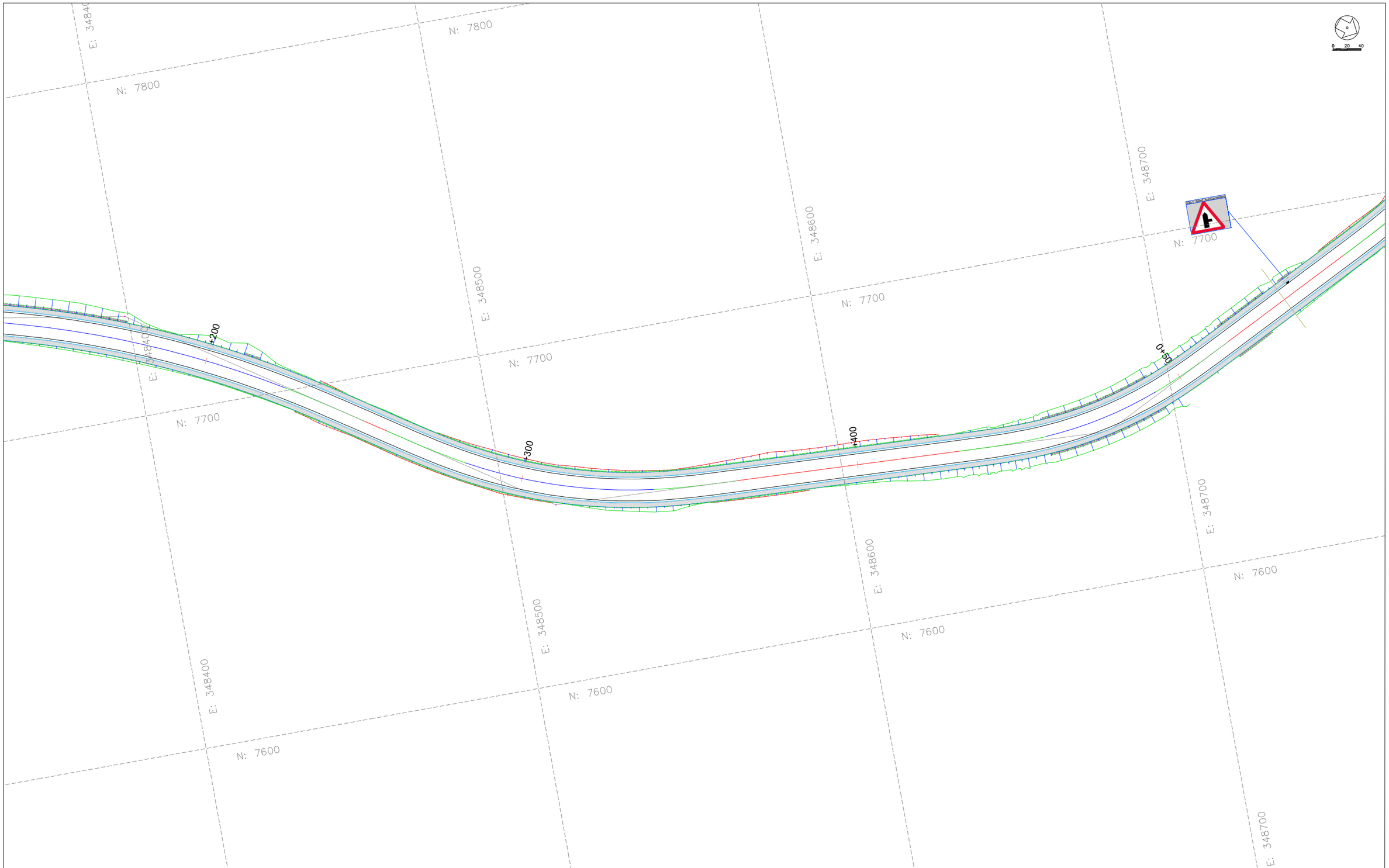

CLIENT:

KENYA NATIONAL HIGHWAY AUTHORITY
Barabara Plaza,
Off Airport South Road,
P. O. Box, 49712 - 00100,
NAIROBI.

KENYA URBAN ROADS AUTHORITY
Barabara Plaza,
Off Airport South Road,
P. O. Box, 49712 - 00100,
NAIROBI.

FINANCIER:

THE WORLD BANK

PROJECT:

HORN OF AFRICA GATEWAY DEVELOPMENT PROJECT (HOAGDP): -

Consultancy Services for the Design and Works Supervision for the Proposed Extension of Meru Bypass.

CONTRACT NO:

KeNHA/RD/CS/D/4205/2024

CONSULTANT:

egis

One Padmore Place 6th Floor,
George Padmore Road,
P. O. Box, 76672 - 00508,
NAIROBI.

DESIGN DETAILS

Action	Name	Date
Designed By:	S.A	AUG 2025
Drawn By:	J.M	AUG 2025
Checked By:	L.R	AUG 2025
Approved By:	S.O	AUG 2025

DRAWING REVISIONS

No.	Revision Details	Reviewed	Initials	Date	Approved
		By			
		Checked			
		By			
		Checked			
		By			
		Checked			
		By			
		Checked			
		By			
		Checked			

MERU BYPASS-KEMU-KAMBAKIA ROADS

ROAD SIGNS LAYOUT

ROAD: KONGOACHEKE JCT-KWA MUKURU JCT

CH 0+200 - CH 0+500

DRAWING SCALE:

H: 1:500
V: 1:50

DRAWING NO:

R S L - KOG/KWA - 0 0 2
Doc. Type | Nature of Work | Number

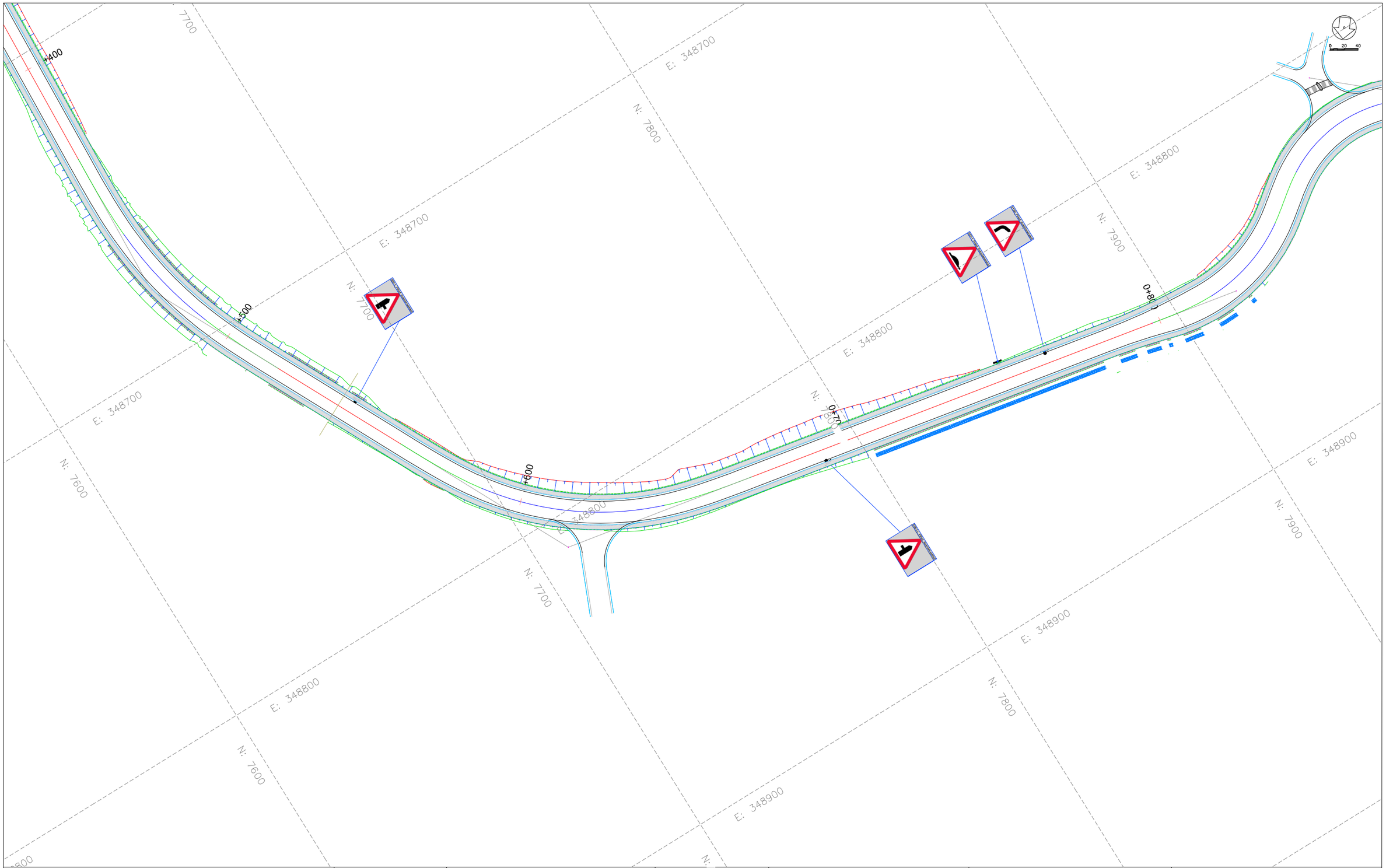

CLIENT:

KENYA NATIONAL HIGHWAY AUTHORITY
Barabara Plaza,
Off Airport South Road,
P. O. Box, 49712 - 00100,
NAIROBI.

KENYA URBAN ROADS AUTHORITY
Barabara Plaza,
Off Airport South Road,
P. O. Box, 49712 - 00100,
NAIROBI.

FINANCIER:

THE WORLD BANK

PROJECT:

HORN OF AFRICA GATEWAY DEVELOPMENT PROJECT (HOAGDP): -

Consultancy Services for the Design and Works Supervision for the Proposed Extension of Meru Bypass.

CONTRACT NO:

KeNHA/RD/CS/D/4205/2024

CONSULTANT:

One Padmore Place 6th Floor,
George Padmore Road,
P. O. Box, 76672 - 00508,
NAIROBI.

DESIGN DETAILS		
Action	Name	Date
Designed By:	S.A	AUG 2025
Drawn By:	J.M	AUG 2025
Checked By:	L.R	AUG 2025
Approved By:	S.O	AUG 2025

DRAWING REVISIONS					
No.	Revision Details	Reviewed	Initials	Date	Approved
		By			
		Checked			
		By			
		Checked			
		By			
		Checked			
		By			
		Checked			
		By			
		Checked			

MERU BYPASS-KEMU-KAMBAKIA ROADS

ROAD SIGNS LAYOUT

ROAD: KONGOACHEKE JCT-KWA MUKURU JCT

CH 0+500 - CH 0+800

DRAWING SCALE:

H: 1:500
V: 1:50

DRAWING NO:

R S L - KOG/KWA - 0 0 3
Doc. Type | Nature of Work | Number

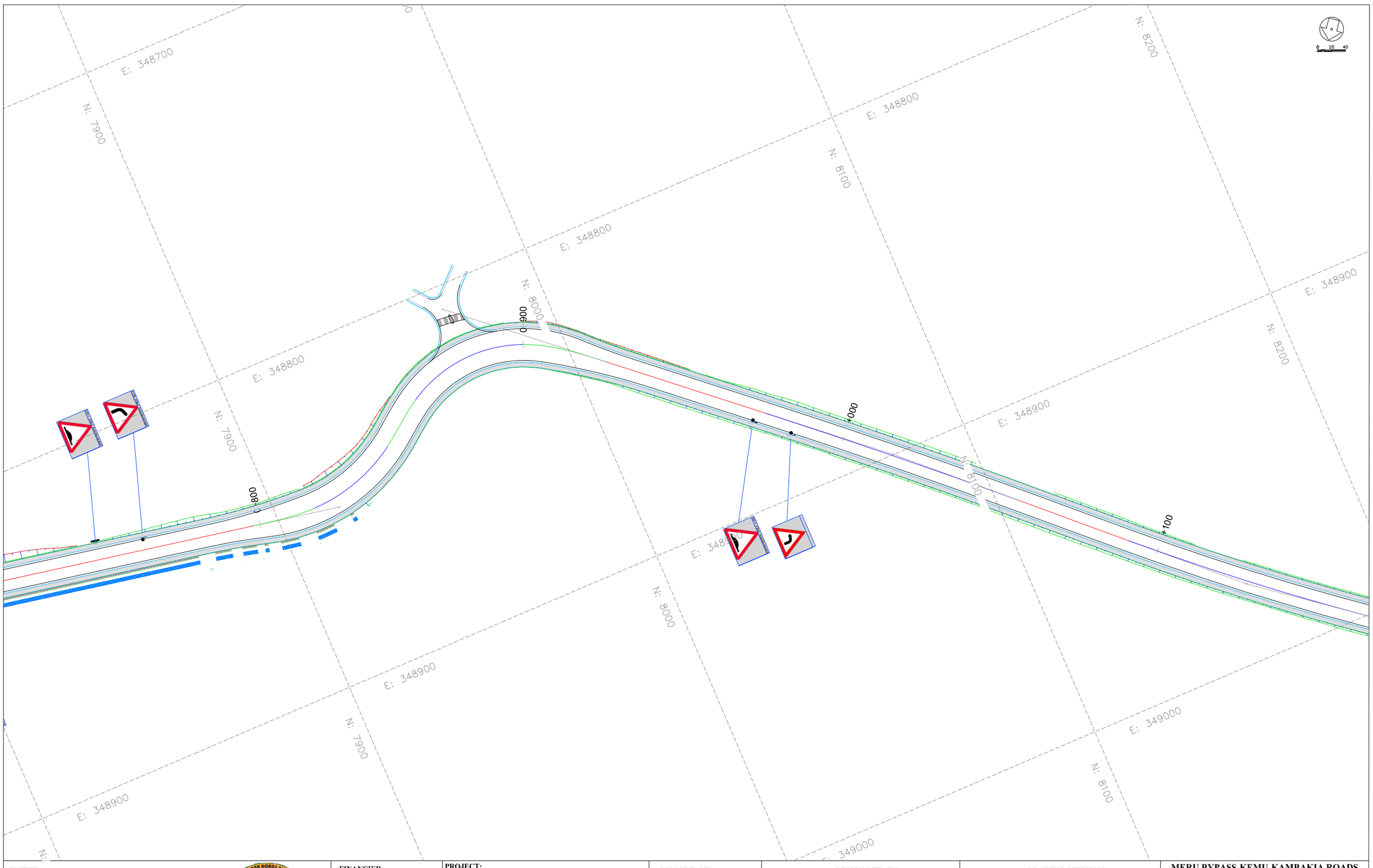

CLIENT: KENYA NATIONAL HIGHWAY AUTHORITY Barabara Plaza, Off Airport South Road, P. O. Box, 49712 - 00100, NAIROBI.	KENYA URBAN ROADS AUTHORITY Barabara Plaza, Off Airport South Road, P. O. Box, 49712 - 00100, NAIROBI.	**FINANCIER:** THE WORLD BANK
PROJECT: HORN OF AFRICA GATEWAY DEVELOPMENT PROJECT (HOAGDP): - Consultancy Services for the Design and Works Supervision for the Proposed Extension of Meru Bypass. **CONTRACT NO:** KeNHA/RD/CS/D/4205/2024	**CONSULTANT:** egis One Padmore Place 6th Floor, George Padmore Road, P. O. Box, 76672 - 00508, NAIROBI.	

DESIGN DETAILS

Action	Name	Date
Designed By:	S.A	AUG 2025
Drawn By:	J.M	AUG 2025
Checked By:	L.R	AUG 2025
Approved By:	S.O	AUG 2025

DRAWING REVISIONS

No.	Revision Details	Reviewed	Initials	Date	Approved
		By			
		Checked			
		By			
		Checked			
		By			
		Checked			
		By			
		Checked			
		By			
		Checked			

MERU BYPASS-KEMU-KAMBAKIA ROADS

ROAD SIGNS LAYOUT

ROAD: KONGOACHEKE JCT-KWA MUKURU JCT

CH 0+800 - CH 1+100

DRAWING SCALE: H: 1:500 V: 1:50

DRAWING NO: RSL-KOG/KWA-004 (Doc. Type - Nature of Work - Number)

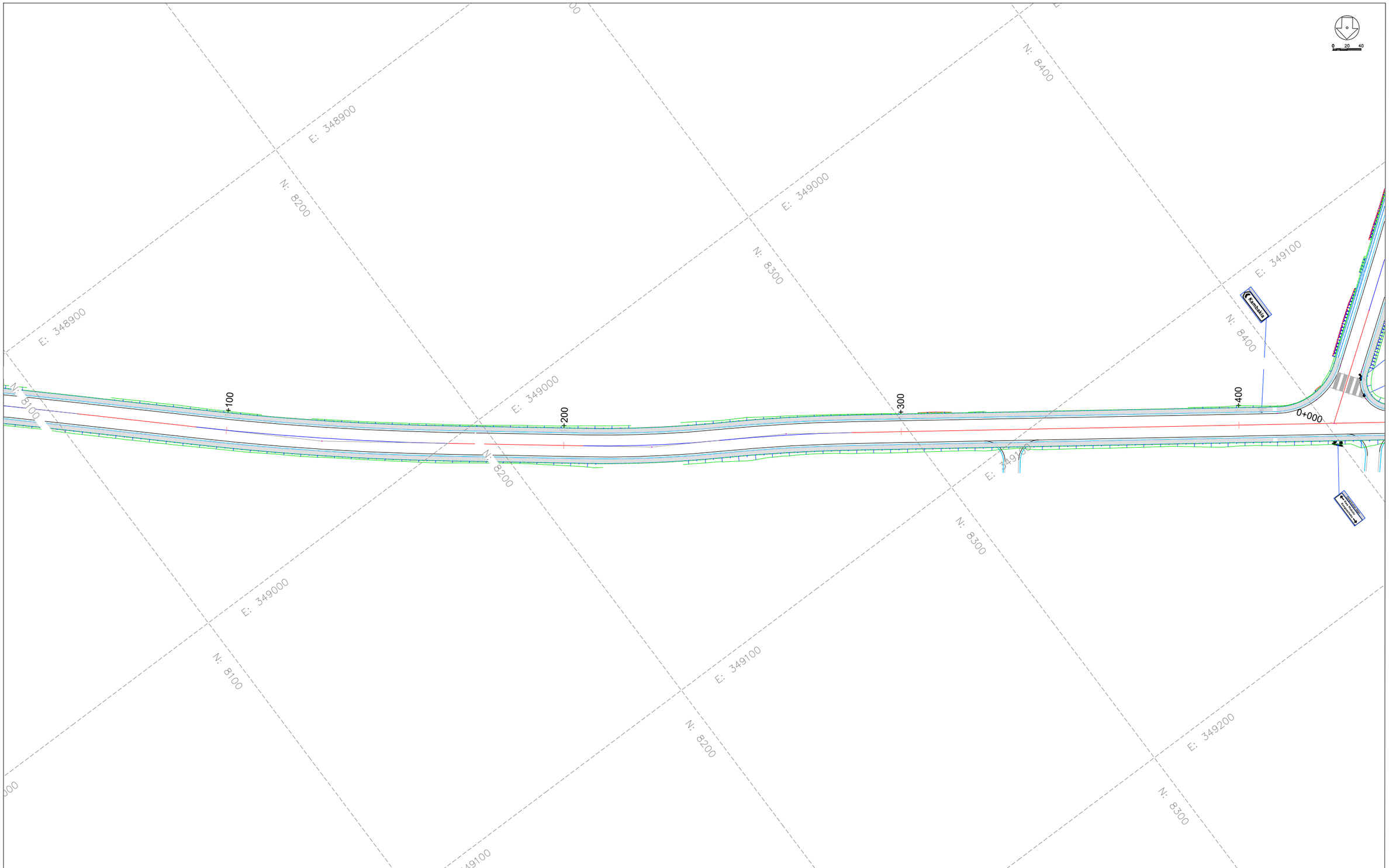

CLIENT:

KENYA NATIONAL HIGHWAY AUTHORITY
Barabara Plaza,
Off Airport South Road,
P. O. Box, 49712 - 00100,
NAIROBI.

KENYA URBAN ROADS AUTHORITY
Barabara Plaza,
Off Airport South Road,
P. O. Box, 49712 - 00100,
NAIROBI.

FINANCIER:

THE WORLD BANK

PROJECT:

HORN OF AFRICA GATEWAY DEVELOPMENT PROJECT (HOAGDP): -

Consultancy Services for the Design and Works Supervision for the Proposed Extension of Meru Bypass.

CONTRACT NO:

KeNHA/RD/CS/D/4205/2024

CONSULTANT:

egis

One Padmore Place 6th Floor,
George Padmore Road,
P. O. Box, 76672 - 00508,
NAIROBI.

DESIGN DETAILS

Action	Name	Date
Designed By:	S.A	AUG 2025
Drawn By:	J.M	AUG 2025
Checked By:	L.R	AUG 2025
Approved By:	S.O	AUG 2025

DRAWING REVISIONS

No.	Revision Details	Reviewed	Initials	Date	Approved
		By			
		Checked			
		By			
		Checked			
		By			
		Checked			
		By			
		Checked			
		By			
		Checked			

MERU BYPASS-KEMU-KAMBAKIA ROADS

ROAD SIGNS LAYOUT

ROAD: KONGOACHEKE JCT-KWA MUKURU JCT

CH 1+100 - CH 1+400

DRAWING SCALE:

H: 1:500
V: 1:50

DRAWING NO:

RSL-KOG/KWA-005
Doc. Type | Nature of Work | Number

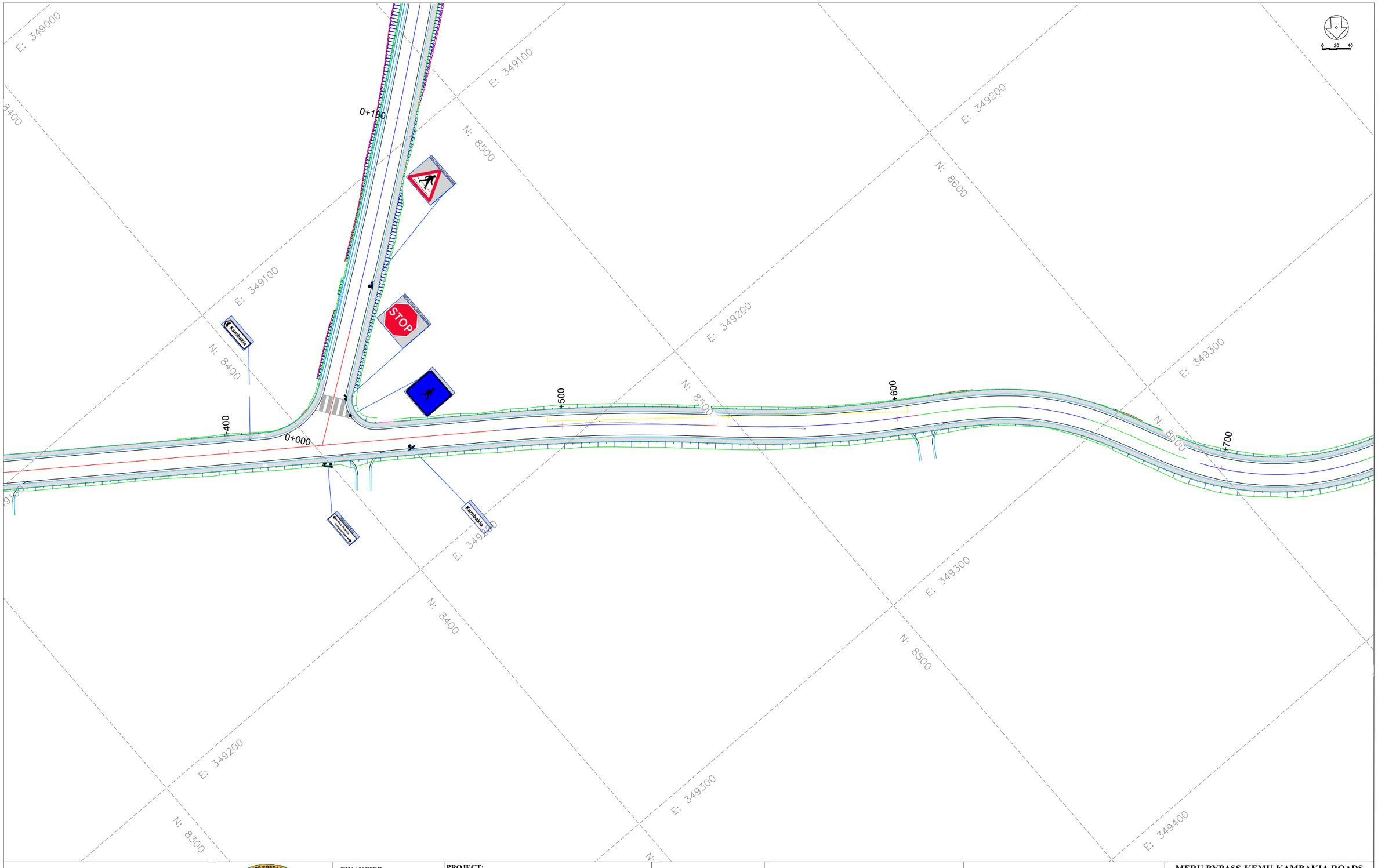

CLIENT:

KENYA NATIONAL HIGHWAY AUTHORITY
Barabara Plaza,
Off Airport South Road,
P. O. Box, 49712 - 00100,
NAIROBI.

KENYA URBAN ROADS AUTHORITY
Barabara Plaza,
Off Airport South Road,
P. O. Box, 49712 - 00100,
NAIROBI.

FINANCIER:

THE WORLD BANK

PROJECT:

HORN OF AFRICA GATEWAY DEVELOPMENT PROJECT (HOAGDP): -

Consultancy Services for the Design and Works Supervision for the Proposed Extension of Meru Bypass.

CONTRACT NO:

KeNHA/RD/CS/D/4205/2024

CONSULTANT:

One Padmore Place 6th Floor,
George Padmore Road,
P. O. Box, 76672 - 00508,
NAIROBI.

DESIGN DETAILS

Action	Name	Date
Designed By:	S.A	AUG 2025
Drawn By:	J.M	AUG 2025
Checked By:	L.R	AUG 2025
Approved By:	S.O	AUG 2025

DRAWING REVISIONS

No.	Revision Details	Reviewed	Initials	Date	Approved
		By			
		Checked			
		By			
		Checked			
		By			
		Checked			
		By			
		Checked			
		By			
		Checked			

MERU BYPASS-KEMU-KAMBAKIA ROADS

ROAD SIGNS LAYOUT

ROAD: KONGOACHEKE JCT-KWA MUKURU JCT

CH 1+400 - CH 1+700

DRAWING SCALE:

H: 1:500
V: 1:50

DRAWING NO:

RSL-KOG/KWA-006
Doc. Type | Nature of Work | Number

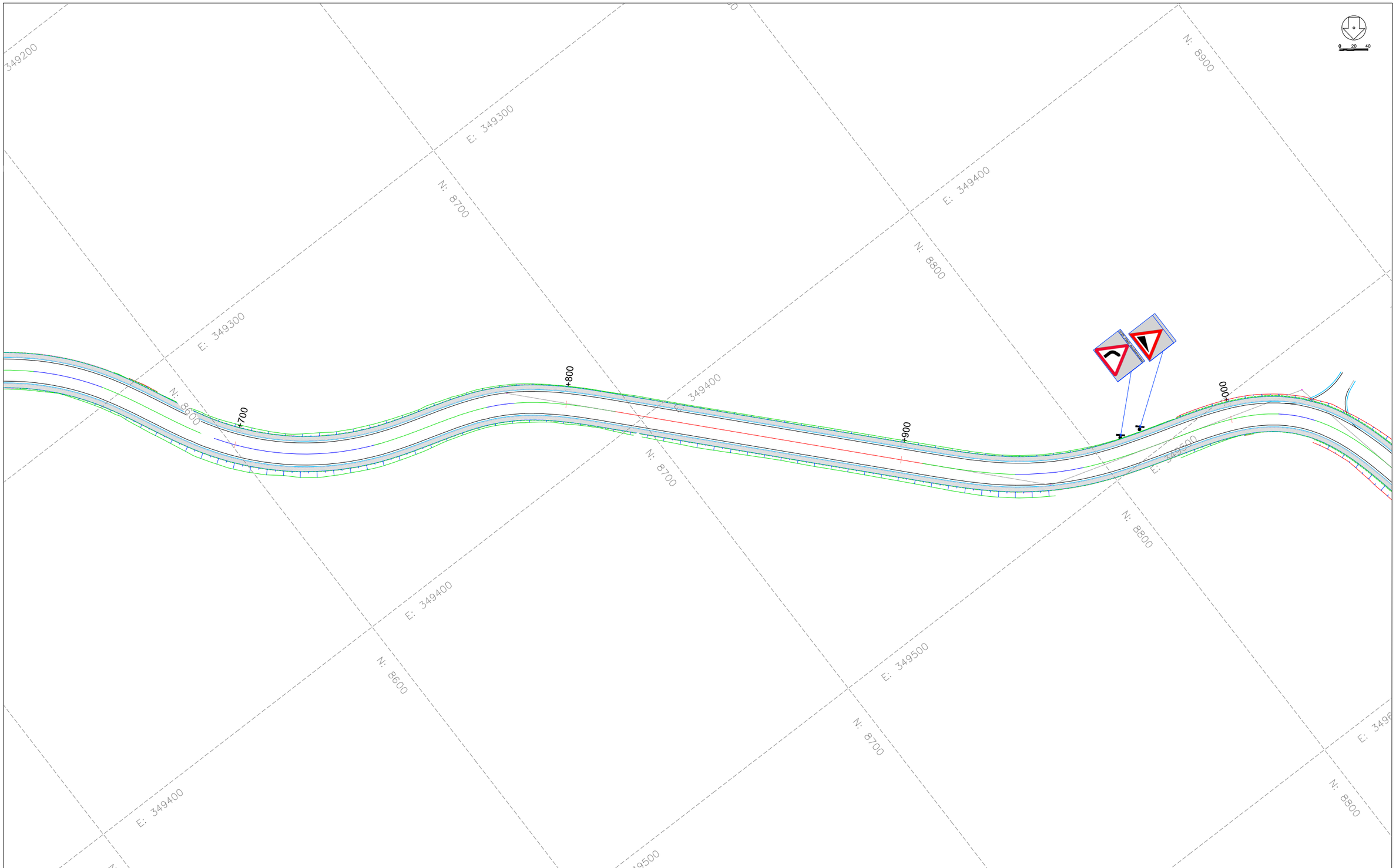

CLIENT:

KENYA NATIONAL HIGHWAY AUTHORITY
Barabara Plaza,
Off Airport South Road,
P. O. Box, 49712 - 00100,
NAIROBI.

KENYA URBAN ROADS AUTHORITY
Barabara Plaza,
Off Airport South Road,
P. O. Box, 49712 - 00100,
NAIROBI.

FINANCIER:

THE WORLD BANK

PROJECT:

HORN OF AFRICA GATEWAY DEVELOPMENT PROJECT (HOAGDP): -

Consultancy Services for the Design and Works Supervision for the Proposed Extension of Meru Bypass.

CONTRACT NO:

KeNHA/RD/CS/D/4205/2024

CONSULTANT:

One Padmore Place 6th Floor,
George Padmore Road,
P. O. Box, 76672 - 00508,
NAIROBI.

DESIGN DETAILS

Action	Name	Date
Designed By:	S.A	AUG 2025
Drawn By:	J.M	AUG 2025
Checked By:	L.R	AUG 2025
Approved By:	S.O	AUG 2025

DRAWING REVISIONS

No.	Revision Details	Reviewed	Initials	Date	Approved
		By			
		Checked			
		By			
		Checked			
		By			
		Checked			
		By			
		Checked			
		By			
		Checked			

MERU BYPASS-KEMU-KAMBAKIA ROADS

ROAD SIGNS LAYOUT

ROAD: KONGOACHEKE JCT-KWA MUKURU JCT

CH 1+700 - CH 2+000

DRAWING SCALE:

H: 1:500
V: 1:50

DRAWING NO:

RSL-KOG/KWA-007
Doc. Type | Nature of Work | Number



CLIENT:

KENYA NATIONAL HIGHWAY AUTHORITY
Barabara Plaza,
Off Airport South Road,
P. O. Box, 49712 - 00100,
NAIROBI.

KENYA URBAN ROADS AUTHORITY
Barabara Plaza,
Off Airport South Road,
P. O. Box, 49712 - 00100,
NAIROBI.

FINANCIER:

THE WORLD BANK

PROJECT:

HORN OF AFRICA GATEWAY DEVELOPMENT PROJECT (HOAGDP): -

Consultancy Services for the Design and Works Supervision for the Proposed Extension of Meru Bypass.

CONTRACT NO:

KeNHA/RD/CS/D/4205/2024

CONSULTANT:

One Padmore Place 6th Floor,
George Padmore Road,
P. O. Box, 76672 - 00508,
NAIROBI.

DESIGN DETAILS

Action	Name	Date
Designed By:	S.A	AUG 2025
Drawn By:	J.M	AUG 2025
Checked By:	L.R	AUG 2025
Approved By:	S.O	AUG 2025

DRAWING REVISIONS

No.	Revision Details	Reviewed	Initials	Date	Approved
		By			
		Checked			
		By			
		Checked			
		By			
		Checked			
		By			
		Checked			
		By			
		Checked			

MERU BYPASS-KEMU-KAMBAKIA ROADS

ROAD SIGNS LAYOUT

ROAD: KONGOACHEKE JCT-KWA MUKURU JCT

CH 2+000 - CH 2+300

DRAWING SCALE:

H: 1:500
V: 1:50

DRAWING NO:

R S L - KOG/KWA - 0 0 8
Doc. Type | Nature of Work | Number

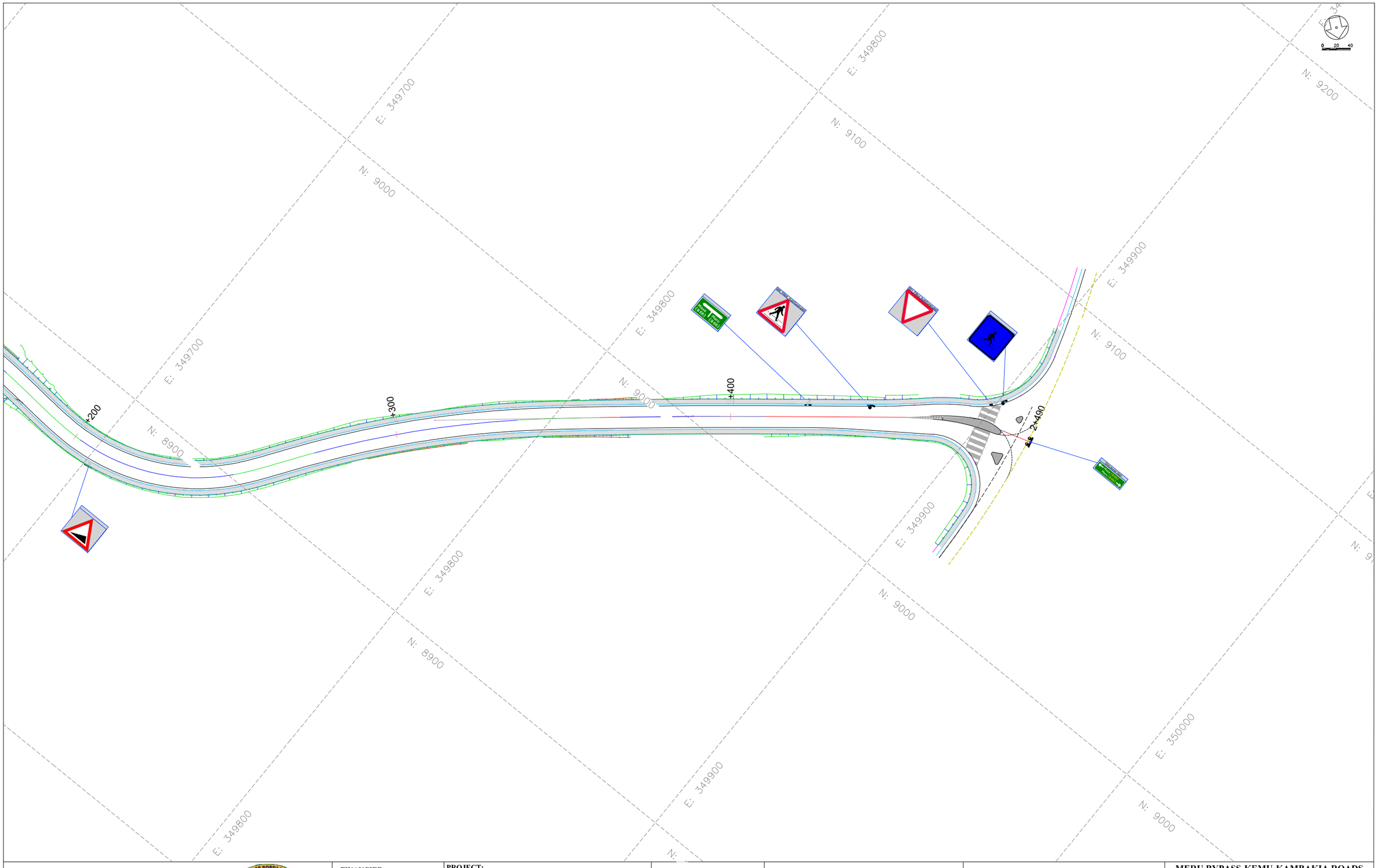

CLIENT:

KENYA NATIONAL HIGHWAY AUTHORITY
Barabara Plaza,
Off Airport South Road,
P. O. Box, 49712 - 00100,
NAIROBI.

KENYA URBAN ROADS AUTHORITY
Barabara Plaza,
Off Airport South Road,
P. O. Box, 49712 - 00100,
NAIROBI.

FINANCIER:

THE WORLD BANK

PROJECT:

HORN OF AFRICA GATEWAY DEVELOPMENT PROJECT (HOAGDP): -

Consultancy Services for the Design and Works Supervision for the Proposed Extension of Meru Bypass.

CONTRACT NO:

KeNHA/RD/CS/D/4205/2024

CONSULTANT:

egis

One Padmore Place 6th Floor,
George Padmore Road,
P. O. Box, 76672 - 00508,
NAIROBI.

DESIGN DETAILS

Action	Name	Date
Designed By:	S.A	AUG 2025
Drawn By:	J.M	AUG 2025
Checked By:	L.R	AUG 2025
Approved By:	S.O	AUG 2025

DRAWING REVISIONS

No.	Revision Details	Reviewed	Initials	Date	Approved
		By			
		Checked			
		By			
		Checked			
		By			
		Checked			
		By			
		Checked			
		By			
		Checked			

MERU BYPASS-KEMU-KAMBAKIA ROADS

ROAD SIGNS LAYOUT

ROAD: KONGOACHEKE JCT-KWA MUKURU JCT

CH 2+300 - CH 2+503

DRAWING SCALE:

H: 1:500
V: 1:50

DRAWING NO:

RSL - KOG/KWA - 009
Doc. Type | Nature of Work | Number

1.5 KONGO GARDENS - KAMBAKIA ROAD

ROAD SIGNS LAYOUT

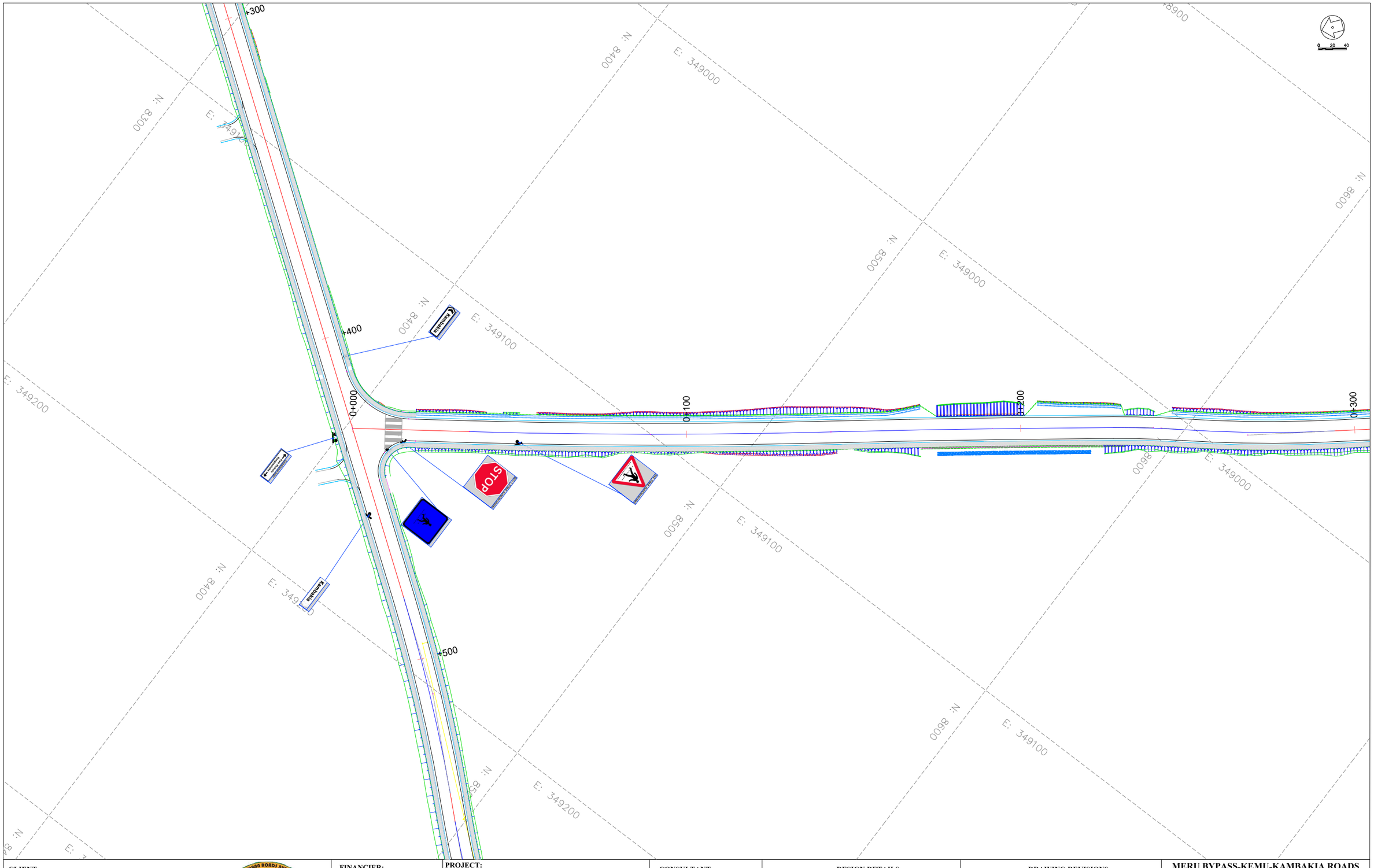

CLIENT:

KENYA NATIONAL HIGHWAY AUTHORITY
Barabara Plaza,
Off Airport South Road,
P. O. Box, 49712 - 00100,
NAIROBI.

KENYA URBAN ROADS AUTHORITY
Barabara Plaza,
Off Airport South Road,
P. O. Box, 49712 - 00100,
NAIROBI.

FINANCIER:

THE WORLD BANK

PROJECT:

HORN OF AFRICA GATEWAY DEVELOPMENT PROJECT (HOAGDP): -

Consultancy Services for the Design and Works Supervision for the Proposed Extension of Meru Bypass.

CONTRACT NO:

KeNHA/RD/CS/D/4205/2024

CONSULTANT:

egis

One Padmore Place 6th Floor,
George Padmore Road,
P. O. Box, 76672 - 00508,
NAIROBI.

DESIGN DETAILS

Action	Name	Date
Designed By:	S.A	AUG 2025
Drawn By:	J.M	AUG 2025
Checked By:	L.R	AUG 2025
Approved By:	S.O	AUG 2025

DRAWING REVISIONS

No.	Revision Details	Reviewed	Initials	Date	Approved
		By			
		Checked			
		By			
		Checked			
		By			
		Checked			
		By			
		Checked			
		By			
		Checked			

MERU BYPASS-KEMU-KAMBAKIA ROADS

ROAD SIGNS LAYOUT

ROAD: KONGO GARDENS-KAMBAKIA LINK

CH 0+000 - CH 0+200

DRAWING SCALE:

H: 1:500
V: 1:50

DRAWING NO:

RSL - GAR/KAM - 001
Doc. Type | Nature of Work | Number

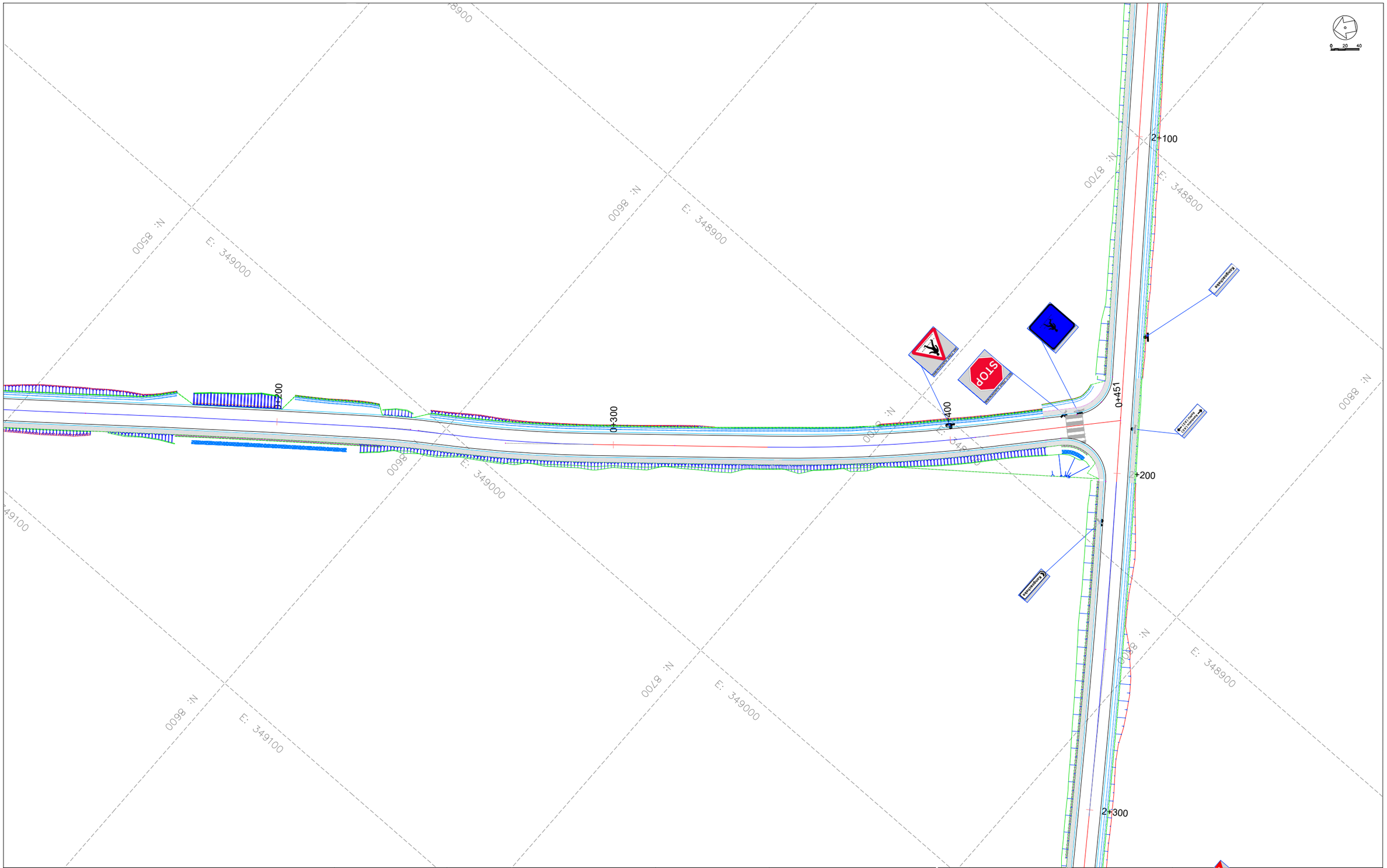

CLIENT:

KENYA NATIONAL HIGHWAY AUTHORITY
Barabara Plaza,
Off Airport South Road,
P. O. Box, 49712 - 00100,
NAIROBI.

KENYA URBAN ROADS AUTHORITY
Barabara Plaza,
Off Airport South Road,
P. O. Box, 49712 - 00100,
NAIROBI.

FINANCIER:

THE WORLD BANK

PROJECT:

HORN OF AFRICA GATEWAY DEVELOPMENT PROJECT (HOAGDP): -

Consultancy Services for the Design and Works Supervision for the Proposed Extension of Meru Bypass.

CONTRACT NO:

KeNHA/RD/CS/D/4205/2024

CONSULTANT:

egis

One Padmore Place 6th Floor,
George Padmore Road,
P. O. Box, 76672 - 00508,
NAIROBI.

DESIGN DETAILS

Action	Name	Date
Designed By:	S.A	AUG 2025
Drawn By:	J.M	AUG 2025
Checked By:	L.R	AUG 2025
Approved By:	S.O	AUG 2025

DRAWING REVISIONS

No.	Revision Details	Reviewed	Initials	Date	Approved
		By			
		Checked			
		By			
		Checked			
		By			
		Checked			
		By			
		Checked			
		By			
		Checked			

MERU BYPASS-KEMU-KAMBAKIA ROADS

ROAD SIGNS LAYOUT

ROAD: KONGO GARDENS-KAMBAKIA LINK

CH 0+200 - CH 0+447

DRAWING SCALE:

H: 1:500
V: 1:50

DRAWING NO:

RSL - GAR/KAM - 002
Doc. Type | Nature of Work | Number

MERU BY-PASS ROADS

2. RUNOGONE-KAITHE ROADS

ROAD SIGNS LAYOUT

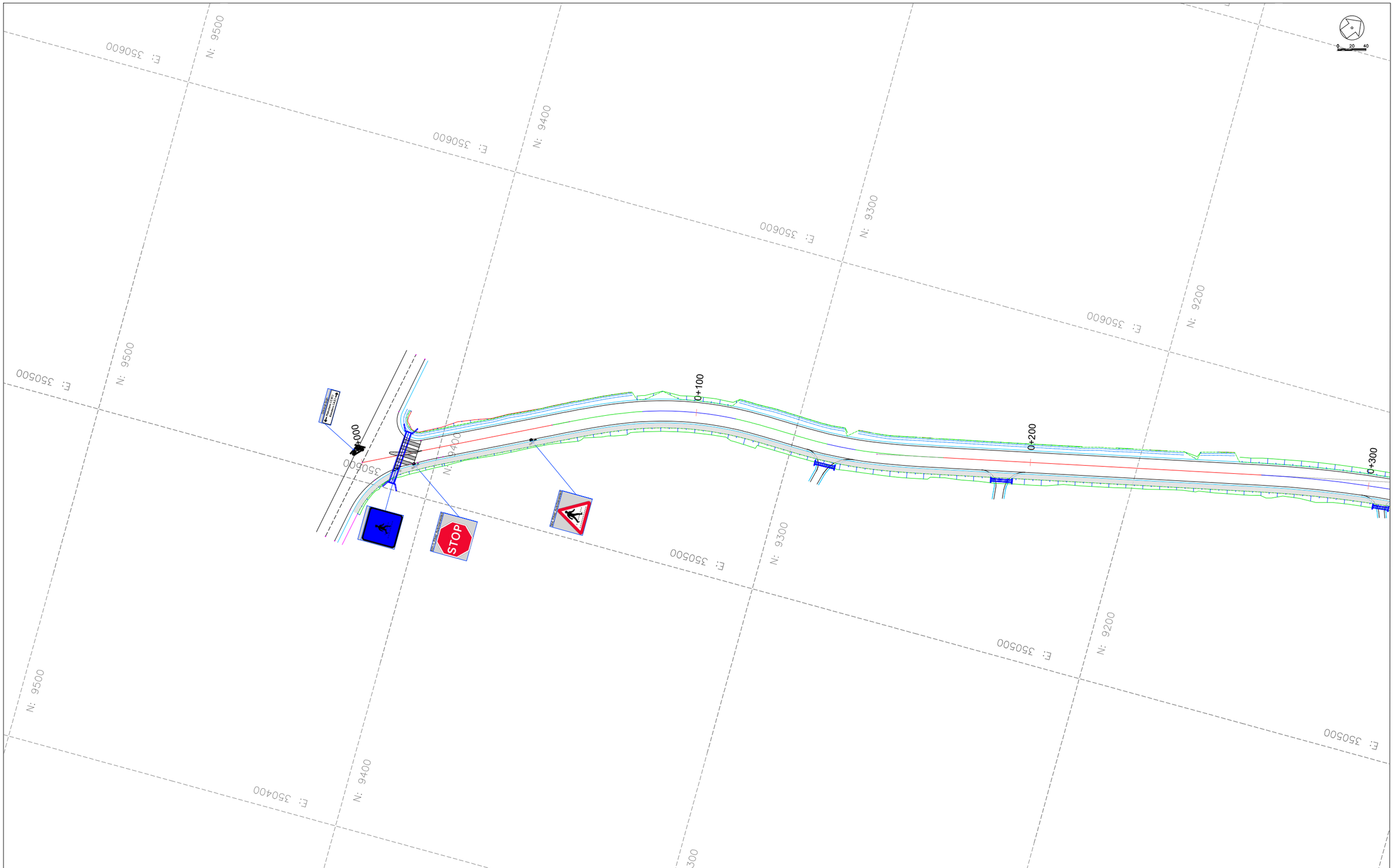

CLIENT:

KENYA NATIONAL HIGHWAY AUTHORITY
Barabara Plaza,
Off Airport South Road,
P. O. Box, 49712 - 00100,
NAIROBI.

KENYA URBAN ROADS AUTHORITY
Barabara Plaza,
Off Airport South Road,
P. O. Box, 49712 - 00100,
NAIROBI.

FINANCIER:

THE WORLD BANK

PROJECT:

HORN OF AFRICA GATEWAY DEVELOPMENT PROJECT (HOAGDP): -

Consultancy Services for the Design and Works Supervision for the Proposed Extension of Meru Bypass.

CONTRACT NO:

KeNHA/RD/CS/D/4205/2024

CONSULTANT:

egis

One Padmore Place 6th Floor,
George Padmore Road,
P. O. Box, 76672 - 00508,
NAIROBI.

DESIGN DETAILS

Action	Name	Date
Designed By:	S.A	AUG 2025
Drawn By:	J.M	AUG 2025
Checked By:	L.R	AUG 2025
Approved By:	S.O	AUG 2025

DRAWING REVISIONS

No.	Revision Details	Reviewed	Initials	Date	Approved
		By			
		Checked			
		By			
		Checked			
		By			
		Checked			
		By			
		Checked			
		By			
		Checked			

MERU BYPASS-RUNOGONE-KAITHE

ROAD SIGNS LAYOUT

ROAD: RUNOGONE-KAITHE

CH 0+000 - CH 0+200

DRAWING SCALE:

H: 1:500
V: 1:50

DRAWING NO:

RSL-RUN/KAI-001

Doc. Type | Nature of Work | Number

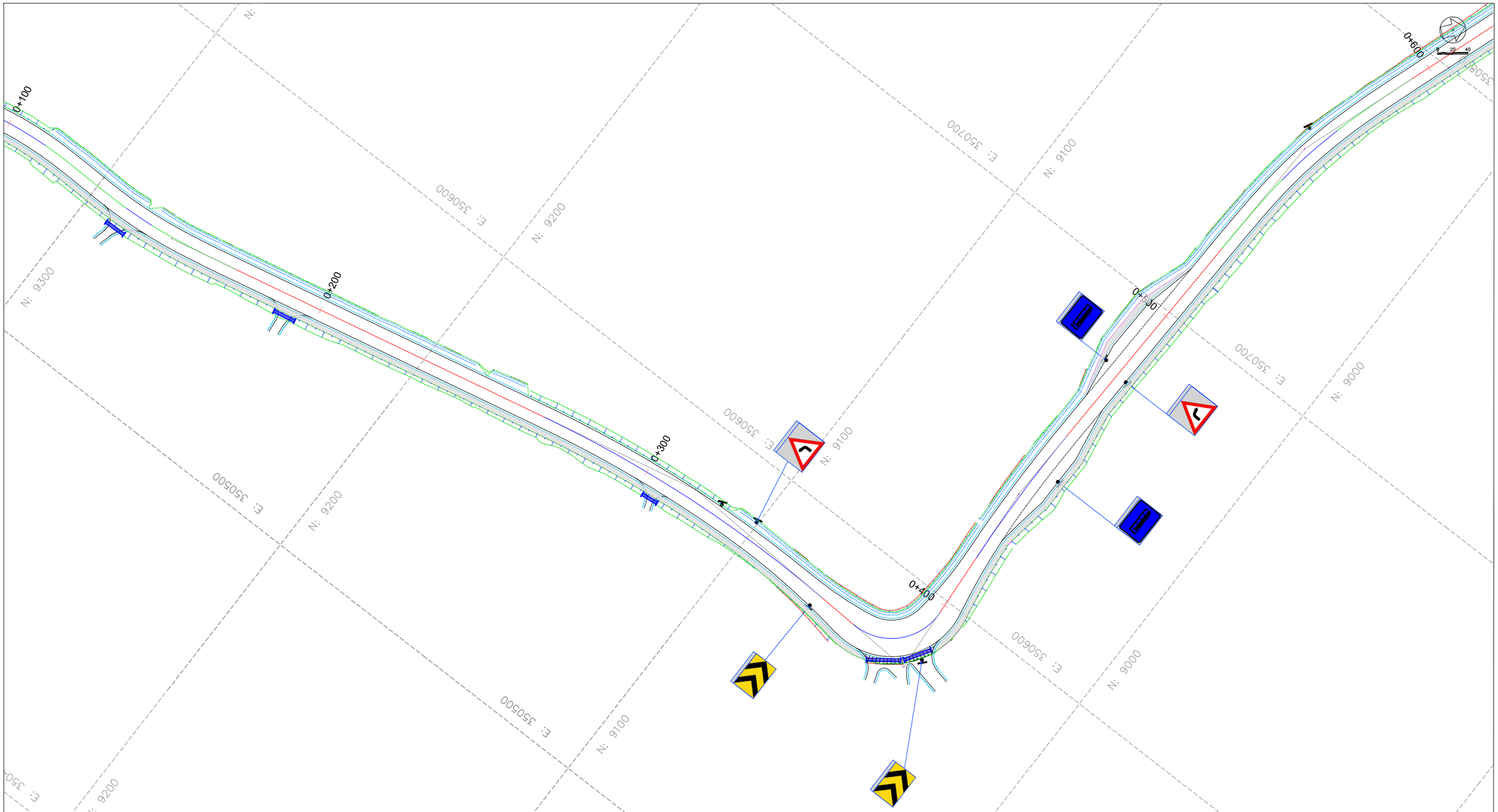

CLIENT:

KENYA NATIONAL HIGHWAY AUTHORITY
Barabara Plaza,
Off Airport South Road,
P. O. Box, 49712 - 00100,
NAIROBI.

KENYA URBAN ROADS AUTHORITY
Barabara Plaza,
Off Airport South Road,
P. O. Box, 49712 - 00100,
NAIROBI.

FINANCIER:

THE WORLD BANK

PROJECT:

HORN OF AFRICA GATEWAY DEVELOPMENT PROJECT (HOAGDP): -

Consultancy Services for the Design and Works Supervision for the Proposed Extension of Meru Bypass.

CONTRACT NO:

KeNHA/RD/CS/D/4205/2024

CONSULTANT:

One Padmore Place 6th Floor,
George Padmore Road,
P. O. Box, 76672 - 00508,
NAIROBI.

DESIGN DETAILS

Action	Name	Date
Designed By:	S.A	AUG 2025
Drawn By:	J.M	AUG 2025
Checked By:	L.R	AUG 2025
Approved By:	S.O	AUG 2025

DRAWING REVISIONS

No.	Revision Details	Reviewed	Initials	Date	Approved
		By			
		Checked			
		By			
		Checked			
		By			
		Checked			
		By			
		Checked			
		By			
		Checked			

MERU BYPASS-RUNOGONE-KAITHE

ROAD SIGNS LAYOUT

ROAD: RUNOGONE-KAITHE

CH 0+200 - CH 0+500

DRAWING SCALE:

H: 1:500
V: 1:50

DRAWING NO:

R S L - RUN/KAI - 0 0 2

Doc. Type | Nature of Work | Number

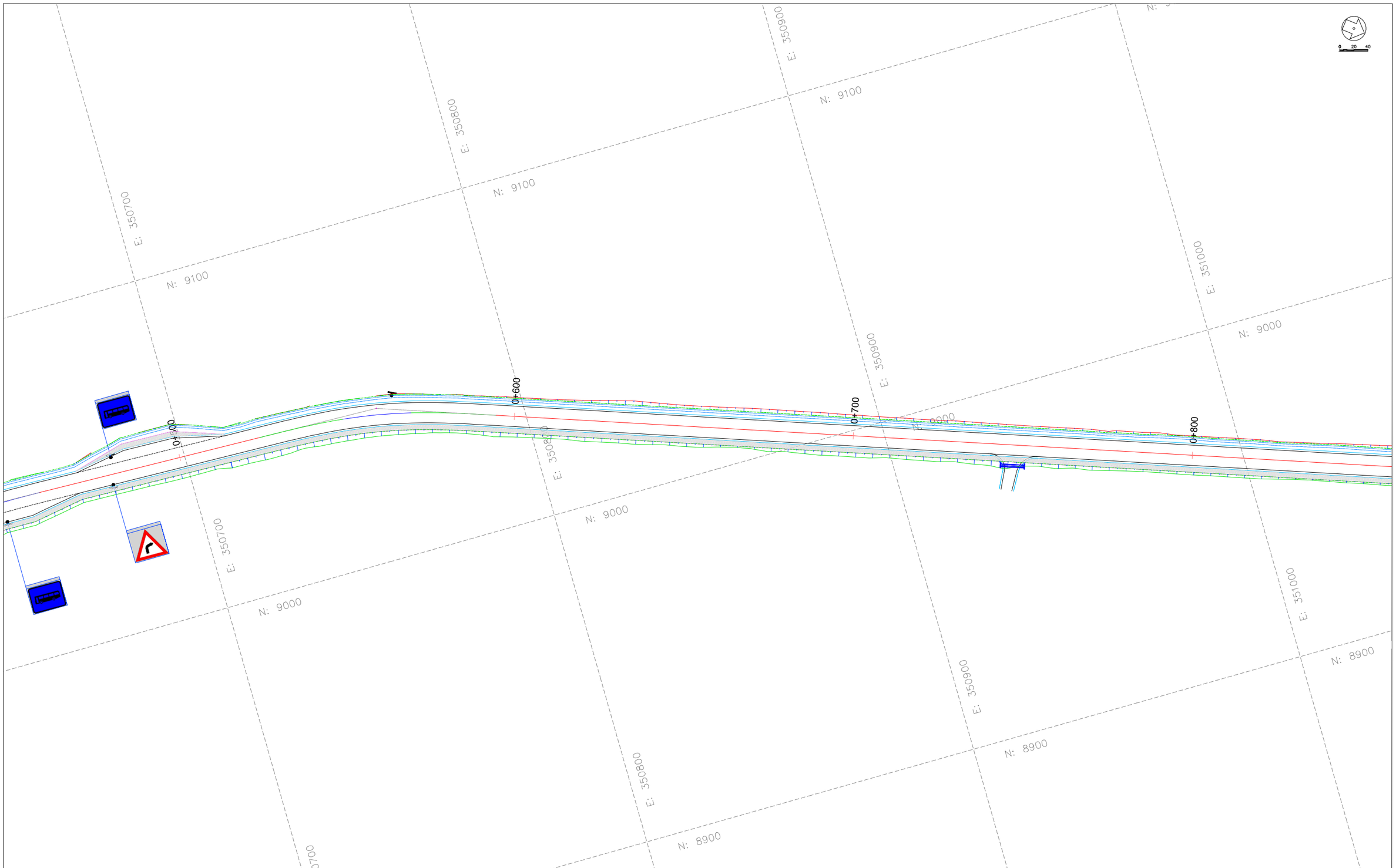

CLIENT:

KENYA NATIONAL HIGHWAY AUTHORITY
Barabara Plaza,
Off Airport South Road,
P. O. Box, 49712 - 00100,
NAIROBI.

KENYA URBAN ROADS AUTHORITY
Barabara Plaza,
Off Airport South Road,
P. O. Box, 49712 - 00100,
NAIROBI.

FINANCIER:

THE WORLD BANK

PROJECT:

HORN OF AFRICA GATEWAY DEVELOPMENT PROJECT (HOAGDP): -

Consultancy Services for the Design and Works Supervision for the Proposed Extension of Meru Bypass.

CONTRACT NO:

KeNHA/RD/CS/D/4205/2024

CONSULTANT:

egis

One Padmore Place 6th Floor,
George Padmore Road,
P. O. Box, 76672 - 00508,
NAIROBI.

DESIGN DETAILS

Action	Name	Date
Designed By:	S.A	AUG 2025
Drawn By:	J.M	AUG 2025
Checked By:	L.R	AUG 2025
Approved By:	S.O	AUG 2025

DRAWING REVISIONS

No.	Revision Details	Reviewed	Initials	Date	Approved
		By			
		Checked			
		By			
		Checked			
		By			
		Checked			
		By			
		Checked			
		By			
		Checked			

MERU BYPASS-RUNOGONE-KAITHE

ROAD SIGNS LAYOUT

ROAD: RUNOGONE-KAITHE

CH 0+500 - CH 0+800

DRAWING SCALE:

H: 1:500
V: 1:50

DRAWING NO:

RSL - RUN/KAI - 003

Doc. Type | Nature of Work | Number

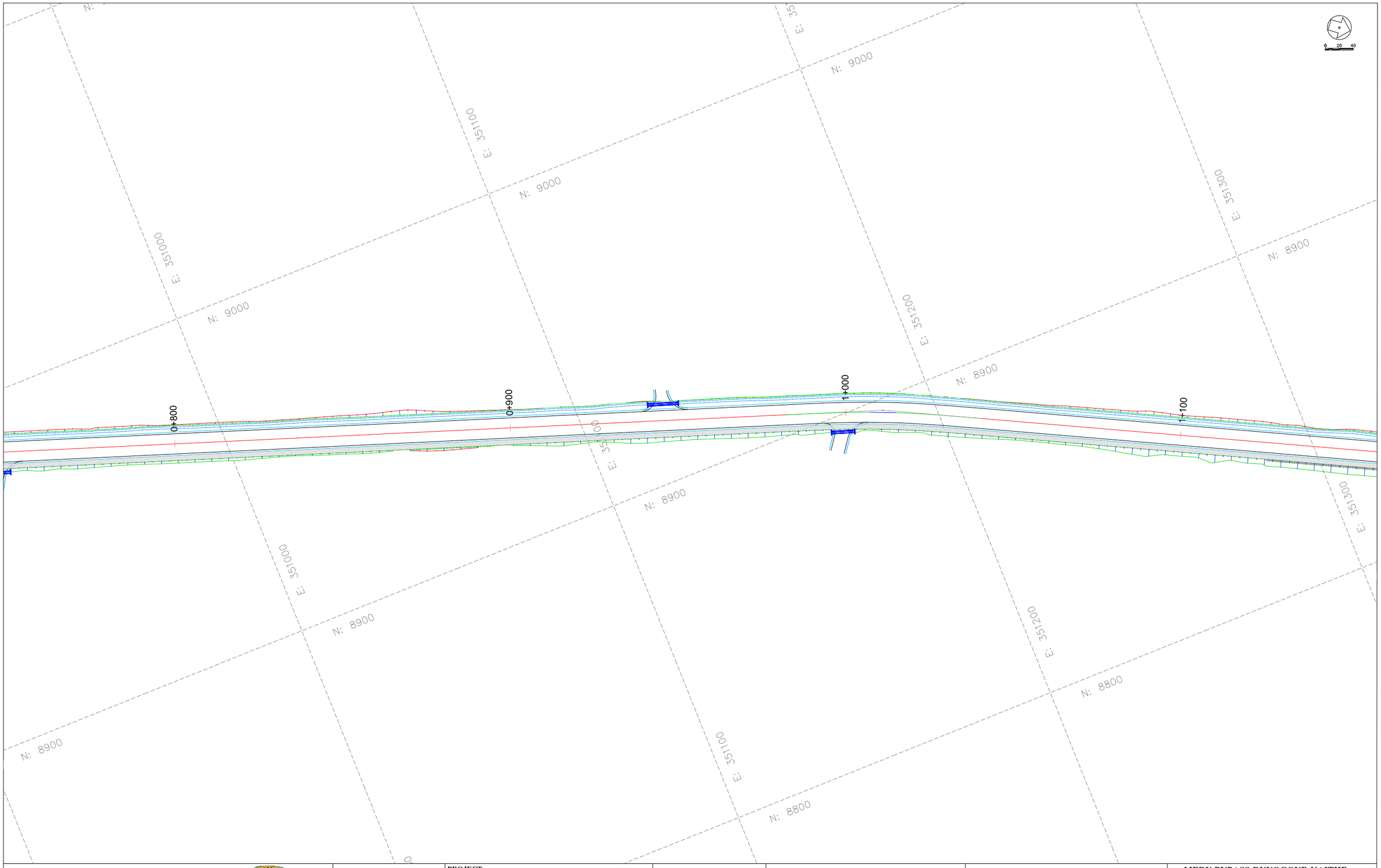

CLIENT:

KENYA NATIONAL HIGHWAY AUTHORITY
Barabara Plaza,
Off Airport South Road,
P. O. Box, 49712 - 00100,
NAIROBI.

KENYA URBAN ROADS AUTHORITY
Barabara Plaza,
Off Airport South Road,
P. O. Box, 49712 - 00100,
NAIROBI.

FINANCIER:

THE WORLD BANK

PROJECT:

HORN OF AFRICA GATEWAY DEVELOPMENT PROJECT (HOAGDP): -

Consultancy Services for the Design and Works Supervision for the Proposed Extension of Meru Bypass.

CONTRACT NO:

KeNHA/RD/CS/D/4205/2024

CONSULTANT:

egis

One Padmore Place 6th Floor,
George Padmore Road,
P. O. Box, 76672 - 00508,
NAIROBI.

DESIGN DETAILS

Action	Name	Date
Designed By:	S.A	AUG 2025
Drawn By:	J.M	AUG 2025
Checked By:	L.R	AUG 2025
Approved By:	S.O	AUG 2025

DRAWING REVISIONS

No.	Revision Details	Reviewed	Initials	Date	Approved
		By			
		Checked			
		By			
		Checked			
		By			
		Checked			
		By			
		Checked			
		By			
		Checked			

MERU BYPASS-RUNOGONE-KAITHE

ROAD SIGNS LAYOUT

ROAD: RUNOGONE-KAITHE

CH 0+800 - CH 1+100

DRAWING SCALE:

H: 1:500
V: 1:50

DRAWING NO:

RSL-RUN/KAI-004
Doc. Type | Nature of Work | Number

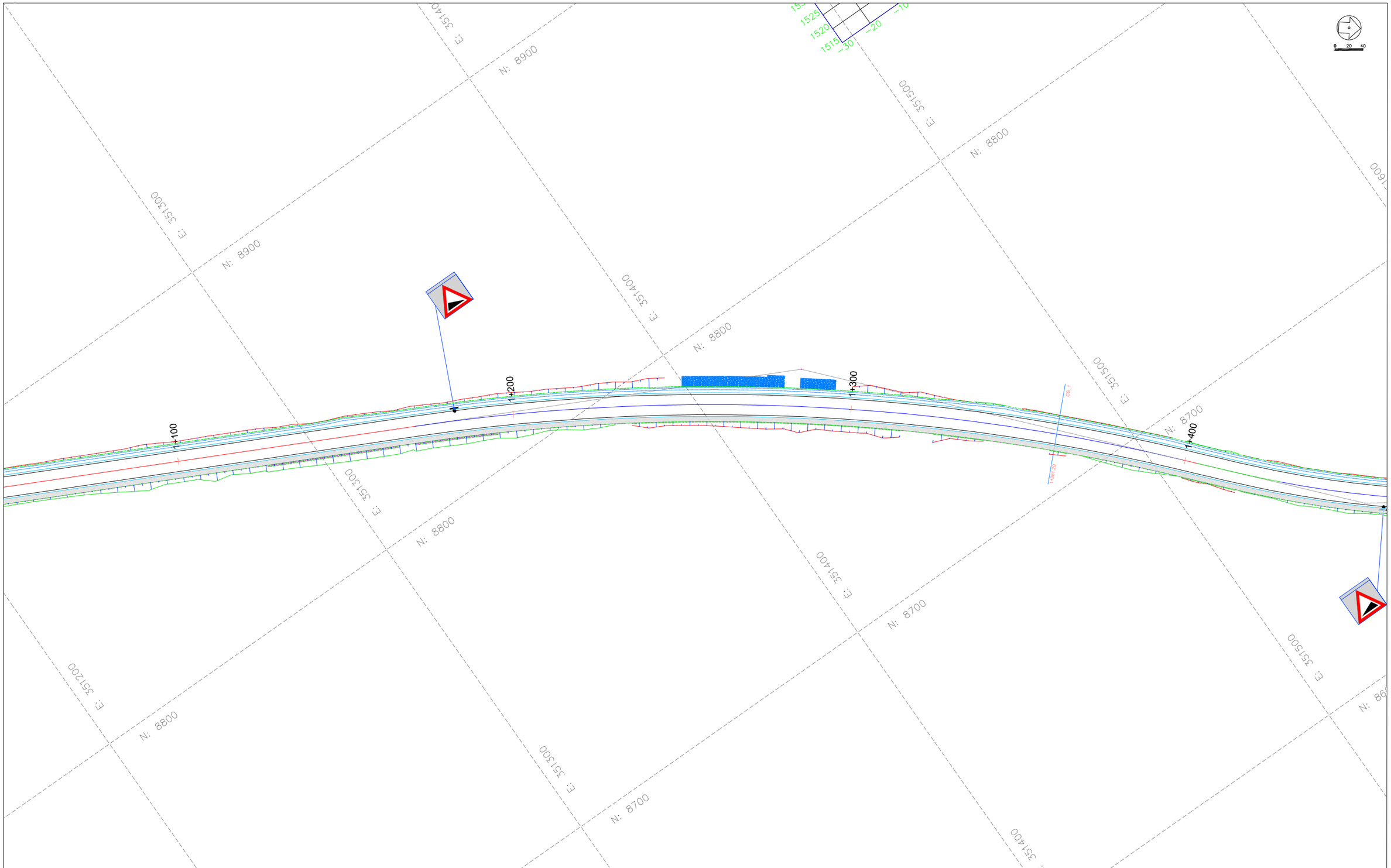

CLIENT:

KENYA NATIONAL HIGHWAY AUTHORITY
Barabara Plaza,
Off Airport South Road,
P. O. Box, 49712 - 00100,
NAIROBI.

KENYA URBAN ROADS AUTHORITY
Barabara Plaza,
Off Airport South Road,
P. O. Box, 49712 - 00100,
NAIROBI.

FINANCIER:

THE WORLD BANK

PROJECT:

HORN OF AFRICA GATEWAY DEVELOPMENT PROJECT (HOAGDP): -

Consultancy Services for the Design and Works Supervision for the Proposed Extension of Meru Bypass.

CONTRACT NO:

KeNHA/RD/CS/D/4205/2024

CONSULTANT:

egis

One Padmore Place 6th Floor,
George Padmore Road,
P. O. Box, 76672 - 00508,
NAIROBI.

DESIGN DETAILS

Action	Name	Date
Designed By:	S.A	AUG 2025
Drawn By:	J.M	AUG 2025
Checked By:	L.R	AUG 2025
Approved By:	S.O	AUG 2025

DRAWING REVISIONS

No.	Revision Details	Reviewed	Initials	Date	Approved
		By			
		Checked			
		By			
		Checked			
		By			
		Checked			
		By			
		Checked			
		By			
		Checked			

MERU BYPASS-RUNOGONE-KAITHE

ROAD SIGNS LAYOUT

ROAD: RUNOGONE-KAITHE

CH 1+100 - CH 1+400

DRAWING SCALE:

H: 1:500
V: 1:50

DRAWING NO:

R S L - RUN/KAI - 0 0 5

Doc. Type | Nature of Work | Number

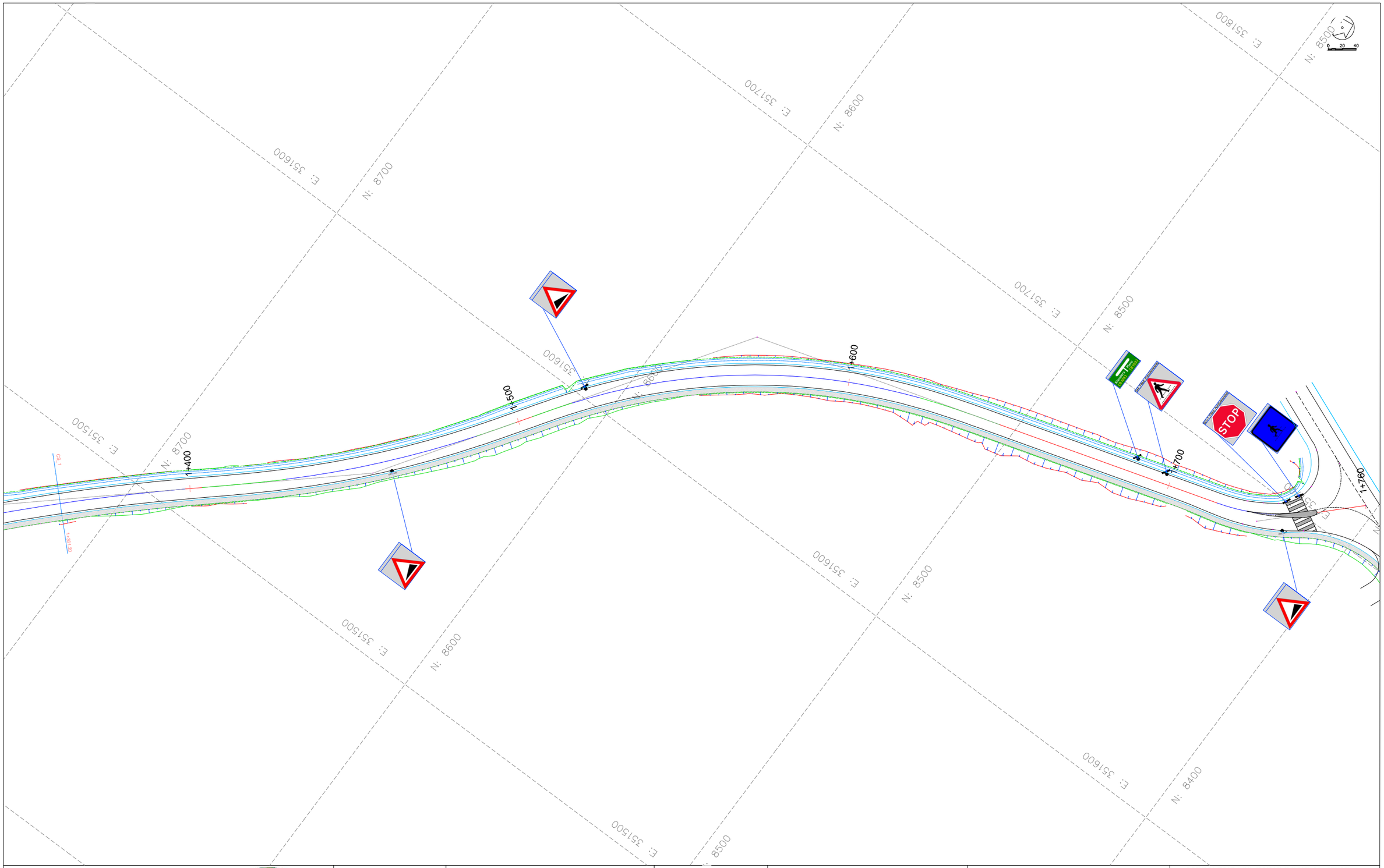

CLIENT:

KENYA NATIONAL HIGHWAY AUTHORITY
Barabara Plaza,
Off Airport South Road,
P. O. Box, 49712 - 00100,
NAIROBI.

KENYA URBAN ROADS AUTHORITY
Barabara Plaza,
Off Airport South Road,
P. O. Box, 49712 - 00100,
NAIROBI.

FINANCIER:

THE WORLD BANK

PROJECT:

HORN OF AFRICA GATEWAY DEVELOPMENT PROJECT (HOAGDP): -

Consultancy Services for the Design and Works Supervision for the Proposed Extension of Meru Bypass.

CONTRACT NO:

KeNHA/RD/CS/D/4205/2024

CONSULTANT:

egis

One Padmore Place 6th Floor,
George Padmore Road,
P. O. Box, 76672 - 00508,
NAIROBI.

DESIGN DETAILS

Action	Name	Date
Designed By:	S.A	AUG 2025
Drawn By:	J.M	AUG 2025
Checked By:	L.R	AUG 2025
Approved By:	S.O	AUG 2025

DRAWING REVISIONS

No.	Revision Details	Reviewed	Initials	Date	Approved
		By			
		Checked			
		By			
		Checked			
		By			
		Checked			
		By			
		Checked			
		By			
		Checked			

MERU BYPASS-RUNOGONE-KAITHE

ROAD SIGNS LAYOUT

ROAD: RUNOGONE-KAITHE

CH 1+400 - CH 1+760

DRAWING SCALE:

H: 1:500
V: 1:50

DRAWING NO:

RSL - RUN/KAI - 006

Doc. Type | Nature of Work | Number

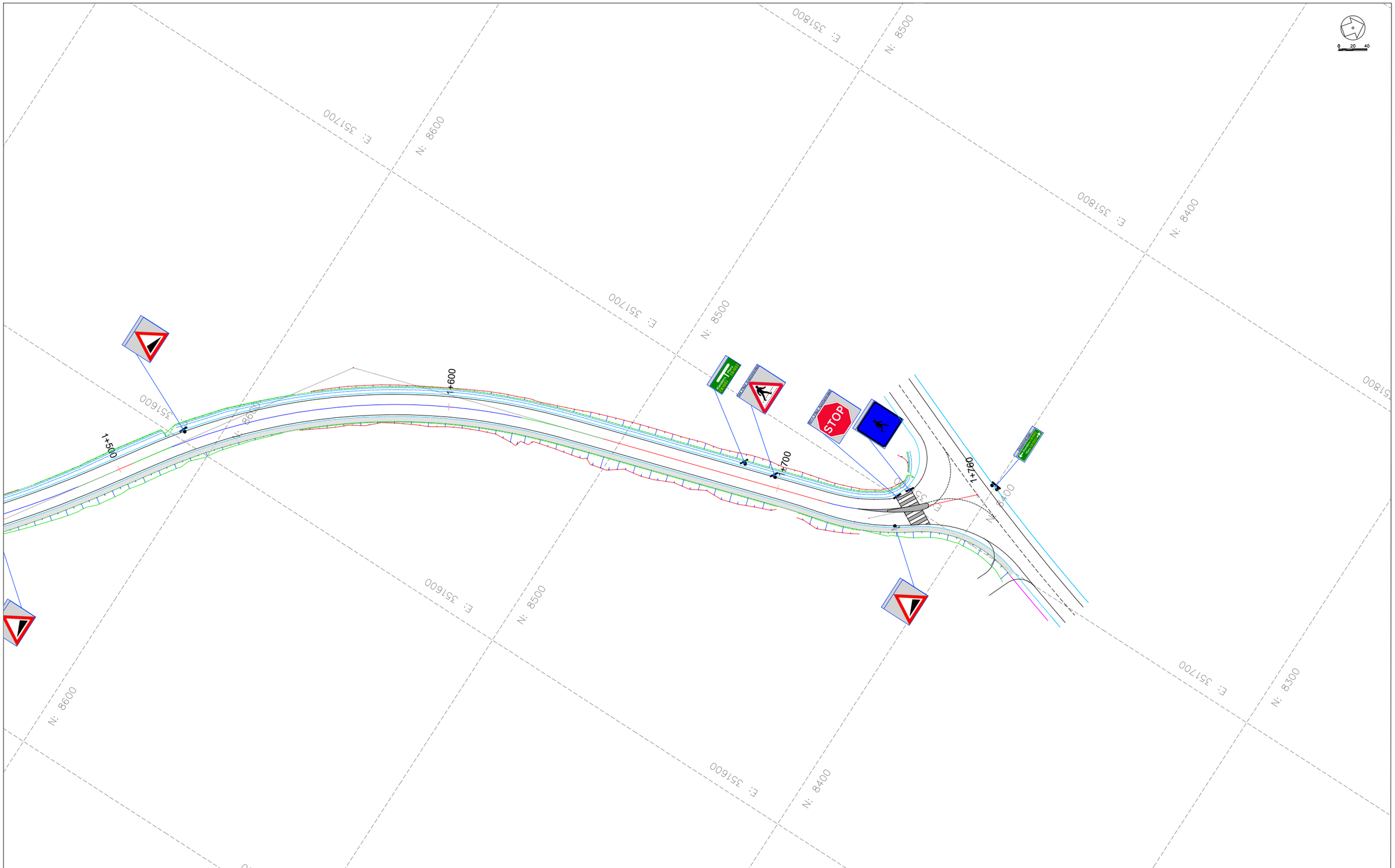

CLIENT:

KENYA NATIONAL HIGHWAY AUTHORITY
Barabara Plaza,
Off Airport South Road,
P. O. Box, 49712 - 00100,
NAIROBI.

KENYA URBAN ROADS AUTHORITY
Barabara Plaza,
Off Airport South Road,
P. O. Box, 49712 - 00100,
NAIROBI.

FINANCIER:

THE WORLD BANK

PROJECT:

HORN OF AFRICA GATEWAY DEVELOPMENT PROJECT (HOAGDP): -

Consultancy Services for the Design and Works Supervision for the Proposed Extension of Meru Bypass.

CONTRACT NO:

KeNHA/RD/CS/D/4205/2024

CONSULTANT:

egis

One Padmore Place 6th Floor,
George Padmore Road,
P. O. Box, 76672 - 00508,
NAIROBI.

DESIGN DETAILS

Action	Name	Date
Designed By:	S.A	AUG 2025
Drawn By:	J.M	AUG 2025
Checked By:	L.R	AUG 2025
Approved By:	S.O	AUG 2025

DRAWING REVISIONS

No.	Revision Details	Reviewed	Initials	Date	Approved
		By			
		Checked			
		By			
		Checked			
		By			
		Checked			
		By			
		Checked			
		By			
		Checked			

MERU BYPASS-RUNOGONE-KAITHE

ROAD SIGNS LAYOUT

ROAD: RUNOGONE-KAITHE

CH 1+700 - CH 1+757

DRAWING SCALE:

H: 1:500
V: 1:50

DRAWING NO:

RSL-RUN/KAI-007

Doc. Type | Nature of Work | Number

MERU BY-PASS ROADS

3. HOSPITAL ROADS

ROAD SIGNS LAYOUT

3.1. HOSPITAL ROAD - KIRAMBURINE JCT

ROAD SIGNS LAYOUT

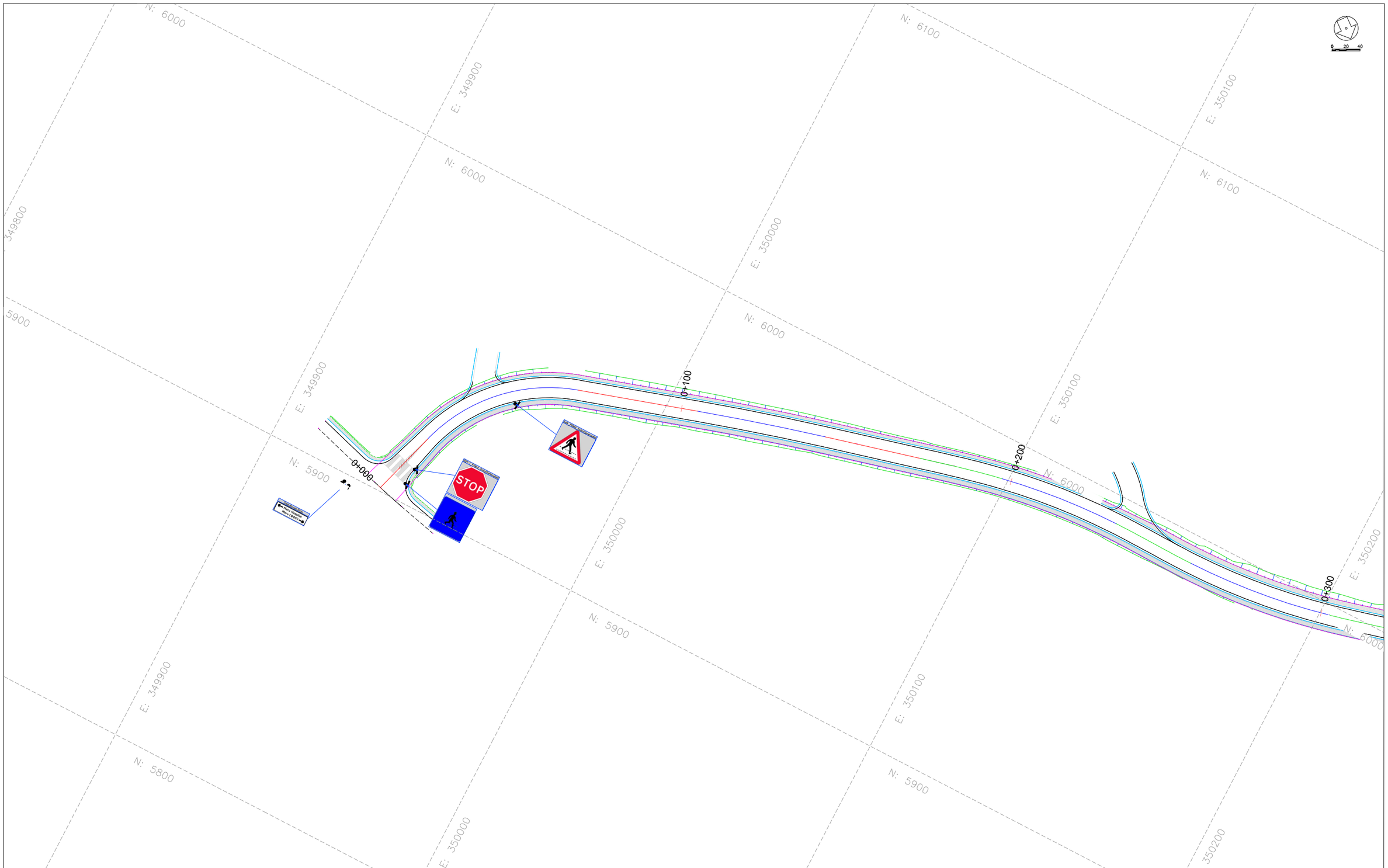

CLIENT:

KENYA NATIONAL HIGHWAY AUTHORITY
Barabara Plaza,
Off Airport South Road,
P. O. Box, 49712 - 00100,
NAIROBI.

KENYA URBAN ROADS AUTHORITY
Barabara Plaza,
Off Airport South Road,
P. O. Box, 49712 - 00100,
NAIROBI.

FINANCIER:

THE WORLD BANK

PROJECT:

HORN OF AFRICA GATEWAY DEVELOPMENT PROJECT (HOAGDP): -

Consultancy Services for the Design and Works Supervision for the Proposed Extension of Meru Bypass.

CONTRACT NO:

KeNHA/RD/CS/D/4205/2024

CONSULTANT:

egis

One Padmore Place 6th Floor,
George Padmore Road,
P. O. Box, 76672 - 00508,
NAIROBI.

DESIGN DETAILS

Action	Name	Date
Designed By:	S.A	AUG 2025
Drawn By:	J.M	AUG 2025
Checked By:	L.R	AUG 2025
Approved By:	S.O	AUG 2025

DRAWING REVISIONS

No.	Revision Details	Reviewed	Initials	Date	Approved
		By			
		Checked			
		By			
		Checked			
		By			
		Checked			
		By			
		Checked			
		By			
		Checked			

MERU BYPASS-HOSPITAL ROADS

ROAD SIGNS LAYOUT

ROAD: HOSPITAL ROAD -KIRAMBURINE JCT

CH 0+000 - CH 0+200

DRAWING SCALE:

H: 1:500
V: 1:50

DRAWING NO:

R S L - HOS/KIR - 0 0 1
Doc. Type | Nature of Work | Number

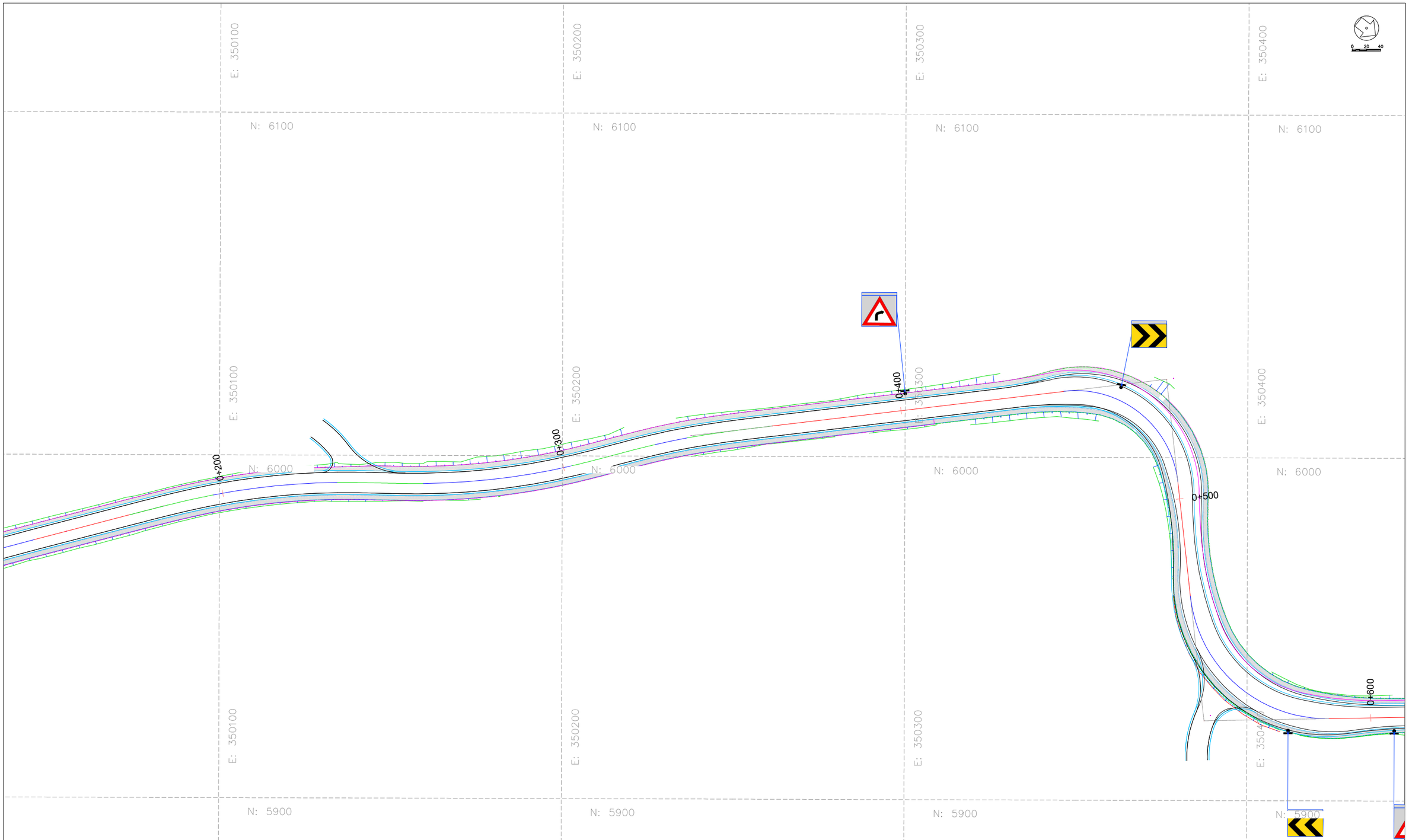

CLIENT:

KENYA NATIONAL HIGHWAY AUTHORITY
Barabara Plaza,
Off Airport South Road,
P. O. Box, 49712 - 00100,
NAIROBI.

KENYA URBAN ROADS AUTHORITY
Barabara Plaza,
Off Airport South Road,
P. O. Box, 49712 - 00100,
NAIROBI.

FINANCIER:

THE WORLD BANK

PROJECT:

HORN OF AFRICA GATEWAY DEVELOPMENT PROJECT (HOAGDP): -

Consultancy Services for the Design and Works Supervision for the Proposed Extension of Meru Bypass.

CONTRACT NO:

KeNHA/RD/CS/D/4205/2024

CONSULTANT:

egis

One Padmore Place 6th Floor,
George Padmore Road,
P. O. Box, 76672 - 00508,
NAIROBI.

DESIGN DETAILS

Action	Name	Date
Designed By:	S.A	AUG 2025
Drawn By:	J.M	AUG 2025
Checked By:	L.R	AUG 2025
Approved By:	S.O	AUG 2025

DRAWING REVISIONS

No.	Revision Details	Reviewed	Initials	Date	Approved
		By			
		Checked			
		By			
		Checked			
		By			
		Checked			
		By			
		Checked			
		By			
		Checked			

MERU BYPASS-HOSPITAL ROADS

ROAD SIGNS LAYOUT

ROAD: HOSPITAL ROAD -KIRAMBURINE JCT

CH 0+200 - CH 0+500

DRAWING SCALE:

H: 1:500
V: 1:50

DRAWING NO:

RSL-HOS/KIR-002

Doc. Type | Nature of Work | Number

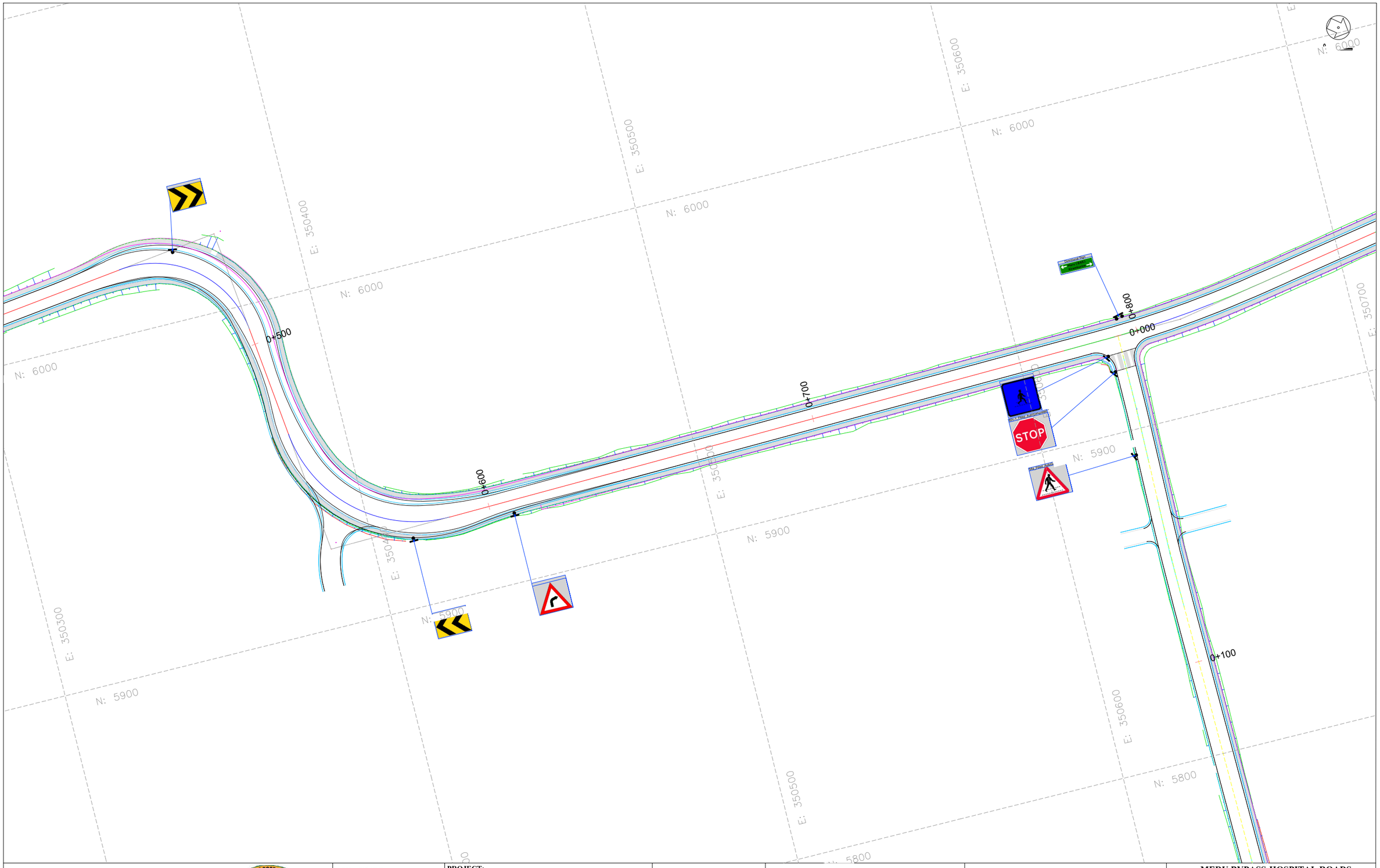

CLIENT:

KENYA NATIONAL HIGHWAY AUTHORITY
Barabara Plaza,
Off Airport South Road,
P. O. Box, 49712 - 00100,
NAIROBI.

KENYA URBAN ROADS AUTHORITY
Barabara Plaza,
Off Airport South Road,
P. O. Box, 49712 - 00100,
NAIROBI.

FINANCIER:

THE WORLD BANK

PROJECT:

HORN OF AFRICA GATEWAY DEVELOPMENT PROJECT (HOAGDP): -

Consultancy Services for the Design and Works Supervision for the Proposed Extension of Meru Bypass.

CONTRACT NO:

KeNHA/RD/CS/D/4205/2024

CONSULTANT:

egis

One Padmore Place 6th Floor,
George Padmore Road,
P. O. Box, 76672 - 00508,
NAIROBI.

DESIGN DETAILS

Action	Name	Date
Designed By:	S.A	AUG 2025
Drawn By:	J.M	AUG 2025
Checked By:	L.R	AUG 2025
Approved By:	S.O	AUG 2025

DRAWING REVISIONS

No.	Revision Details	Reviewed	Initials	Date	Approved
		By			
		Checked			
		By			
		Checked			
		By			
		Checked			
		By			
		Checked			
		By			
		Checked			

MERU BYPASS-HOSPITAL ROADS

ROAD SIGNS LAYOUT

ROAD: HOSPITAL ROAD -KIRAMBURINE JCT

CH 0+500 - CH 0+800

DRAWING SCALE:

H: 1:500
V: 1:50

DRAWING NO:

RSL - HOS/KIR - 003

Doc. Type | Nature of Work | Number

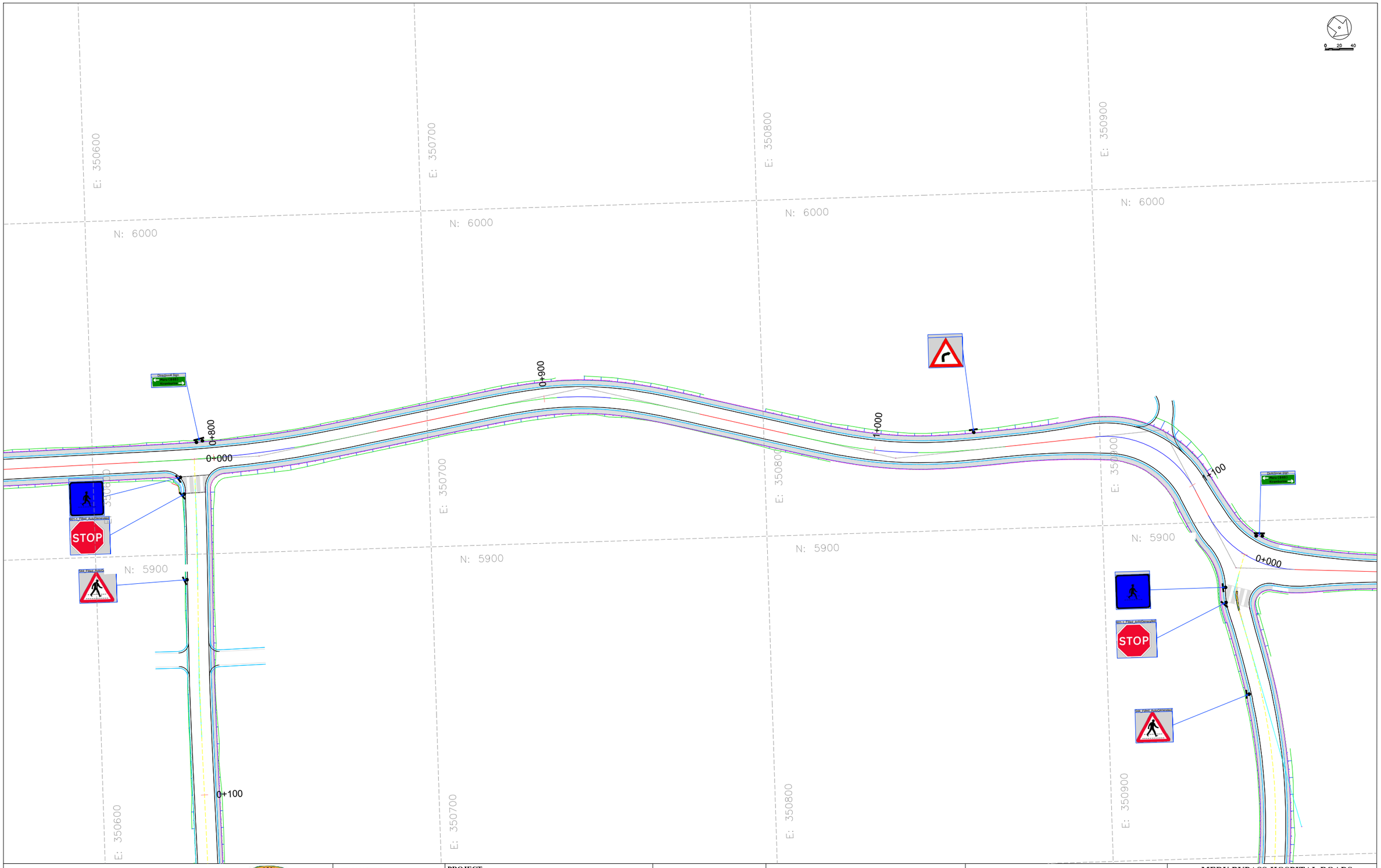

CLIENT:

KENYA NATIONAL HIGHWAY AUTHORITY
Barabara Plaza,
Off Airport South Road,
P. O. Box, 49712 - 00100,
NAIROBI.

KENYA URBAN ROADS AUTHORITY
Barabara Plaza,
Off Airport South Road,
P. O. Box, 49712 - 00100,
NAIROBI.

FINANCIER:

THE WORLD BANK

PROJECT:

HORN OF AFRICA GATEWAY DEVELOPMENT PROJECT (HOAGDP): -

Consultancy Services for the Design and Works Supervision for the Proposed Extension of Meru Bypass.

CONTRACT NO:

KeNHA/RD/CS/D/4205/2024

CONSULTANT:

egis

One Padmore Place 6th Floor,
George Padmore Road,
P. O. Box, 76672 - 00508,
NAIROBI.

DESIGN DETAILS

Action	Name	Date
Designed By:	S.A	AUG 2025
Drawn By:	J.M	AUG 2025
Checked By:	L.R	AUG 2025
Approved By:	S.O	AUG 2025

DRAWING REVISIONS

No.	Revision Details	Reviewed	Initials	Date	Approved
		By			
		Checked			
		By			
		Checked			
		By			
		Checked			
		By			
		Checked			
		By			
		Checked			

MERU BYPASS-HOSPITAL ROADS

ROAD SIGNS LAYOUT

ROAD: HOSPITAL ROAD -KIRAMBURINE JCT

CH 0+800 - CH 1+100

DRAWING SCALE:

H: 1:500
V: 1:50

DRAWING NO:

R S L - HOS/KIR - 0 0 4

Doc. Type | Nature of Work | Number

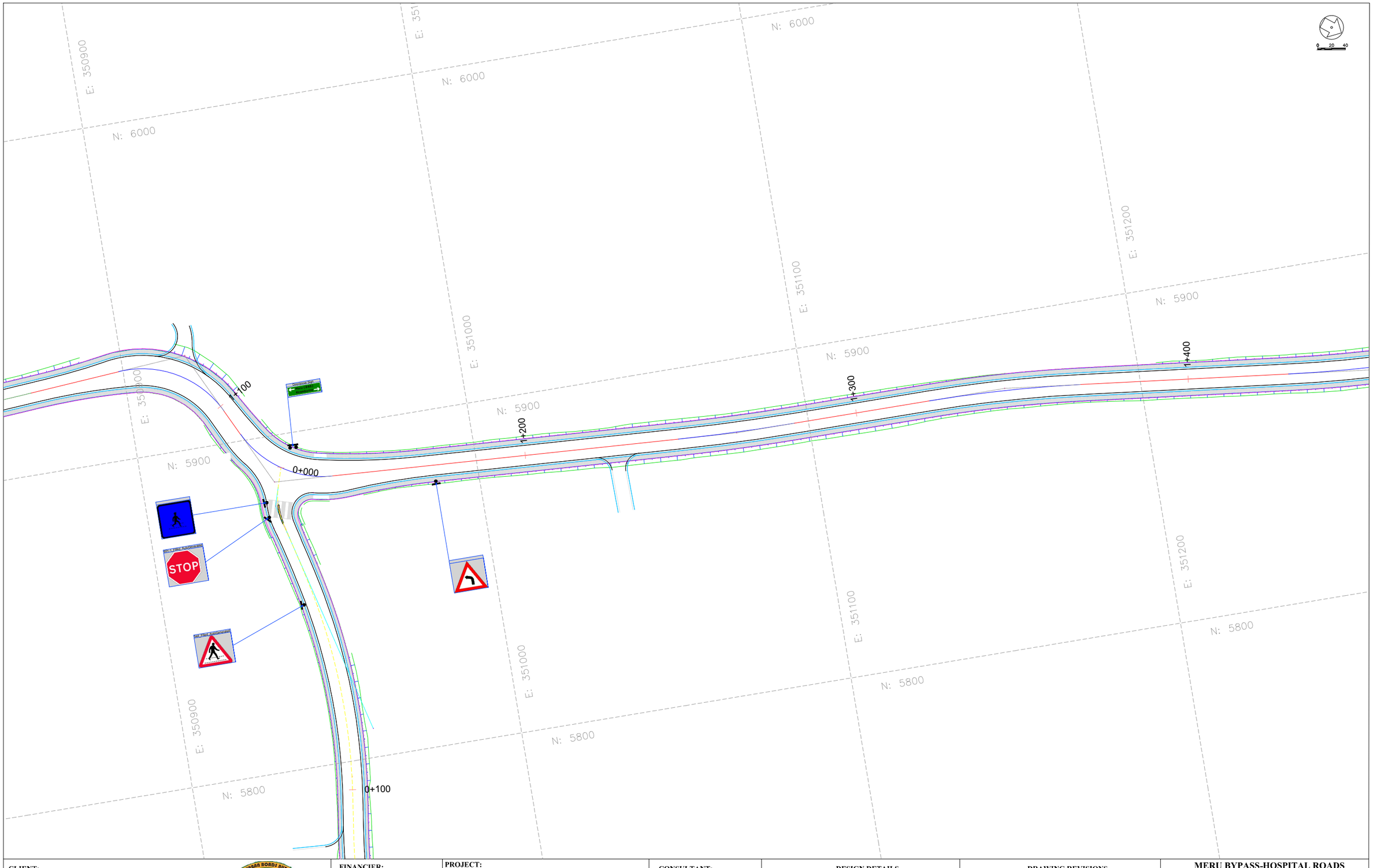

CLIENT:

KENYA NATIONAL HIGHWAY AUTHORITY
Barabara Plaza,
Off Airport South Road,
P. O. Box, 49712 - 00100,
NAIROBI.

KENYA URBAN ROADS AUTHORITY
Barabara Plaza,
Off Airport South Road,
P. O. Box, 49712 - 00100,
NAIROBI.

FINANCIER:

THE WORLD BANK

PROJECT:

HORN OF AFRICA GATEWAY DEVELOPMENT PROJECT (HOAGDP): -

Consultancy Services for the Design and Works Supervision for the Proposed Extension of Meru Bypass.

CONTRACT NO:

KeNHA/RD/CS/D/4205/2024

CONSULTANT:

egis

One Padmore Place 6th Floor,
George Padmore Road,
P. O. Box, 76672 - 00508,
NAIROBI.

DESIGN DETAILS

Action	Name	Date
Designed By:	S.A	AUG 2025
Drawn By:	J.M	AUG 2025
Checked By:	L.R	AUG 2025
Approved By:	S.O	AUG 2025

DRAWING REVISIONS

No.	Revision Details	Reviewed	Initials	Date	Approved
		By			
		Checked			
		By			
		Checked			
		By			
		Checked			
		By			
		Checked			
		By			
		Checked			

MERU BYPASS-HOSPITAL ROADS

ROAD SIGNS LAYOUT

ROAD: HOSPITAL ROAD -KIRAMBURINE JCT

CH 1+100 - CH 1+400

DRAWING SCALE:

H: 1:500
V: 1:50

DRAWING NO:

R S L - HOS/KIR - 0 0 5

Doc. Type | Nature of Work | Number

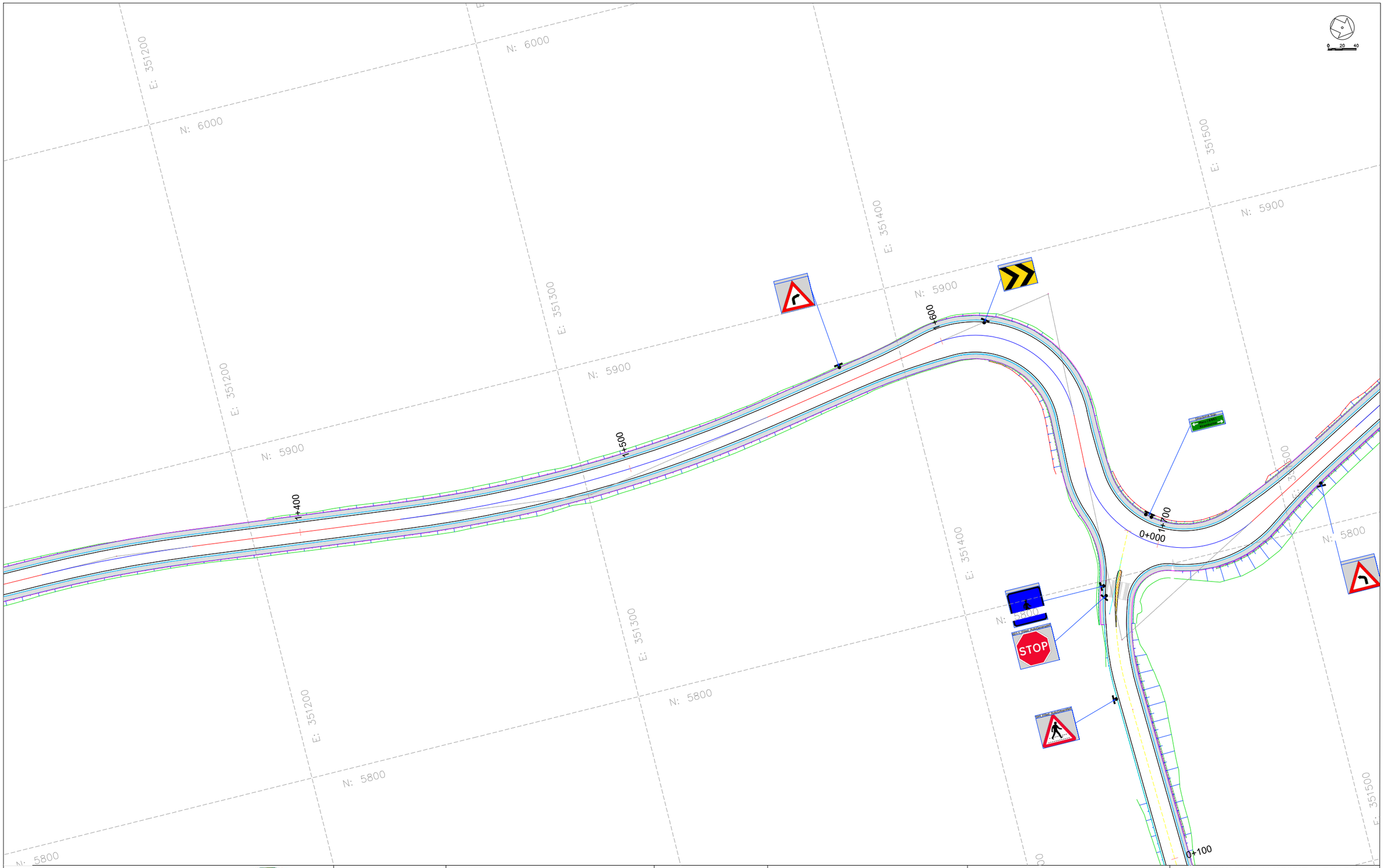

CLIENT:

KENYA NATIONAL HIGHWAY AUTHORITY
Barabara Plaza,
Off Airport South Road,
P. O. Box, 49712 - 00100,
NAIROBI.

KENYA URBAN ROADS AUTHORITY
Barabara Plaza,
Off Airport South Road,
P. O. Box, 49712 - 00100,
NAIROBI.

FINANCIER:

THE WORLD BANK

PROJECT:

HORN OF AFRICA GATEWAY DEVELOPMENT PROJECT (HOAGDP): -

Consultancy Services for the Design and Works Supervision for the Proposed Extension of Meru Bypass.

CONTRACT NO:

KeNHA/RD/CS/D/4205/2024

CONSULTANT:

egis

One Padmore Place 6th Floor,
George Padmore Road,
P. O. Box, 76672 - 00508,
NAIROBI.

DESIGN DETAILS

Action	Name	Date
Designed By:	S.A	AUG 2025
Drawn By:	J.M	AUG 2025
Checked By:	L.R	AUG 2025
Approved By:	S.O	AUG 2025

DRAWING REVISIONS

No.	Revision Details	Reviewed	Initials	Date	Approved
		By			
		Checked			
		By			
		Checked			
		By			
		Checked			
		By			
		Checked			
		By			
		Checked			

MERU BYPASS-HOSPITAL ROADS

ROAD SIGNS LAYOUT

ROAD: HOSPITAL ROAD -KIRAMBURINE JCT

CH 1+400 - CH 1+700

DRAWING SCALE:

H: 1:500
V: 1:50

DRAWING NO:

R S L - HOS/KIR - 0 0 6

Doc. Type | Nature of Work | Number

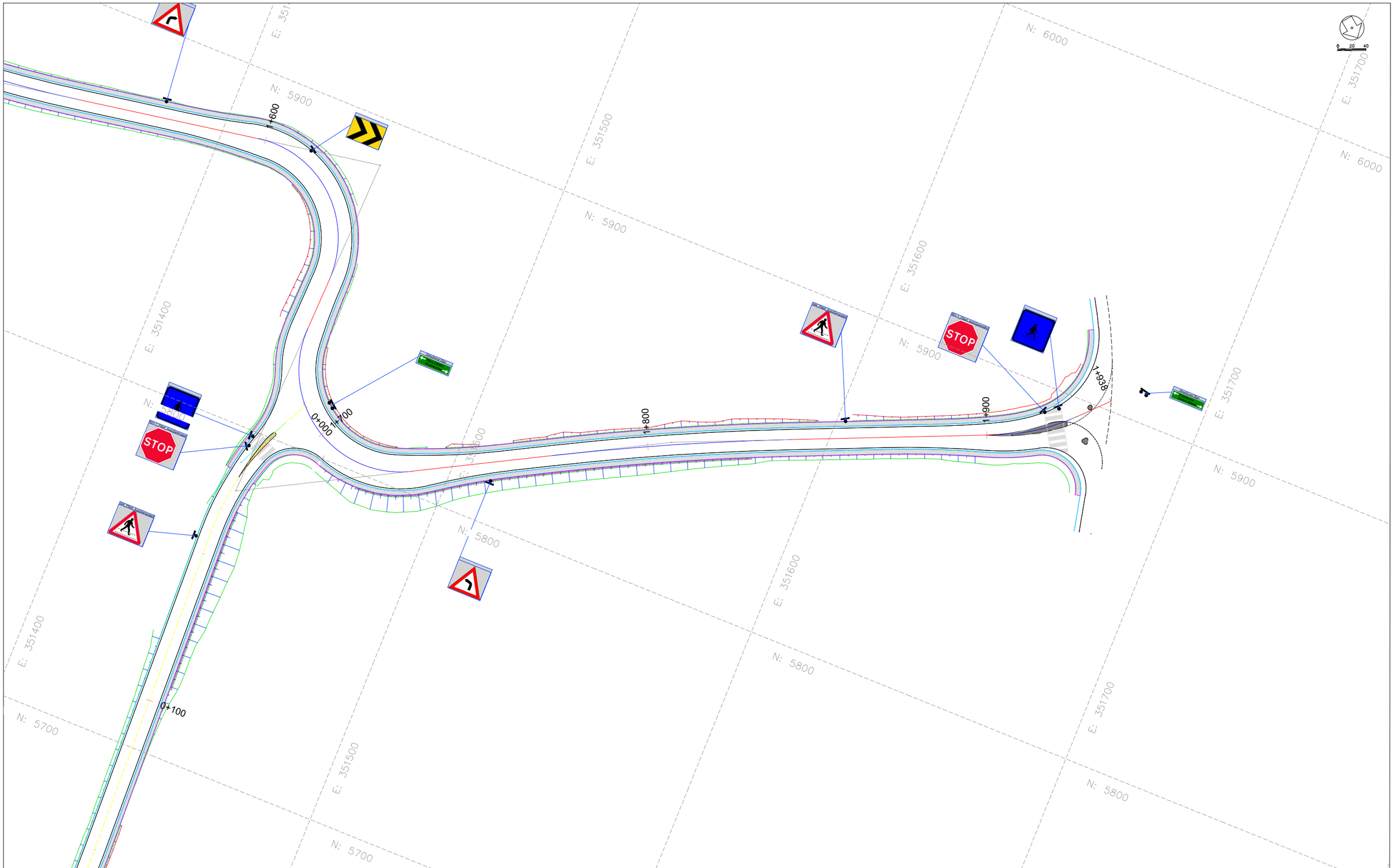

CLIENT:

KENYA NATIONAL HIGHWAY AUTHORITY
Barabara Plaza,
Off Airport South Road,
P. O. Box, 49712 - 00100,
NAIROBI.

KENYA URBAN ROADS AUTHORITY
Barabara Plaza,
Off Airport South Road,
P. O. Box, 49712 - 00100,
NAIROBI.

FINANCIER:

THE WORLD BANK

PROJECT:

HORN OF AFRICA GATEWAY DEVELOPMENT PROJECT (HOAGDP): -

Consultancy Services for the Design and Works Supervision for the Proposed Extension of Meru Bypass.

CONTRACT NO:

KeNHA/RD/CS/D/4205/2024

CONSULTANT:

egis

One Padmore Place 6th Floor,
George Padmore Road,
P. O. Box, 76672 - 00508,
NAIROBI.

DESIGN DETAILS

Action	Name	Date
Designed By:	S.A	AUG 2025
Drawn By:	J.M	AUG 2025
Checked By:	L.R	AUG 2025
Approved By:	S.O	AUG 2025

DRAWING REVISIONS

No.	Revision Details	Reviewed	Initials	Date	Approved
		By			
		Checked			
		By			
		Checked			
		By			
		Checked			
		By			
		Checked			
		By			
		Checked			

MERU BYPASS-HOSPITAL ROADS

ROAD SIGNS LAYOUT

ROAD: HOSPITAL ROAD -KIRAMBURINE JCT

CH 1+700 - CH 1+958

DRAWING SCALE:

H: 1:500
V: 1:50

DRAWING NO:

R S L - HOS/KIR - 0 0 7

Doc. Type | Nature of Work | Number

3.2. LINK 1 – MERU BUS TERMINUS

ROAD SIGNS LAYOUT

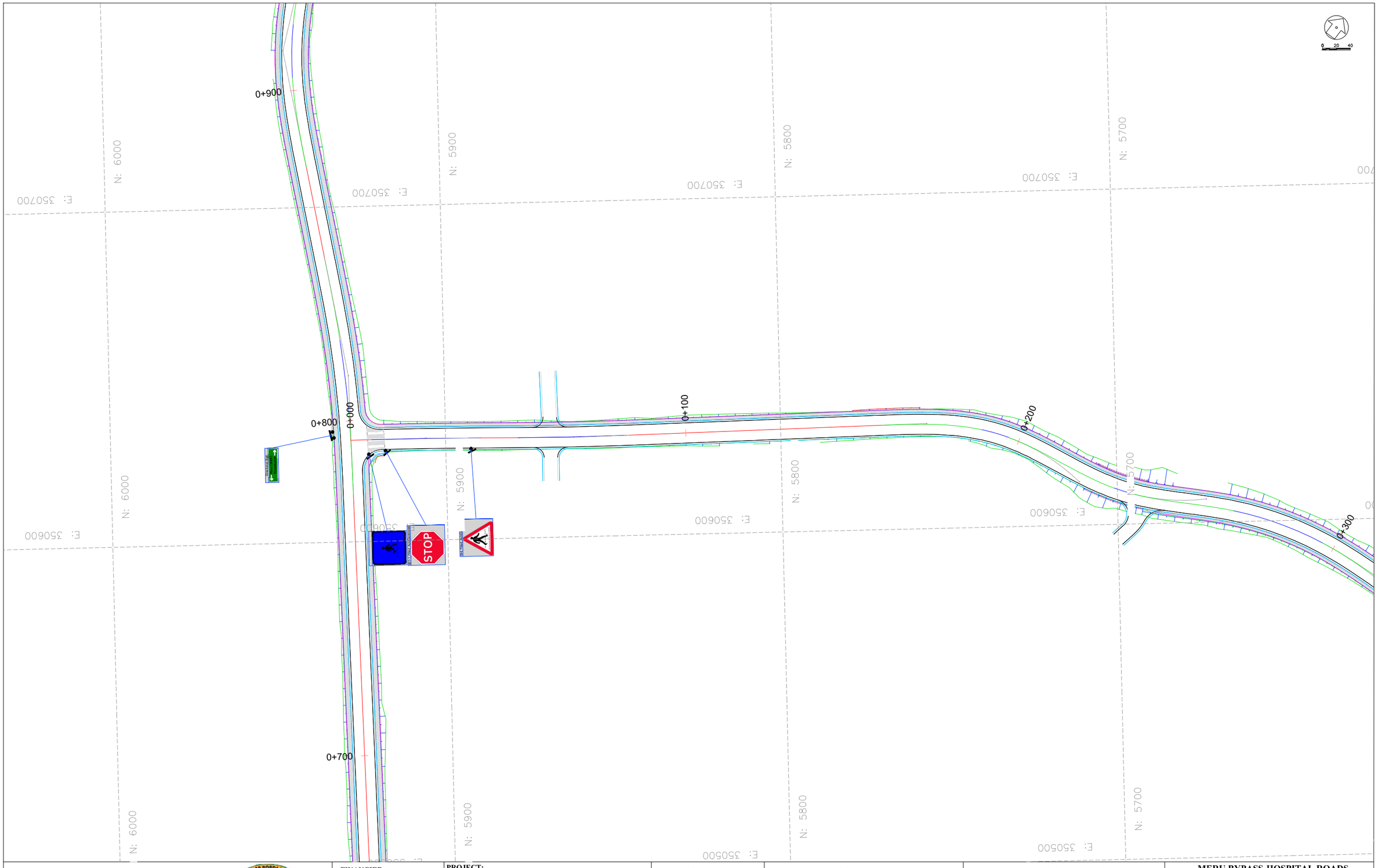

CLIENT:

KENYA NATIONAL HIGHWAY AUTHORITY
Barabara Plaza,
Off Airport South Road,
P. O. Box, 49712 - 00100,
NAIROBI.

KENYA URBAN ROADS AUTHORITY
Barabara Plaza,
Off Airport South Road,
P. O. Box, 49712 - 00100,
NAIROBI.

FINANCIER:

THE WORLD BANK

PROJECT:

HORN OF AFRICA GATEWAY DEVELOPMENT PROJECT (HOAGDP): -

Consultancy Services for the Design and Works Supervision for the Proposed Extension of Meru Bypass.

CONTRACT NO:

KeNHA/RD/CS/D/4205/2024

CONSULTANT:

egis

One Padmore Place 6th Floor,
George Padmore Road,
P. O. Box, 76672 - 00508,
NAIROBI.

DESIGN DETAILS

Action	Name	Date
Designed By:	S.A	AUG 2025
Drawn By:	J.M	AUG 2025
Checked By:	L.R	AUG 2025
Approved By:	S.O	AUG 2025

DRAWING REVISIONS

No.	Revision Details	Reviewed	Initials	Date	Approved
		By			
		Checked			
		By			
		Checked			
		By			
		Checked			
		By			
		Checked			
		By			
		Checked			

MERU BYPASS-HOSPITAL ROADS

ROAD SIGNS LAYOUT

ROAD: LINK 1-MERU BUS TERMINUS

CH 0+000 - CH 0+200

DRAWING SCALE:

H: 1:500
V: 1:50

DRAWING NO:

RSL - MBT - 001
Doc. Type | Nature of Work | Number

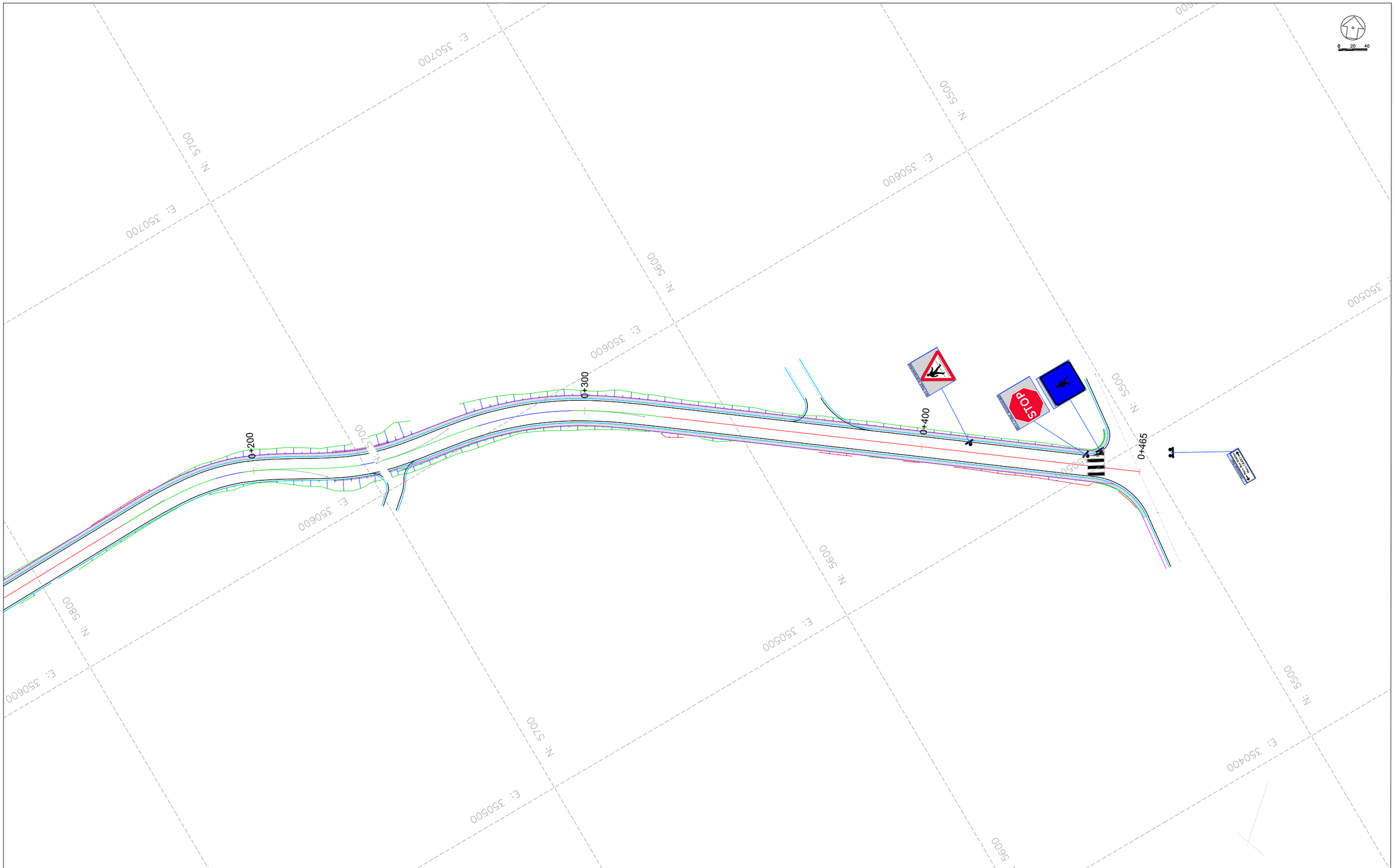

CLIENT:

KENYA NATIONAL HIGHWAY AUTHORITY
Barabara Plaza,
Off Airport South Road,
P. O. Box, 49712 - 00100,
NAIROBI.

KENYA URBAN ROADS AUTHORITY
Barabara Plaza,
Off Airport South Road,
P. O. Box, 49712 - 00100,
NAIROBI.

FINANCIER:

THE WORLD BANK

PROJECT:

HORN OF AFRICA GATEWAY DEVELOPMENT PROJECT (HOAGDP): -

Consultancy Services for the Design and Works Supervision for the Proposed Extension of Meru Bypass.

CONTRACT NO:

KeNHA/RD/CS/D/4205/2024

CONSULTANT:

egis

One Padmore Place 6th Floor,
George Padmore Road,
P. O. Box, 76672 - 00508,
NAIROBI.

DESIGN DETAILS

Action	Name	Date
Designed By:	S.A	AUG 2025
Drawn By:	J.M	AUG 2025
Checked By:	L.R	AUG 2025
Approved By:	S.O	AUG 2025

DRAWING REVISIONS

No.	Revision Details	Reviewed	Initials	Date	Approved
		By			
		Checked			
		By			
		Checked			
		By			
		Checked			
		By			
		Checked			
		By			
		Checked			

MERU BYPASS-HOSPITAL ROADS

ROAD SIGNS LAYOUT

ROAD: LINK 1-MERU BUS TERMINUS

CH 0+200 - CH 0+464.5

DRAWING SCALE:

H: 1:500
V: 1:50

DRAWING NO:

RSL - MBT - 002

Doc. Type | Nature of Work | Number

3.3. LINK 2 - GAKOROMONE MARKET

ROAD SIGNS LAYOUT

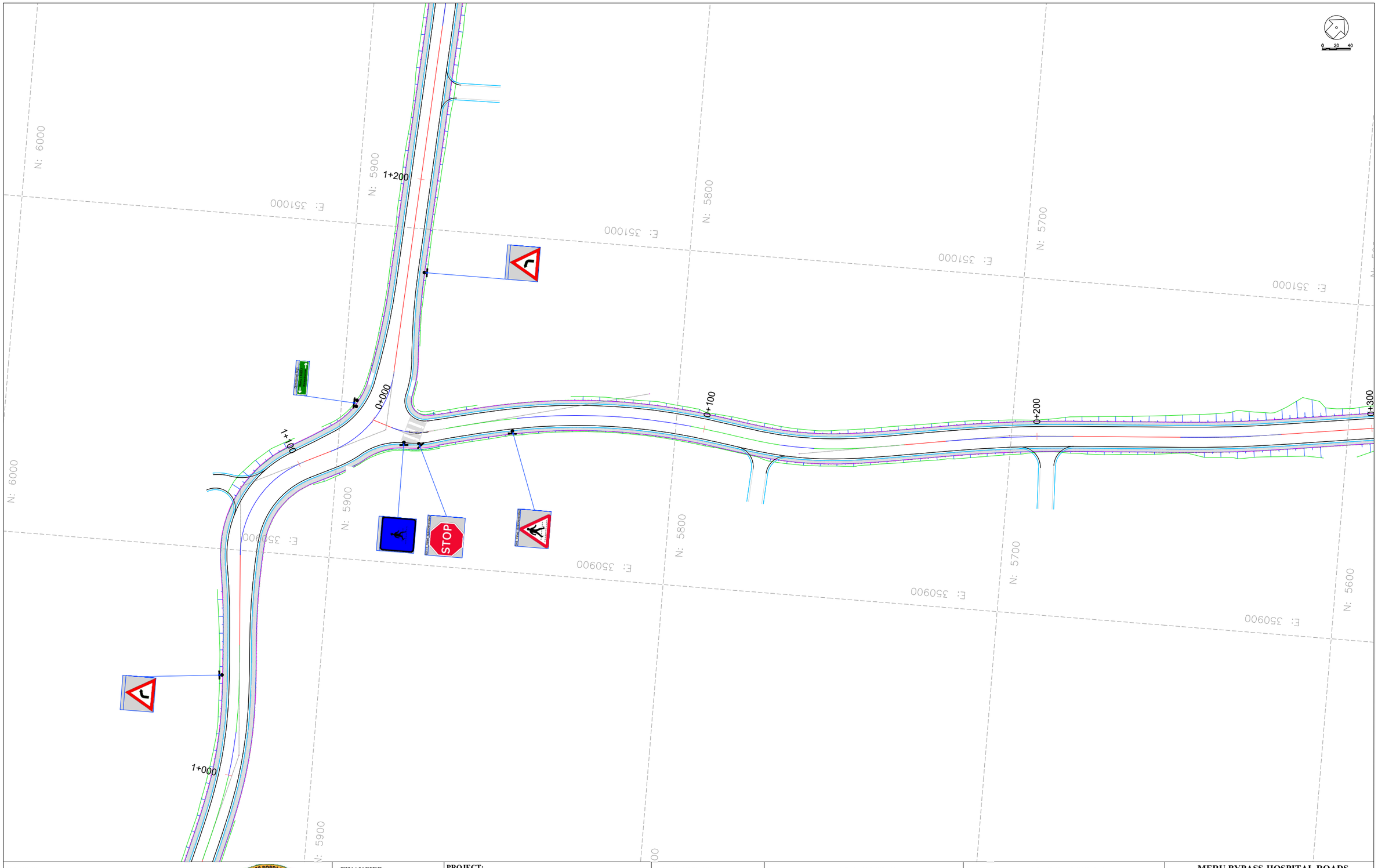

CLIENT:

KENYA NATIONAL HIGHWAY AUTHORITY
Barabara Plaza,
Off Airport South Road,
P. O. Box, 49712 - 00100,
NAIROBI.

KENYA URBAN ROADS AUTHORITY
Barabara Plaza,
Off Airport South Road,
P. O. Box, 49712 - 00100,
NAIROBI.

FINANCIER:

THE WORLD BANK

PROJECT:

HORN OF AFRICA GATEWAY DEVELOPMENT PROJECT (HOAGDP): -

Consultancy Services for the Design and Works Supervision for the Proposed Extension of Meru Bypass.

CONTRACT NO:

KeNHA/RD/CS/D/4205/2024

CONSULTANT:

egis

One Padmore Place 6th Floor,
George Padmore Road,
P. O. Box, 76672 - 00508,
NAIROBI.

DESIGN DETAILS

Action	Name	Date
Designed By:	S.A	AUG 2025
Drawn By:	J.M	AUG 2025
Checked By:	L.R	AUG 2025
Approved By:	S.O	AUG 2025

DRAWING REVISIONS

No.	Revision Details	Reviewed	Initials	Date	Approved
		By			
		Checked			
		By			
		Checked			
		By			
		Checked			
		By			
		Checked			
		By			
		Checked			

MERU BYPASS-HOSPITAL ROADS

ROAD SIGNS LAYOUT

ROAD: LINK 2-GAKOROMOME MARKET

CH 0+000 - CH 0+200

DRAWING SCALE:

H: 1:500
V: 1:50

DRAWING NO:

RSL - GAK/MT - 001

Doc. Type | Nature of Work | Number

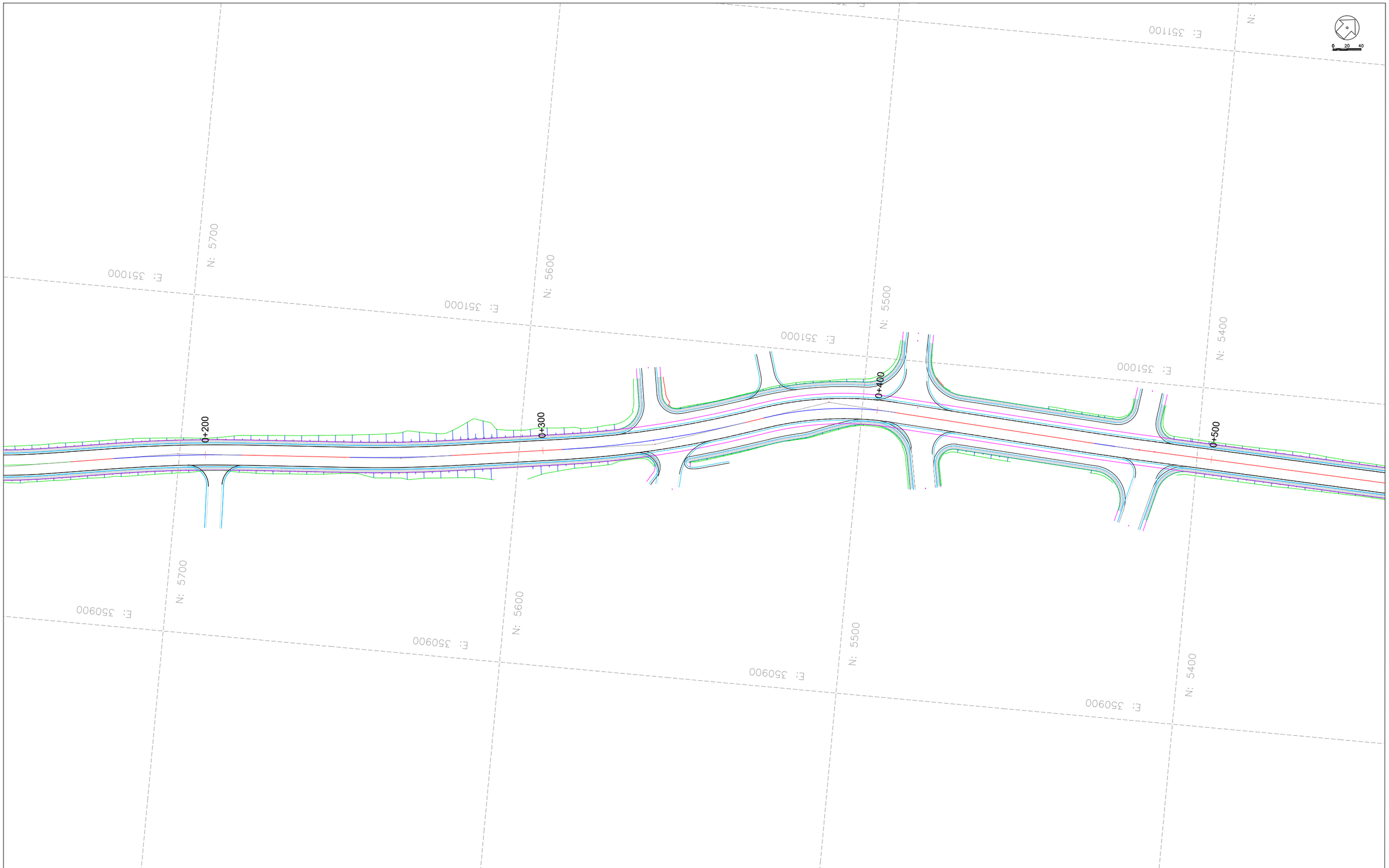

CLIENT:

KENYA NATIONAL HIGHWAY AUTHORITY
Barabara Plaza,
Off Airport South Road,
P. O. Box, 49712 - 00100,
NAIROBI.

KENYA URBAN ROADS AUTHORITY
Barabara Plaza,
Off Airport South Road,
P. O. Box, 49712 - 00100,
NAIROBI.

FINANCIER:

THE WORLD BANK

PROJECT:

HORN OF AFRICA GATEWAY DEVELOPMENT PROJECT (HOAGDP): -

Consultancy Services for the Design and Works Supervision for the Proposed Extension of Meru Bypass.

CONTRACT NO:

KeNHA/RD/CS/D/4205/2024

CONSULTANT:

One Padmore Place 6th Floor,
George Padmore Road,
P. O. Box, 76672 - 00508,
NAIROBI.

DESIGN DETAILS		
Action	**Name**	**Date**
Designed By:	S.A	AUG 2025
Drawn By:	J.M	AUG 2025
Checked By:	L.R	AUG 2025
Approved By:	S.O	AUG 2025

DRAWING REVISIONS					
No.	Revision Details	Reviewed	Initials	Date	Approved
		By			
		Checked			
		By			
		Checked			
		By			
		Checked			
		By			
		Checked			
		By			
		Checked			

MERU BYPASS-HOSPITAL ROADS

ROAD SIGNS LAYOUT

ROAD: LINK 2-GAKOROMOME MARKET

CH 0+200 - CH 0+500

DRAWING SCALE:

H: 1:500
V: 1:50

DRAWING NO:

RSL- GAK/MT -002

Doc. Type | Nature of Work | Number

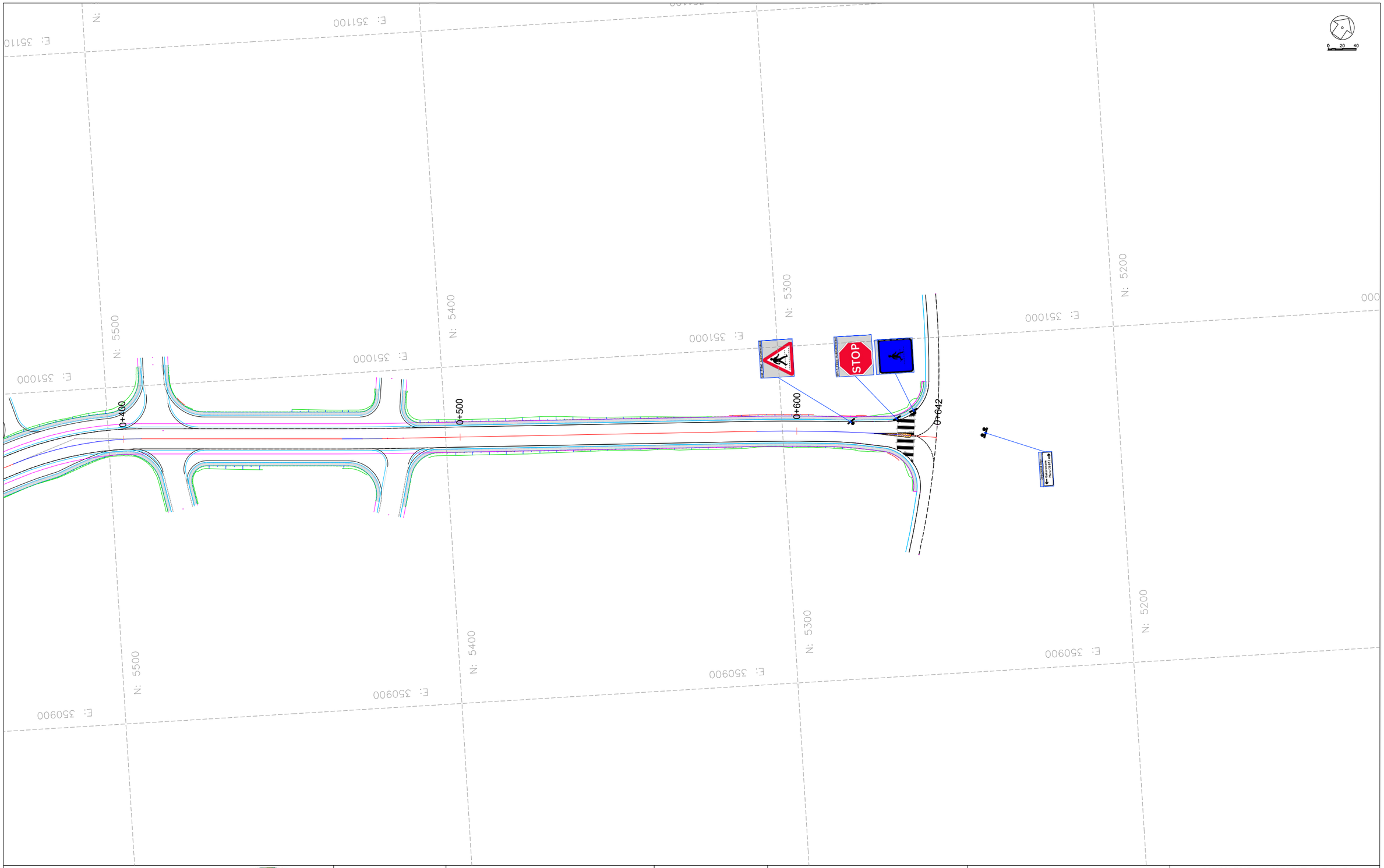

CLIENT:

KENYA NATIONAL HIGHWAY AUTHORITY
Barabara Plaza,
Off Airport South Road,
P. O. Box, 49712 - 00100,
NAIROBI.

KENYA URBAN ROADS AUTHORITY
Barabara Plaza,
Off Airport South Road,
P. O. Box, 49712 - 00100,
NAIROBI.

FINANCIER:

THE WORLD BANK

PROJECT:

HORN OF AFRICA GATEWAY DEVELOPMENT PROJECT (HOAGDP): -

Consultancy Services for the Design and Works Supervision for the Proposed Extension of Meru Bypass.

CONTRACT NO:

KeNHA/RD/CS/D/4205/2024

CONSULTANT:

One Padmore Place 6th Floor,
George Padmore Road,
P. O. Box, 76672 - 00508,
NAIROBI.

DESIGN DETAILS

Action	Name	Date
Designed By:	S.A	AUG 2025
Drawn By:	J.M	AUG 2025
Checked By:	L.R	AUG 2025
Approved By:	S.O	AUG 2025

DRAWING REVISIONS

No.	Revision Details	Reviewed	Initials	Date	Approved
		By			
		Checked			
		By			
		Checked			
		By			
		Checked			
		By			
		Checked			
		By			
		Checked			

MERU BYPASS-HOSPITAL ROADS

ROAD SIGNS LAYOUT

ROAD: LINK 2-GAKOROMOME MARKET

CH 0+500 - CH 0+645

DRAWING SCALE:

H: 1:500
V: 1:50

DRAWING NO:

RSL - GAK/MT - 003

Doc. Type | Nature of Work | Number

3.4. LINK 3 – MEWAS JCT

ROAD SIGNS LAYOUT

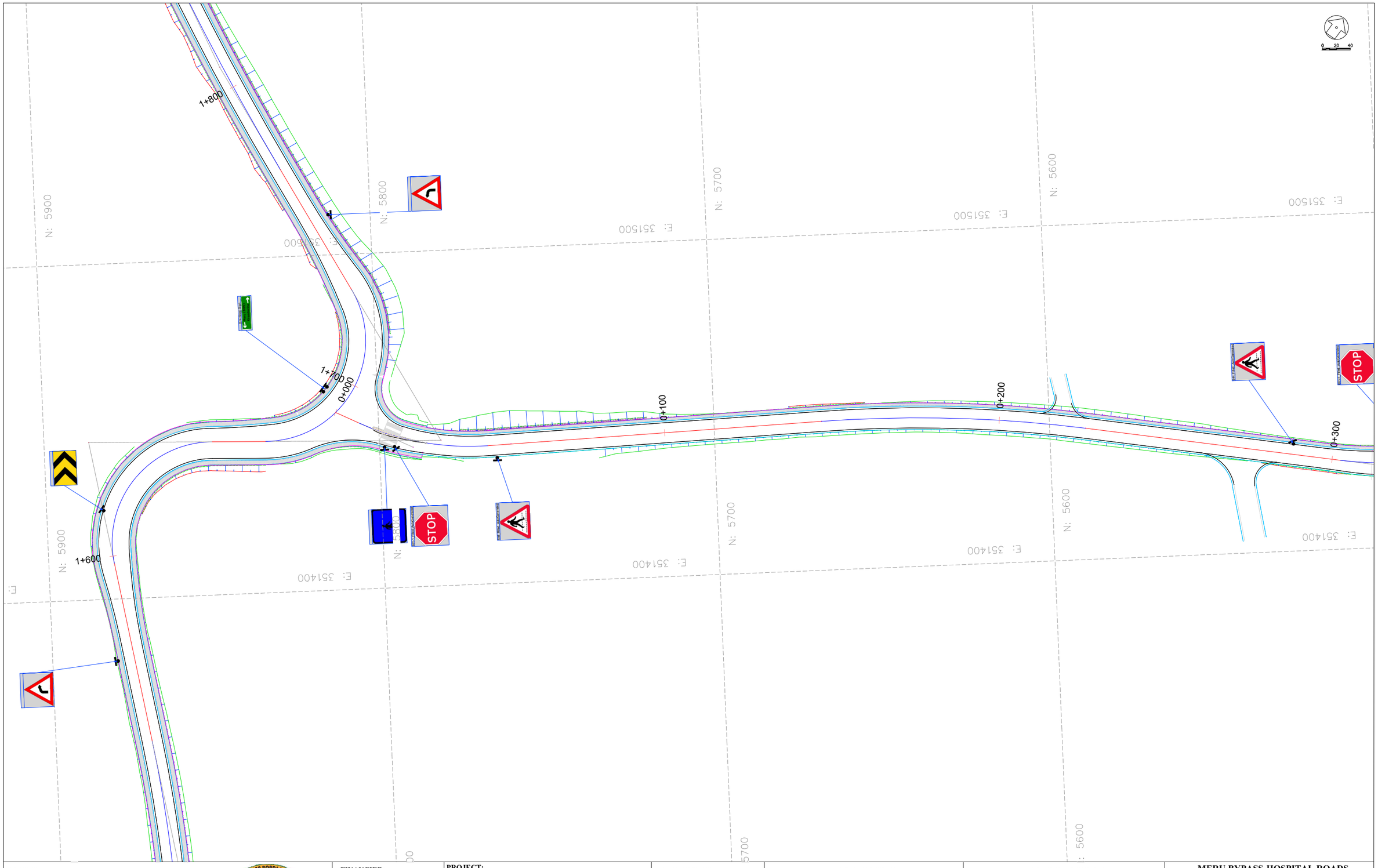

CLIENT:

KENYA NATIONAL HIGHWAY AUTHORITY
Barabara Plaza,
Off Airport South Road,
P. O. Box, 49712 - 00100,
NAIROBI.

KENYA URBAN ROADS AUTHORITY
Barabara Plaza,
Off Airport South Road,
P. O. Box, 49712 - 00100,
NAIROBI.

FINANCIER:

THE WORLD BANK

PROJECT:

HORN OF AFRICA GATEWAY DEVELOPMENT PROJECT (HOAGDP): -

Consultancy Services for the Design and Works Supervision for the Proposed Extension of Meru Bypass.

CONTRACT NO:

KeNHA/RD/CS/D/4205/2024

CONSULTANT:

egis

One Padmore Place 6th Floor,
George Padmore Road,
P. O. Box, 76672 - 00508,
NAIROBI.

DESIGN DETAILS

Action	Name	Date
Designed By:	S.A	AUG 2025
Drawn By:	J.M	AUG 2025
Checked By:	L.R	AUG 2025
Approved By:	S.O	AUG 2025

DRAWING REVISIONS

No.	Revision Details	Reviewed	Initials	Date	Approved
		By			
		Checked			
		By			
		Checked			
		By			
		Checked			
		By			
		Checked			
		By			
		Checked			

MERU BYPASS-HOSPITAL ROADS

ROAD SIGNS LAYOUT

ROAD: LINK 3-MEWAS JCT

CH 0+000 - CH 0+200

DRAWING SCALE:

H: 1:500
V: 1:50

DRAWING NO:

RSL - MWS - 001
Doc. Type | Nature of Work | Number



CLIENT:

KENYA NATIONAL HIGHWAY AUTHORITY
Barabara Plaza,
Off Airport South Road,
P. O. Box, 49712 - 00100,
NAIROBI.

KENYA URBAN ROADS AUTHORITY
Barabara Plaza,
Off Airport South Road,
P. O. Box, 49712 - 00100,
NAIROBI.

FINANCIER:

THE WORLD BANK

PROJECT:

HORN OF AFRICA GATEWAY DEVELOPMENT PROJECT (HOAGDP): -

Consultancy Services for the Design and Works Supervision for the Proposed Extension of Meru Bypass.

CONTRACT NO:

KeNHA/RD/CS/D/4205/2024

CONSULTANT:

One Padmore Place 6th Floor,
George Padmore Road,
P. O. Box, 76672 - 00508,
NAIROBI.

DESIGN DETAILS

Action	Name	Date
Designed By:	S.A	AUG 2025
Drawn By:	J.M	AUG 2025
Checked By:	L.R	AUG 2025
Approved By:	S.O	AUG 2025

DRAWING REVISIONS

No.	Revision Details	Reviewed	Initials	Date	Approved
		By			
		Checked			
		By			
		Checked			
		By			
		Checked			
		By			
		Checked			
		By			
		Checked			

MERU BYPASS-HOSPITAL ROADS

ROAD SIGNS LAYOUT

ROAD: LINK 3-MEWAS JCT

CH 0+200 - CH 0+341.35

DRAWING SCALE:

H: 1:500
V: 1:50

DRAWING NO:

R S L - MWS - 0 0 2
Doc. Type | Nature of Work | Number

MERU BY-PASS ROADS

4.WESTERN BYPASS-MATE ROADS

ROAD SIGNS LAYOUT

4.1. WESTERN BYPASS-LINK ROAD

ROAD SIGNS LAYOUT

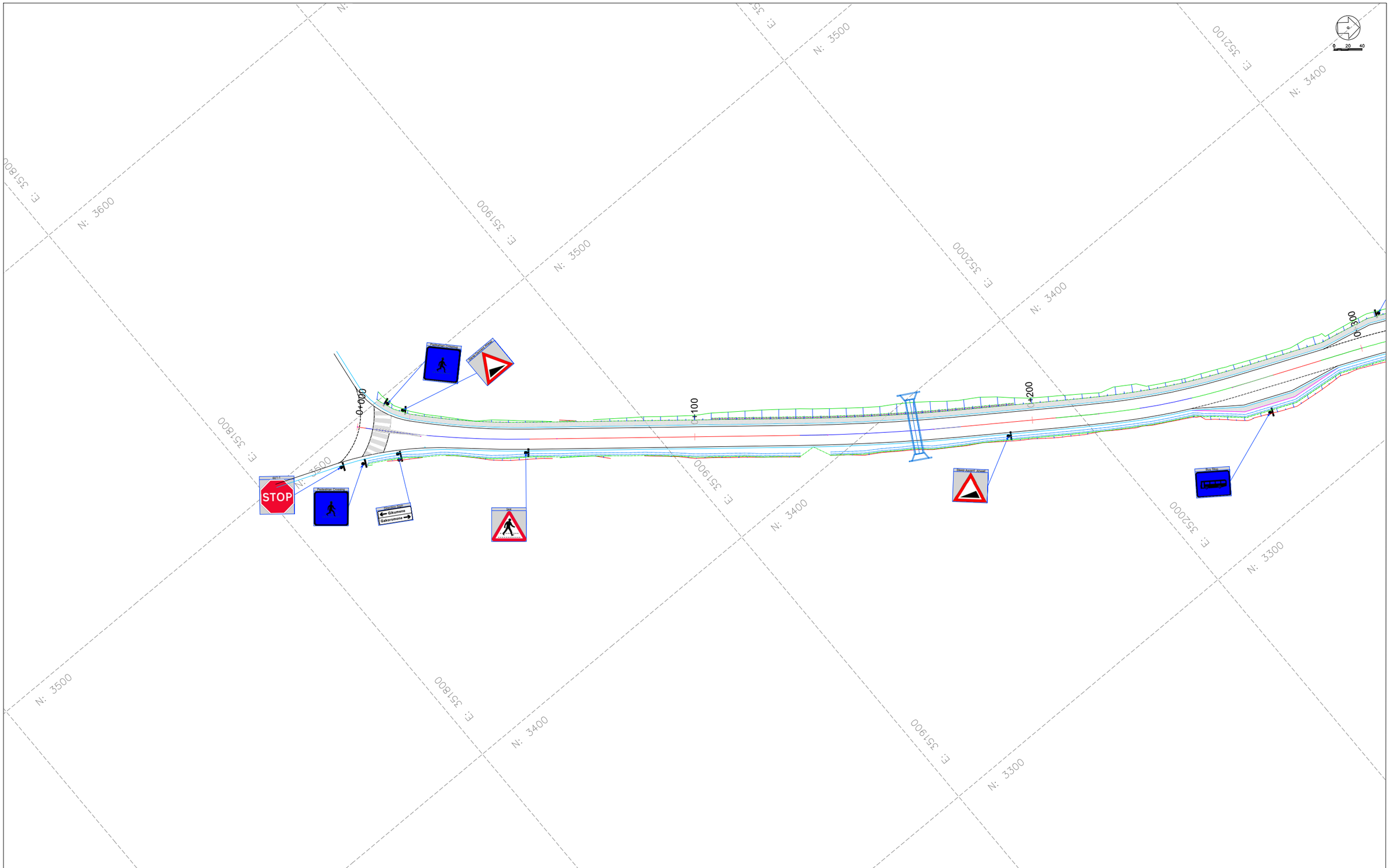

CLIENT:

KENYA NATIONAL HIGHWAY AUTHORITY
Barabara Plaza,
Off Airport South Road,
P. O. Box, 49712 - 00100,
NAIROBI.

KENYA URBAN ROADS AUTHORITY
Barabara Plaza,
Off Airport South Road,
P. O. Box, 49712 - 00100,
NAIROBI.

FINANCIER:

THE WORLD BANK

PROJECT:

HORN OF AFRICA GATEWAY DEVELOPMENT PROJECT (HOAGDP): -

Consultancy Services for the Design and Works Supervision for the Proposed Extension of Meru Bypass.

CONTRACT NO:

KeNHA/RD/CS/D/4205/2024

CONSULTANT:

egis

One Padmore Place 6th Floor,
George Padmore Road,
P. O. Box, 76672 - 00508,
NAIROBI.

DESIGN DETAILS

Action	Name	Date
Designed By:	S.A	AUG 2025
Drawn By:	J.M	AUG 2025
Checked By:	L.R	AUG 2025
Approved By:	S.O	AUG 2025

DRAWING REVISIONS

No.	Revision Details	Reviewed	Initials	Date	Approved
		By			
		Checked			
		By			
		Checked			
		By			
		Checked			
		By			
		Checked			
		By			
		Checked			

MERU BYPASS-WESTERN BYPASS ROADS

ROAD SIGNS LAYOUT

ROAD: WESTERN BYPASS-LINK ROAD

CH 0+000 - CH 0+200

DRAWING SCALE:

H: 1:500
V: 1:50

DRAWING NO:

RSL-WBL-001

Doc. Type | Nature of Work | Number

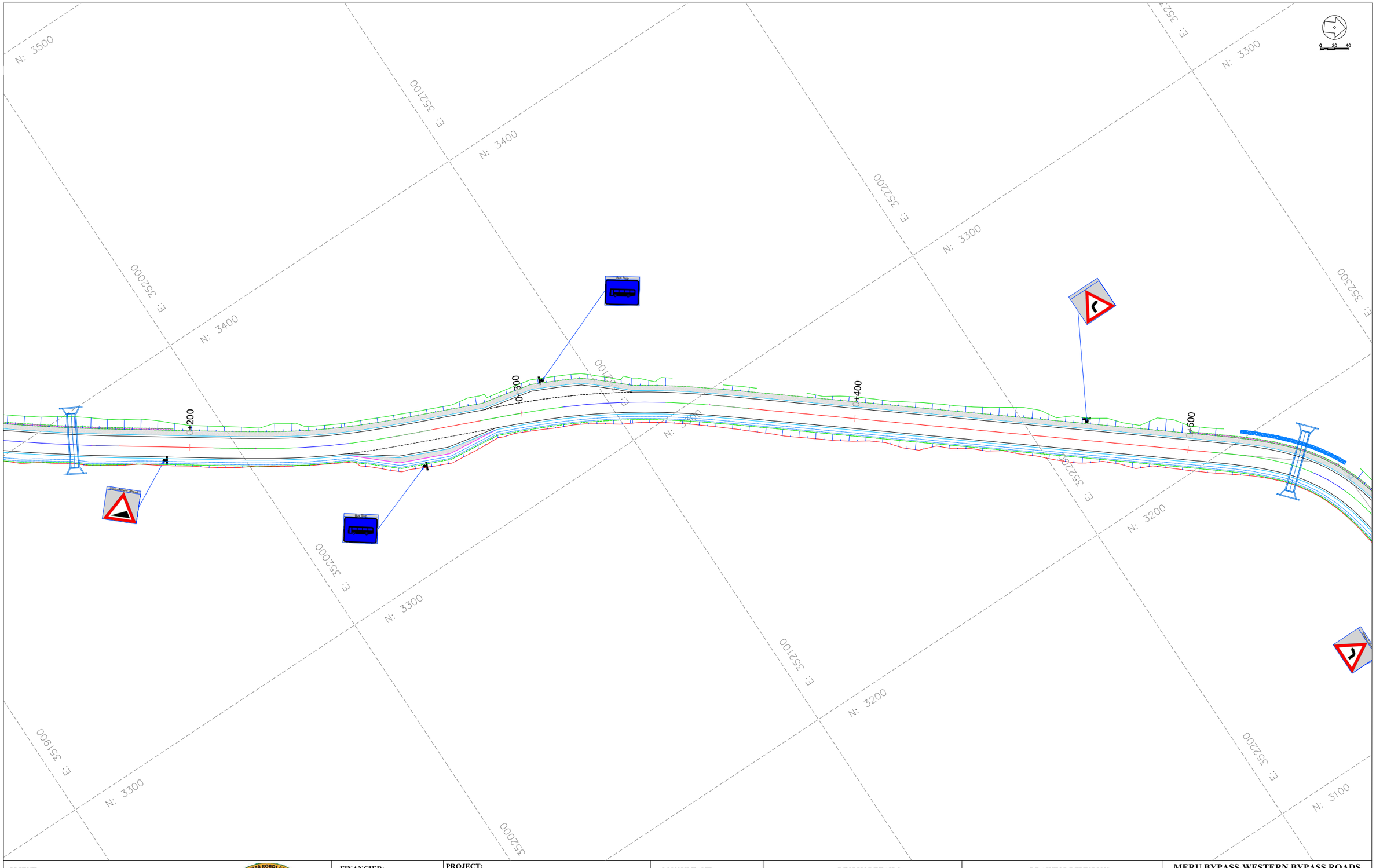

CLIENT:

KENYA NATIONAL HIGHWAY AUTHORITY
Barabara Plaza,
Off Airport South Road,
P. O. Box, 49712 - 00100,
NAIROBI.

KENYA URBAN ROADS AUTHORITY
Barabara Plaza,
Off Airport South Road,
P. O. Box, 49712 - 00100,
NAIROBI.

FINANCIER:

THE WORLD BANK

PROJECT:

HORN OF AFRICA GATEWAY DEVELOPMENT PROJECT (HOAGDP): -

Consultancy Services for the Design and Works Supervision for the Proposed Extension of Meru Bypass.

CONTRACT NO:

KeNHA/RD/CS/D/4205/2024

CONSULTANT:

One Padmore Place 6th Floor,
George Padmore Road,
P. O. Box, 76672 - 00508,
NAIROBI.

DESIGN DETAILS

Action	Name	Date
Designed By:	S.A	AUG 2025
Drawn By:	J.M	AUG 2025
Checked By:	L.R	AUG 2025
Approved By:	S.O	AUG 2025

DRAWING REVISIONS

No.	Revision Details	Reviewed	Initials	Date	Approved
		By			
		Checked			
		By			
		Checked			
		By			
		Checked			
		By			
		Checked			
		By			
		Checked			

MERU BYPASS-WESTERN BYPASS ROADS

ROAD SIGNS LAYOUT

ROAD: WESTERN BYPASS-LINK ROAD

CH 0+200 - CH 0+500

DRAWING SCALE:

H: 1:500
V: 1:50

DRAWING NO:

RSL-WBL-002

Doc. Type | Nature of Work | Number

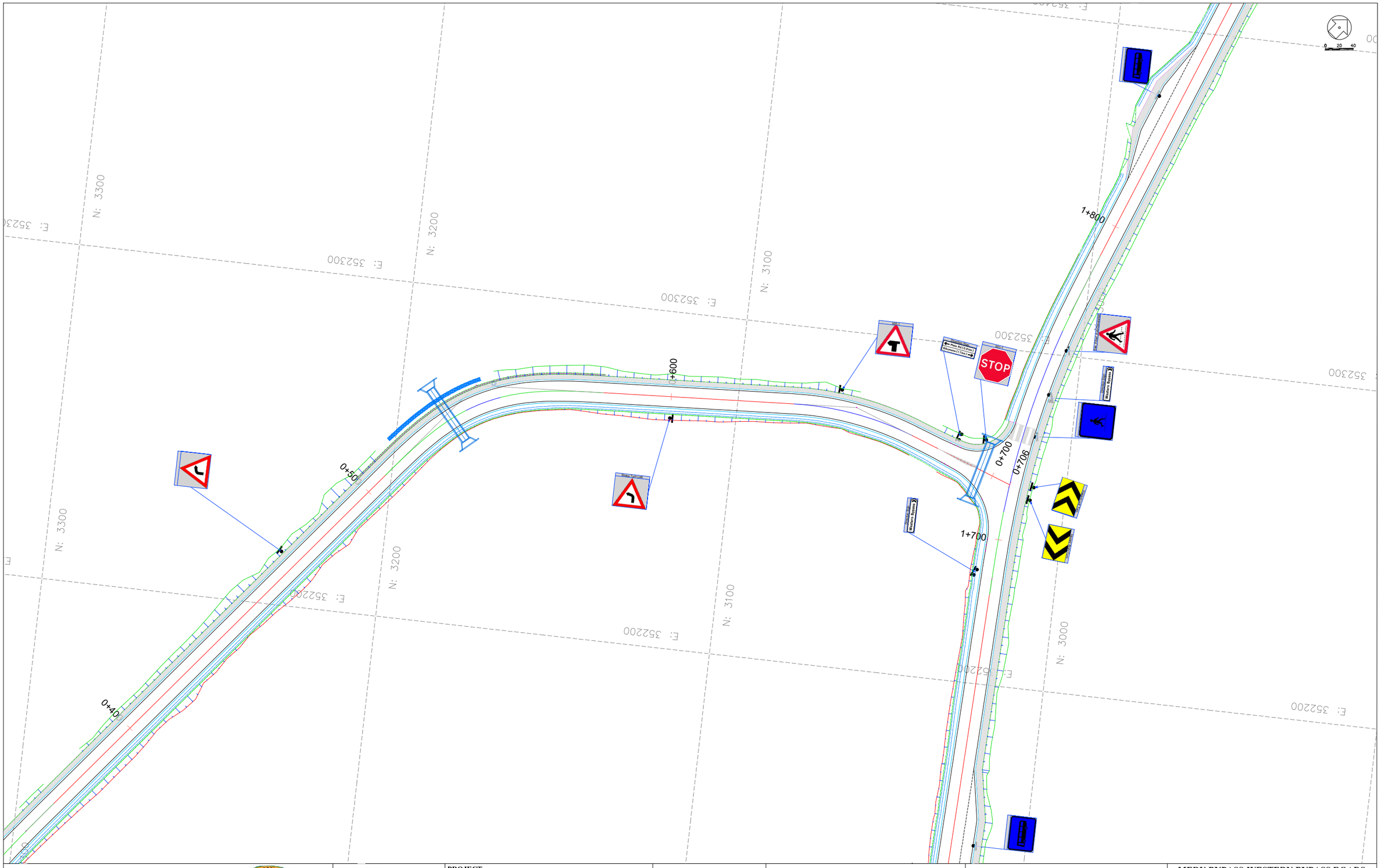

CLIENT:

KENYA NATIONAL HIGHWAY AUTHORITY
Barabara Plaza,
Off Airport South Road,
P. O. Box, 49712 - 00100,
NAIROBI.

KENYA URBAN ROADS AUTHORITY
Barabara Plaza,
Off Airport South Road,
P. O. Box, 49712 - 00100,
NAIROBI.

FINANCIER:

THE WORLD BANK

PROJECT:

HORN OF AFRICA GATEWAY DEVELOPMENT PROJECT (HOAGDP): -

Consultancy Services for the Design and Works Supervision for the Proposed Extension of Meru Bypass.

CONTRACT NO:

KeNHA/RD/CS/D/4205/2024

CONSULTANT:

egis

One Padmore Place 6th Floor,
George Padmore Road,
P. O. Box, 76672 - 00508,
NAIROBI.

DESIGN DETAILS

Action	Name	Date
Designed By:	S.A	AUG 2025
Drawn By:	J.M	AUG 2025
Checked By:	L.R	AUG 2025
Approved By:	S.O	AUG 2025

DRAWING REVISIONS

No.	Revision Details	Reviewed	Initials	Date	Approved
		By			
		Checked			
		By			
		Checked			
		By			
		Checked			
		By			
		Checked			
		By			
		Checked			

MERU BYPASS-WESTERN BYPASS ROADS

ROAD SIGNS LAYOUT

ROAD: WESTERN BYPASS-LINK ROAD

CH 0+500 - CH 0+709

DRAWING SCALE:

H: 1:500
V: 1:50

DRAWING NO:

RSL-WBL-003

Doc. Type | Nature of Work | Number

4.2. GIKUMENE JCT-MATE ROAD

ROAD SIGNS LAYOUT

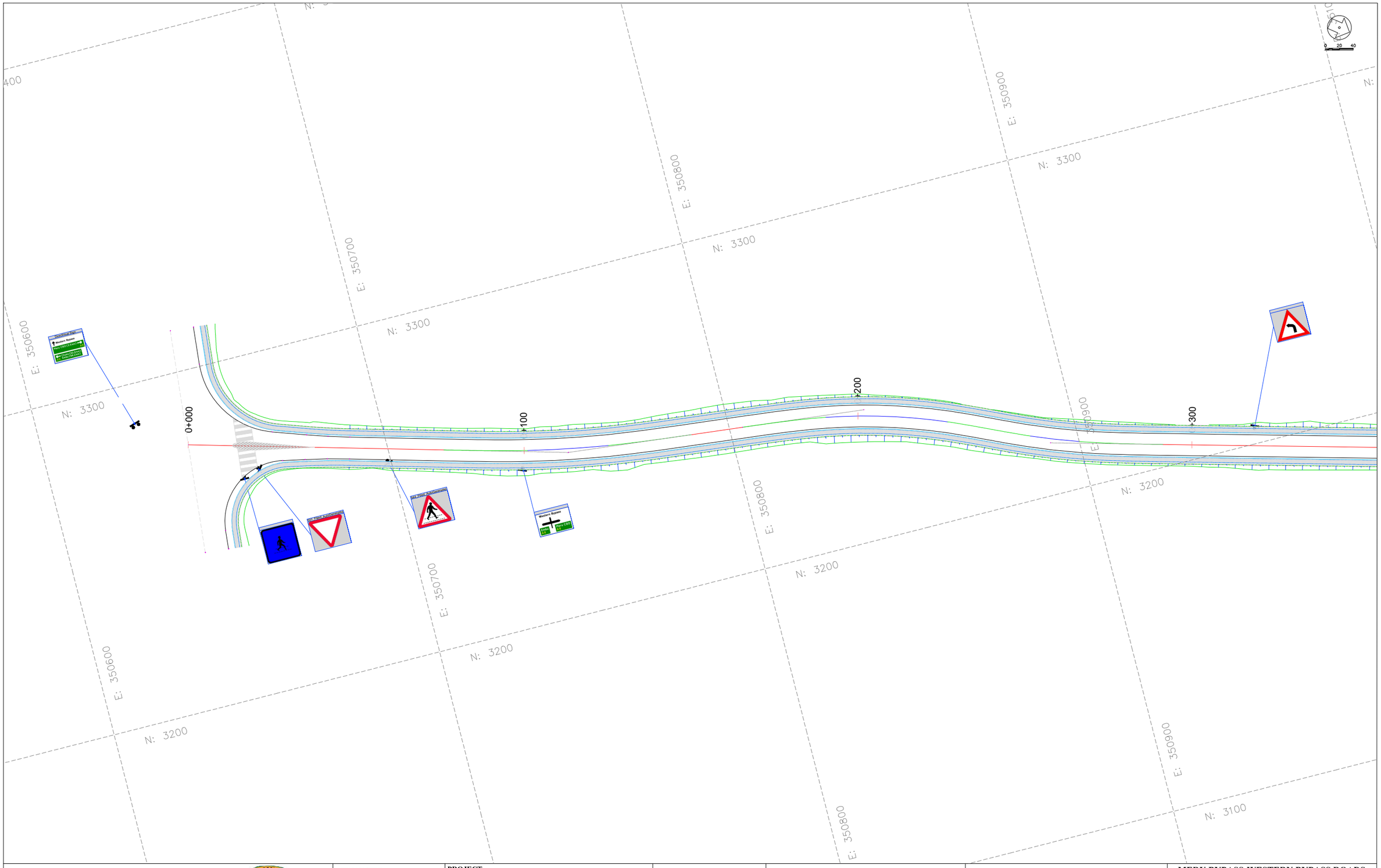

CLIENT:

KENYA NATIONAL HIGHWAY AUTHORITY
Barabara Plaza,
Off Airport South Road,
P. O. Box, 49712 - 00100,
NAIROBI.

KENYA URBAN ROADS AUTHORITY
Barabara Plaza,
Off Airport South Road,
P. O. Box, 49712 - 00100,
NAIROBI.

FINANCIER:

THE WORLD BANK

PROJECT:

HORN OF AFRICA GATEWAY DEVELOPMENT PROJECT (HOAGDP): -

Consultancy Services for the Design and Works Supervision for the Proposed Extension of Meru Bypass.

CONTRACT NO:

KeNHA/RD/CS/D/4205/2024

CONSULTANT:

One Padmore Place 6th Floor,
George Padmore Road,
P. O. Box, 76672 - 00508,
NAIROBI.

DESIGN DETAILS

Action	Name	Date
Designed By:	S.A	AUG 2025
Drawn By:	J.M	AUG 2025
Checked By:	L.R	AUG 2025
Approved By:	S.O	AUG 2025

DRAWING REVISIONS

No.	Revision Details	Reviewed	Initials	Date	Approved
		By			
		Checked			
		By			
		Checked			
		By			
		Checked			
		By			
		Checked			
		By			
		Checked			

MERU BYPASS-WESTERN BYPASS ROADS

ROAD SIGNS LAYOUT

ROAD: GIKUMENE JCT-MATE ROAD

CH 0+000 - CH 0+300

DRAWING SCALE:

H: 1:500
V: 1:50

DRAWING NO:

R S L - GKN/MAT - 0 0 1
Doc. Type | Nature of Work | Number

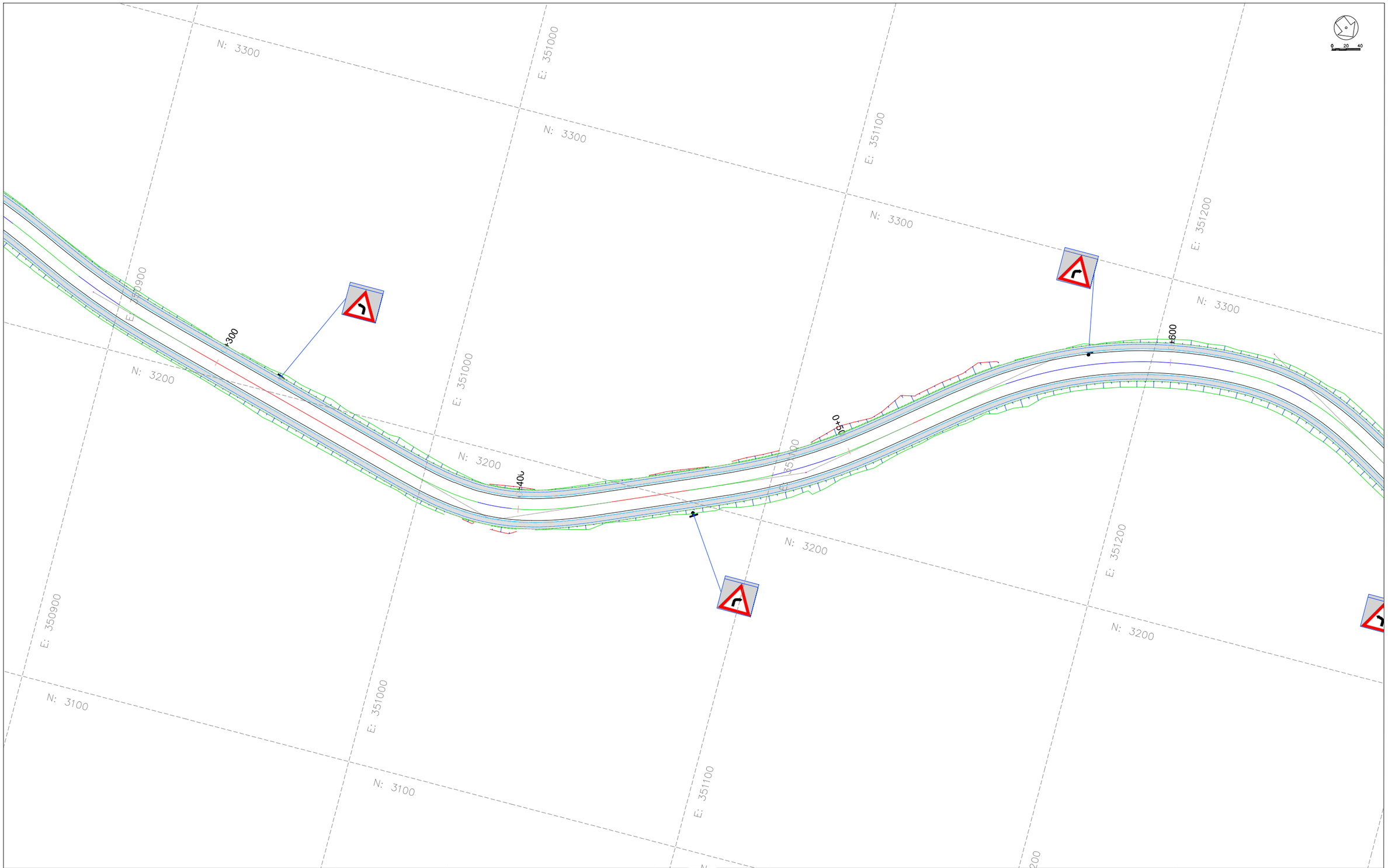

CLIENT:

KENYA NATIONAL HIGHWAY AUTHORITY
Barabara Plaza,
Off Airport South Road,
P. O. Box, 49712 - 00100,
NAIROBI.

KENYA URBAN ROADS AUTHORITY
Barabara Plaza,
Off Airport South Road,
P. O. Box, 49712 - 00100,
NAIROBI.

FINANCIER:

THE WORLD BANK

PROJECT:

HORN OF AFRICA GATEWAY DEVELOPMENT PROJECT (HOAGDP): -

Consultancy Services for the Design and Works Supervision for the Proposed Extension of Meru Bypass.

CONTRACT NO:

KeNHA/RD/CS/D/4205/2024

CONSULTANT:

egis

One Padmore Place 6th Floor,
George Padmore Road,
P. O. Box, 76672 - 00508,
NAIROBI.

DESIGN DETAILS

Action	Name	Date
Designed By:	S.A	AUG 2025
Drawn By:	J.M	AUG 2025
Checked By:	L.R	AUG 2025
Approved By:	S.O	AUG 2025

DRAWING REVISIONS

No.	Revision Details	Reviewed	Initials	Date	Approved
		By			
		Checked			
		By			
		Checked			
		By			
		Checked			
		By			
		Checked			
		By			
		Checked			

MERU BYPASS-WESTERN BYPASS ROADS

ROAD SIGNS LAYOUT

ROAD: GIKUMENE JCT-MATE ROAD

CH 0+300 - CH 0+600

DRAWING SCALE:

H: 1:500
V: 1:50

DRAWING NO:

RSL-GKN/MAT-002

Doc. Type | Nature of Work | Number

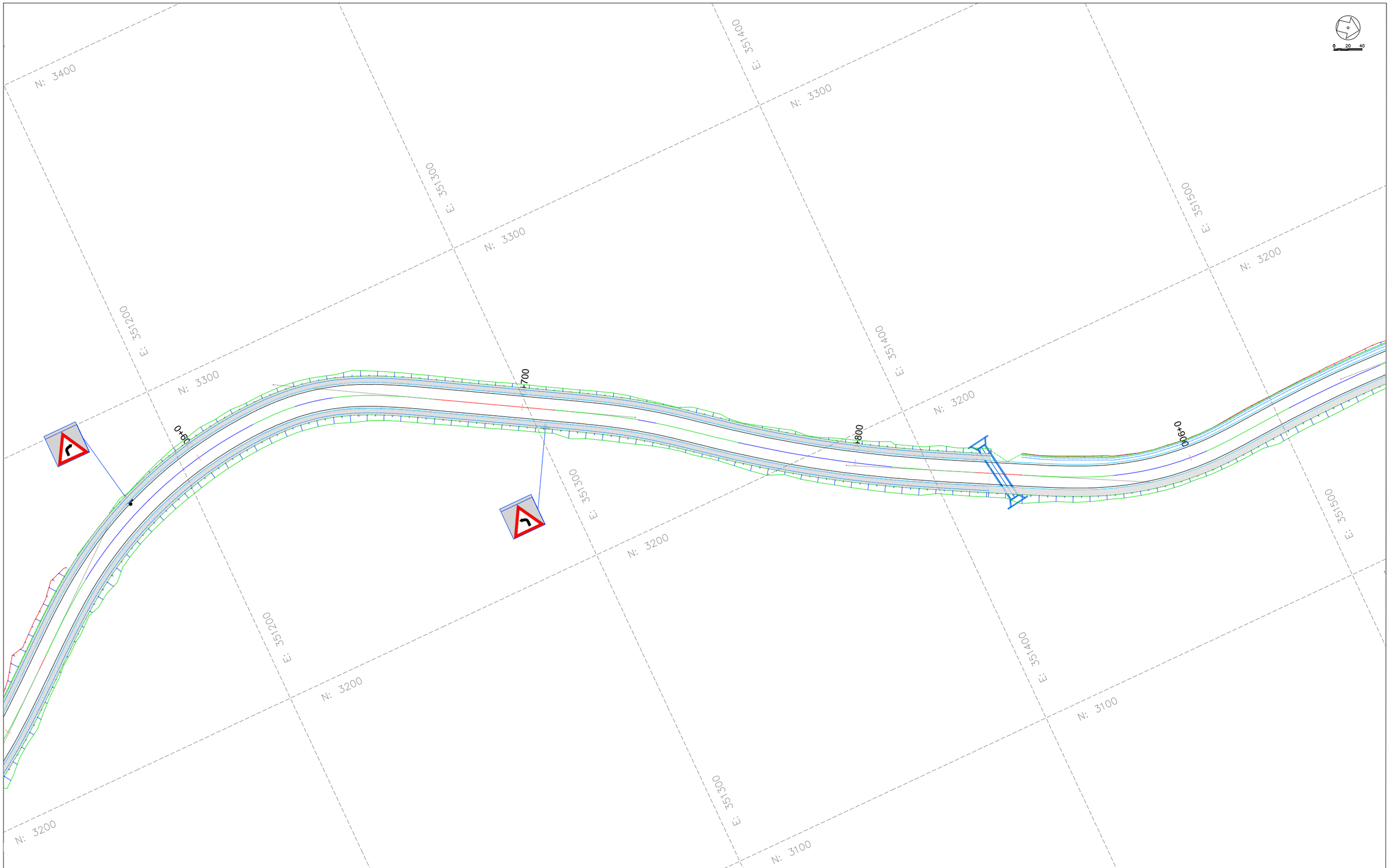

CLIENT:

KENYA NATIONAL HIGHWAY AUTHORITY
Barabara Plaza,
Off Airport South Road,
P. O. Box, 49712 - 00100,
NAIROBI.

KENYA URBAN ROADS AUTHORITY
Barabara Plaza,
Off Airport South Road,
P. O. Box, 49712 - 00100,
NAIROBI.

FINANCIER:

THE WORLD BANK

PROJECT:

HORN OF AFRICA GATEWAY DEVELOPMENT PROJECT (HOAGDP): -

Consultancy Services for the Design and Works Supervision for the Proposed Extension of Meru Bypass.

CONTRACT NO:

KeNHA/RD/CS/D/4205/2024

CONSULTANT:

egis

One Padmore Place 6th Floor,
George Padmore Road,
P. O. Box, 76672 - 00508,
NAIROBI.

DESIGN DETAILS		
Action	Name	Date
Designed By:	S.A	AUG 2025
Drawn By:	J.M	AUG 2025
Checked By:	L.R	AUG 2025
Approved By:	S.O	AUG 2025

DRAWING REVISIONS					
No.	Revision Details	Reviewed	Initials	Date	Approved
		By			
		Checked			
		By			
		Checked			
		By			
		Checked			
		By			
		Checked			
		By			
		Checked			

MERU BYPASS-WESTERN BYPASS ROADS

ROAD SIGNS LAYOUT

ROAD: GIKUMENE JCT-MATE ROAD

CH 0+600 - CH 0+900

DRAWING SCALE:

H: 1:500
V: 1:50

DRAWING NO:

R S L - GKN/MAT - 0 0 3

Doc. Type | Nature of Work | Number

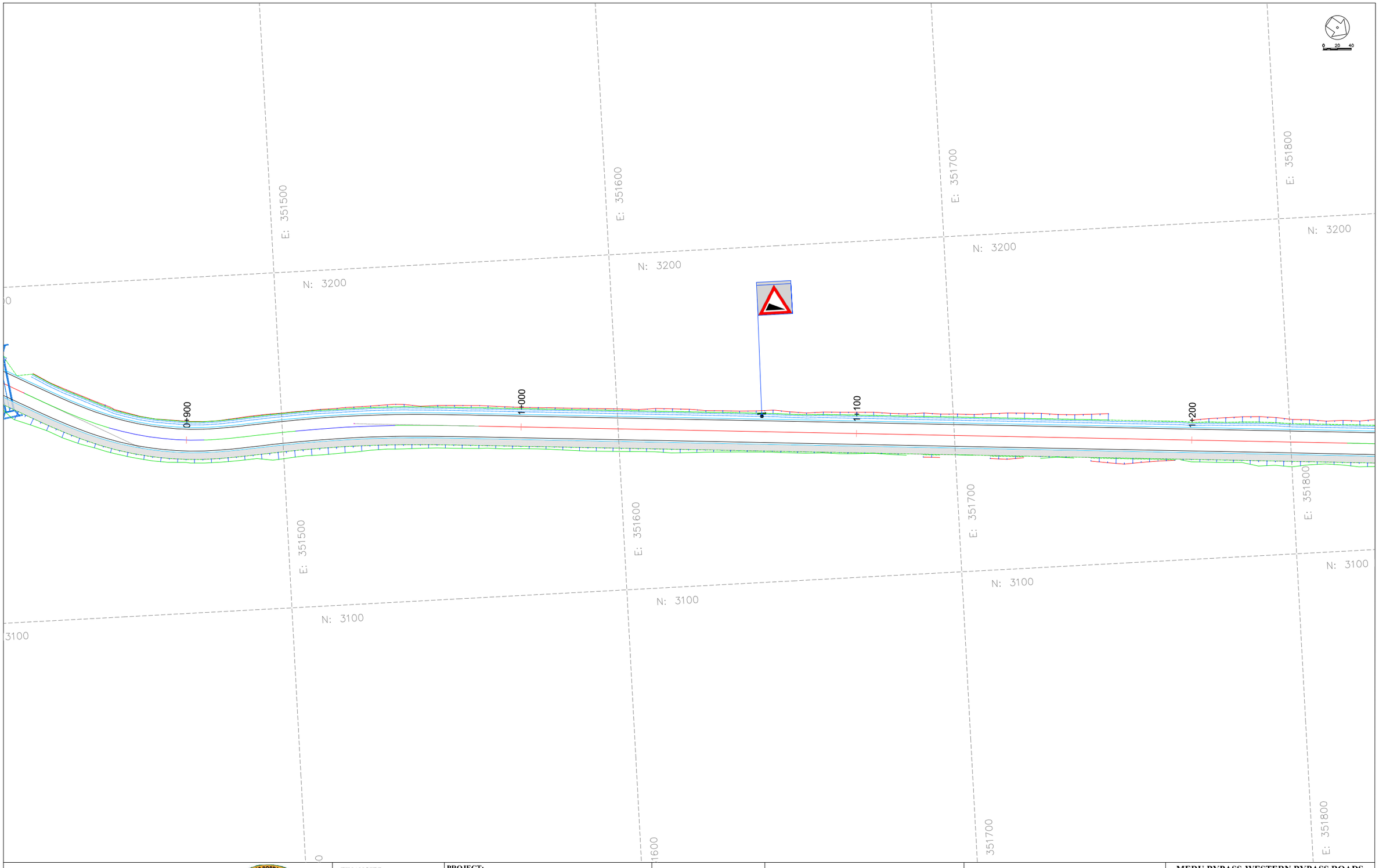

CLIENT:

KENYA NATIONAL HIGHWAY AUTHORITY
Barabara Plaza,
Off Airport South Road,
P. O. Box, 49712 - 00100,
NAIROBI.

KENYA URBAN ROADS AUTHORITY
Barabara Plaza,
Off Airport South Road,
P. O. Box, 49712 - 00100,
NAIROBI.

FINANCIER:

THE WORLD BANK

PROJECT:

HORN OF AFRICA GATEWAY DEVELOPMENT PROJECT (HOAGDP): -

Consultancy Services for the Design and Works Supervision for the Proposed Extension of Meru Bypass.

CONTRACT NO:

KeNHA/RD/CS/D/4205/2024

CONSULTANT:

egis

One Padmore Place 6th Floor,
George Padmore Road,
P. O. Box, 76672 - 00508,
NAIROBI.

DESIGN DETAILS

Action	Name	Date
Designed By:	S.A	AUG 2025
Drawn By:	J.M	AUG 2025
Checked By:	L.R	AUG 2025
Approved By:	S.O	AUG 2025

DRAWING REVISIONS

No.	Revision Details	Reviewed	Initials	Date	Approved
		By			
		Checked			
		By			
		Checked			
		By			
		Checked			
		By			
		Checked			
		By			
		Checked			

MERU BYPASS-WESTERN BYPASS ROADS

ROAD SIGNS LAYOUT

ROAD: GIKUMENE JCT-MATE ROAD

CH 0+900 - CH 1+200

DRAWING SCALE:

H: 1:500
V: 1:50

DRAWING NO:

RSL-GKN/MAT-004
Doc. Type | Nature of Work | Number

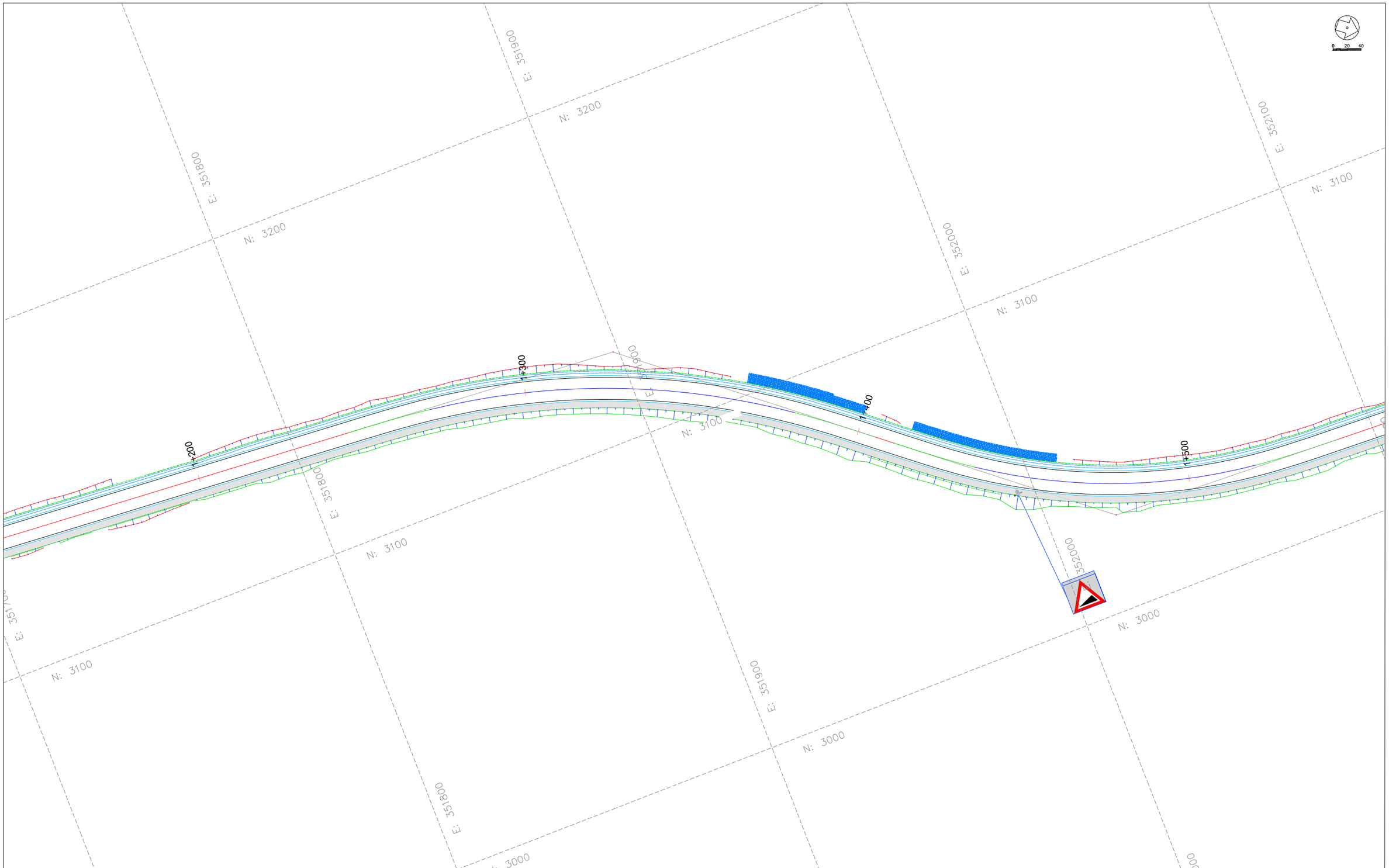

CLIENT:

KENYA NATIONAL HIGHWAY AUTHORITY
Barabara Plaza,
Off Airport South Road,
P. O. Box, 49712 - 00100,
NAIROBI.

KENYA URBAN ROADS AUTHORITY
Barabara Plaza,
Off Airport South Road,
P. O. Box, 49712 - 00100,
NAIROBI.

FINANCIER:

THE WORLD BANK

PROJECT:

HORN OF AFRICA GATEWAY DEVELOPMENT PROJECT (HOAGDP): -

Consultancy Services for the Design and Works Supervision for the Proposed Extension of Meru Bypass.

CONTRACT NO:

KeNHA/RD/CS/D/4205/2024

CONSULTANT:

egis

One Padmore Place 6th Floor,
George Padmore Road,
P. O. Box, 76672 - 00508,
NAIROBI.

DESIGN DETAILS

Action	Name	Date
Designed By:	S.A	AUG 2025
Drawn By:	J.M	AUG 2025
Checked By:	L.R	AUG 2025
Approved By:	S.O	AUG 2025

DRAWING REVISIONS

No.	Revision Details	Reviewed	Initials	Date	Approved
		By			
		Checked			
		By			
		Checked			
		By			
		Checked			
		By			
		Checked			
		By			
		Checked			

MERU BYPASS-WESTERN BYPASS ROADS

ROAD SIGNS LAYOUT

ROAD: GIKUMENE JCT-MATE ROAD

CH 1+200 - CH 1+500

DRAWING SCALE:

H: 1:500
V: 1:50

DRAWING NO:

RSL-GKN/MAT-005
Doc. Type | Nature of Work | Number

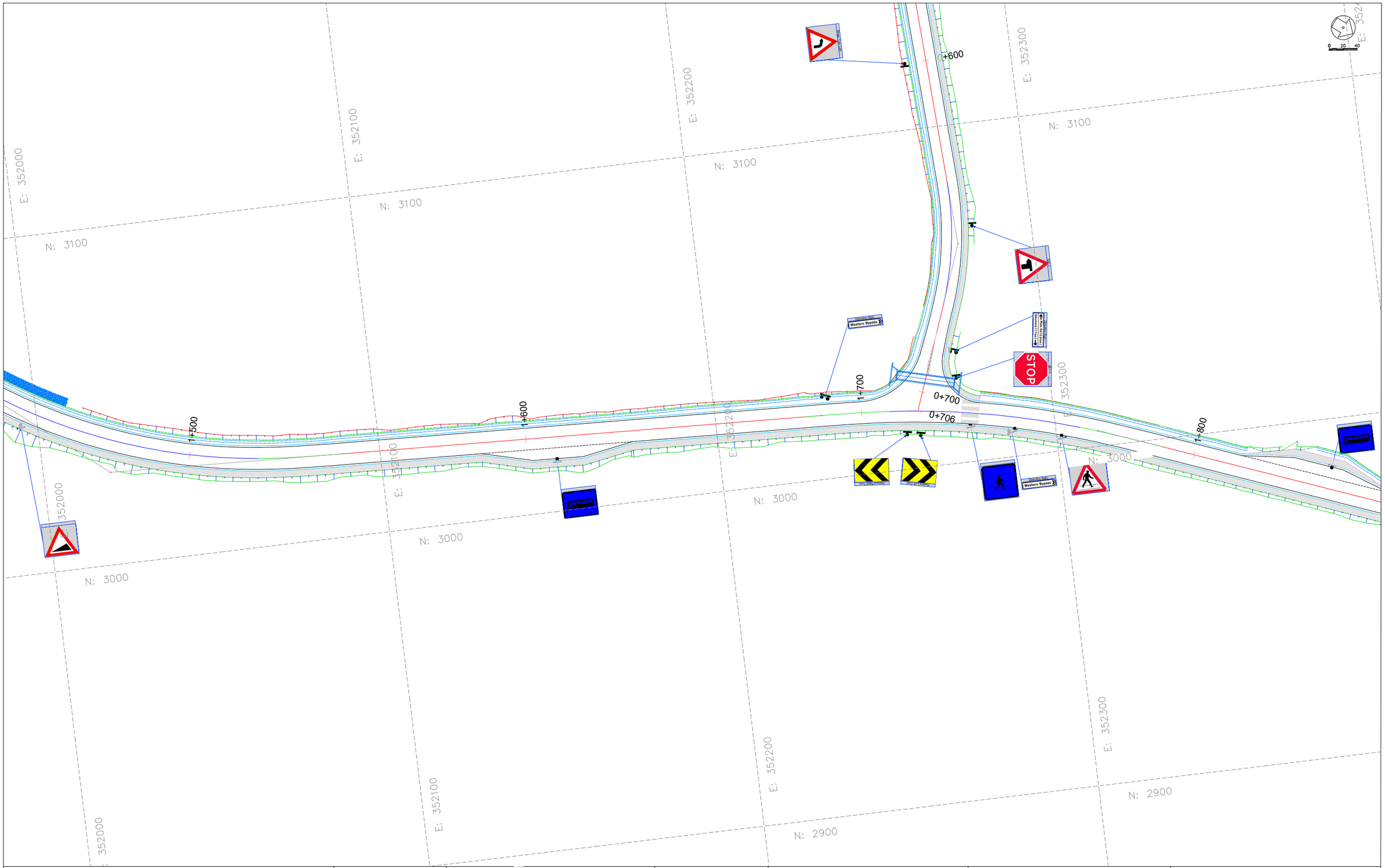

CLIENT:

KENYA NATIONAL HIGHWAY AUTHORITY
Barabara Plaza,
Off Airport South Road,
P. O. Box, 49712 - 00100,
NAIROBI.

KENYA URBAN ROADS AUTHORITY
Barabara Plaza,
Off Airport South Road,
P. O. Box, 49712 - 00100,
NAIROBI.

FINANCIER:

THE WORLD BANK

PROJECT:

HORN OF AFRICA GATEWAY DEVELOPMENT PROJECT (HOAGDP): -

Consultancy Services for the Design and Works Supervision for the Proposed Extension of Meru Bypass.

CONTRACT NO:

KeNHA/RD/CS/D/4205/2024

CONSULTANT:

egis

One Padmore Place 6th Floor,
George Padmore Road,
P. O. Box, 76672 - 00508,
NAIROBI.

DESIGN DETAILS

Action	Name	Date
Designed By:	S.A	AUG 2025
Drawn By:	J.M	AUG 2025
Checked By:	L.R	AUG 2025
Approved By:	S.O	AUG 2025

DRAWING REVISIONS

No.	Revision Details	Reviewed	Initials	Date	Approved
		By			
		Checked			
		By			
		Checked			
		By			
		Checked			
		By			
		Checked			
		By			
		Checked			

MERU BYPASS-WESTERN BYPASS ROADS

ROAD SIGNS LAYOUT

ROAD: GIKUMENE JCT-MATE ROAD

CH 1+500 - CH 1+800

DRAWING SCALE:

H: 1:500
V: 1:50

DRAWING NO:

R S L - GKN/MAT - 0 0 6

Doc. Type | Nature of Work | Number

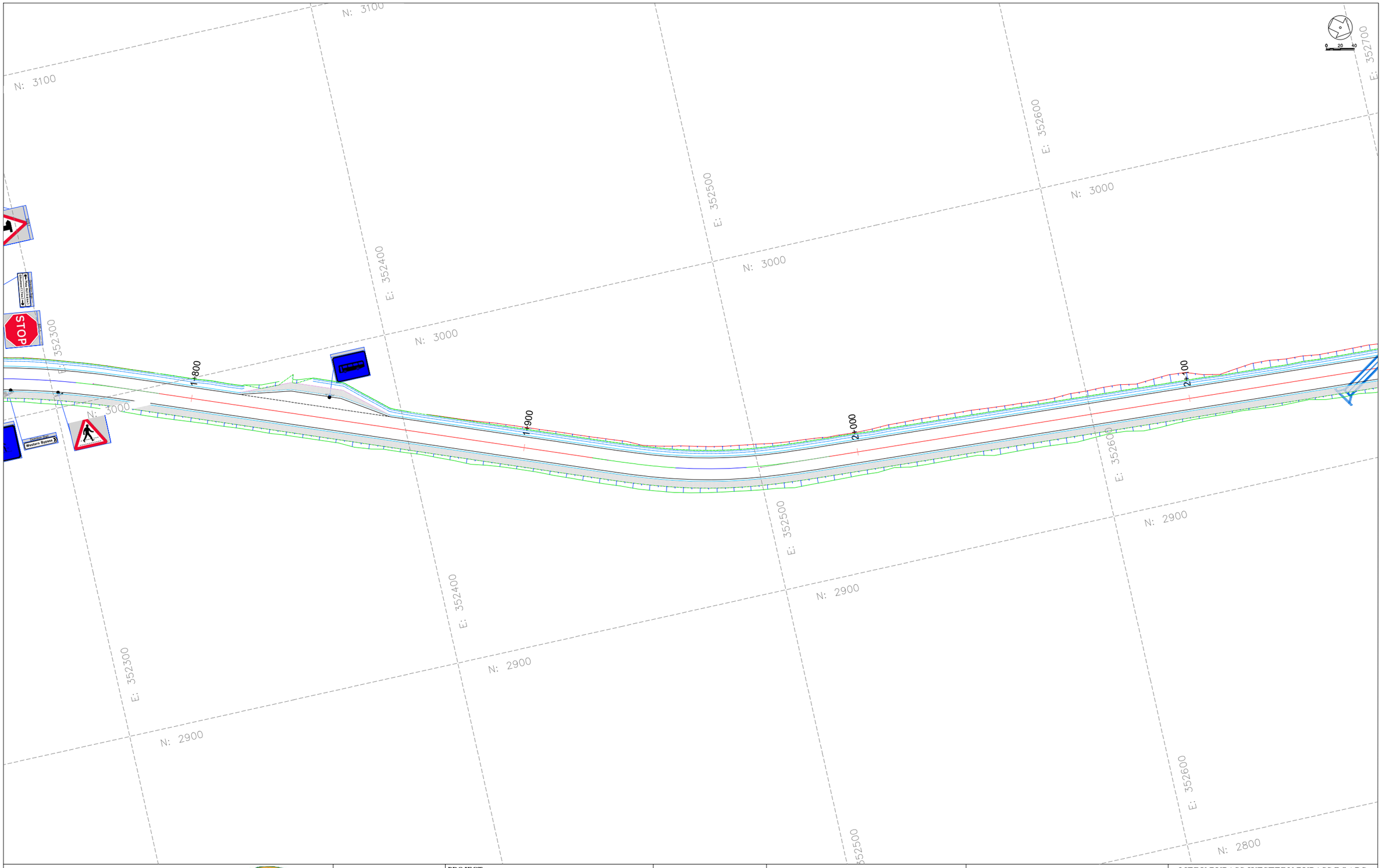

CLIENT:

KENYA NATIONAL HIGHWAY AUTHORITY
Barabara Plaza,
Off Airport South Road,
P. O. Box, 49712 - 00100,
NAIROBI.

KENYA URBAN ROADS AUTHORITY
Barabara Plaza,
Off Airport South Road,
P. O. Box, 49712 - 00100,
NAIROBI.

FINANCIER:

THE WORLD BANK

PROJECT:

HORN OF AFRICA GATEWAY DEVELOPMENT PROJECT (HOAGDP): -

Consultancy Services for the Design and Works Supervision for the Proposed Extension of Meru Bypass.

CONTRACT NO:

KeNHA/RD/CS/D/4205/2024

CONSULTANT:

egis

One Padmore Place 6th Floor,
George Padmore Road,
P. O. Box, 76672 - 00508,
NAIROBI.

DESIGN DETAILS

Action	Name	Date
Designed By:	S.A	AUG 2025
Drawn By:	J.M	AUG 2025
Checked By:	L.R	AUG 2025
Approved By:	S.O	AUG 2025

DRAWING REVISIONS

No.	Revision Details	Reviewed	Initials	Date	Approved
		By			
		Checked			
		By			
		Checked			
		By			
		Checked			
		By			
		Checked			
		By			
		Checked			

MERU BYPASS-WESTERN BYPASS ROADS

ROAD SIGNS LAYOUT

ROAD: GIKUMENE JCT-MATE ROAD

CH 1+800 - CH 2+100

DRAWING SCALE:

H: 1:500
V: 1:50

DRAWING NO:

RSL-GKN/MAT-007

Doc. Type | Nature of Work | Number

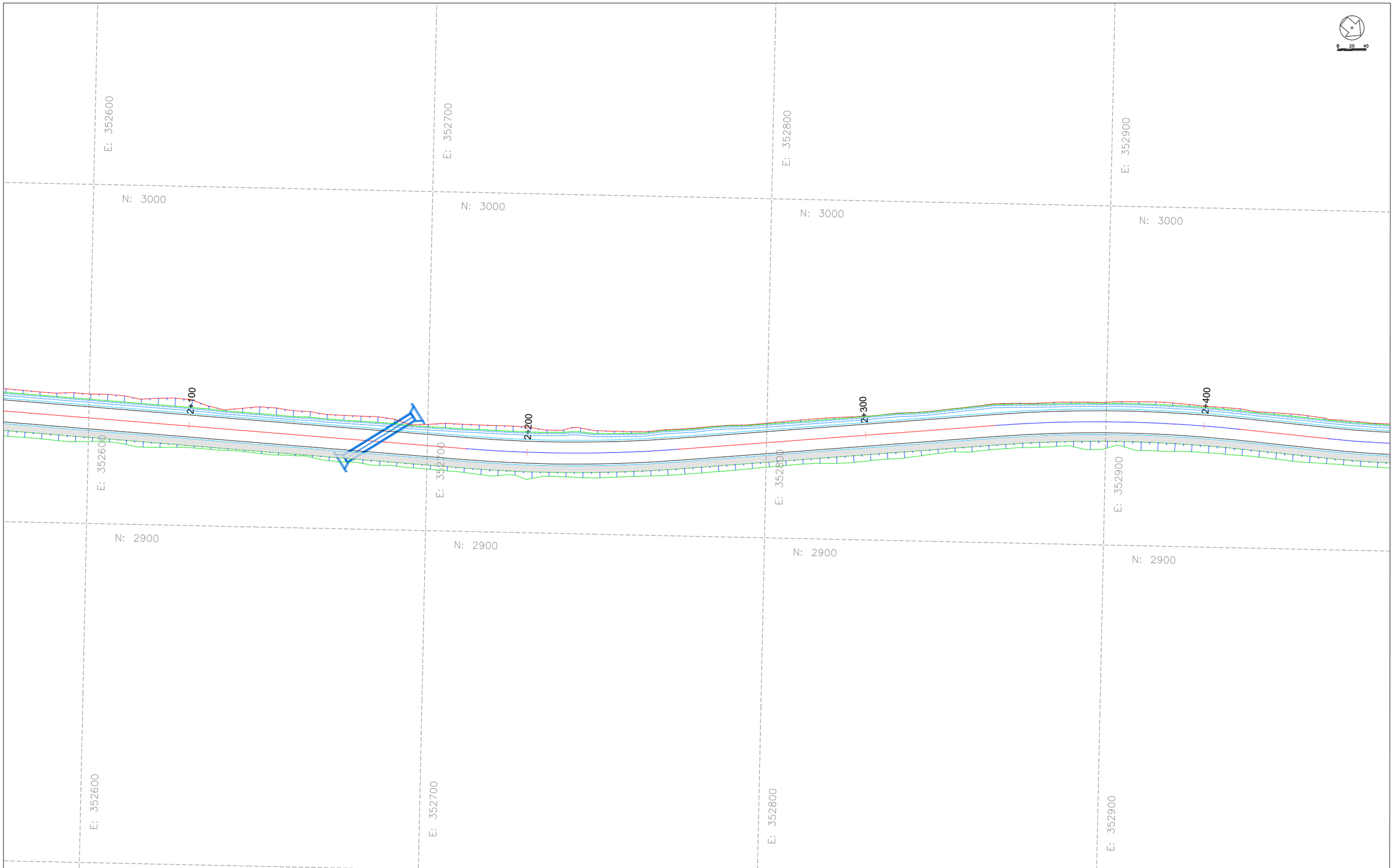

CLIENT:

KENYA NATIONAL HIGHWAY AUTHORITY
Barabara Plaza,
Off Airport South Road,
P. O. Box, 49712 - 00100,
NAIROBI.

KENYA URBAN ROADS AUTHORITY
Barabara Plaza,
Off Airport South Road,
P. O. Box, 49712 - 00100,
NAIROBI.

FINANCIER:

THE WORLD BANK

PROJECT:

HORN OF AFRICA GATEWAY DEVELOPMENT PROJECT (HOAGDP): -

Consultancy Services for the Design and Works Supervision for the Proposed Extension of Meru Bypass.

CONTRACT NO:

KeNHA/RD/CS/D/4205/2024

CONSULTANT:

egis

One Padmore Place 6th Floor,
George Padmore Road,
P. O. Box, 76672 - 00508,
NAIROBI.

DESIGN DETAILS

Action	Name	Date
Designed By:	S.A	AUG 2025
Drawn By:	J.M	AUG 2025
Checked By:	L.R	AUG 2025
Approved By:	S.O	AUG 2025

DRAWING REVISIONS

No.	Revision Details	Reviewed	Initials	Date	Approved
		By			
		Checked			
		By			
		Checked			
		By			
		Checked			
		By			
		Checked			
		By			
		Checked			

MERU BYPASS-WESTERN BYPASS ROADS

ROAD SIGNS LAYOUT

ROAD: GIKUMENE JCT-MATE ROAD

CH 2+100 - CH 2+400

DRAWING SCALE:

H: 1:500
V: 1:50

DRAWING NO:

RSL-GKN/MAT-008

Doc. Type | Nature of Work | Number

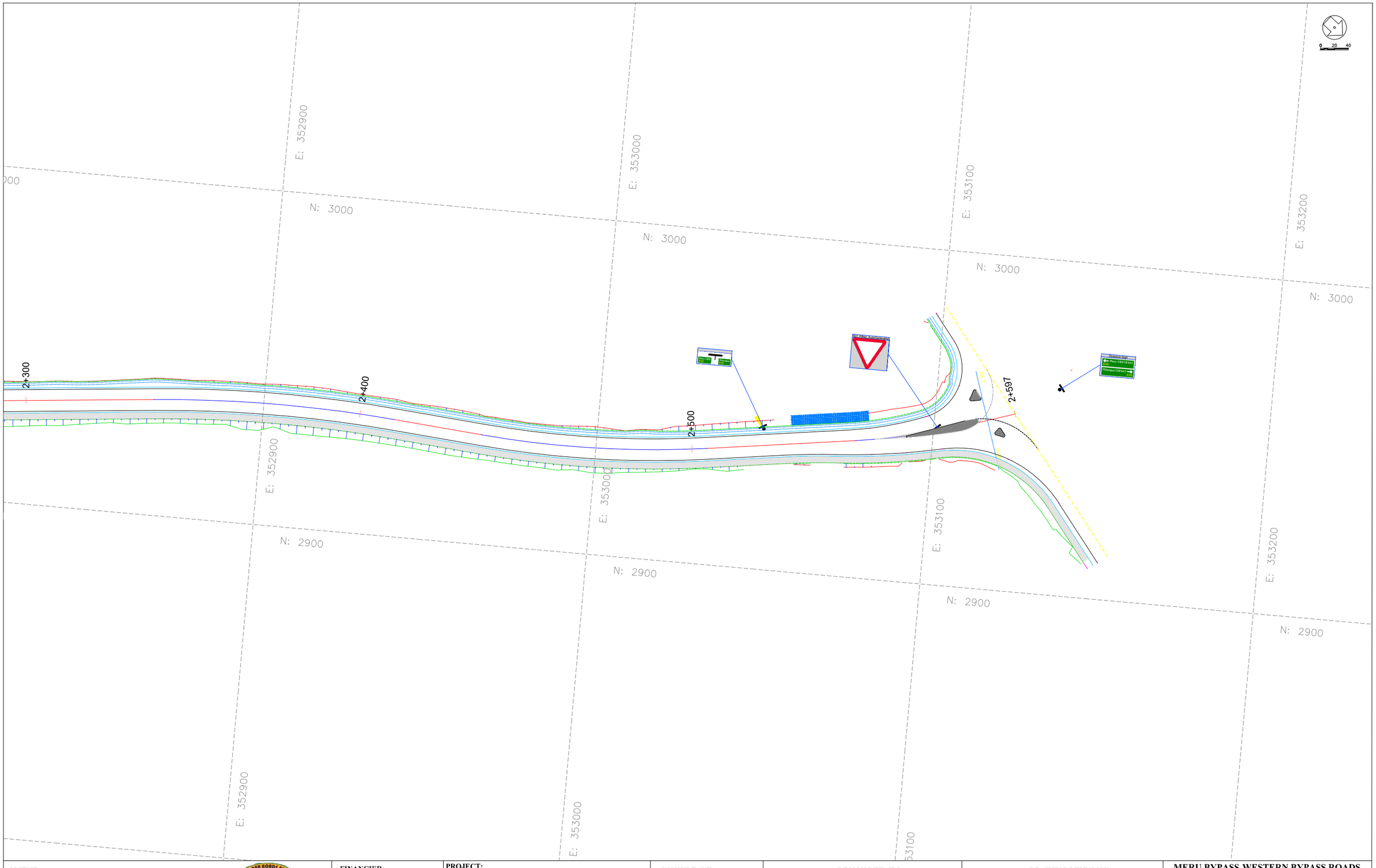

CLIENT:

KENYA NATIONAL HIGHWAY AUTHORITY
Barabara Plaza,
Off Airport South Road,
P. O. Box, 49712 - 00100,
NAIROBI.

KENYA URBAN ROADS AUTHORITY
Barabara Plaza,
Off Airport South Road,
P. O. Box, 49712 - 00100,
NAIROBI.

FINANCIER:

THE WORLD BANK

PROJECT:

HORN OF AFRICA GATEWAY DEVELOPMENT PROJECT (HOAGDP): -

Consultancy Services for the Design and Works Supervision for the Proposed Extension of Meru Bypass.

CONTRACT NO:

KeNHA/RD/CS/D/4205/2024

CONSULTANT:

egis

One Padmore Place 6th Floor,
George Padmore Road,
P. O. Box, 76672 - 00508,
NAIROBI.

DESIGN DETAILS

Action	Name	Date
Designed By:	S.A	AUG 2025
Drawn By:	J.M	AUG 2025
Checked By:	L.R	AUG 2025
Approved By:	S.O	AUG 2025

DRAWING REVISIONS

No.	Revision Details	Reviewed	Initials	Date	Approved
		By			
		Checked			
		By			
		Checked			
		By			
		Checked			
		By			
		Checked			
		By			
		Checked			

MERU BYPASS-WESTERN BYPASS ROADS

ROAD SIGNS LAYOUT

ROAD: GIKUMENE JCT-MATE ROAD

CH 2+400 - CH 2+597.35

DRAWING SCALE:

H: 1:500
V: 1:50

DRAWING NO:

R S L - GKN/MAT - 0 0 9
Doc. Type | Nature of Work | Number

MERU BY-PASS ROADS

TYPICAL DETAILS

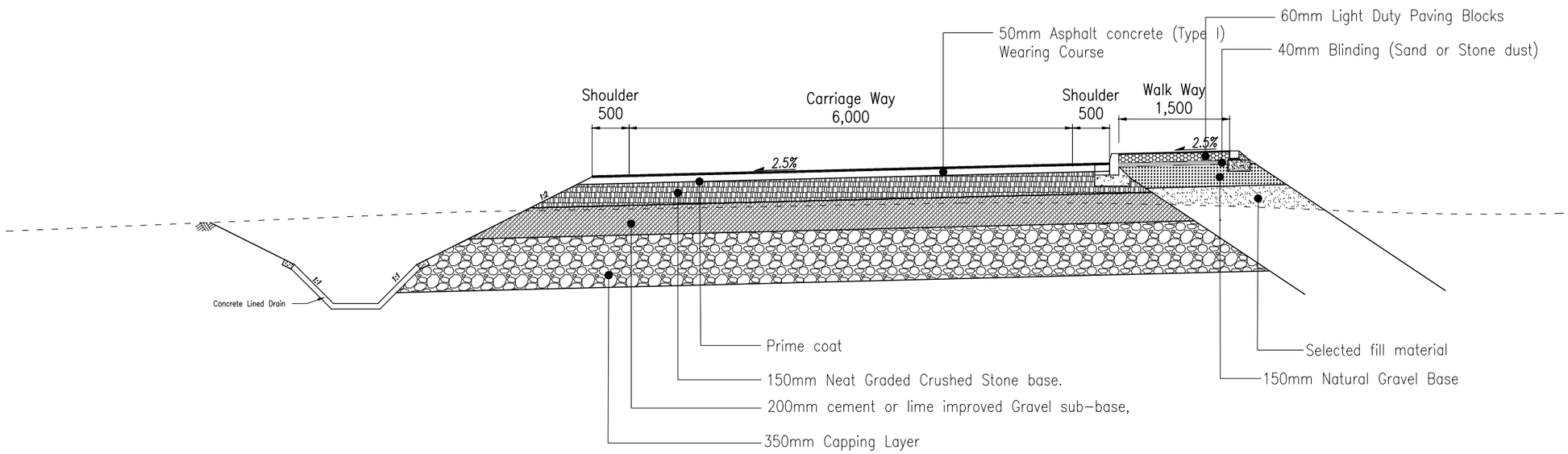

TYPICAL CROSS SECTION TYPE 1 - NTS
RUNOGONE KAITHE (START TO END)

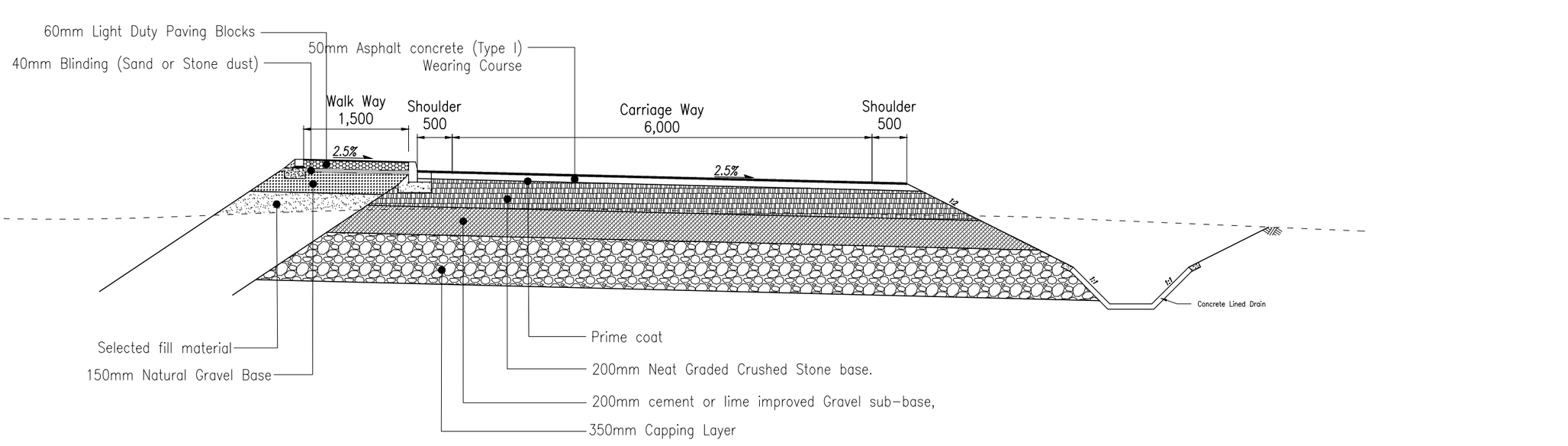

TYPICAL CROSS SECTION TYPE 1 - NTS
WESTERN BYPASS LINK RD
(START - END)

CLIENT:
KENYA NATIONAL HIGHWAY AUTHORITY
Barabara Plaza,
Off Airport South Road,
P. O. Box, 49712 - 00100,
NAIROBI.

KENYA URBAN ROADS AUTHORITY
Barabara Plaza,
Off Airport South Road,
P. O. Box, 49712 - 00100,
NAIROBI.

FINANCIER:
THE WORLD BANK

PROJECT:
HORN OF AFRICA GATEWAY DEVELOPMENT PROJECT (HOAGDP): -
Consultancy Services for the Design and Works Supervision for the Proposed Extension of Meru Bypass.

CONTRACT NO:
KeNHA/RD/CS/D/4205/2024

CONSULTANT:
egis
One Padmore Place 6th Floor,
George Padmore Road,
P. O. Box, 76672 - 00508,
NAIROBI.

DESIGN DETAILS

Action	Name	Date
Designed By:	C.J	AUG 2025
Drawn By:	C.J	AUG 2025
Checked By:	S.I	AUG 2025
Approved By:	L.R	AUG 2025

DRAWING REVISIONS

No.	Revision Details	Reviewed	Initials	Date	Approved
		By			
		Checked			
		By			
		Checked			
		By			
		Checked			
		By			
		Checked			
		By			
		Checked			

DRAWING TITLE:
PAVEMENT CROSS SECTION

DRAWING SCALE:
AS SHOWN

DRAWING NO:
TYP - PAV - 001
(1 Of 8)

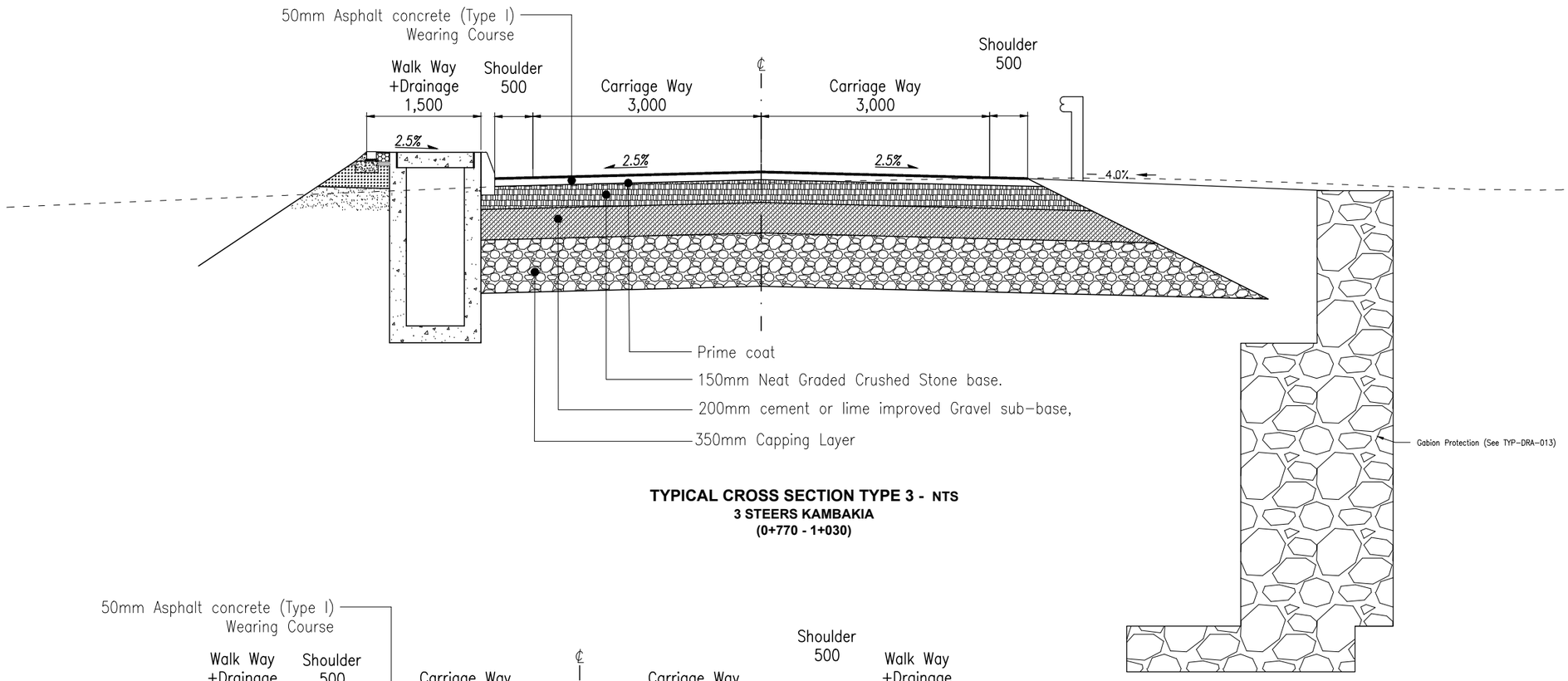

TYPICAL CROSS SECTION TYPE 3 - NTS
3 STEERS KAMBAKIA
(0+770 - 1+030)

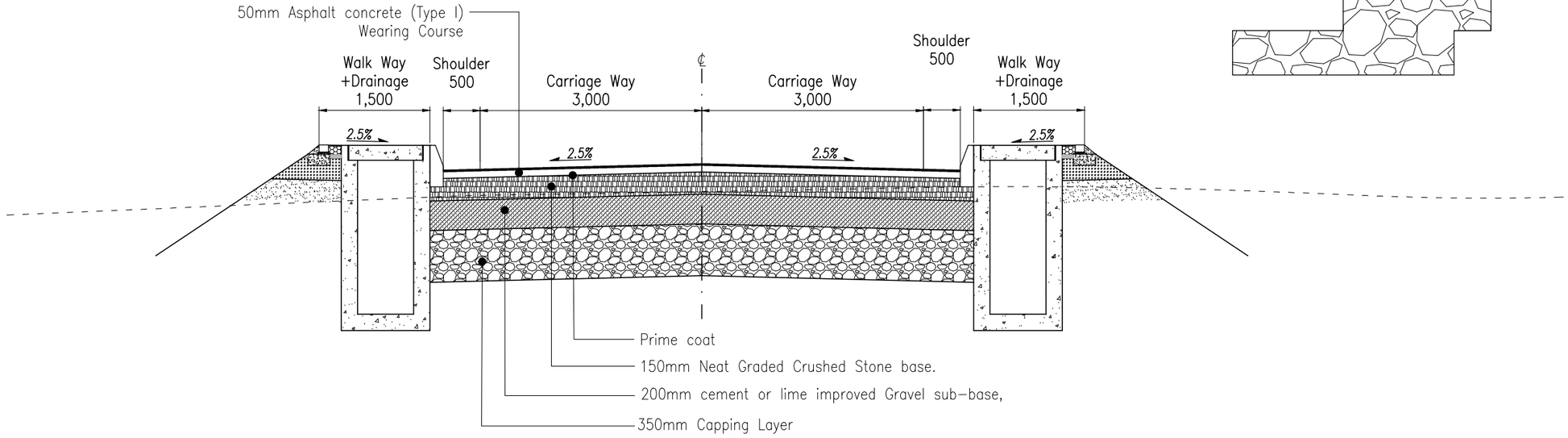

TYPICAL CROSS SECTION TYPE 2 - NTS
STEERS KAMBAKIA(0+000 - 0+770 AND 1+030 - END)
HOSPITAL KIRAMBURINE (0+476 - END)

CLIENT:
KENYA NATIONAL HIGHWAY AUTHORITY
Barabara Plaza,
Off Airport South Road,
P. O. Box, 49712 - 00100,
NAIROBI.

KENYA URBAN ROADS AUTHORITY
Barabara Plaza,
Off Airport South Road,
P. O. Box, 49712 - 00100,
NAIROBI.

FINANCIER:
THE WORLD BANK

PROJECT:
HORN OF AFRICA GATEWAY DEVELOPMENT PROJECT (HOAGDP): -

Consultancy Services for the Design and Works Supervision for the Proposed Extension of Meru Bypass.

CONTRACT NO:
KeNHA/RD/CS/D/4205/2024

CONSULTANT:
egis
One Padmore Place 6th Floor,
George Padmore Road,
P. O. Box, 76672 - 00508,
NAIROBI.

DESIGN DETAILS

Action	Name	Date
Designed By:	C.J	AUG 2025
Drawn By:	C.J	AUG 2025
Checked By:	S.I	AUG 2025
Approved By:	L.R	AUG 2025

DRAWING REVISIONS

No.	Revision Details	Reviewed	Initials	Date	Approved
		By			
		Checked			
		By			
		Checked			
		By			
		Checked			
		By			
		Checked			
		By			
		Checked			

DRAWING TITLE:
PAVEMENT CROSS SECTION

DRAWING SCALE:
AS SHOWN

DRAWING NO:
TYP - PAV - 001
(2 Of 8)

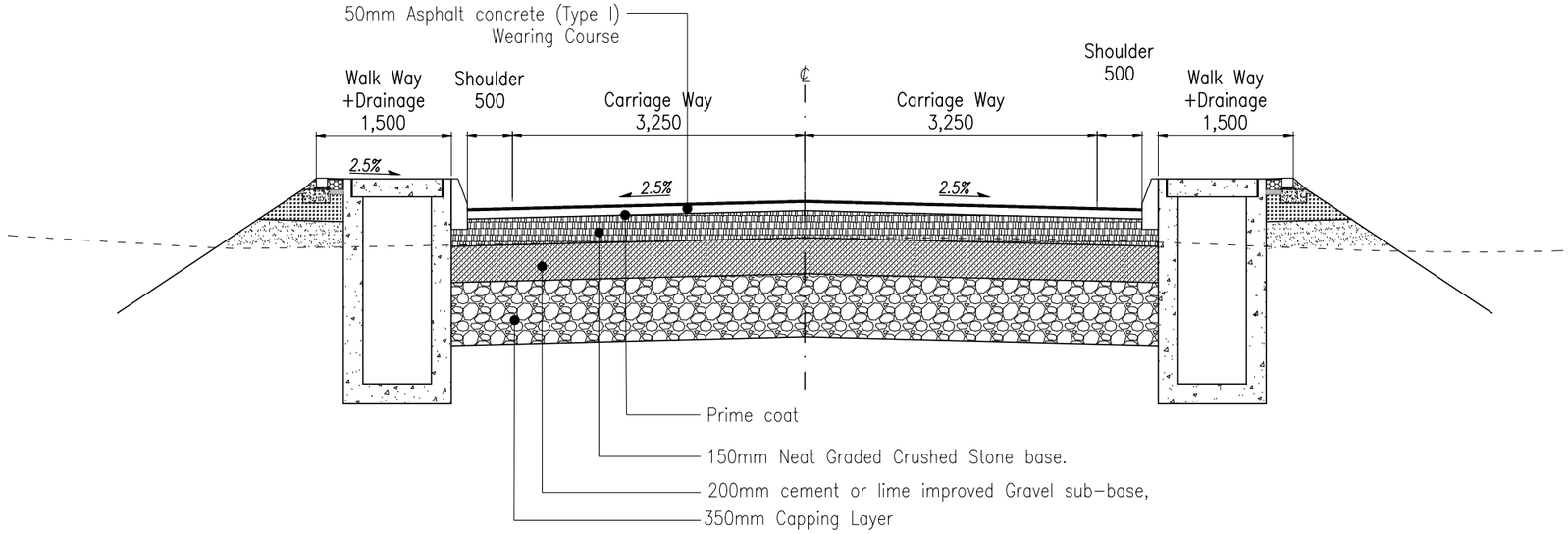

TYPICAL CROSS SECTION TYPE 4 - NTS
KAMBAKIA KAGOTONE RD (0+000 - 0+450 AND 2+700-END)
KONGOACHEKE KWAMUKURU (START TO END)
KAGOTONE KEMU (START TO END)

CLIENT:
KENYA NATIONAL HIGHWAY AUTHORITY
Barabara Plaza,
Off Airport South Road,
P. O. Box, 49712 - 00100,
NAIROBI.

KENYA URBAN ROADS AUTHORITY
Barabara Plaza,
Off Airport South Road,
P. O. Box, 49712 - 00100,
NAIROBI.

FINANCIER:
THE WORLD BANK

PROJECT:
HORN OF AFRICA GATEWAY DEVELOPMENT PROJECT (HOAGDP): -

Consultancy Services for the Design and Works Supervision for the Proposed Extension of Meru Bypass.

CONTRACT NO:
KeNHA/RD/CS/D/4205/2024

CONSULTANT:
One Padmore Place 6th Floor,
George Padmore Road,
P. O. Box, 76672 - 00508,
NAIROBI.

DESIGN DETAILS

Action	Name	Date
Designed By:	C.J	AUG 2025
Drawn By:	C.J	AUG 2025
Checked By:	S.I	AUG 2025
Approved By:	L.R	AUG 2025

DRAWING REVISIONS

No.	Revision Details	Reviewed	Initials	Date	Approved
		By			
		Checked			
		By			
		Checked			
		By			
		Checked			
		By			
		Checked			
		By			
		Checked			

DRAWING TITLE:
PAVEMENT CROSS SECTION

DRAWING SCALE:
AS SHOWN

DRAWING NO:
TYP - PAV - 001
(3 Of 8)

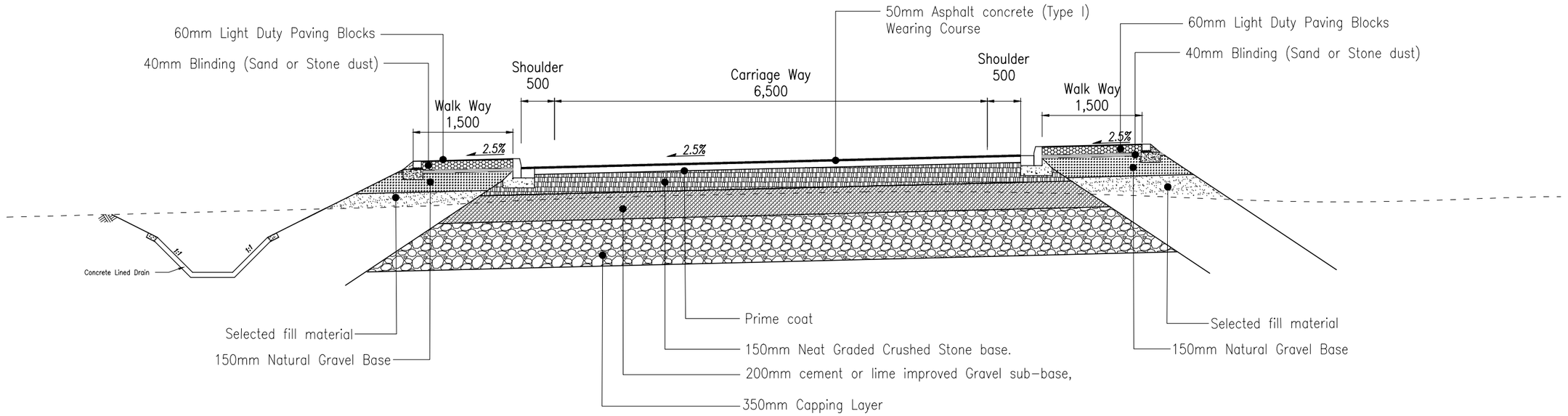

TYPICAL CROSS SECTION TYPE 5 - NTS
KAMBAKIA KAGOTONE RD (0+451 - 1+310)

CLIENT:
KENYA NATIONAL HIGHWAY AUTHORITY
Barabara Plaza,
Off Airport South Road,
P. O. Box, 49712 - 00100,
NAIROBI.

KENYA URBAN ROADS AUTHORITY
Barabara Plaza,
Off Airport South Road,
P. O. Box, 49712 - 00100,
NAIROBI.

FINANCIER:
THE WORLD BANK

PROJECT:
HORN OF AFRICA GATEWAY DEVELOPMENT PROJECT (HOAGDP): -

Consultancy Services for the Design and Works Supervision for the Proposed Extension of Meru Bypass.

CONTRACT NO:
KeNHA/RD/CS/D/4205/2024

CONSULTANT:
One Padmore Place 6th Floor,
George Padmore Road,
P. O. Box, 76672 - 00508,
NAIROBI.

DESIGN DETAILS

Action	Name	Date
Designed By:	C.J	AUG 2025
Drawn By:	C.J	AUG 2025
Checked By:	S.I	AUG 2025
Approved By:	L.R	AUG 2025

DRAWING REVISIONS

No.	Revision Details	Reviewed	Initials	Date	Approved
		By			
		Checked			
		By			
		Checked			
		By			
		Checked			
		By			
		Checked			
		By			
		Checked			

DRAWING TITLE:
PAVEMENT CROSS SECTION

DRAWING SCALE:
AS SHOWN

DRAWING NO:
TYP - PAV - 001
(4 Of 8)

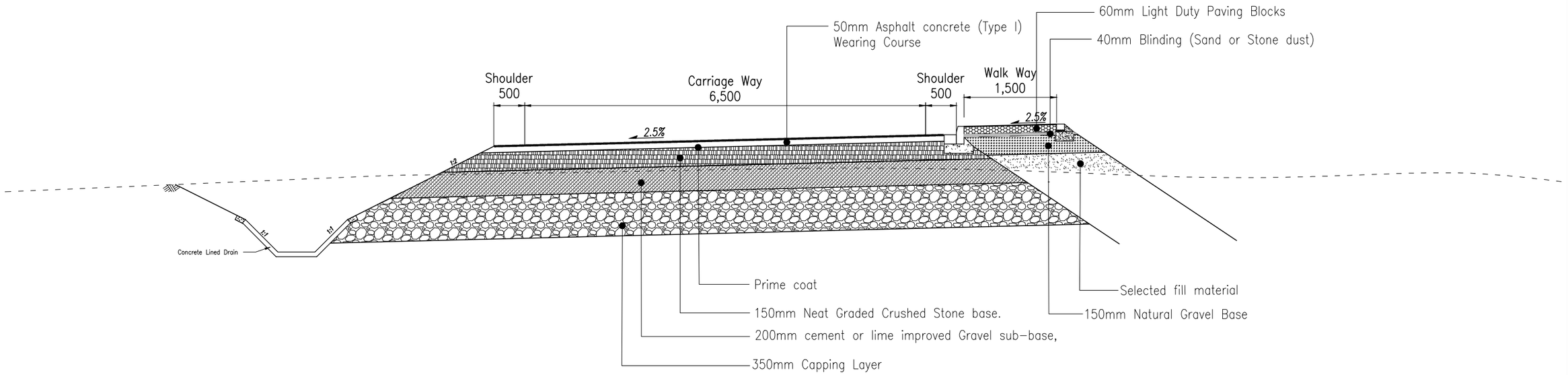

TYPICAL CROSS SECTION TYPE 6- NTS
KAMBAKIA KAGOTONE (C91 JCT) (1+311 - 2+700)
KONGO GARDENS KAMBAKIA LINK (START - END)

CLIENT:

KENYA NATIONAL HIGHWAY AUTHORITY
Barabara Plaza,
Off Airport South Road,
P. O. Box, 49712 - 00100,
NAIROBI.

KENYA URBAN ROADS AUTHORITY
Barabara Plaza,
Off Airport South Road,
P. O. Box, 49712 - 00100,
NAIROBI.

FINANCIER:

THE WORLD BANK

PROJECT:

HORN OF AFRICA GATEWAY DEVELOPMENT PROJECT (HOAGDP): -

Consultancy Services for the Design and Works Supervision for the Proposed Extension of Meru Bypass.

CONTRACT NO:

KeNHA/RD/CS/D/4205/2024

CONSULTANT:

egis

One Padmore Place 6th Floor,
George Padmore Road,
P. O. Box, 76672 - 00508,
NAIROBI.

DESIGN DETAILS

Action	Name	Date
Designed By:	C.J	AUG 2025
Drawn By:	C.J	AUG 2025
Checked By:	S.I	AUG 2025
Approved By:	L.R	AUG 2025

DRAWING REVISIONS

No.	Revision Details	Reviewed	Initials	Date	Approved
		By			
		Checked			
		By			
		Checked			
		By			
		Checked			
		By			
		Checked			
		By			
		Checked			
		By			
		Checked			

DRAWING TITLE:

PAVEMENT CROSS SECTION

DRAWING SCALE:

AS SHOWN

DRAWING NO:

TYP - PAV - 001
(5 Of 8)

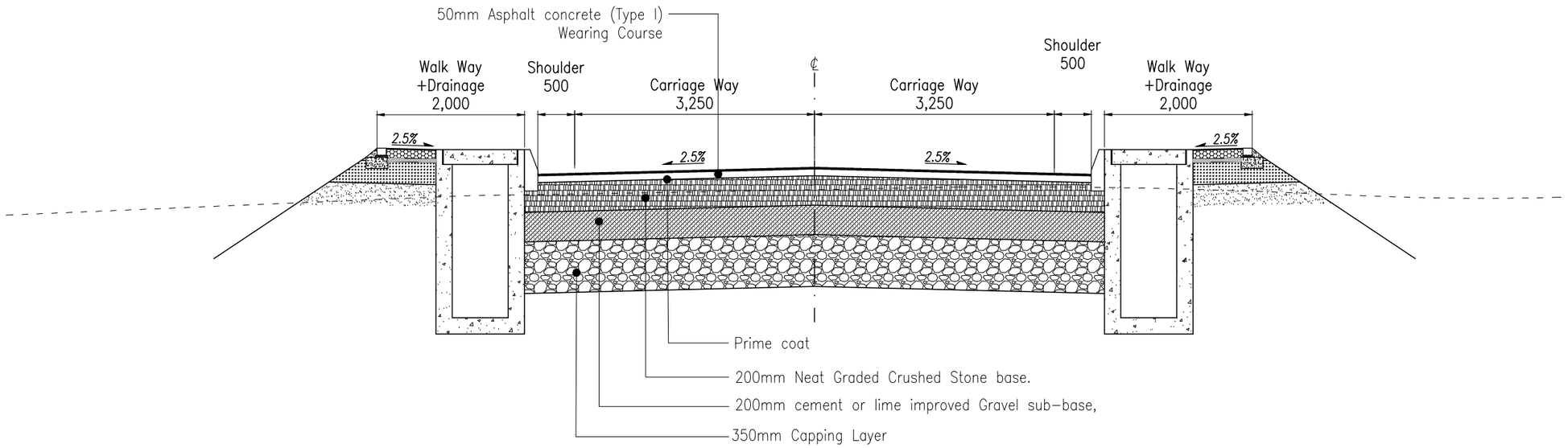

TYPICAL CROSS SECTION TYPE 8 - NTS
GIKUMENE MATE RD
(0+000 - 0+840)

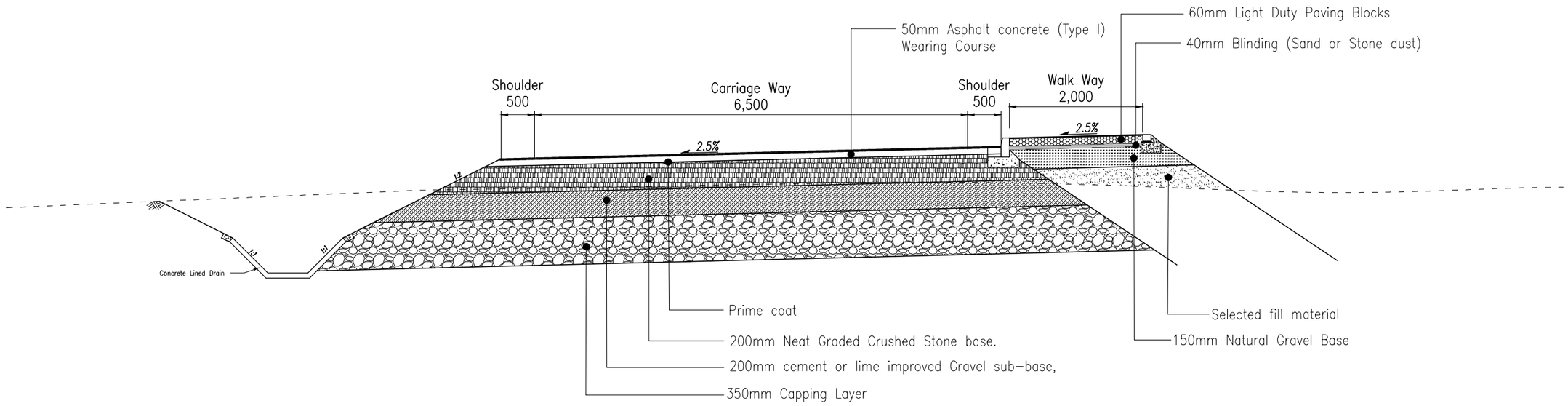

TYPICAL CROSS SECTION TYPE 7- NTS
GIKUMENE MATE RD
(0+840 - END)

CLIENT:
Kenya National Highways Authority
Quality Highways, Better Connections
KENYA NATIONAL HIGHWAY AUTHORITY
Barabara Plaza,
Off Airport South Road,
P. O. Box, 49712 - 00100,
NAIROBI.

KENYA URBAN ROADS AUTHORITY
Barabara Plaza,
Off Airport South Road,
P. O. Box, 49712 - 00100,
NAIROBI.

FINANCIER:
THE WORLD BANK

PROJECT:
HORN OF AFRICA GATEWAY DEVELOPMENT PROJECT (HOAGDP): -
Consultancy Services for the Design and Works Supervision for the Proposed Extension of Meru Bypass.

CONTRACT NO:
KeNHA/RD/CS/D/4205/2024

CONSULTANT:
egis
One Padmore Place 6th Floor,
George Padmore Road,
P. O. Box, 76672 - 00508,
NAIROBI.

DESIGN DETAILS

Action	Name	Date
Designed By:	C.J	AUG 2025
Drawn By:	C.J	AUG 2025
Checked By:	S.I	AUG 2025
Approved By:	L.R	AUG 2025

DRAWING REVISIONS

No.	Revision Details	Reviewed	Initials	Date	Approved
		By			
		Checked			
		By			
		Checked			
		By			
		Checked			
		By			
		Checked			
		By			
		Checked			

DRAWING TITLE:
PAVEMENT CROSS SECTION

DRAWING SCALE:
AS SHOWN

DRAWING NO:
TYP - PAV - 001
(6 Of 8)

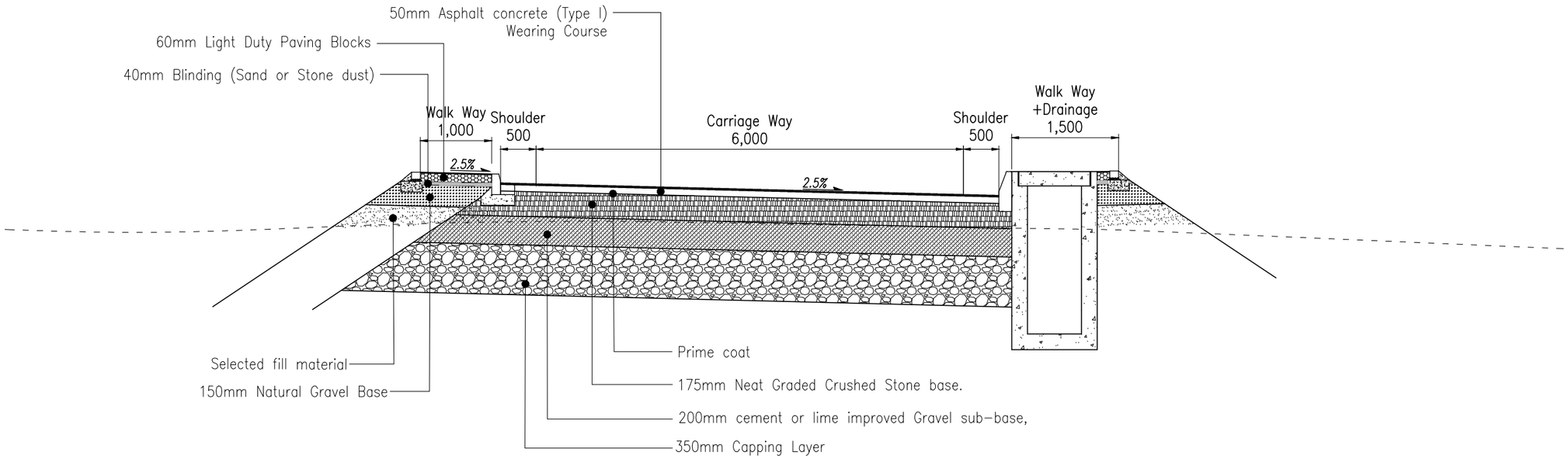

TYPICAL CROSS SECTION TYPE 9 - NTS
HOSPITAL KIRAMBURINE
(0+000 - 0+245)

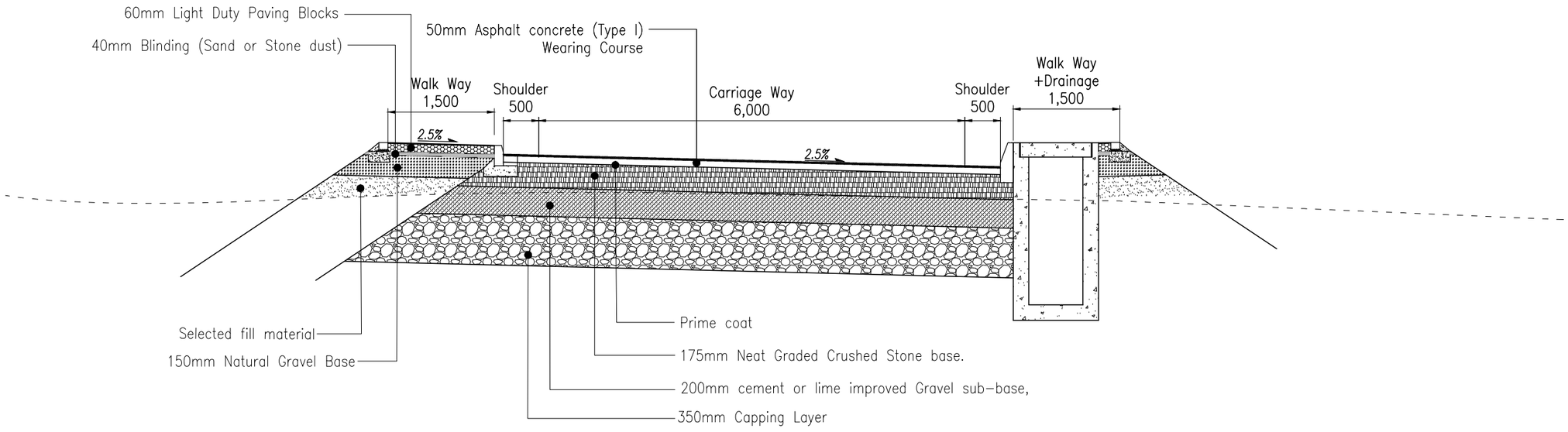

TYPICAL CROSS SECTION TYPE 10 - NTS
HOSPITAL KIRAMBURINE
(0+246 - 0+475)

CLIENT:

KENYA NATIONAL HIGHWAY AUTHORITY
Barabara Plaza,
Off Airport South Road,
P. O. Box, 49712 - 00100,
NAIROBI.

KENYA URBAN ROADS AUTHORITY
Barabara Plaza,
Off Airport South Road,
P. O. Box, 49712 - 00100,
NAIROBI.

FINANCIER:

THE WORLD BANK

PROJECT:

HORN OF AFRICA GATEWAY DEVELOPMENT PROJECT (HOAGDP): -

Consultancy Services for the Design and Works Supervision for the Proposed Extension of Meru Bypass.

CONTRACT NO:

KeNHA/RD/CS/D/4205/2024

CONSULTANT:

One Padmore Place 6th Floor,
George Padmore Road,
P. O. Box, 76672 - 00508,
NAIROBI.

DESIGN DETAILS

Action	Name	Date
Designed By:	C.J	AUG 2025
Drawn By:	C.J	AUG 2025
Checked By:	S.I	AUG 2025
Approved By:	L.R	AUG 2025

DRAWING REVISIONS

No.	Revision Details	Reviewed	Initials	Date	Approved
		By			
		Checked			
		By			
		Checked			
		By			
		Checked			
		By			
		Checked			
		By			
		Checked			

DRAWING TITLE:
PAVEMENT CROSS SECTION

DRAWING SCALE:
AS SHOWN

DRAWING NO:
TYP - PAV - 001
(7 Of 8)

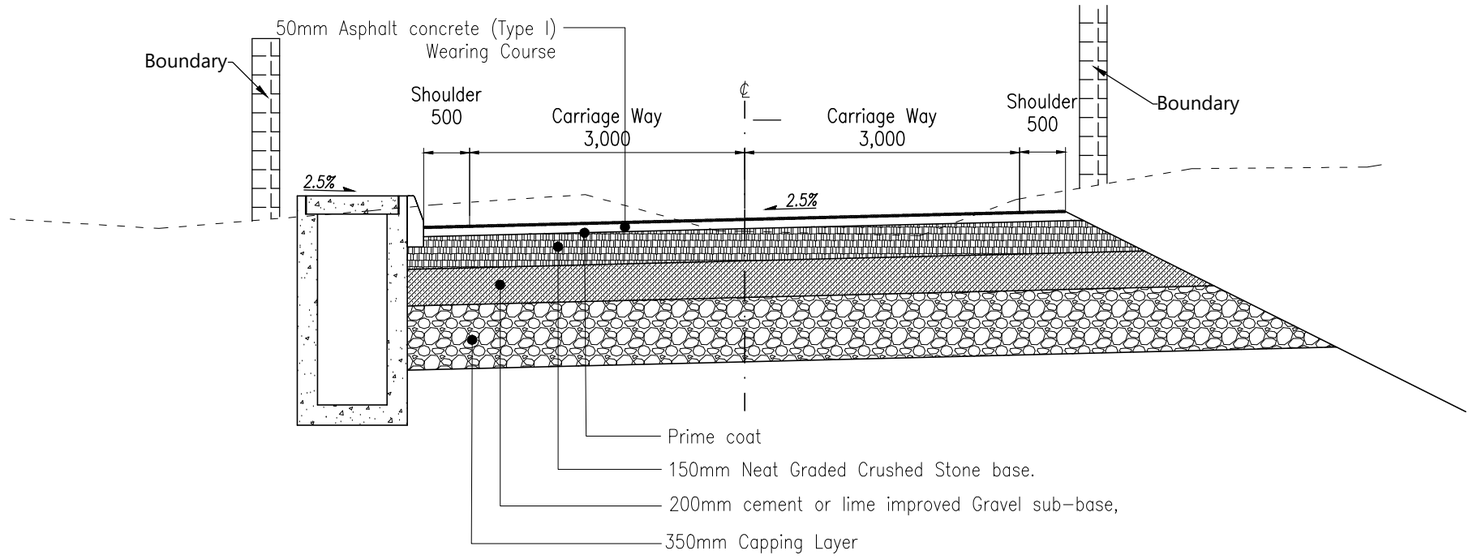

TYPICAL CROSS SECTION TYPE 11 - NTS
HOSPITAL LINK 1 - MERU BUS TERMINUS (0+000 - 0+245)
HOSPITAL LINK 3 - MEWAS (START - END)

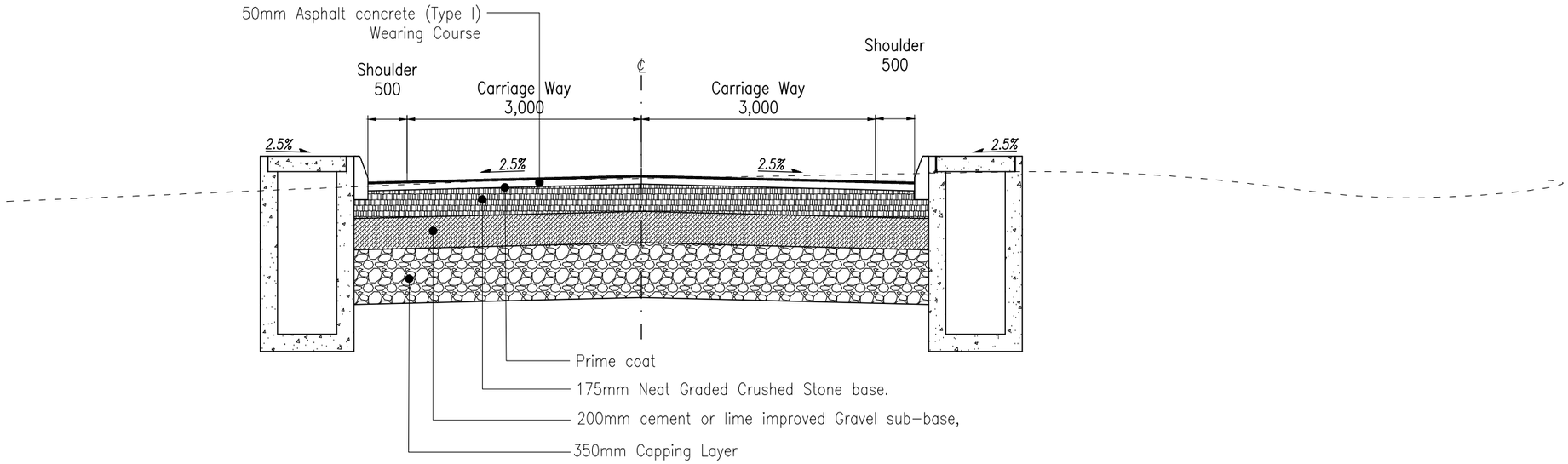

TYPICAL CROSS SECTION TYPE 12 - NTS
HOSPITAL LINK 1 - MERU BUS TERMINUS (0+246 - END)
HOSPITAL LINK 2 - MEWAS (START-END)

CLIENT:
KENYA NATIONAL HIGHWAY AUTHORITY
Barabara Plaza,
Off Airport South Road,
P. O. Box, 49712 - 00100,
NAIROBI.

KENYA URBAN ROADS AUTHORITY
Barabara Plaza,
Off Airport South Road,
P. O. Box, 49712 - 00100,
NAIROBI.

FINANCIER:
THE WORLD BANK

PROJECT:
HORN OF AFRICA GATEWAY DEVELOPMENT PROJECT (HOAGDP): -

Consultancy Services for the Design and Works Supervision for the Proposed Extension of Meru Bypass.

CONTRACT NO:
KeNHA/RD/CS/D/4205/2024

CONSULTANT:
egis
One Padmore Place 6th Floor,
George Padmore Road,
P. O. Box, 76672 - 00508,
NAIROBI.

DESIGN DETAILS

Action	Name	Date
Designed By:	C.J	AUG 2025
Drawn By:	C.J	AUG 2025
Checked By:	S.I	AUG 2025
Approved By:	L.R	AUG 2025

DRAWING REVISIONS

No.	Revision Details	Reviewed	Initials	Date	Approved
		By			
		Checked			
		By			
		Checked			
		By			
		Checked			
		By			
		Checked			
		By			
		Checked			

DRAWING TITLE:
PAVEMENT CROSS SECTION

DRAWING SCALE:
AS SHOWN

DRAWING NO:
TYP - PAV - 001
(8 Of 8)

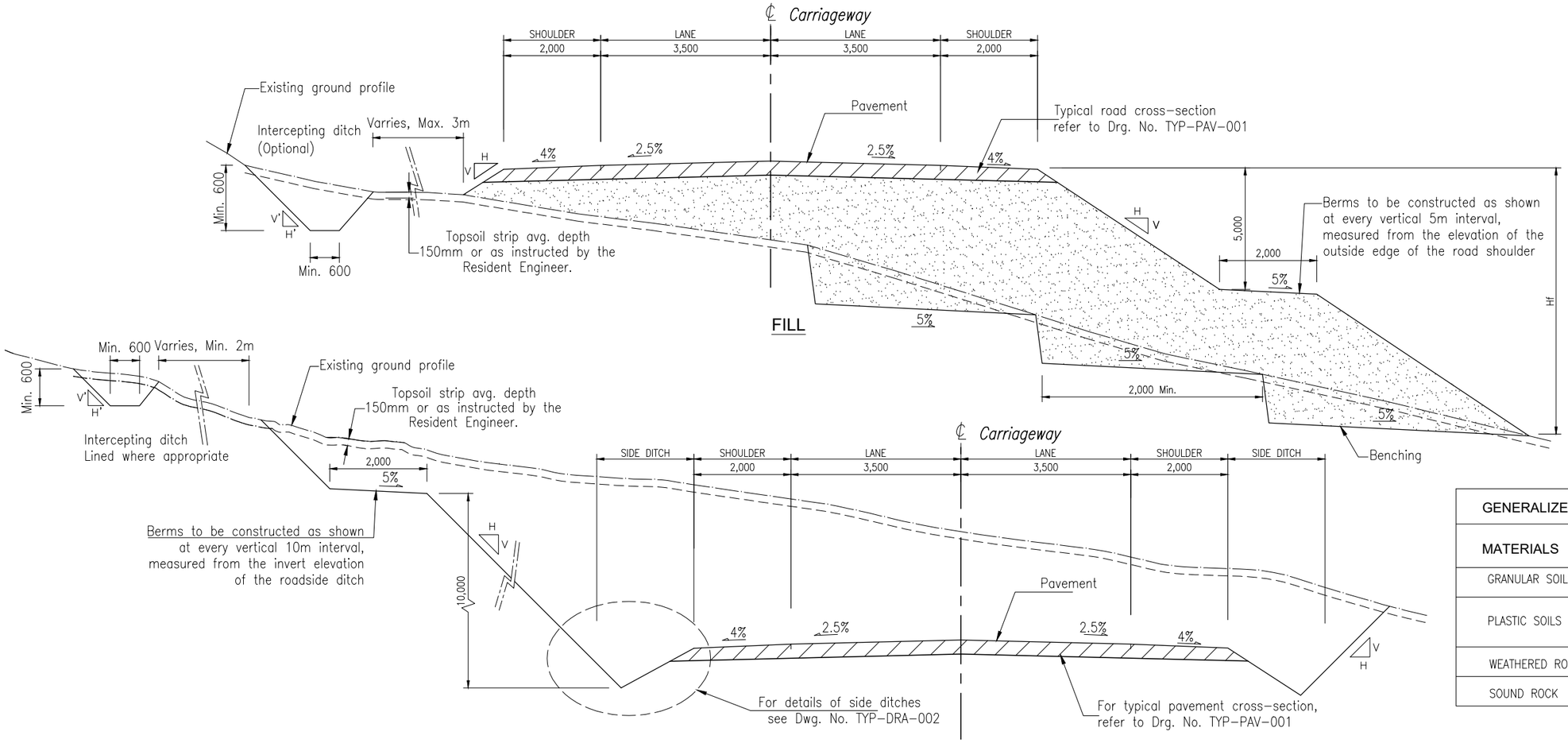

FILL

GENERALIZED FILL SLOPE RATIOS	
HEIGHT OF FILL (Hf)	FILL SLOPE (V / H)
0 m < Hf < 1 m	1 / 4
1 m < Hf < 3 m	1 / 2
Hf > 3 m	1 / 1.5

CUT

GENERALIZED CUT SLOPE RATIOS		
MATERIALS	DEPTH OF CUT (Hc)	CUT SLOPE (V / H)
GRANULAR SOILS	ANY Hc	1 / 2
PLASTIC SOILS	0 m < Hc < 4m	1.5 / 1
	Hc > 4m	1 / 1
WEATHERED ROCK		2 / 1 TO 4/1*
SOUND ROCK		5 / 1 TO 10/1*

* See note 1 below

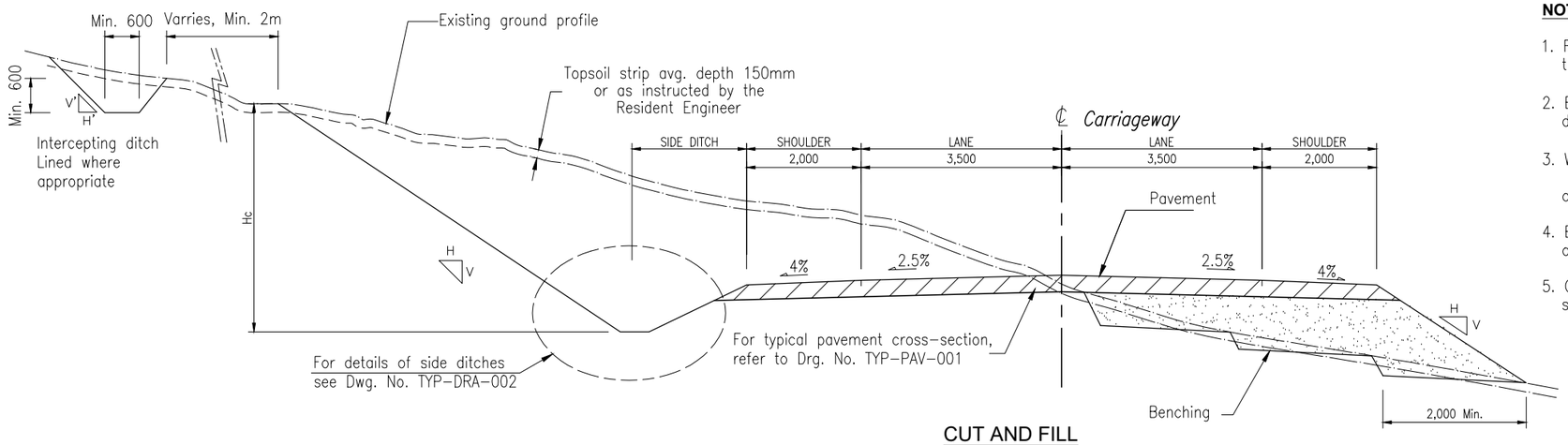

CUT AND FILL

NOTES ON GENERAL CUT & EMBANKMENT SLOPES:

1. Final slopes of cuts and embankments are subject to change by the Resident Engineer to suit site conditions.
2. Berms, 2.0 m wide minimum shall be provided (with 5% crossfall) where depth of cut slope exceeds 10m and where height of fill slope exceeds 5.0m.
3. Where Cut/Fill heights are marginally greater than 10m/5.0m respectively the Resident Engineer will instruct whether a berm is to be introduced, or alternatively that side slopes will be flattened locally at such sites.
4. Benching of existing ground to be constructed with minimum bench width of 2.0m where ground cross slope is 1 in 5 or greater.
5. Ground slopes flatter than 1 in 5 shall be terraced or stepped by deep scarification.

CLIENT:

KENYA NATIONAL HIGHWAY AUTHORITY
Barabara Plaza,
Off Airport South Road,
P. O. Box, 49712 - 00100,
NAIROBI.

KENYA URBAN ROADS AUTHORITY
Barabara Plaza,
Off Airport South Road,
P. O. Box, 49712 - 00100,
NAIROBI.

FINANCIER:

THE WORLD BANK

PROJECT:

HORN OF AFRICA GATEWAY DEVELOPMENT PROJECT (HOAGDP): -

Consultancy Services for the Design and Works Supervision for the Proposed Extension of Meru Bypass.

CONTRACT NO:

KeNHA/RD/CS/D/4205/2024

CONSULTANT:

One Padmore Place 6th Floor,
George Padmore Road,
P. O. Box, 76672 - 00508,
NAIROBI.

DESIGN DETAILS

Action	Name	Date
Designed By:	C.J	AUG 2025
Drawn By:	C.J	AUG 2025
Checked By:	S.I	AUG 2025
Approved By:	L.R	AUG 2025

DRAWING REVISIONS

No.	Revision Details	Reviewed	Initials	Date	Approved
		By			
		Checked			
		By			
		Checked			
		By			
		Checked			
		By			
		Checked			
		By			
		Checked			

DRAWING TITLE:

TYPICAL ROAD PRISM FOR CUT AND FILL SECTIONS

DRAWING SCALE:

AS SHOWN

DRAWING NO:

TYP-PAV-002

SUPERELEVATION DEVELOPMENT
CIRCULAR CURVE TRANSITION

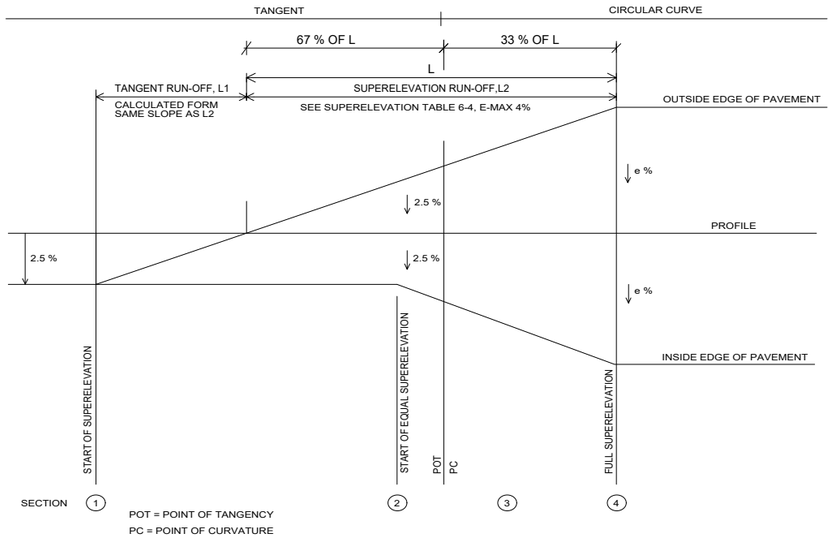

SUPERELEVATION PRINCEPLES
FOR SHOULDERS

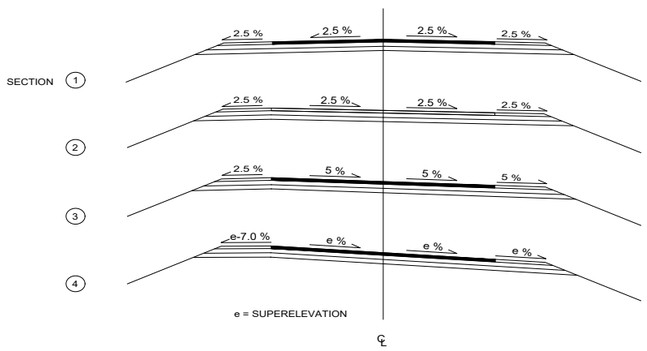

SPIRAL CURVE TRANSITION

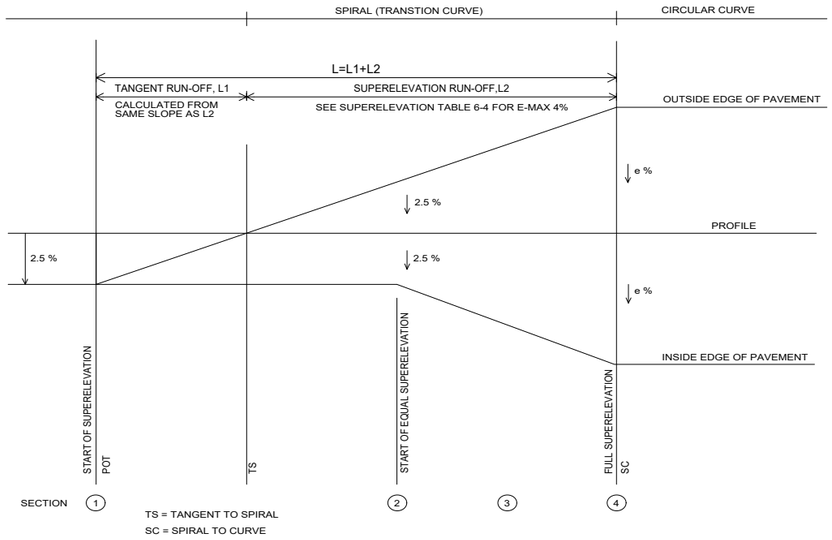

Table 5-8: Seper Elevation Rates and Length of Run -Off: 4%

	V=30Km/h		V=40Km/h		V=50Km/h		V=60Km/h		V=70Km/h		V=80Km/h		V=90Km/h		V=100Km/h	
	L(m)		L(m)		L(m)		L(m)		L(m)		L(m)		L(m)		L(m)	
R	e	2	e	2	e	2	e	2	e	2	e	2	e	2	e	2
(m)	(%)	Lns	(%)	Lns	(%)	Lns	(%)	Lns	(%)	Lns	(%)	Lns	(%)	Lns	(%)	Lns
5000	NC	0	NC	0	NC	0	NC	0	NC	0	NC	0	NC	0	NC	0
3000	NC	0	NC	0	NC	0	NC	0	NC	0	NC	0	NC	0	RC	16
2500	NC	0	NC	0	NC	0	NC	0	NC	0	NC	0	RC	15	RC	16
2000	NC	0	NC	0	NC	0	NC	0	NC	0	RC	14	RC	15	2.2	18
1500	NC	0	NC	0	NC	0	NC	0	RC	13	RC	14	2.3	18	2.6	21
1400	NC	0	NC	0	NC	0	NC	0	RC	13	2.1	15	2.4	18	2.7	22
1300	NC	0	NC	0	NC	0	NC	0	RC	13	2.2	16	2.5	19	2.8	23
1200	NC	0	NC	0	NC	0	RC	12	RC	13	2.3	17	2.6	20	2.9	24
1000	NC	0	NC	0	NC	0	RC	12	2.2	14	2.5	18	2.8	21	3.2	26
900	NC	0	NC	0	RC	11	RC	12	2.4	16	2.7	19	3	23	3.4	28
800	NC	0	NC	0	RC	11	2.1	13	2.5	16	2.8	20	3.2	25	3.5	29
700	NC	0	NC	0	RC	11	2.3	14	2.7	18	3	22	3.4	26	3.7	30
600	NC	0	RC	10	2.1	12	2.5	15	2.9	19	3.2	23	3.6	28	3.9	32
500	NC	0	RC	10	2.3	13	2.7	16	3.1	20	3.5	25	3.8	29	4	33
400	NC	0	2.1	11	2.5	14	3	18	3.4	22	3.7	27	4	31	Rmin=375	
300	RC	10	2.4	12	2.6	16	3.3	20	3.8	25	4	29	Rmin=375			
250	RC	10	2.6	13	3	17	3.6	22	3.9	26	Rmin=280					
200	2.3	11	2.8	14	3.3	18	3.8	23	Rmin=215							
175	2.4	12	2.9	15	3.5	19	3.9	23								
150	2.5	12	3.1	16	3.7	20	4	24								
140	2.6	12	3.2	16	3.8	21	Rmin=150									
130	2.6	12	3.3	17	3.8	21										
120	2.7	13	3.4	17	3.9	22										
110	2.8	13	3.5	18	4	22										
100	2.9	14	3.6	19	4	22										
90	3	14	3.7	19	Rmin=100											
80	3.2	15	3.8	20												
70	3.3	16	3.9	20												
60	3.5	17	4	21												
50	3.7	18	Rmin=50													
40	3.9	19														
30	Rmin=35															

emax = 4%
R= Rdius of curve
Vd = Aassumed Design Speed
e = Rate of Super Elevation
L = Minimum Length of Run Off (Does not include tungent runout
NC = Normal crown section
RC = Remove adverse crown, superelevate at normal crown slope
Use of emax = 4% should be limited to urban conditions

CLIENT:

KENYA NATIONAL HIGHWAY AUTHORITY
Barabara Plaza,
Off Airport South Road,
P. O. Box, 49712 - 00100,
NAIROBI.

KENYA URBAN ROADS AUTHORITY
Barabara Plaza,
Off Airport South Road,
P. O. Box, 49712 - 00100,
NAIROBI.

FINANCIER: THE WORLD BANK

PROJECT:
HORN OF AFRICA GATEWAY DEVELOPMENT PROJECT (HOAGDP): -

Consultancy Services for the Design and Works Supervision for the Proposed Extension of Meru Bypass.

CONTRACT NO:
KeNHA/RD/CS/D/4205/2024

CONSULTANT:
egis
One Padmore Place 6th Floor,
George Padmore Road,
P. O. Box, 76672 - 00508,
NAIROBI.

DESIGN DETAILS

Action	Name	Date
Designed By:	C.J	APRIL 2025
Drawn By:	C.J	APRIL 2025
Checked By:	S.I	APRIL 2025
Approved By:	L.R	APRIL 2025

DRAWING REVISIONS

No.	Revision Details	Reviewed	Initials	Date	Approved
		By			
		Checked			
		By			
		Checked			
		By			
		Checked			
		By			
		Checked			
		By			
		Checked			

DRAWING TITLE:
CURVE DEFINATION

DRAWING SCALE:
AS SHOWN

DRAWING NO:
TYP - ALG - 001
1 of 3

GENERAL NOTES:

1. THE DESIGN IS PREPARED USING THE METRIC SYSTEM
2. ANGLES ARE MEASURED IN DEGREES (CIRCLE DIVIDED IN 360)
3. ALL COORDINATES ARE IN METRES AND RELATED TO THE NATIONAL UTM GRID ZONE 36 N, ARC1960

ABBREVIATIONS:

N.T.S.	NOT TO SCALE
O.G.L.	ORIGINAL GROUND LEVEL
N.A.	NOT APPLICABLE
LHS	LEFT HAND SIDE
RHS	RIGHT HAND SIDE
CULV	CULVERT
CMP	CORRUGATED METAL PIPE
BC	BOX CULVERT
CP	CONCRETE PIPE
BR	BRIDGE
CMA	CORRUGATED METAL ARCH

St	STATION
GR	GUARDRAIL
A	CLOTHOID PARAMETER

CT	CURVE TO TANGENT POINT
TC	TANGENT TO CURVE POINT
L	LENGTH OF CURVE
R	RADIUS OF CURVE RADIUS

Lc	LENGTH OF SPIRAL CURVE
Ls	LENGTH OF SPIRAL CURVE
PT	POINT OF TANGENCY

TS	TANGENT TO SPIRAL POINT
SC	SPIRAL TO CURVE POINT
CS	CURVE TO SPIRAL POINT
ST	SPIRAL TO TANGENT POINT
Xs	TOTAL DISTANCE AT SC FROM TS
Ys	OFFSET DISTANCE AT SC FROM TS
p	THE OFFSET OF INITIAL TANGENT IN

e	RATE OF SUPERELEVATION (m / m)
K	K-VALUE = VERTICAL CURVE LENGTH / ALGEBRAIC DIFF. IN GRADIENT
g	GRADIENT (%)
PVI	POINT OF INTERSECTION OF VERTICAL CURVE
Ht	HEIGHT ABOVE SEA LEVEL
Lvc	LENGTH OF VERTICAL CURVE
Δg	ALGEBRIC DIFFERENCES IN GRADIENTS
Bvc	BEIGINING OF VERTICAL CURVE
Evc	END OF VERTICAL CURVE
x	HORIZONTAL LENGHTH IN PLAN
Y	TANGENT OFFSET (VERTICAL)

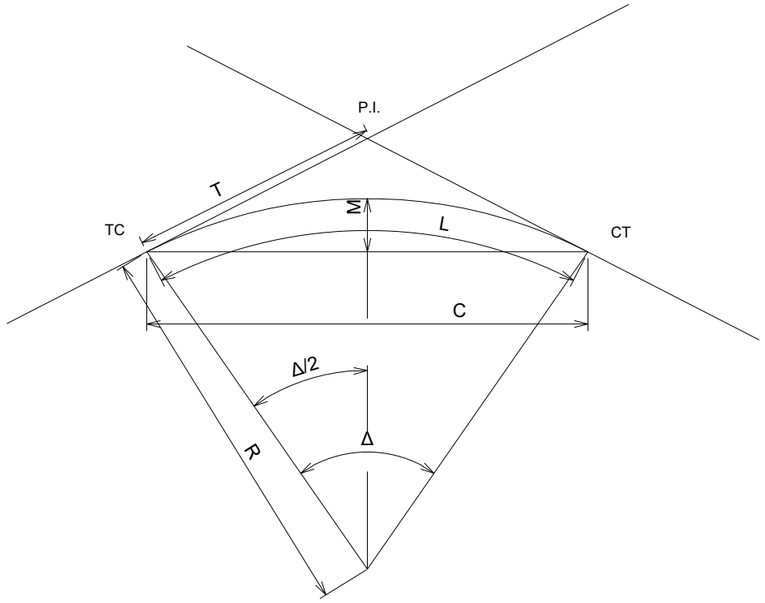

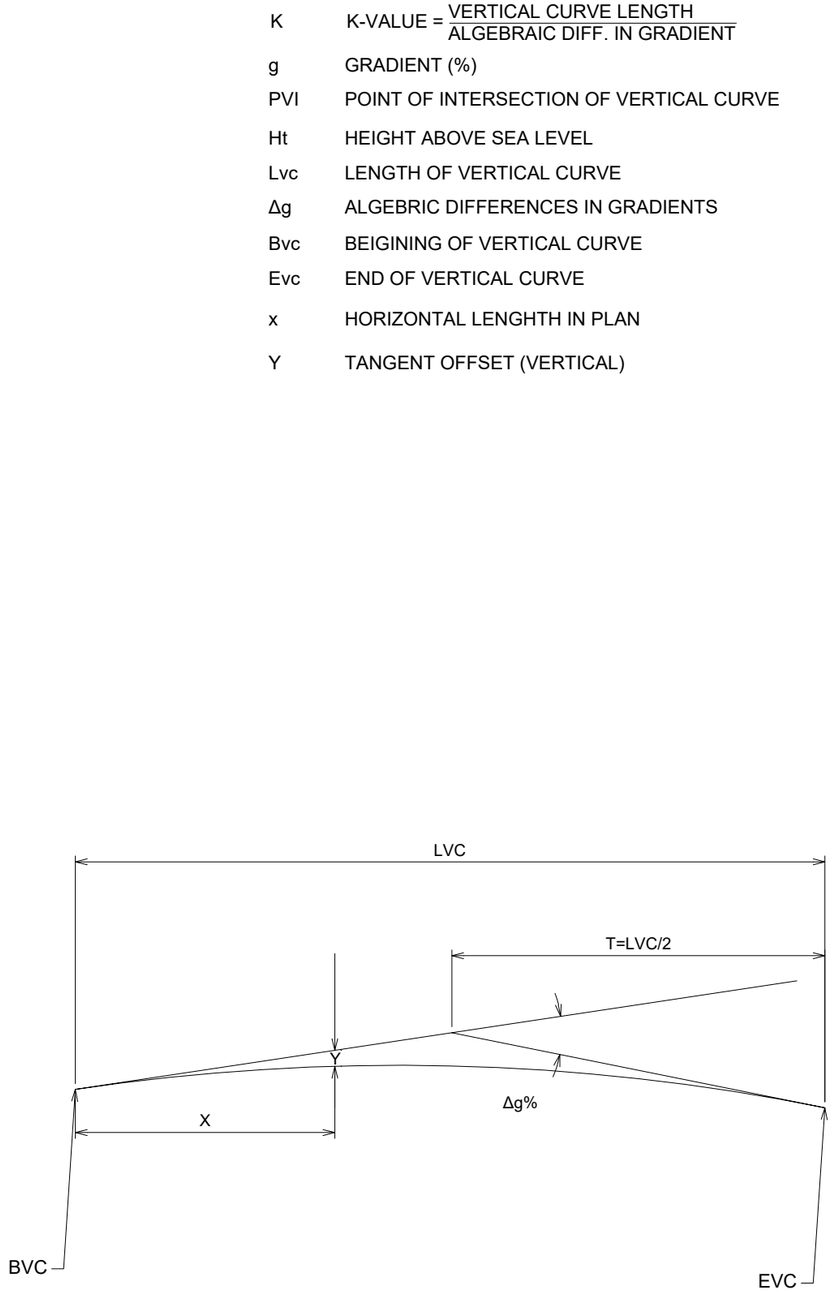

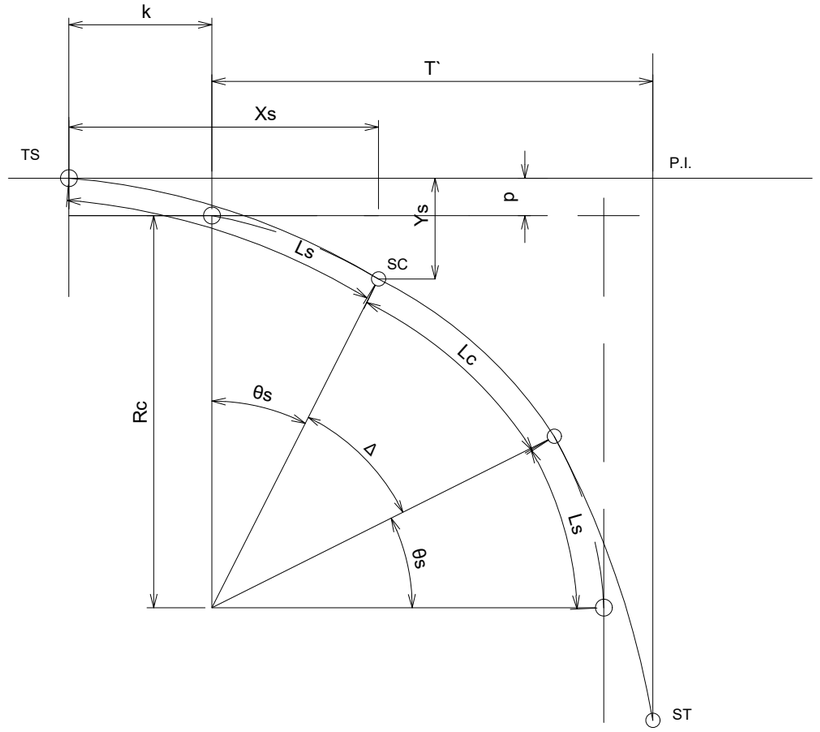

CLIENT:
KENYA NATIONAL HIGHWAY AUTHORITY
Barabara Plaza,
Off Airport South Road,
P. O. Box, 49712 - 00100,
NAIROBI.

KENYA URBAN ROADS AUTHORITY
Barabara Plaza,
Off Airport South Road,
P. O. Box, 49712 - 00100,
NAIROBI.

FINANCIER: THE WORLD BANK

PROJECT:
HORN OF AFRICA GATEWAY DEVELOPMENT PROJECT (HOAGDP): -

Consultancy Services for the Design and Works Supervision for the Proposed Extension of Meru Bypass.

CONTRACT NO:
KeNHA/RD/CS/D/4205/2024

CONSULTANT:
One Padmore Place 6th Floor,
George Padmore Road,
P. O. Box, 76672 - 00508,
NAIROBI.

DESIGN DETAILS

Action	Name	Date
Designed By:	C.J	AUG 2025
Drawn By:	C.J	AUG 2025
Checked By:	S.I	AUG 2025
Approved By:	L.R	AUG 2025

DRAWING REVISIONS

No.	Revision Details	Reviewed	Initials	Date	Approved
		By			
		Checked			
		By			
		Checked			
		By			
		Checked			
		By			
		Checked			
		By			
		Checked			

DRAWING TITLE:
CURVE DEFINATION

DRAWING SCALE:
AS SHOWN

DRAWING NO:
TYP - ALG - 001
2 of 3

Fill Widening	
Height of Fill (m)	**Widening (m)**
0.0 – 3.0	-
3.0 – 6.0	0.6
Over 6.0	0.9

EMBANKMENT WIDENING PRINCIPLE

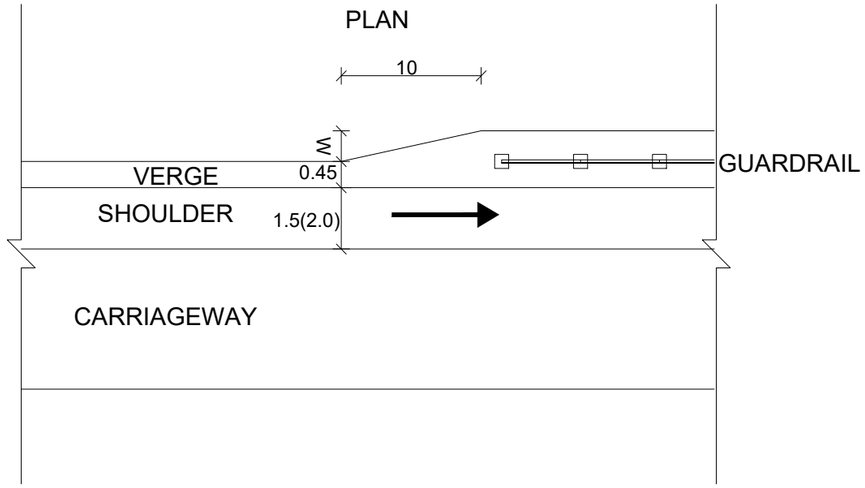

Radius of Curve R (m)	Curve Widening (W)	
	Single lane	Two lane
20 – 40	0.6	1.5
41 - 60	0.6	1.2
61 - 120	0	0.9
121 - 250	0	0.6
>250	0	0

CURVE WIDENING PRINCIPLE

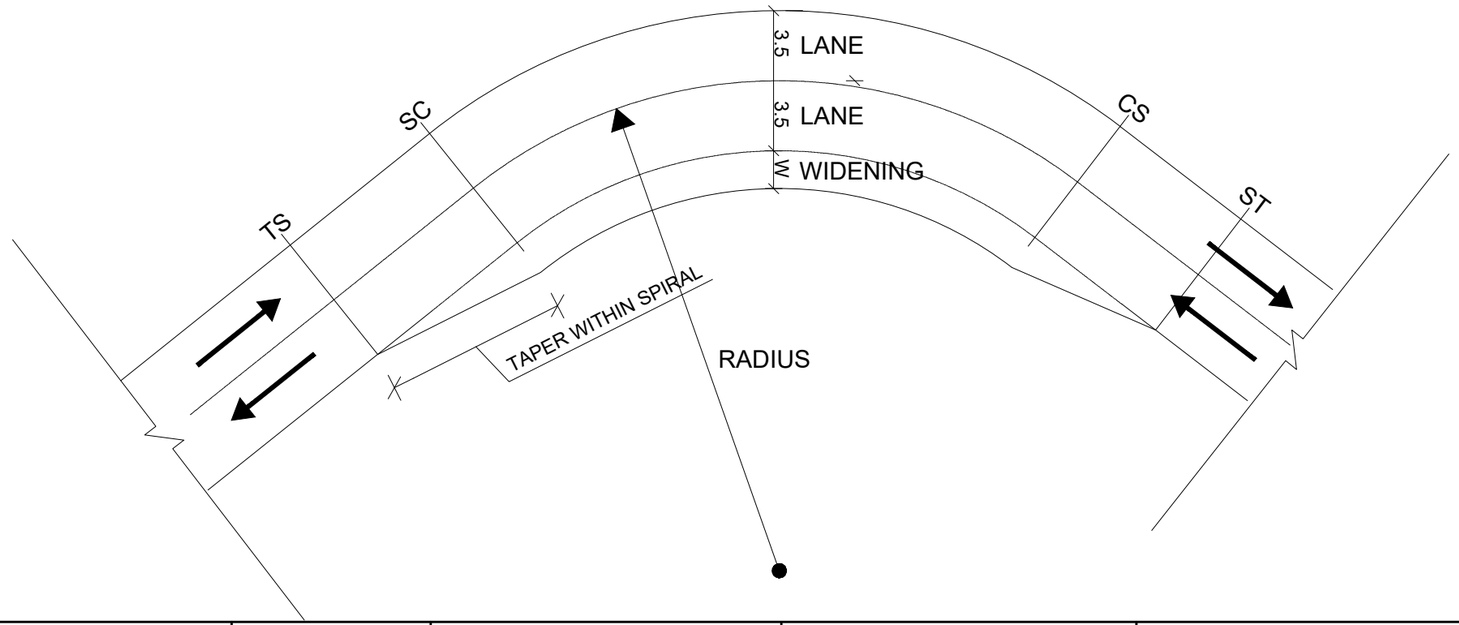

CLIENT:

KENYA NATIONAL HIGHWAY AUTHORITY
Barabara Plaza,
Off Airport South Road,
P. O. Box, 49712 - 00100,
NAIROBI.

KENYA URBAN ROADS AUTHORITY
Barabara Plaza,
Off Airport South Road,
P. O. Box, 49712 - 00100,
NAIROBI.

FINANCIER:

THE WORLD BANK

PROJECT:

HORN OF AFRICA GATEWAY DEVELOPMENT PROJECT (HOAGDP): -

Consultancy Services for the Design and Works Supervision for the Proposed Extension of Meru Bypass.

CONTRACT NO:

KeNHA/RD/CS/D/4205/2024

CONSULTANT:

egis

One Padmore Place 6th Floor,
George Padmore Road,
P. O. Box, 76672 - 00508,
NAIROBI.

DESIGN DETAILS

Action	Name	Date
Designed By:	C.J	AUG 2025
Drawn By:	C.J	AUG 2025
Checked By:	S.I	AUG 2025
Approved By:	L.R	AUG 2025

DRAWING REVISIONS

No.	Revision Details	Reviewed	Initials	Date	Approved
		By			
		Checked			
		By			
		Checked			
		By			
		Checked			
		By			
		Checked			
		By			
		Checked			

DRAWING TITLE:

CURVE DEFINATION

DRAWING SCALE:

AS SHOWN

DRAWING NO:

TYP - ALG - 001
3 of 3

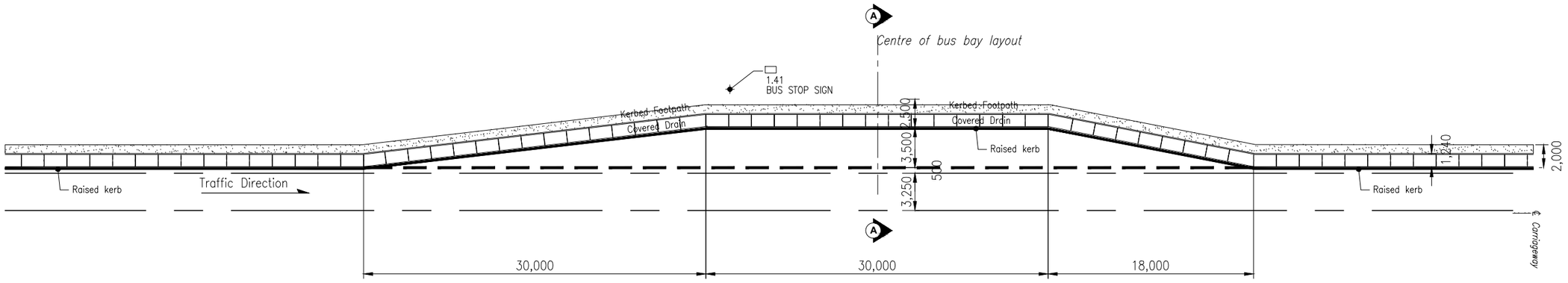

URBAN BUS BAY (TYPE1)
SCALE 1 :200 A1

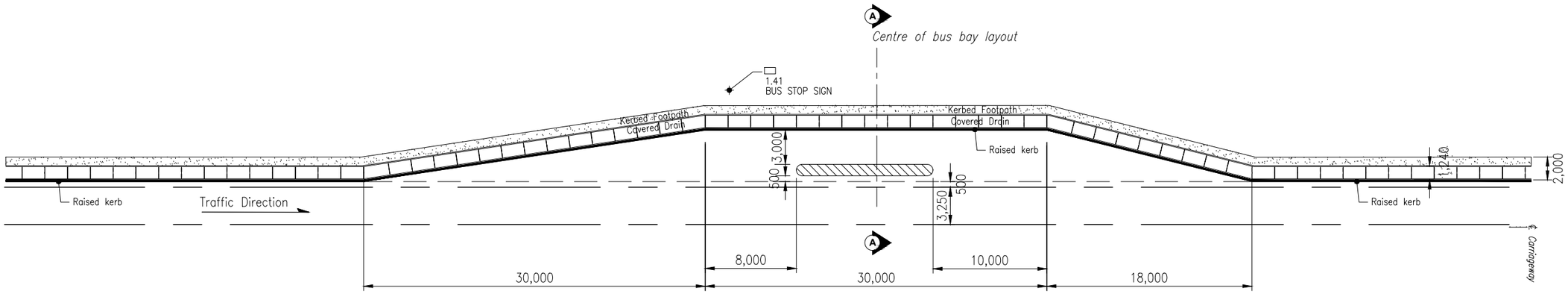

URBAN BUS BAY (TYPE 2)
SCALE 1 :200 A1

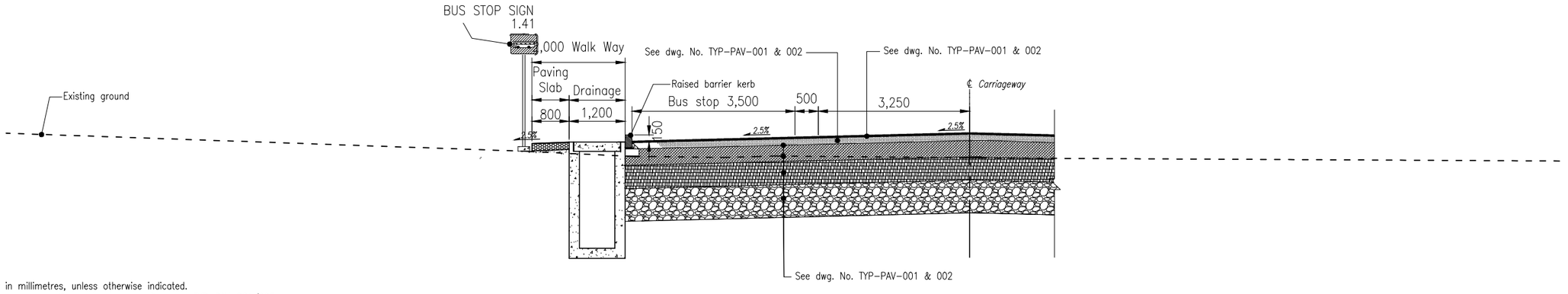

TYPICAL CROSS - SECTION THROUGH URBAN BUS BAY (SECTION A-A)
SCALE 1 :25 A1

General Notes:

;1). All dimensions are in millimetres, unless otherwise indicated.
2). For typical pavement cross section and notes, see Dwg. no. TYP–PAV–001/002
3). The same bus stop layout to be also used for minor urban centres, with modified central length as shown, or as directed by the Resident Engineer.
4). Chainages indicated refer to centre of Bus bay layout.

CLIENT:

Kenya National Highways Authority
Quality Highways, Better Connections

KENYA NATIONAL HIGHWAY AUTHORITY
Barabara Plaza,
Off Airport South Road,
P. O. Box, 49712 - 00100,
NAIROBI.

KENYA URBAN ROADS AUTHORITY
Barabara Plaza,
Off Airport South Road,
P. O. Box, 49712 - 00100,
NAIROBI.

FINANCIER:

THE WORLD BANK

PROJECT:

HORN OF AFRICA GATEWAY DEVELOPMENT PROJECT (HOAGDP): -

Consultancy Services for the Design and Works Supervision for the Proposed Extension of Meru Bypass.

CONTRACT NO:

KeNHA/RD/CS/D/4205/2024

CONSULTANT:

egis

One Padmore Place 6th Floor,
George Padmore Road,
P. O. Box, 76672 - 00508,
NAIROBI.

DESIGN DETAILS

Action	Name	Date
Designed By:	C.J	AUG 2025
Drawn By:	C.J	AUG 2025
Checked By:	S.I	AUG 2025
Approved By:	L.R	AUG 2025

DRAWING REVISIONS

No.	Revision Details	Reviewed	Initials	Date	Approved
		By			
		Checked			
		By			
		Checked			
		By			
		Checked			
		By			
		Checked			
		By			
		Checked			

DRAWING TITLE:
URBAN BUS BAYS

DRAWING SCALE:
AS SHOWN

DRAWING NO:
TYP - ALG - 002

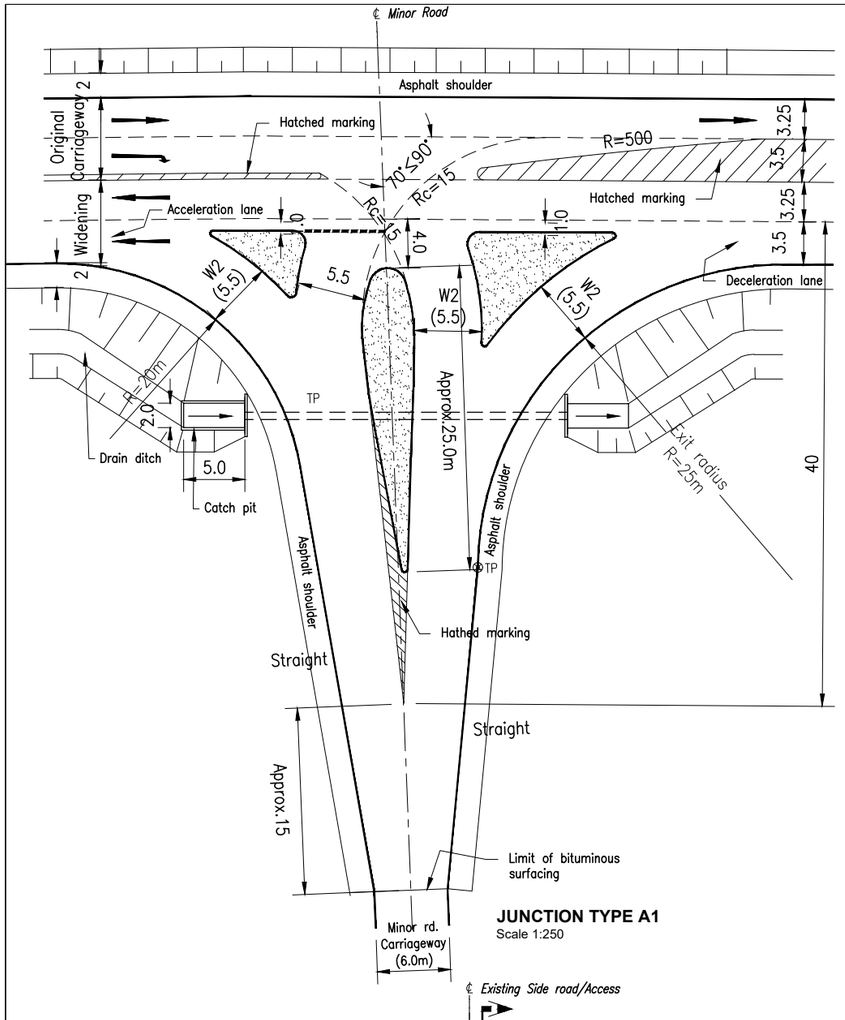

JUNCTION TYPE A1
Scale 1:250

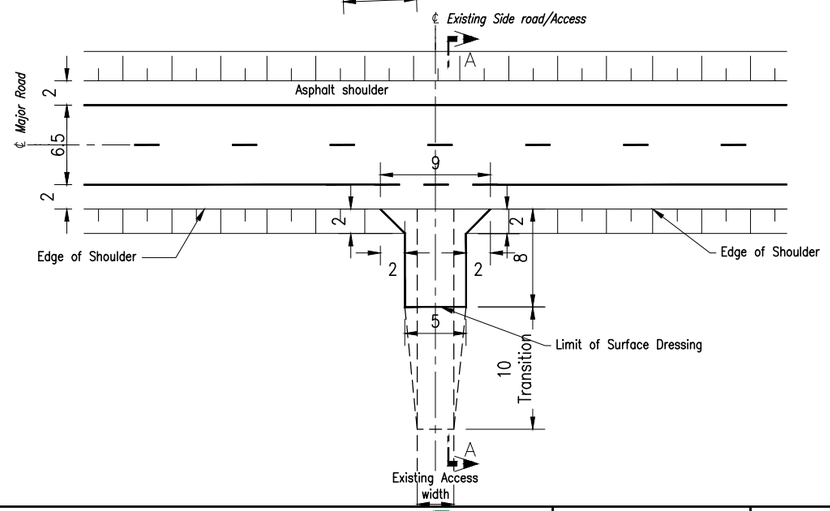

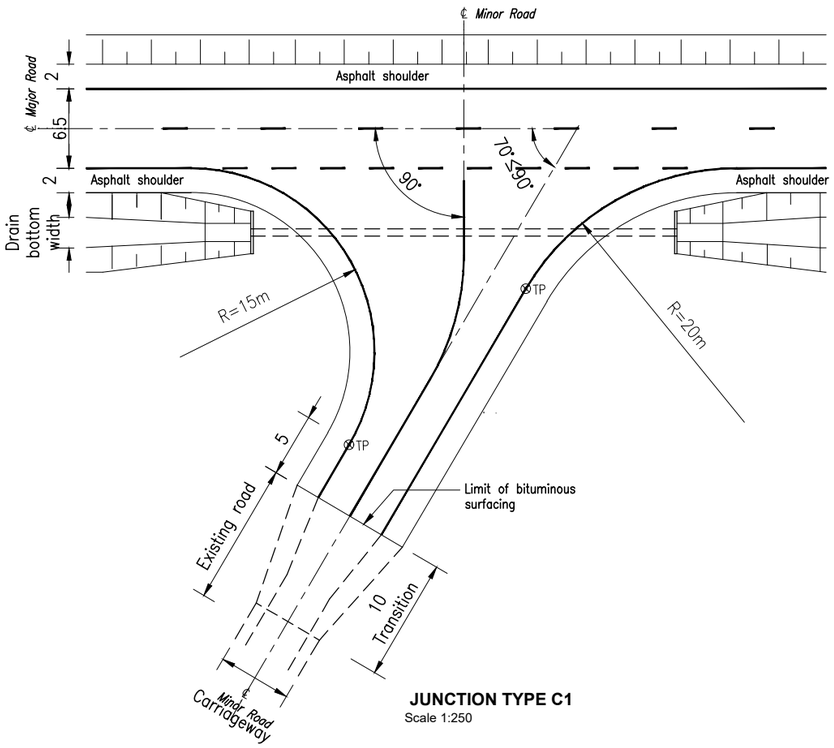

JUNCTION TYPE C1
Scale 1:250

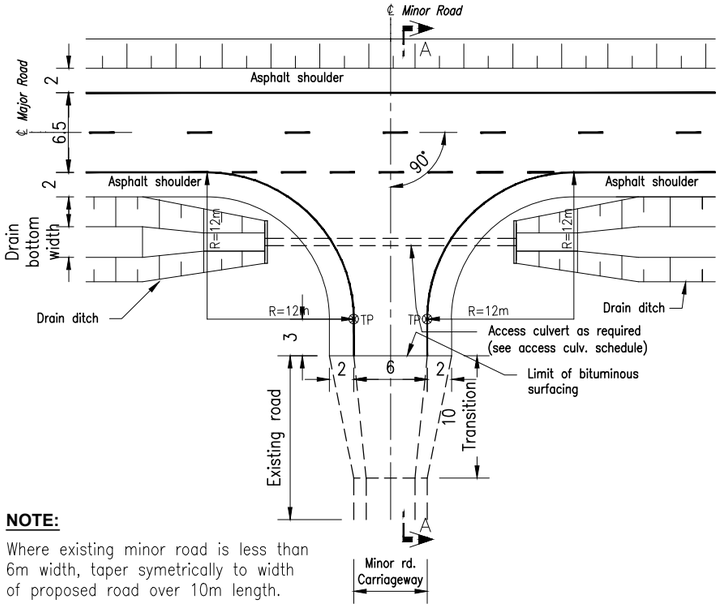

NOTE:

Where existing minor road is less than 6m width, taper symetrically to width of proposed road over 10m length.

JUNCTION TYPE C2
Scale 1:250

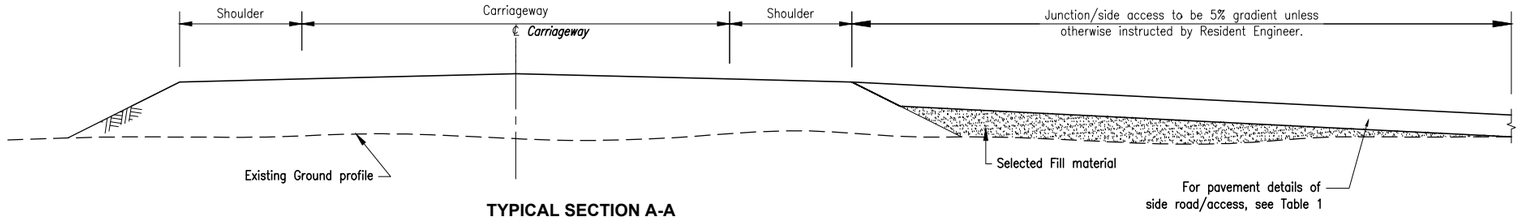

TYPICAL SECTION A-A
Scale 1:50

TABLE 1

JUNCTION / ACCESS TYPE	PAVEMENT STRUCTURE
A1	As main carriageway adjacent
C1 & C2	As main carriageway adjacent
D	As main carriageway adjacent

GENERAL NOTES:

1. Dimensions are in metres.
2. For road marking details at junctions/accesses, see Dwg. no. TYP-SIG-002.
3. For standard road marking Line Type details, see Dwg. no. TYP-ALG-006.
4. For road sign face layout details, see Dwg. nos. TYP-SIG-005 & 006
5. For sign board support and mounting details, see Dwg no. TYP-SIG-003.
6. length between existing side road/ access and proposed road may be amended by Resident Engineer to suit site conditions.
7. Depth of catch pit varies (min.=0.5m). Size may be varied by the R.E to suit site conditions .

CLIENT:
Kenya National Highways Authority
KENYA NATIONAL HIGHWAY AUTHORITY
Barabara Plaza,
Off Airport South Road,
P. O. Box, 49712 - 00100,
NAIROBI.

KENYA URBAN ROADS AUTHORITY
Barabara Plaza,
Off Airport South Road,
P. O. Box, 49712 - 00100,
NAIROBI.

FINANCIER:
THE WORLD BANK

PROJECT:
HORN OF AFRICA GATEWAY DEVELOPMENT PROJECT (HOAGDP): -

Consultancy Services for the Design and Works Supervision for the Proposed Extension of Meru Bypass.

CONTRACT NO:
KeNHA/RD/CS/D/4205/2024

CONSULTANT:
egis
One Padmore Place 6th Floor,
George Padmore Road,
P. O. Box, 76672 - 00508,
NAIROBI.

DESIGN DETAILS

Action	Name	Date
Designed By:	C.J	AUG 2025
Drawn By:	C.J	AUG 2025
Checked By:	S.I	AUG 2025
Approved By:	L.R	AUG 2025

DRAWING REVISIONS

No.	Revision Details	Reviewed	Initials	Date	Approved
		By			
		Checked			
		By			
		Checked			
		By			
		Checked			
		By			
		Checked			
		By			
		Checked			

DRAWING TITLE:
LAYOUT OF ROAD JUNCTIONS AND ACCESS TYPES.
(1 of 2)

DRAWING SCALE:
AS SHOWN

DRAWING NO:
TYP - ALG - 003

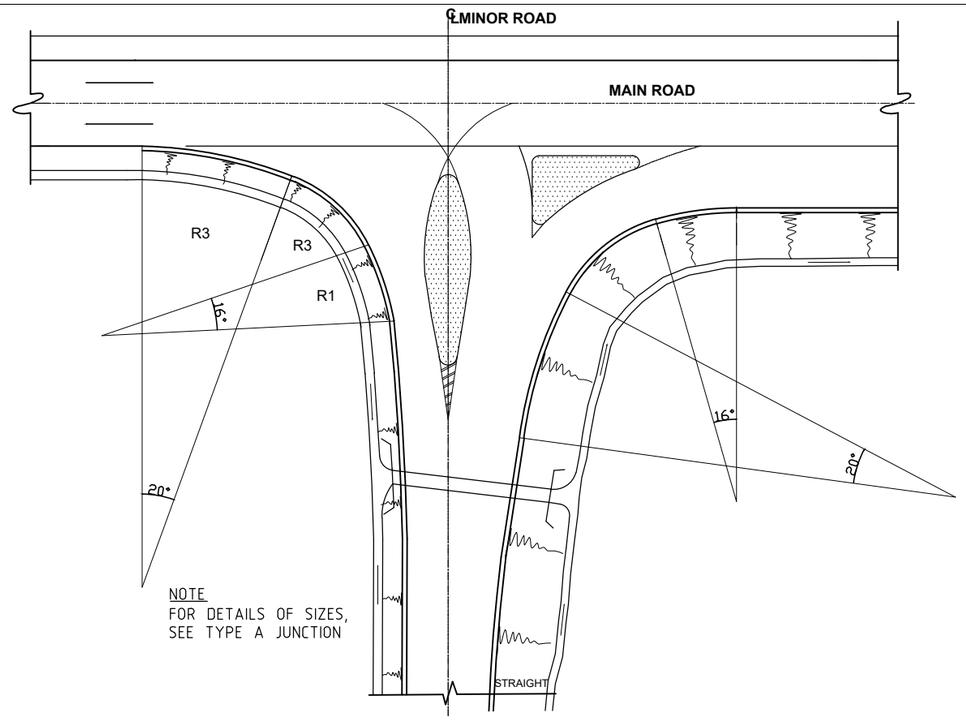

JUNCTION TYPE B
SCALE 1:250

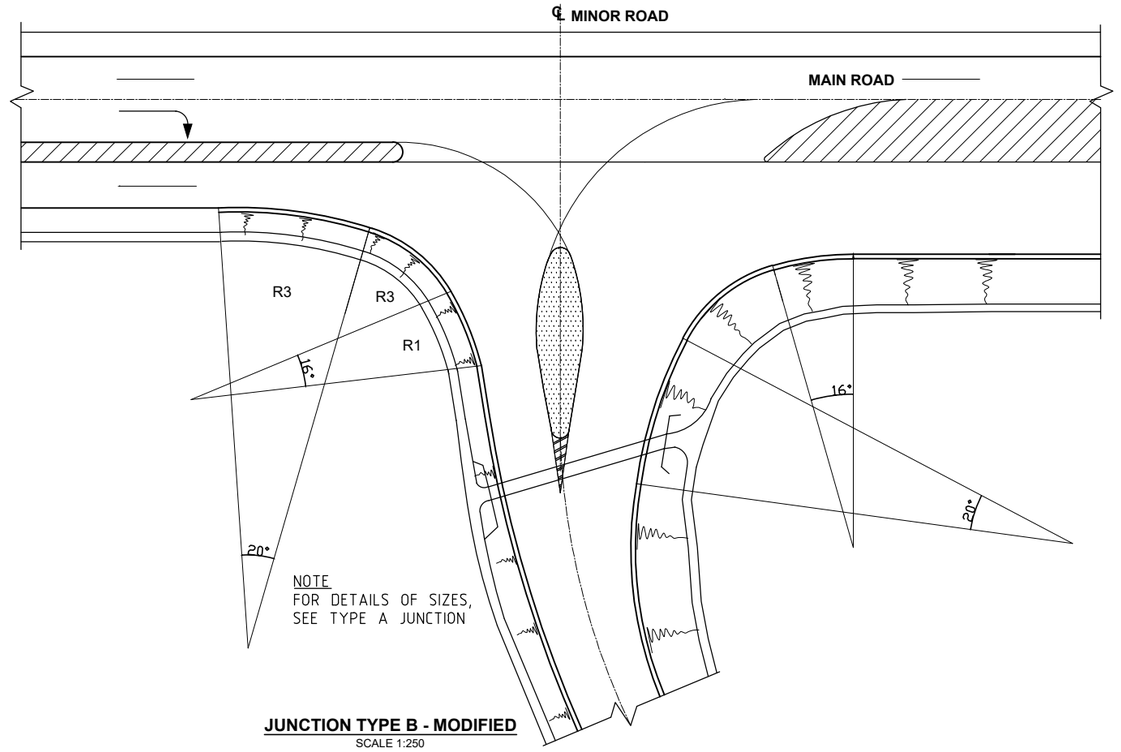

JUNCTION TYPE B - MODIFIED
SCALE 1:250

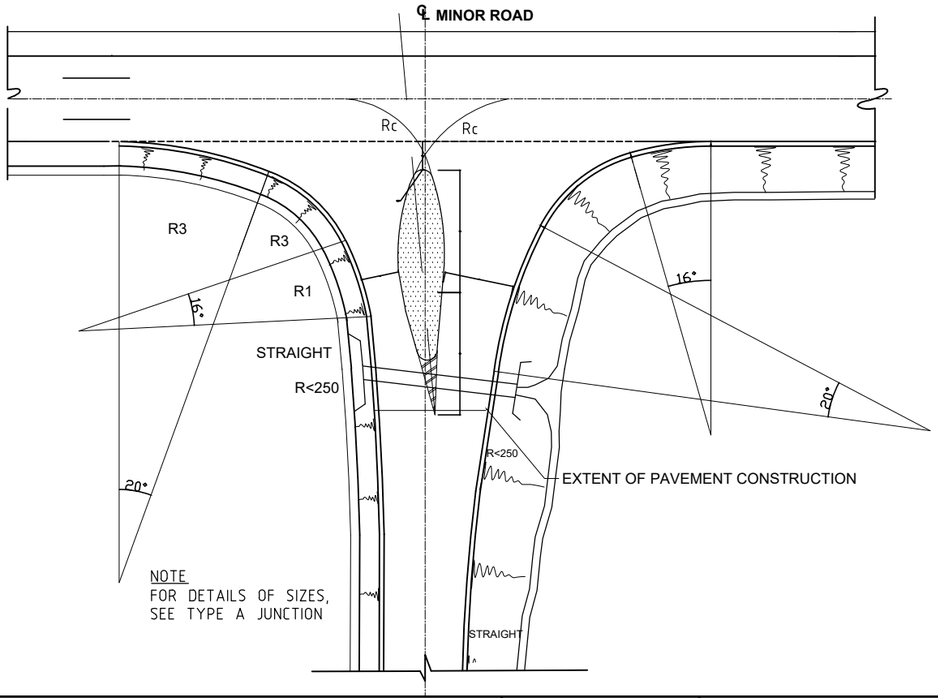

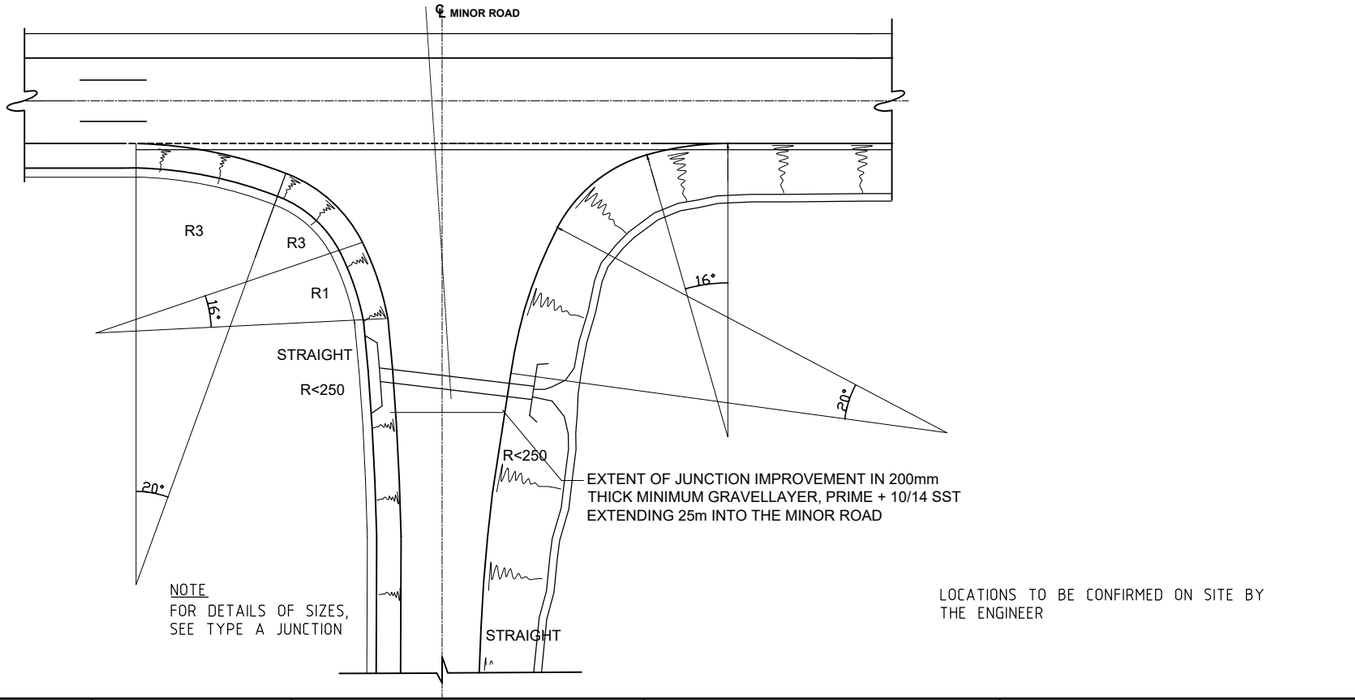

LOCATIONS TO BE CONFIRMED ON SITE BY
THE ENGINEER

CLIENT:

KENYA NATIONAL HIGHWAY AUTHORITY
Barabara Plaza,
Off Airport South Road,
P. O. Box, 49712 - 00100,
NAIROBI.

KENYA URBAN ROADS AUTHORITY
Barabara Plaza,
Off Airport South Road,
P. O. Box, 49712 - 00100,
NAIROBI.

FINANCIER:

THE WORLD BANK

PROJECT:

HORN OF AFRICA GATEWAY DEVELOPMENT PROJECT (HOAGDP): -

Consultancy Services for the Design and Works Supervision for the Proposed Extension of Meru Bypass.

CONTRACT NO:

KeNHA/RD/CS/D/4205/2024

CONSULTANT:

egis

One Padmore Place 6th Floor,
George Padmore Road,
P. O. Box, 76672 - 00508,
NAIROBI.

DESIGN DETAILS		
Action	Name	Date
Designed By:	C.J	AUG 2025
Drawn By:	C.J	AUG 2025
Checked By:	S.I	AUG 2025
Approved By:	L.R	AUG 2025

DRAWING REVISIONS						
No.	Revision Details	Reviewed	Initials	Date	Approved
		By			
		Checked			
		By			
		Checked			
		By			
		Checked			
		By			
		Checked			
		By			
		Checked			

DRAWING TITLE:

LAYOUT OF ROAD JUNCTIONS AND ACCESS TYPES.
(2 of 2)

DRAWING SCALE:

AS SHOWN

DRAWING NO:

TYP - ALG - 003

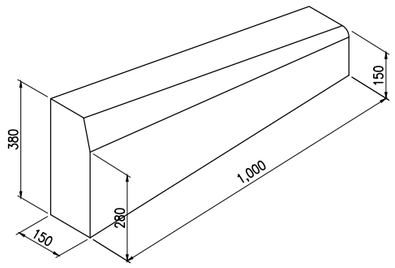

LEFT HAND DROPPER KERB.

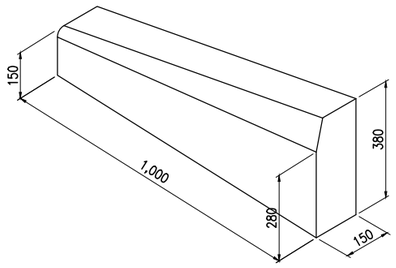

RIGHT HAND DROPPER KERB.

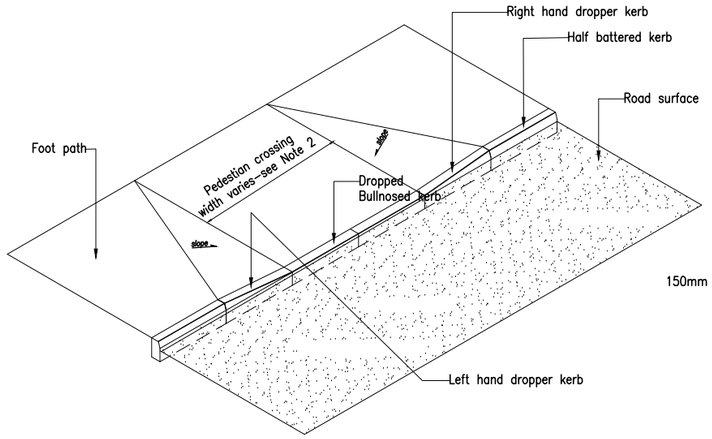

DROPPER KERB DETAIL AT PEDESTRIAN FOOTWAY CROSSING.
- Isometric view

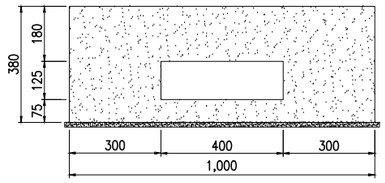

KERB INLET (ELEVATION)

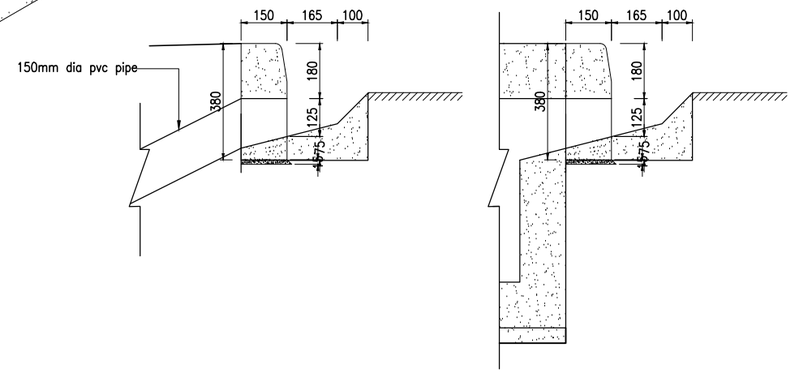

KERB INLET (SECTION)

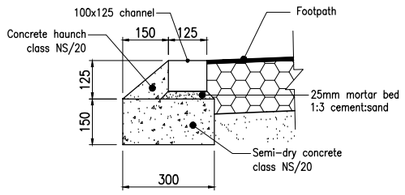

TYPICAL BEDDING AND BACKING DETAIL FOR CHANNELBLOCK (OUTER EDGE OF FOOTPATH)

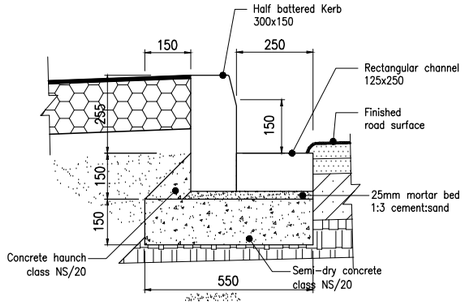

TYPICAL BEDDING AND BACKING DETAIL FOR KERB - ONE SIDE RAISED FOOTPATH/VERGE

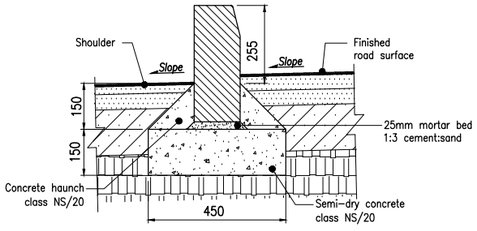

TYPICAL BEDDING AND BACKING DETAIL FOR KERB AT RURAL BUS STOP

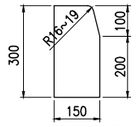

HALF BATTERED KERB



BULL-NOSED KERB

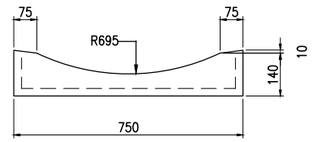

Section

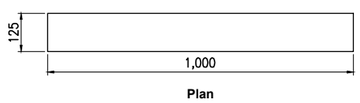

Plan **Section**

SQUARE CHANNEL

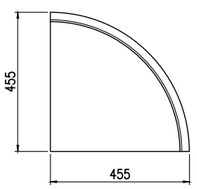

Plan

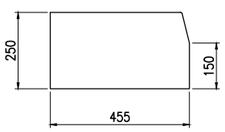

Section

QUADRANT KERB.

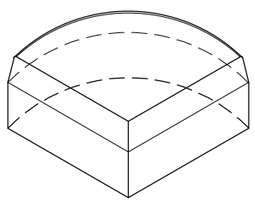

Isometric view

Notes:

(1). Dimensions are in millimetres, unless otherwise indicated.

(2). Width of dropped kerbing at pedestrian footway crossing points to be as per schedule, or as otherwise determined by the Resident Engineer.

(3). At dropped kerb position, upstand shall be 50mm above carriageway surface.

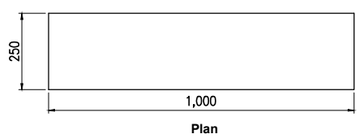

Plan **Section**

RECTANGULAR CHANNEL

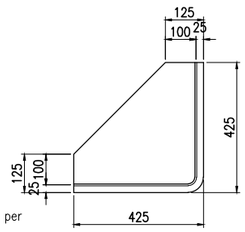

Plan

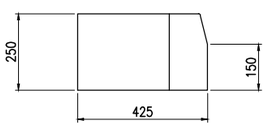

Section

QUADRANT KERB FOR PARKING BAYS.

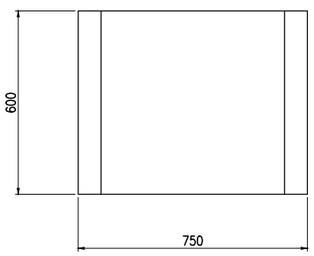

Plan

DISHED CHANNEL

CLIENT:

KENYA NATIONAL HIGHWAY AUTHORITY
Barabara Plaza,
Off Airport South Road,
P. O. Box, 49712 - 00100,
NAIROBI.

KENYA URBAN ROADS AUTHORITY
Barabara Plaza,
Off Airport South Road,
P. O. Box, 49712 - 00100,
NAIROBI.

FINANCIER:

THE WORLD BANK

PROJECT:

HORN OF AFRICA GATEWAY DEVELOPMENT PROJECT (HOAGDP): -

Consultancy Services for the Design and Works Supervision for the Proposed Extension of Meru Bypass.

CONTRACT NO:

KeNHA/RD/CS/D/4205/2024

CONSULTANT:

egis

One Padmore Place 6th Floor,
George Padmore Road,
P. O. Box, 76672 - 00508,
NAIROBI.

DESIGN DETAILS

Action	Name	Date
Designed By:	C.J	NOV 2024
Drawn By:	C.J	NOV 2024
Checked By:	S.I	NOV 2024
Approved By:	L.R	NOV 2024

DRAWING REVISIONS

No.	Revision Details	Reviewed	Initials	Date	Approved
		By			
		Checked			
		By			
		Checked			
		By			
		Checked			
		By			
		Checked			
		By			
		Checked			

DRAWING TITLE:

KERBS AND CHANNELS

DRAWING SCALE:

AS SHOWN

DRAWING NO:

TYP - ALG - 004

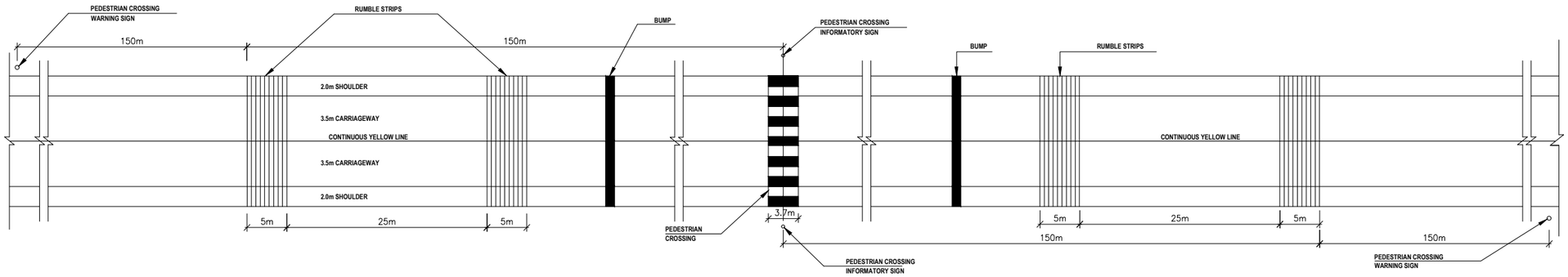

LAYOUT PLAN : RAISED PEDESTRIAN CROSSING

SCALE 1:150

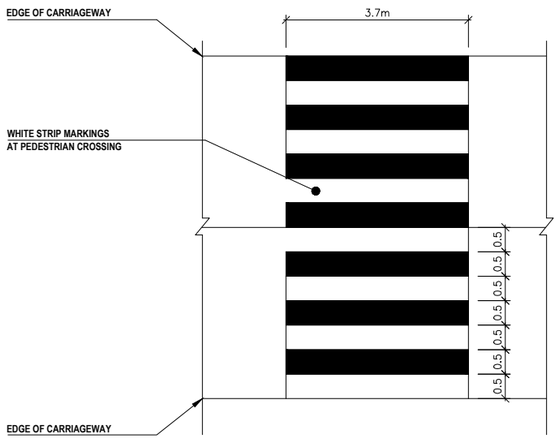

ROAD MARKING FOR PEDESTRIAN CROSSING

SCALE 1:20

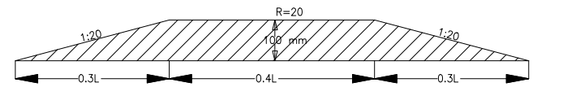

Seminole Profile

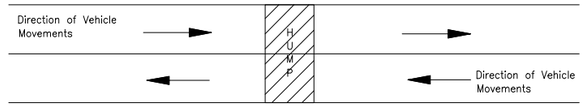

When	Middle	Slope	Respective Speed
L=	0.4xL	0.3xL	
5m=	2.0m	2.0m	50kph
4m=	1.6m	1.6m	40kph
3m=	1.2m	1.2m	30kph

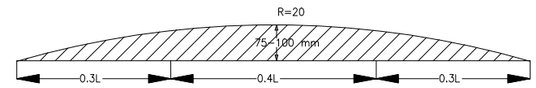

Watts Profile

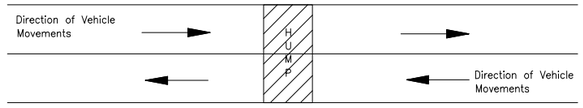

When	Middle	Slope	Respective Speed
L=	0.4xL	0.3xL	
5m=	1.6m	1.2m	30kph
4m=	1.2m	0.9m	25kph
3m=	0.8m	0.6m	20kph

BUMP CROSSING DETAILS

SCALE 1:5

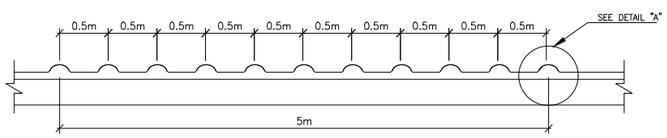

RUMBLE STRIPS

SCALE 1:25

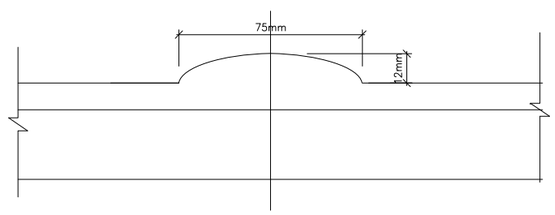

DETAIL "A" : RUMBLE STRIP

NOTES:

1. **ALL UNITS ARE IN METRES UNLESS STATED OTHERWISE.**
2. BUMP CROSSING TO BE CONSTRUCTED USING ASPHALT CONCRETE OR COLD PREMIX.
3. PEDESTRIAN CROSSING MARKINGS TO BE 0.5m WIDE STRIPS, 3.7m LONG AS SHOWN.
4. PEDESTRIAN CROSSING WARNING SIGNS SHALL BE INSTALLED 50 – 100m IN ADVANCE OF THE CROSSING AND INFORMATORY SIGN SHALL BE INSTALLED AT THE CROSSING ON EITHER SIDE.
5. TWO SETS OF RUMBLE STRIPS SHALL BE CONSTRUCTED ON EITHER SIDE OF THE RAISED CROSSING.
6. APPROPRIATE LOCATION FOR PEDESTRIAN CROSSING TO BE DETERMINED

CLIENT:

KENYA NATIONAL HIGHWAY AUTHORITY
Barabara Plaza,
Off Airport South Road,
P. O. Box, 49712 - 00100,
NAIROBI.

KENYA URBAN ROADS AUTHORITY
Barabara Plaza,
Off Airport South Road,
P. O. Box, 49712 - 00100,
NAIROBI.

FINANCIER:

THE WORLD BANK

PROJECT:

HORN OF AFRICA GATEWAY DEVELOPMENT PROJECT (HOAGDP): -

Consultancy Services for the Design and Works Supervision for the Proposed Extension of Meru Bypass.

CONTRACT NO:

KeNHA/RD/CS/D/4205/2024

CONSULTANT:

egis

One Padmore Place 6th Floor,
George Padmore Road,
P. O. Box, 76672 - 00508,
NAIROBI.

DESIGN DETAILS

Action	Name	Date
Designed By:	C.J	AUG 2025
Drawn By:	C.J	AUG 2025
Checked By:	S.I	AUG 2025
Approved By:	L.R	AUG 2025

DRAWING REVISIONS

No.	Revision Details	Reviewed	Initials	Date	Approved
		By			
		Checked			
		By			
		Checked			
		By			
		Checked			
		By			
		Checked			
		By			
		Checked			

DRAWING TITLE:

TRAFFIC CALMING MEASURES

DRAWING SCALE:

AS SHOWN

DRAWING NO:

TYP - ALG - 006

TABLE 1

LINE TYPE REF.	DESCRIPTION	ILLUSTRATION	CATEGORY A a	A b	A c	A d	B a	B b	B c	B d
1	Continuous line				0.1				0.1	
2	Double continous line				0.1	0.1			0.1	0.1
3	Broken line		3.0	9.0	0.1		2.0	6.0	0.1	
4	Broken line		2.0	2.0	0.1		2.0	2.0	0.1	
5	Broken line		1.0	1.0	0.2		1.0	1.0	0.2	
6	Combined line		3.0	9.0	0.1	0.1	2.0	6.0	0.1	0.1
7	Combined line		3.0	9.0	0.1	0.1	2.0	6.0	0.1	0.1
8	Double broken line		3.0	9.0	0.1		2.0	6.0	0.1	

(MEASURE IN m)

NOTE:LINE TYPE REF. SUFFIX; W= WHITE LINE, Y= YELLOW LINE

a = Length of stroke
b = Length of gap
c = Width of line
d = Distance between lines

Refer to line type category in Table 1 and diagrams below

NOTE:

Categories A and B in the table above are appropriate for road sections with design speeds above 60km/h and less respectively.

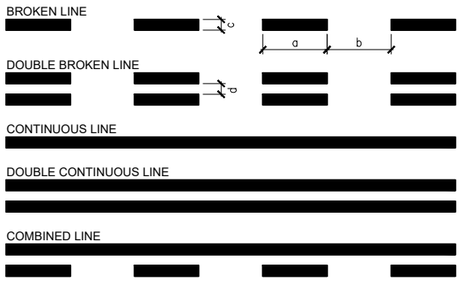

LONGITUDINAL MARKING

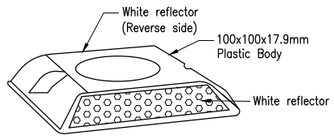

PLASTIC ROAD STUD

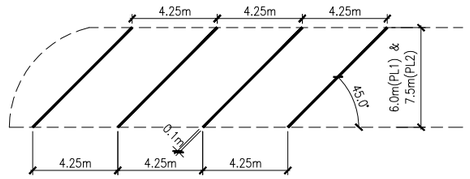

PARKING BAYS FOR LIGHT GOODS VEHICLES AND CARS (TYPE PL1 =6.0m, PL2=7.5m)

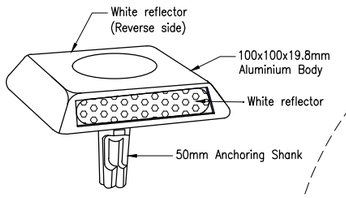

METAL ROAD STUD

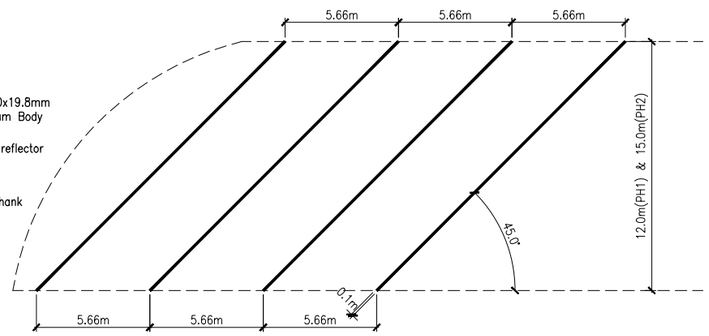

PARKING BAYS FOR BUSES AND TRUCKS (TYPE PH1=12.0m & PH2=15.0m)

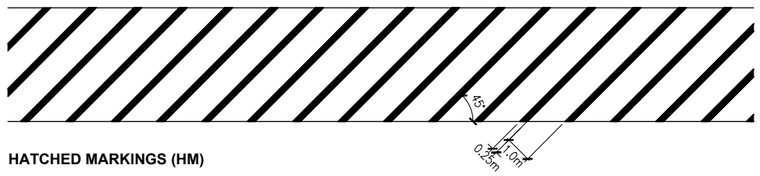

HATCHED MARKINGS (HM)

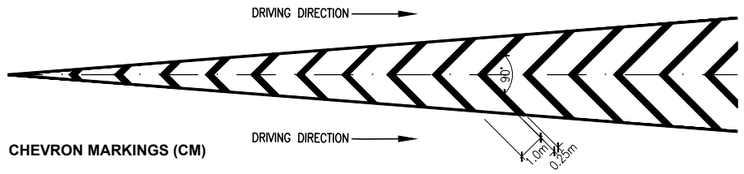

CHEVRON MARKINGS (CM)



STOP LINE



GIVE WAY LINE

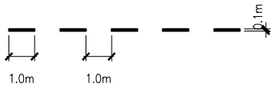

SAFETY LINE

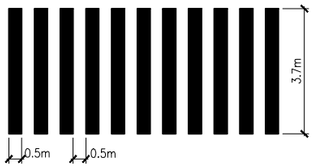

PEDESTRIAN CROSSING (TYPE 2)

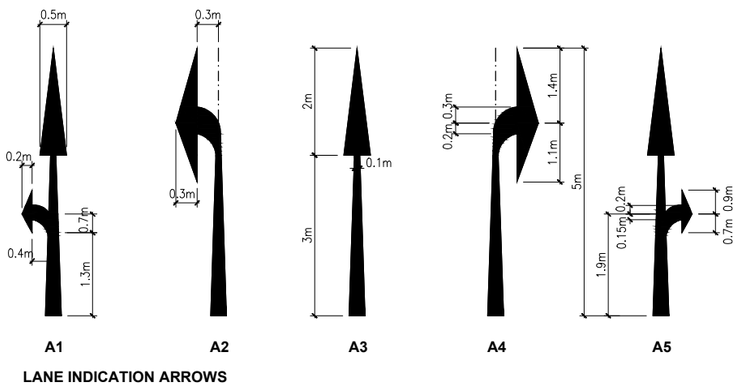

LANE INDICATION ARROWS

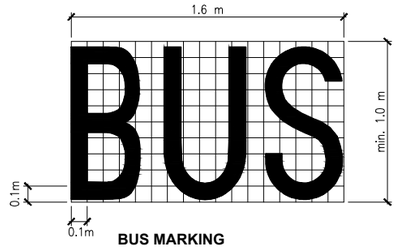

BUS MARKING - WORDED MARKINGS (WHITE)

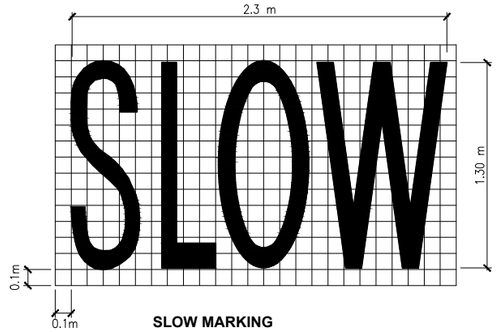

SLOW MARKING - WORDED MARKINGS (WHITE)

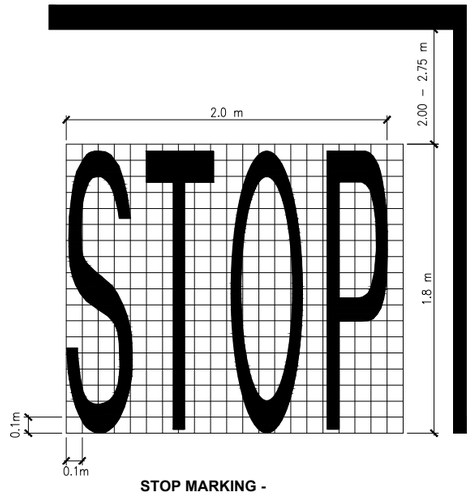

STOP MARKING - WORDED MARKINGS (WHITE)

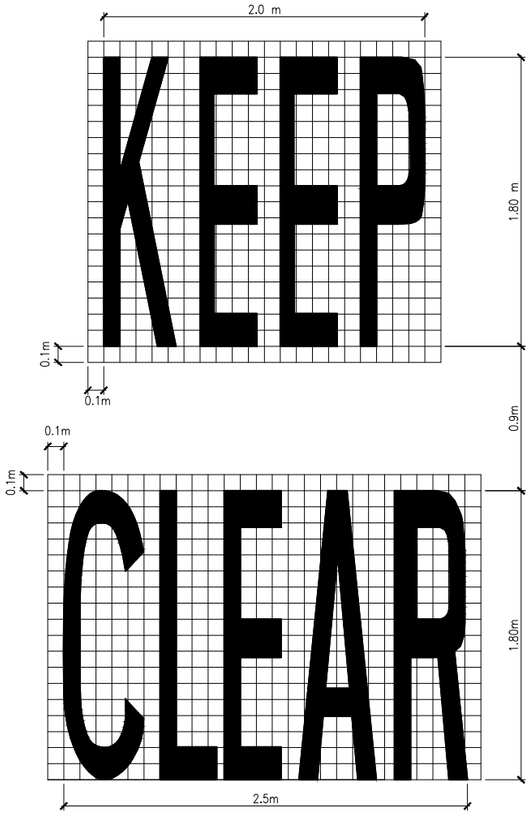

KEEP CLEAR MARKING - WORDED MARKINGS (WHITE)

NOTE:

Road marking: Road markings can be laid in paint or thermoplastic materials. The markings shall be in reflectorised materials.

CLIENT:

KENYA NATIONAL HIGHWAY AUTHORITY
Barabara Plaza,
Off Airport South Road,
P. O. Box, 49712 - 00100,
NAIROBI.

KENYA URBAN ROADS AUTHORITY
Barabara Plaza,
Off Airport South Road,
P. O. Box, 49712 - 00100,
NAIROBI.

FINANCIER:

THE WORLD BANK

PROJECT:

HORN OF AFRICA GATEWAY DEVELOPMENT PROJECT (HOAGDP): -

Consultancy Services for the Design and Works Supervision for the Proposed Extension of Meru Bypass.

CONTRACT NO:

KeNHA/RD/CS/D/4205/2024

CONSULTANT:

egis

One Padmore Place 6th Floor,
George Padmore Road,
P. O. Box, 76672 - 00508,
NAIROBI.

DESIGN DETAILS

Action	Name	Date
Designed By:	C.J	AUG 2025
Drawn By:	C.J	AUG 2025
Checked By:	S.I	AUG 2025
Approved By:	L.R	AUG 2025

DRAWING REVISIONS

No.	Revision Details	Reviewed	Initials	Date	Approved
		By			
		Checked			
		By			
		Checked			
		By			
		Checked			
		By			
		Checked			
		By			
		Checked			

DRAWING TITLE:

STANDARD ROAD MARKINGS.

DRAWING SCALE:

AS SHOWN

DRAWING NO:

TYP - ALG - 007

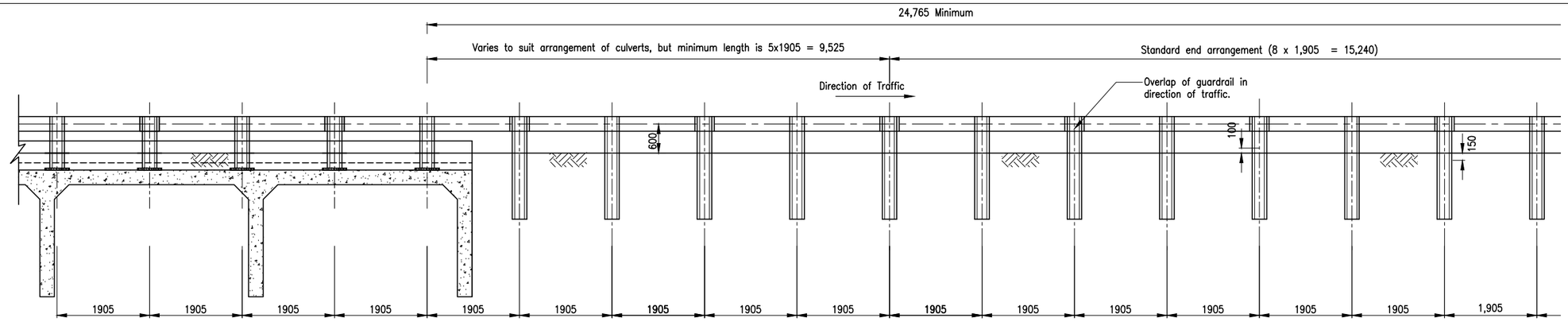

ELEVATION A- A - Scale 1:50

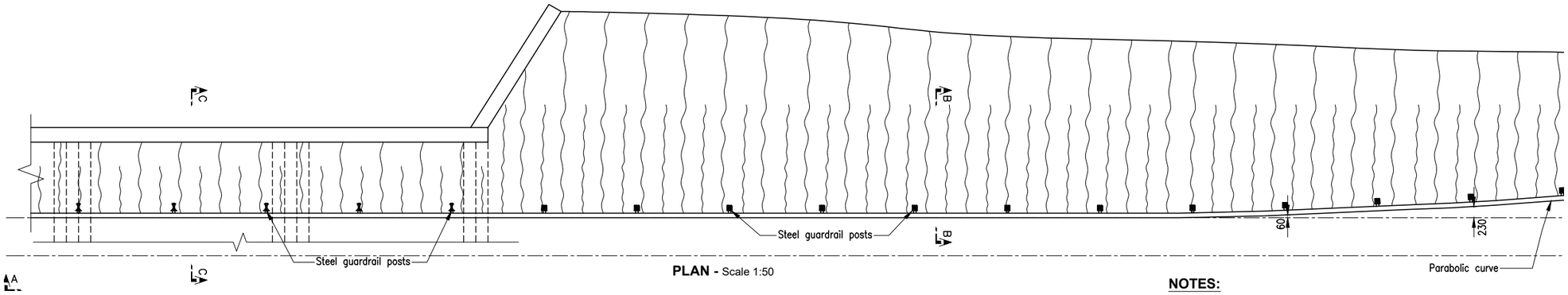

PLAN - Scale 1:50

N.B:

Section C–C detail is to be used where the depth in section B–B can not be accomodated (i.e. where section B–B can not be used.)

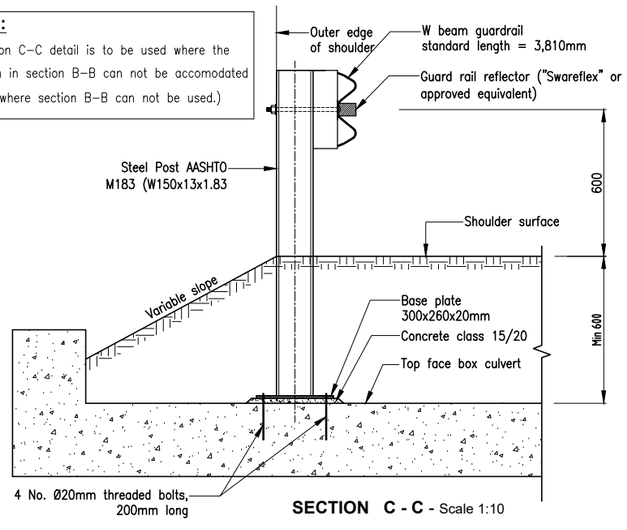

SECTION C - C - Scale 1:10

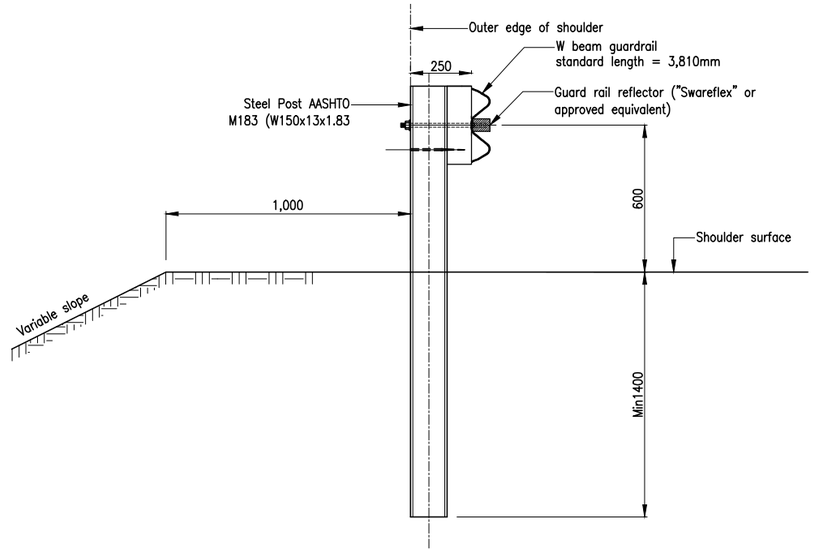

SECTION B - B - Scale 1:10

NOTES:

1. All dimensions are in mm.
2. Guard rails to be located as indicated on the Guard Rail Schedule, or otherwise as directed by the Resident Engineer.
3. For any directed additional separate portion of guard rail on fills or sharp curves, the following minimum lengths are generally applicable:

DESIGN SPEED (Km/h)	LENGTH (m)
60	45
80	60
100	75

4. Steel sections for the posts shall be W150 x 13 x 1.83m or as otherwise directed by the Resident Engineer. The steel shall conform to AASHTO M183. Galvanising shall be in accordance with AASHTO M111. The steel posts must be NCHRP Report 350 TL–3 compliant.
5. The guard rail shall be galvanised corrugated sheet steel W beams conforming to the requirements of AASHTO M180 Class A, Type 1, and shall be obtained from a manufacturer approved by the Ministry of Roads. Galvanising of bolts shall be carried out in accordance with AASHTO M232. The guardrail must comply with NCHRP Report 350TL–3.
6. A standard rail unit of length 3,810mm shall be used.
7. A template shall always be used for fixing the bolts to the steel posts to ensure correct positioning.
8. Compaction around the steel posts shall be the same as the surrounding area.
9. The face of the guardrail shall be parallel to the edge of the shoulder except where splayed.
10. When erection is complete, the nuts shall either be spot welded to the guardrail or to the bolts, or the thread shall be punched over to prevent removal.
11. The setting out of posts shall be symetrical about the centre line of the structure.
12. At the Median if required offset blocks shall be of approved composite polyethyene material complying with the requirement of NCHRP Report 350 TL–3. Dimensions of offset blocks shall be (100x350x190.5), 3.6kg.
13. The steel posts are to be installed in the ground with an air or hydraulic pile driver and an appropriate striking attachment.
14. Guard rail reflectors to be two way reflective, one side red, one side white shall be manufactured from gauge 12–14 steel and installed (pop–rivetted or bolted to guard rails) every 3.8m."Swareflex" ART 3240 type or approved equivalent to be used.

CLIENT:

Kenya National Highways Authority
Quality Highways, Better Connections

KENYA NATIONAL HIGHWAY AUTHORITY
Barabara Plaza,
Off Airport South Road,
P. O. Box, 49712 - 00100,
NAIROBI.

KENYA URBAN ROADS AUTHORITY
Barabara Plaza,
Off Airport South Road,
P. O. Box, 49712 - 00100,
NAIROBI.

FINANCIER:

THE WORLD BANK

PROJECT:

HORN OF AFRICA GATEWAY DEVELOPMENT PROJECT (HOAGDP): -

Consultancy Services for the Design and Works Supervision for the Proposed Extension of Meru Bypass.

CONTRACT NO:

KeNHA/RD/CS/D/4205/2024

CONSULTANT:

egis

One Padmore Place 6th Floor,
George Padmore Road,
P. O. Box, 76672 - 00508,
NAIROBI.

DESIGN DETAILS		
Action	**Name**	**Date**
Designed By:	C.J	AUG 2025
Drawn By:	C.J	AUG 2025
Checked By:	S.I	AUG 2025
Approved By:	L.R	AUG 2025

DRAWING REVISIONS						
No.	Revision Details	Reviewed	Initials	Date	Approved
		By			
		Checked			
		By			
		Checked			
		By			
		Checked			
		By			
		Checked			
		By			
		Checked			

DRAWING TITLE:

GUARD RAIL AT CULVERTS, EMBANKMENTS AND APPROACHES.
(1 of 3)

DRAWING SCALE:

AS SHOWN

DRAWING NO:

TYP-ALG-008

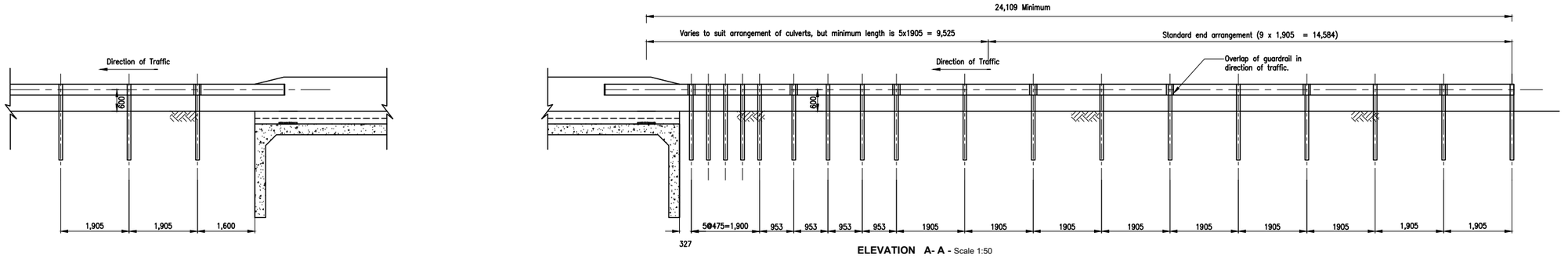

ELEVATION A- A - Scale 1:50

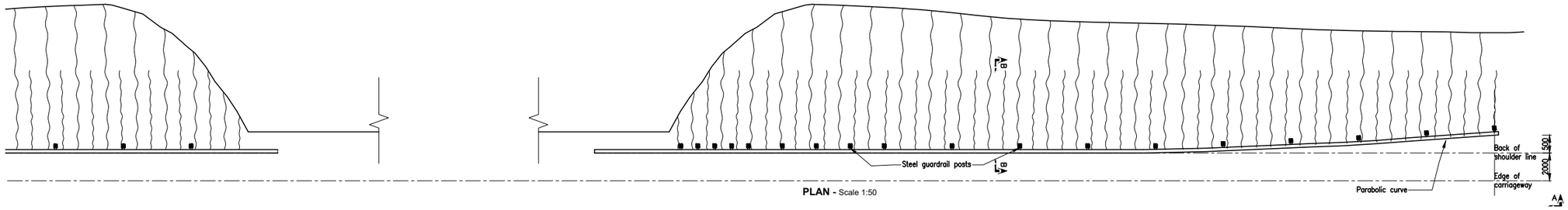

PLAN - Scale 1:50

CLIENT:

KENYA NATIONAL HIGHWAY AUTHORITY
Barabara Plaza,
Off Airport South Road,
P. O. Box, 49712 - 00100,
NAIROBI.

KENYA URBAN ROADS AUTHORITY
Barabara Plaza,
Off Airport South Road,
P. O. Box, 49712 - 00100,
NAIROBI.

FINANCIER:

THE WORLD BANK

PROJECT:

HORN OF AFRICA GATEWAY DEVELOPMENT PROJECT (HOAGDP): -

Consultancy Services for the Design and Works Supervision for the Proposed Extension of Meru Bypass.

CONTRACT NO:

KeNHA/RD/CS/D/4205/2024

CONSULTANT:

egis

One Padmore Place 6th Floor,
George Padmore Road,
P. O. Box, 76672 - 00508,
NAIROBI.

DESIGN DETAILS

Action	Name	Date
Designed By:	C.J	AUG 2025
Drawn By:	C.J	AUG 2025
Checked By:	S.I	AUG 2025
Approved By:	L.R	AUG 2025

DRAWING REVISIONS

No.	Revision Details	Reviewed	Initials	Date	Approved
		By			
		Checked			
		By			
		Checked			
		By			
		Checked			
		By			
		Checked			
		By			
		Checked			

DRAWING TITLE:

GUARD RAIL AT BRIDGE APPROACHES.
(2 of 3)

DRAWING SCALE:

AS SHOWN

DRAWING NO:

TYP-ALG-008

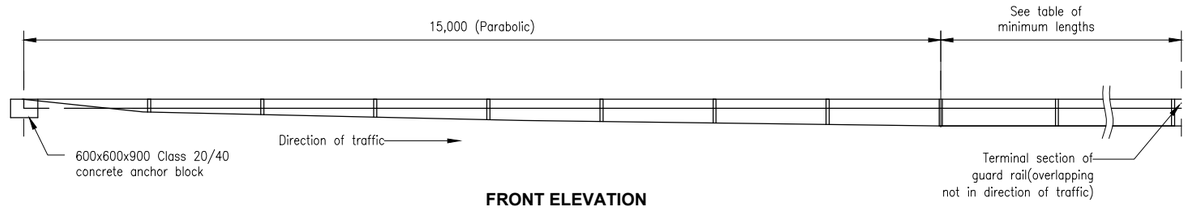

FRONT ELEVATION
NTS

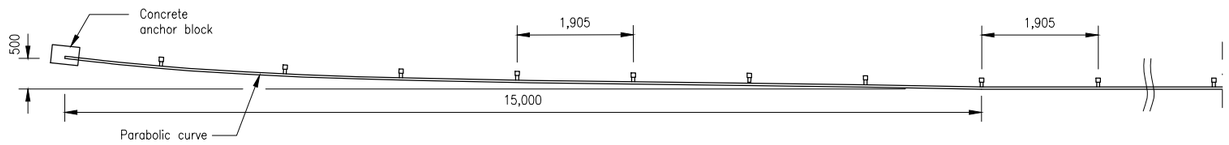

TYPICAL ALIGNMENT OF END OF GUARDRAIL
NTS.

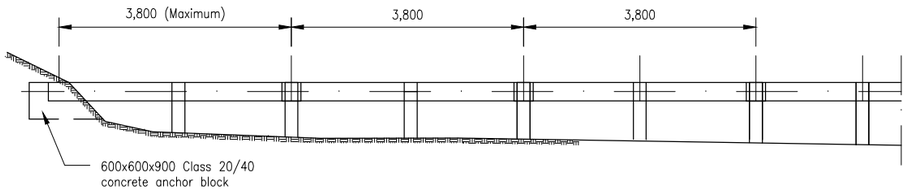

END OF GUARDRAIL ANCHORED IN CUT EMBANKMENT
Scale 1:50

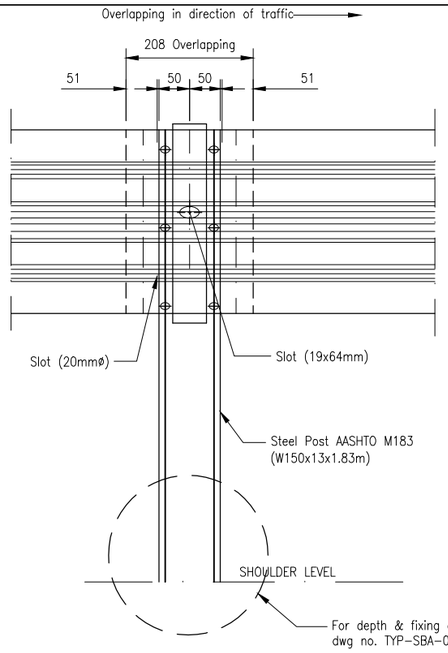

FRONT ELEVATION
Scale 1:5

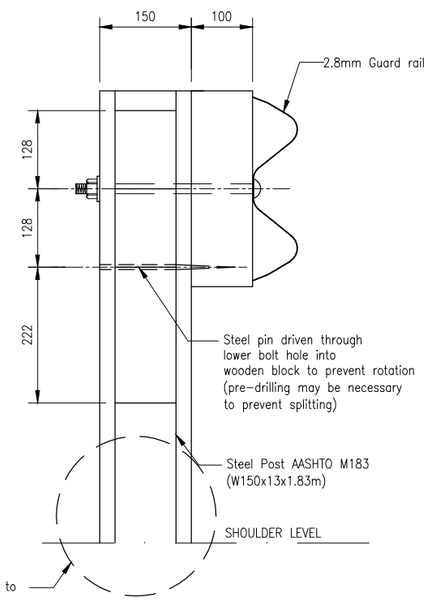

SECTIONAL ELEVATION
Scale 1:5

GUARDRAIL DETAIL
Scale 1:2

PLAN OF TYPICAL TERMINAL SECTION
Scale 1:5

ELEVATION OF TYPICAL TERMINAL SECTION
Scale 1:5

PLAN
Scale 1:5

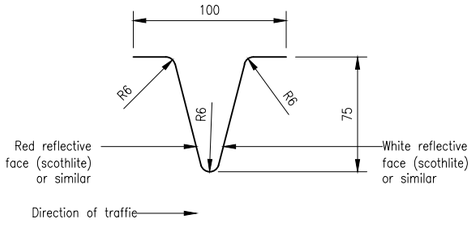

DETAIL OF REFLECTORS
Scale 1:2

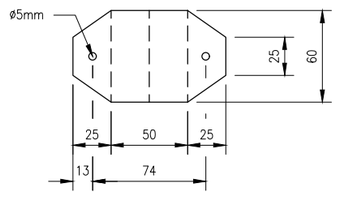

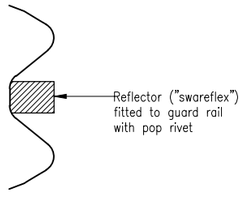

POSITION OF REFLECTOR ON GUARDRAIL
Scale 1:5

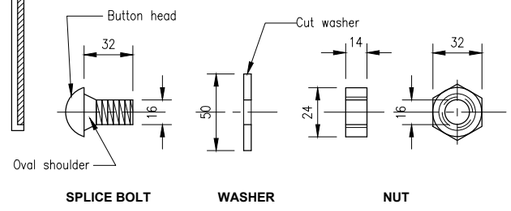

SPLICE BOLT **WASHER** **NUT**

BOLT, WASHER AND NUT
Scale 1:2

CLIENT:
KENYA NATIONAL HIGHWAY AUTHORITY
Barabara Plaza,
Off Airport South Road,
P. O. Box, 49712 - 00100,
NAIROBI.

KENYA URBAN ROADS AUTHORITY
Barabara Plaza,
Off Airport South Road,
P. O. Box, 49712 - 00100,
NAIROBI.

FINANCIER:
THE WORLD BANK

PROJECT:
HORN OF AFRICA GATEWAY DEVELOPMENT PROJECT (HOAGDP): -

Consultancy Services for the Design and Works Supervision for the Proposed Extension of Meru Bypass.

CONTRACT NO:
KeNHA/RD/CS/D/4205/2024

CONSULTANT:
One Padmore Place 6th Floor,
George Padmore Road,
P. O. Box, 76672 - 00508,
NAIROBI.

DESIGN DETAILS		
Action	Name	Date
Designed By:	C.J	AUG 2025
Drawn By:	C.J	AUG 2025
Checked By:	S.I	AUG 2025
Approved By:	L.R	AUG 2025

DRAWING REVISIONS						
No.	Revision Details	Reviewed	Initials	Date	Approved
		By			
		Checked			
		By			
		Checked			
		By			
		Checked			
		By			
		Checked			
		By			
		Checked			

DRAWING TITLE:
GUARD RAIL - CUT EMBANKMENT & END TREATMENT, ALIGNMENT, ELEVATION & FIXING DETAILS (3 of 3)

DRAWING SCALE:
AS SHOWN

DRAWING NO:
TYP-ALG-008

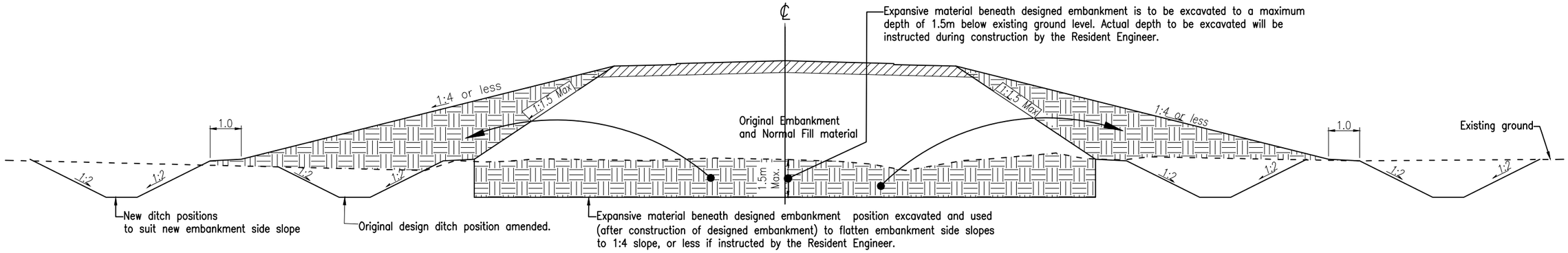

CROSS SECTION SHOWING TREATMENT AND SIDE SLOPE FLATTENING WHERE EXPANSIVE MATERIALS REQUIRING EXCAVATION AND REPLACEMENT ARE ENCOUNTERED

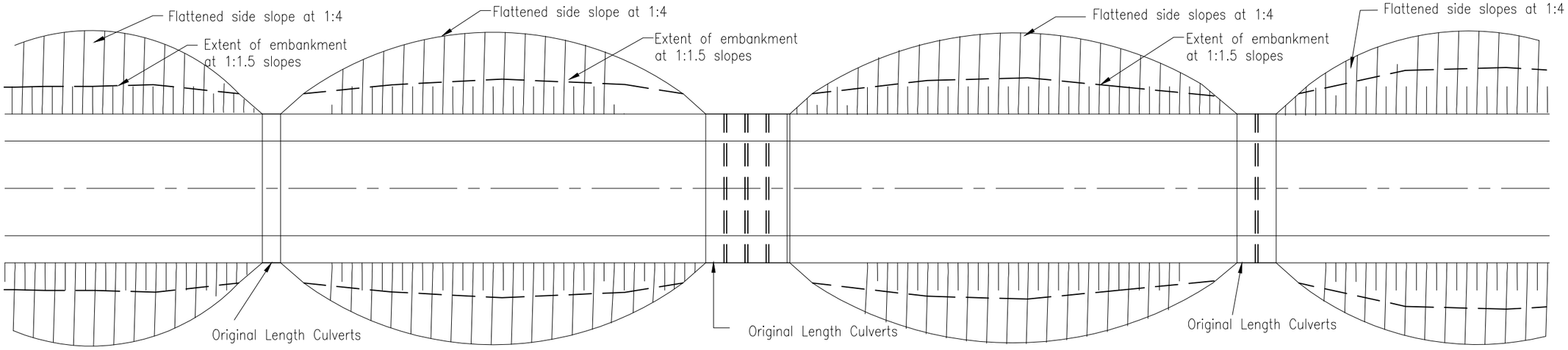

PLAN

Notes:

;;(1). Dimensions in metres unless otherwise indicated.
(2). This drawing to be read in conjunction with Drg.No.TYP–EAW–002
(3). Resident Engineer will instruct where this treatement/ slope flattening is required and the depth of expansive materials to be excavated.
(4). SIDE SLOPES AT CULVERT POSITIONS:
Side slopes will be steepened to the original designed sideslopes at culvert (and Bridge) positions in order to maintain the original designed length of the structure and wing Walls, abutments, etc.
(5). Resident Engineer will provide details of the drainage ditches to suit site conditions.

CLIENT:
KENYA NATIONAL HIGHWAY AUTHORITY
Barabara Plaza,
Off Airport South Road,
P. O. Box, 49712 - 00100,
NAIROBI.

KENYA URBAN ROADS AUTHORITY
Barabara Plaza,
Off Airport South Road,
P. O. Box, 49712 - 00100,
NAIROBI.

FINANCIER:
THE WORLD BANK

PROJECT:
HORN OF AFRICA GATEWAY DEVELOPMENT PROJECT (HOAGDP): -
Consultancy Services for the Design and Works Supervision for the Proposed Extension of Meru Bypass.

CONTRACT NO:
KeNHA/RD/CS/D/4205/2024

CONSULTANT:
egis
One Padmore Place 6th Floor,
George Padmore Road,
P. O. Box, 76672 - 00508,
NAIROBI.

DESIGN DETAILS

Action	Name	Date
Designed By:	C.J	AUG 2025
Drawn By:	C.J	AUG 2025
Checked By:	S.I	AUG 2025
Approved By:	L.R	AUG 2025

DRAWING REVISIONS

No.	Revision Details	Reviewed	Initials	Date	Approved
		By			
		Checked			
		By			
		Checked			
		By			
		Checked			
		By			
		Checked			
		By			
		Checked			

DRAWING TITLE:
EXPANSIVE MATERIALS EXCAVATIONS AND REPLACEMENT

DRAWING SCALE:
AS SHOWN

DRAWING NO:
TYP-EAW-001

(1). Expansive material beneath designed enbankment position excavated and stockpiled in longitudinal berms, equally on both sides at the new road aligment so as to be clear of the works and so as not to constrain or hinder the Contractor in his ability to carry out the remainder of this construction sequence, or the construction of any other part of the contracted works.

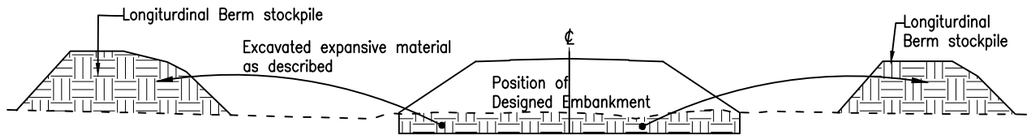

(2). Backfill excavation, beneath position of designed embankment, with material as specified. Compact as specified.

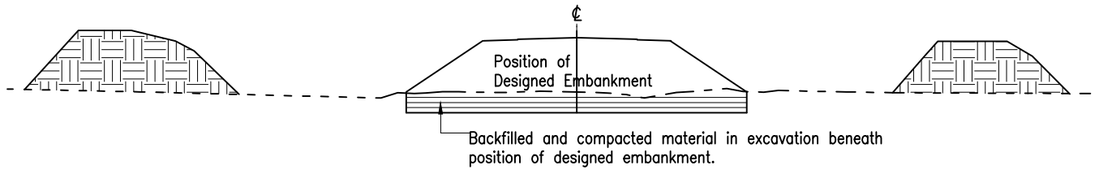

(3). Construct designed embankment from imported materials as specified.

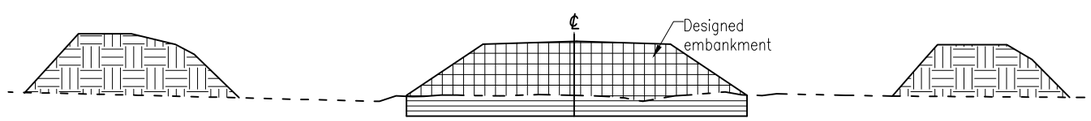

(4). Use expansive materials stockpiled each side of the new alignment to flatten embankment side slopes to 1:4 or flatter slope, as directed by the Resident Engineer. Taper side slopes from 1:4 (or flatter) to originally designed slopes at culvert positions to maintain the length of all culverts, i.e steepen slopes to originally designed slopes close to all culverts.

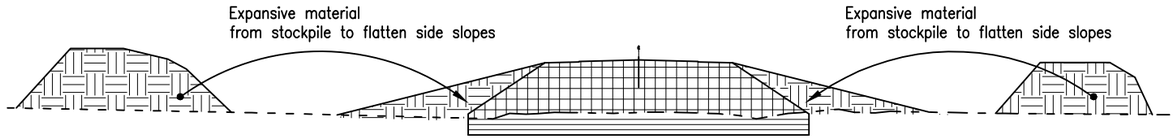

(5). Construct longitudinal roadside drainage ditched in new positions, as instructed by the Resident Engineer

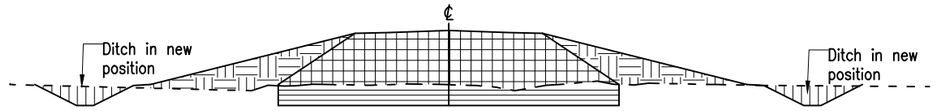

(6). Achieve flattened side slopes constructed from expansive materials;

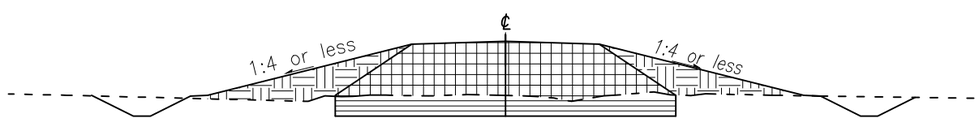

Note:
This drawing to be read in conjunction with Drg.No.TYP–EAW–001

CLIENT:

KENYA NATIONAL HIGHWAY AUTHORITY
Barabara Plaza,
Off Airport South Road,
P. O. Box, 49712 - 00100,
NAIROBI.

KENYA URBAN ROADS AUTHORITY
Barabara Plaza,
Off Airport South Road,
P. O. Box, 49712 - 00100,
NAIROBI.

FINANCIER: THE WORLD BANK

PROJECT:
HORN OF AFRICA GATEWAY DEVELOPMENT PROJECT (HOAGDP): -

Consultancy Services for the Design and Works Supervision for the Proposed Extension of Meru Bypass.

CONTRACT NO:
KeNHA/RD/CS/D/4205/2024

CONSULTANT:

One Padmore Place 6th Floor,
George Padmore Road,
P. O. Box, 76672 - 00508,
NAIROBI.

DESIGN DETAILS

Action	Name	Date
Designed By:	C.J	AUG 2025
Drawn By:	C.J	AUG 2025
Checked By:	S.I	AUG 2025
Approved By:	L.R	AUG 2025

DRAWING REVISIONS

No.	Revision Details	Reviewed	Initials	Date	Approved
		By			
		Checked			
		By			
		Checked			
		By			
		Checked			
		By			
		Checked			
		By			
		Checked			

DRAWING TITLE:
EXPANSIVE MATERIALS EXCAVATION AND REPLACEMENT

DRAWING SCALE:
AS SHOWN

DRAWING NO:
TYP-EAW-002

DRAINAGE STRUCTURES
GENERAL NOTES

1. DIMENSIONS.

All dimensions are in millimetres if not otherwise stated. Drawings are made to scale but normally no dimensions should be scaled off the drawing. If a given dimension is underlined, this means that this particular dimension is not to scale.

2. SETTING OUT.

The setting out details and levels of all structures shall be checked and approved by the Engineer prior to any construction work.

3. FILLING.

Filling for structures shall be selected material, brought up in horizontal layers not exceeding 150mm compacted thickness. Each layer shall be thoroughly mixed, watered, dried as necessary, and compacted to a minimum dry density of 95% MDD (AASHTO T99).

4. CONCRETE.

The following concrete grades shall be used (maximum size of aggregate in mm indicated in bracket).

Grade 15 (20) - Blinding And surround Concrete
Grade 25(20) - Pipe Culverts, Aprons, Wing Walls and Head Walls.
Grade 30 (20) - Box culvert walls and slabs.

Concrete shall not be placed before the Engineer's approval of the form work and reinforcement has been given. All concrete shall be thoroughly compacted by internal vibration to produce a dense uniform mass without segregation and without voids.

5. REINFORCEMENT.

High Tensile ribbed steel bars (grade 500) shall comply with B.S. 4449:2005+A3:2016.
The following nomenclature is on the reinforcement drawings used:- 25T12(20)-38-250 B.F where :-

25	= Number of bars	N.F	= Near Face
T	= High tensile ribbed bars	L.F.	= Lower face
250	=Bar spacing	A.B.S.	= Alternate Bars Staggered
R	= Mild steel bars.	I.F.	= Inner face.
12	= Diameter of bars in mm	O.F.	= Outer face.
38.	= Bar mark	A.W	= Alternate with
B1	= Bottom bars, first layer	F.F.	= Far Face
B.F.	= Both faces.	L.L.	= Lower layer.
U.F.	= Upper face	U.L.	= Upper layer.
B2	= Bottom bars, second layer	T1	= Top bars, first layer
T2	= Top bars, second layer	20	= Shape Code

All steel bending dimensions to be in accordance with B.S. 4466 as shown below.

Min. diameter of bend radius = D
Diameter of reinforcement bar = d
For d = 6,8,10,12 and 16 mm, D = 6xd
For d = 20 and 25 mm, D = 8xd

Minimum lap length of all bars shall be (25 times diameter of the smaller bar lapped +150) where bars are in tension, and (20 times diameter of the smaller bar lapped +150) where bars are in compression. All bar lap lengths to satisfy the provisions of BS 5400 Part 4.

All bars to be bent cold and no bars shall be straightened or bent again after having been bent.

6. CONSTRUCTION JOINT.

The position and form of any construction joint shall be as shown on drawings or as agreed with the Engineer before concrete is placed.

7. CONCRETE COVER TO REINFORCEMENT.

The concrete cover to reinforcement bars shall be as follows if not otherwise shown :-

Culvert walls and slabs = 50 mm

8. FORMWORK.

All formwork shall be approved by the Engineer. All exposed faces to have 25x25 mm chamfers unless otherwise stated.

9. PROTECTION AND CURING OF CONCRETE.

The concrete surface shall immediately after completion be protected from the harmful effects of sun, drying, winds, rains, running water and shocks. It shall be kept damp for at least 5 days as follows :-

Vertical faces and underside horizontal surfaces: The formwork shall be left in place, and sprayed with water regularly.

Top/Exposed Horizontal surfaces: They shall be kept damp through a well soaked layer of sand

10. SCOUR PROTECTION.

Rip-Rap, grouted stone pitching or gabions for scour protection and for stabilisation of abutments and wingwalls shall be placed as directed by the Engineer.

CLIENT:

Kenya National Highways Authority
Quality Highways, Better Connections

KENYA NATIONAL HIGHWAY AUTHORITY
Barabara Plaza,
Off Airport South Road,
P. O. Box, 49712 - 00100,
NAIROBI.

KENYA URBAN ROADS AUTHORITY
Barabara Plaza,
Off Airport South Road,
P. O. Box, 49712 - 00100,
NAIROBI.

FINANCIER:

THE WORLD BANK

PROJECT:

HORN OF AFRICA GATEWAY DEVELOPMENT PROJECT (HOAGDP): -

Consultancy Services for the Design and Works Supervision for the Proposed Extension of Meru Bypass.

CONTRACT NO:

KeNHA/RD/CS/D/4205/2024

CONSULTANT:

egis

One Padmore Place 6th Floor,
George Padmore Road,
P. O. Box, 76672 - 00508,
NAIROBI.

DESIGN DETAILS

Action	Name	Date
Designed By:	C.J	AUG 2025
Drawn By:	C.J	AUG 2025
Checked By:	S.I	AUG 2025
Approved By:	L.R	AUG 2025

DRAWING REVISIONS

No.	Revision Details	Reviewed	Initials	Date	Approved
		By			
		Checked			
		By			
		Checked			
		By			
		Checked			
		By			
		Checked			
		By			
		Checked			

DRAWING TITLE:
DRAINAGE STRUCTURES GENERAL NOTES.

DRAWING SCALE:
AS SHOWN

DRAWING NO:
TYP - DRA - 001

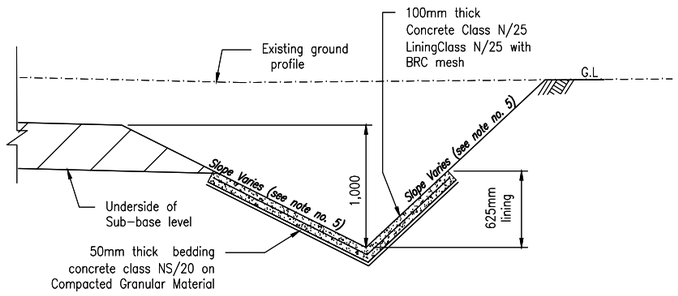

LINED DITCH TYPE MA1
(Type A1 lined with Concrete)
Scale 1:50

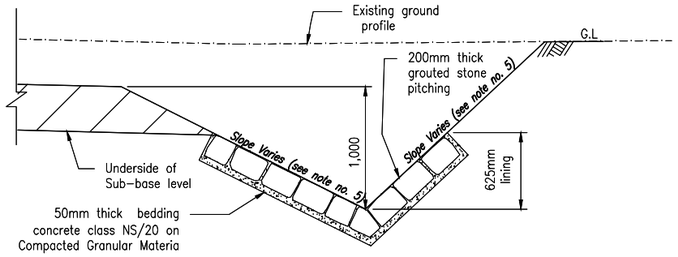

LINED DITCH TYPE MA1
(Type A1 lined with masonry)
Scale 1:50

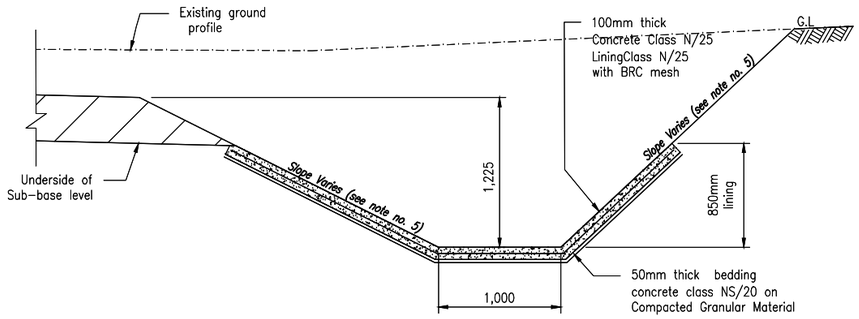

LINED DITCH TYPE MB1
(Type B1 lined with Concrete)
Scale 1:25

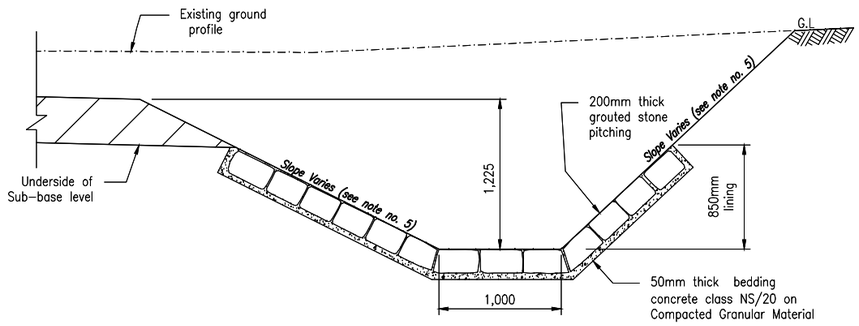

LINED DITCH TYPE MB1
(Type B1 lined with masonry)
Scale 1:25

Notes:

(1). Dimensions are in millimetres, unless otherwise indicated. Lining details shall be as shown on this dwg unless otherwise instructed by the Resident Engineer.

(2). For typical road cross sections in cut areas, refer to Dwg. No. TYP–DRA–002

(3) For typical details of access across ditch types, see Dwg. no. TYP–DRA–007 & 008.

(4). NS where referred to in concrete strength class means "non–structural" and need not comply with any strength requirements as per clause 1702 of the Standard Specification for Road and Bridge Construction.

(5). For slope details refer to the specific cross section drawing. For general slope principles refer to Dwg.no. TYP–PAV–001.

(6). Transitions between different ditch types are to take place linearly over a distance of 20m between cross section points.

CLIENT:
KENYA NATIONAL HIGHWAY AUTHORITY
Barabara Plaza,
Off Airport South Road,
P. O. Box, 49712 - 00100,
NAIROBI.

KENYA URBAN ROADS AUTHORITY
Barabara Plaza,
Off Airport South Road,
P. O. Box, 49712 - 00100,
NAIROBI.

FINANCIER:
THE WORLD BANK

PROJECT:
HORN OF AFRICA GATEWAY DEVELOPMENT PROJECT (HOAGDP): -

Consultancy Services for the Design and Works Supervision for the Proposed Extension of Meru Bypass.

CONTRACT NO:
KeNHA/RD/CS/D/4205/2024

CONSULTANT:
egis
One Padmore Place 6th Floor,
George Padmore Road,
P. O. Box, 76672 - 00508,
NAIROBI.

DESIGN DETAILS

Action	Name	Date
Designed By:	C.J	AUG 2025
Drawn By:	C.J	AUG 2025
Checked By:	S.I	AUG 2025
Approved By:	L.R	AUG 2025

DRAWING REVISIONS

No.	Revision Details	Reviewed	Initials	Date	Approved
		By			
		Checked			
		By			
		Checked			
		By			
		Checked			
		By			
		Checked			
		By			
		Checked			

DRAWING TITLE:
TYPICAL DRAIN DITCH CROSS SECTIONS IN CUT AREAS

DRAWING SCALE:
AS SHOWN

DRAWING NO:
TYP - DRA - 002

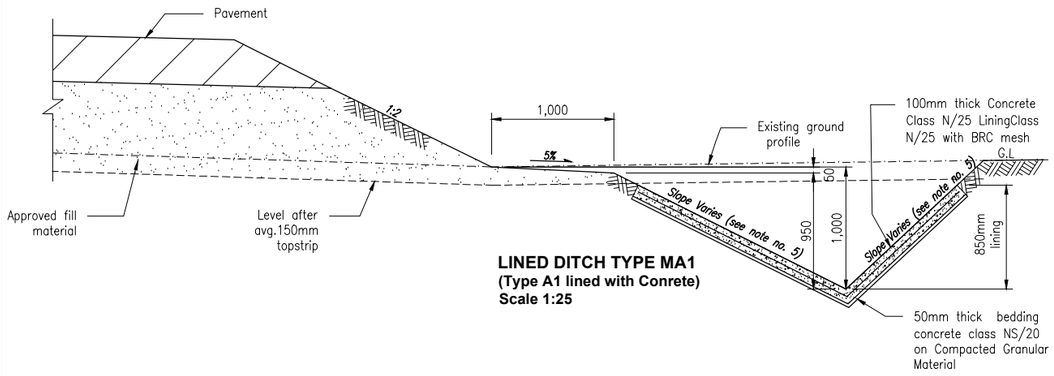

LINED DITCH TYPE MA1
(Type A1 lined with Conrete)
Scale 1:25

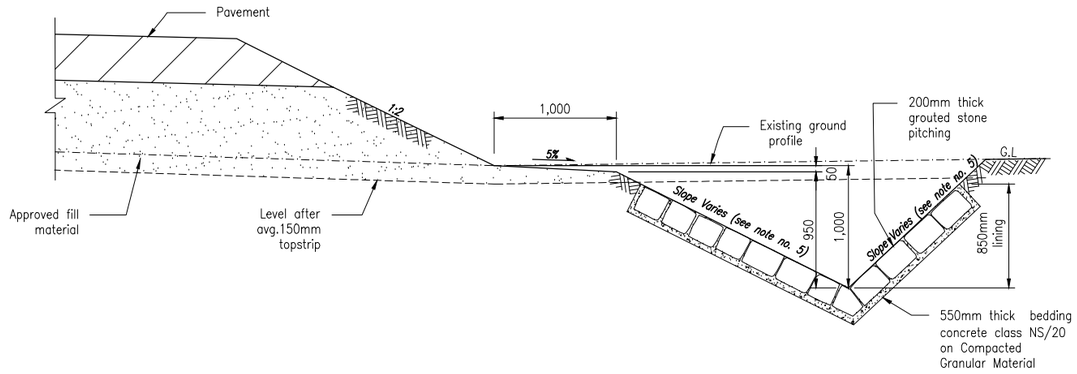

LINED DITCH TYPE MA1
(Type A1 lined with masonry)
Scale 1:25

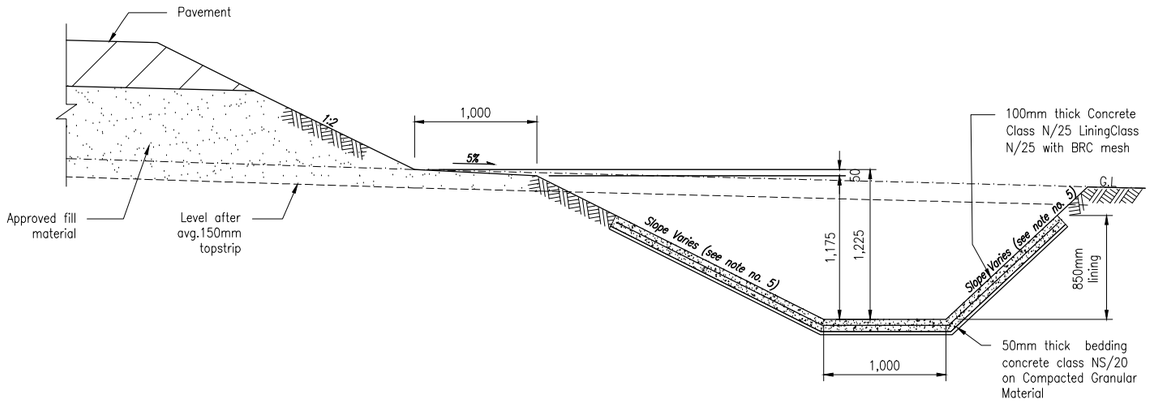

LINED DITCH TYPE MB1
(Type B1 lined with Concrete)
Scale 1:25

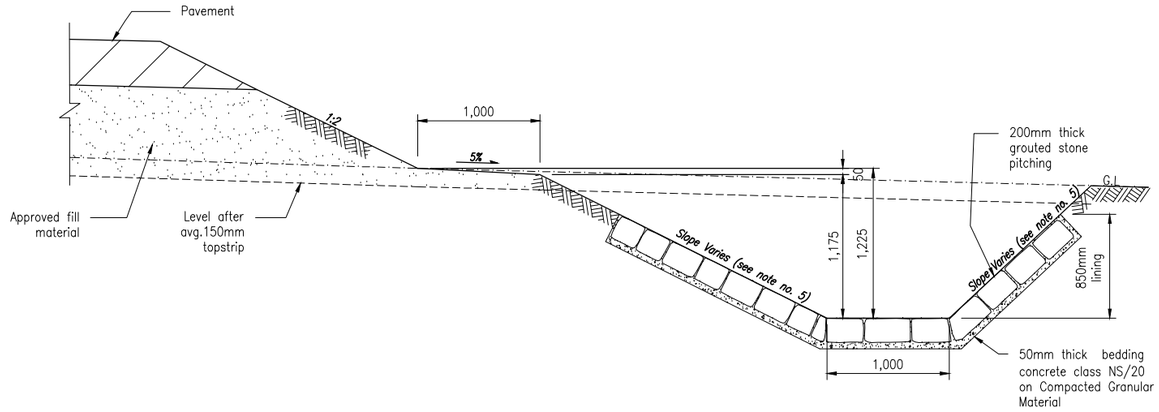

LINED DITCH TYPE MB1
(Type B1 lined with masonry)
Scale 1:25

Notes:

(1). Dimensions are in millimetres, unless otherwise indicated. Lining details shall be as shown on this dwg unless otherwise instructed by the Resident Engineer.

(2). For typical road cross sections in cut areas, refer to Dwg. No. TYP–DRA–002

(3) For typical details of access across ditch types, see Dwg. no. TYP–DRA–007 & 008.

(4). NS where referred to in concrete strength class means "non–structural" and need not comply with any strength requirements as per clause 1702 of the Standard Specification for Road and Bridge Construction.

(5). For slope details refer to the specific cross section drawing. For general slope principles refer to Dwg.no. TYP–PAV–001.

(6). Transitions between different ditch types are to take place linearly over a distance of 20m between cross section points.

CLIENT:
KENYA NATIONAL HIGHWAY AUTHORITY
Barabara Plaza,
Off Airport South Road,
P. O. Box, 49712 - 00100,
NAIROBI.

KENYA URBAN ROADS AUTHORITY
Barabara Plaza,
Off Airport South Road,
P. O. Box, 49712 - 00100,
NAIROBI.

FINANCIER:
THE WORLD BANK

PROJECT:
HORN OF AFRICA GATEWAY DEVELOPMENT PROJECT (HOAGDP): -

Consultancy Services for the Design and Works Supervision for the Proposed Extension of Meru Bypass.

CONTRACT NO:
KeNHA/RD/CS/D/4205/2024

CONSULTANT:
egis
One Padmore Place 6th Floor,
George Padmore Road,
P. O. Box, 76672 - 00508,
NAIROBI.

DESIGN DETAILS

Action	Name	Date
Designed By:	C.J	AUG 2025
Drawn By:	C.J	AUG 2025
Checked By:	S.I	AUG 2025
Approved By:	L.R	AUG 2025

DRAWING REVISIONS

No.	Revision Details	Reviewed	Initials	Date	Approved
		By			
		Checked			
		By			
		Checked			
		By			
		Checked			
		By			
		Checked			
		By			
		Checked			

DRAWING TITLE:
TYPICAL DRAIN DITCH CROSS SECTIONS IN FILL AREAS

DRAWING SCALE:
AS SHOWN

DRAWING NO:
TYP - DRA - 003

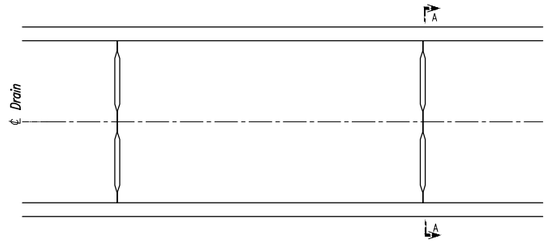

COVERED DRAIN - PLAN
Scale 1:20

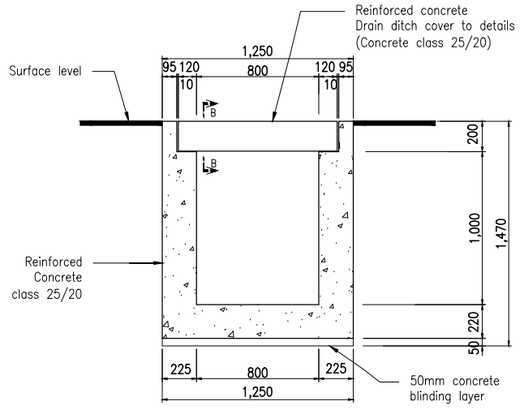

SECTION A-A
Scale 1:20

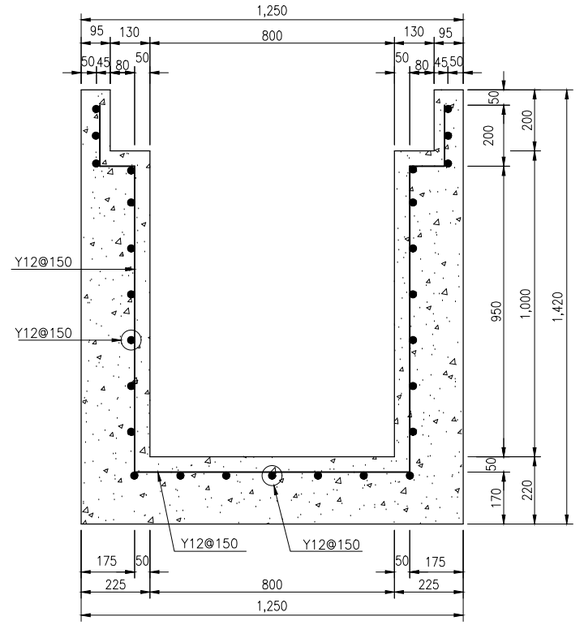

SECTION A-A
(SHOWING REINFORCEMENT DETAILS) - Scale 1:10

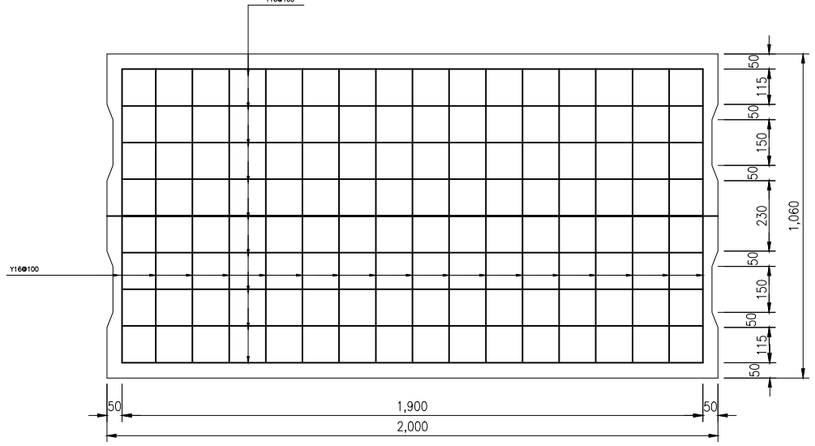

COVER PLAN
REINFORCEMENT DETAILS
- Scale 1:10

Notes:

(1). Dimensions are in millimetres.

(2). Any over-excavation to be backfilled with selected material approved by the Resident Engineer.

CLIENT:
KENYA NATIONAL HIGHWAY AUTHORITY
Barabara Plaza,
Off Airport South Road,
P. O. Box, 49712 - 00100,
NAIROBI.

KENYA URBAN ROADS AUTHORITY
Barabara Plaza,
Off Airport South Road,
P. O. Box, 49712 - 00100,
NAIROBI.

FINANCIER:
THE WORLD BANK

PROJECT:
HORN OF AFRICA GATEWAY DEVELOPMENT PROJECT (HOAGDP): -

Consultancy Services for the Design and Works Supervision for the Proposed Extension of Meru Bypass.

CONTRACT NO:
KeNHA/RD/CS/D/4205/2024

CONSULTANT:
One Padmore Place 6th Floor,
George Padmore Road,
P. O. Box, 76672 - 00508,
NAIROBI.

DESIGN DETAILS		
Action	Name	Date
Designed By:	C.J	AUG 2025
Drawn By:	C.J	AUG 2025
Checked By:	S.I	AUG 2025
Approved By:	L.R	AUG 2025

DRAWING REVISIONS						
No.	Revision Details	Reviewed	Initials	Date	Approved	
		By				
		Checked				
		By				
		Checked				
		By				
		Checked				
		By				
		Checked				
		By				
		Checked				

DRAWING TITLE:
TYPICAL COVERED DRAIN

DRAWING SCALE:
AS SHOWN

DRAWING NO:
TYP-DRA-004

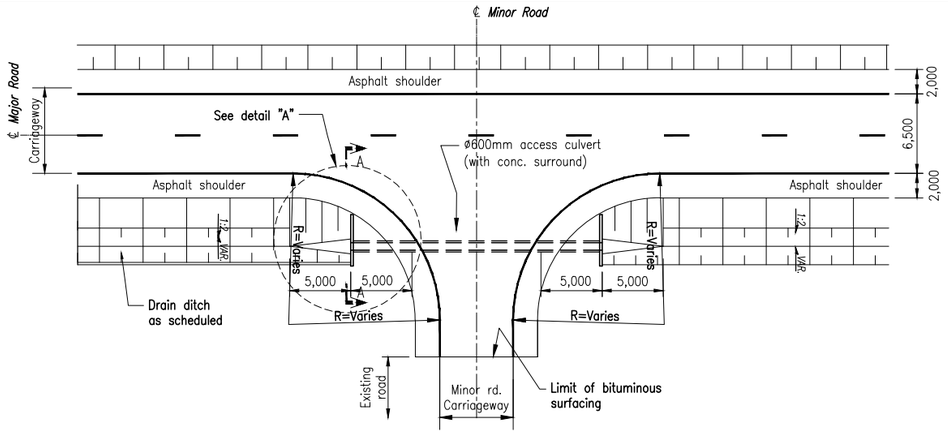

ACCESS OVER DITCH TYPE A1 & MA1
Scale 1:250

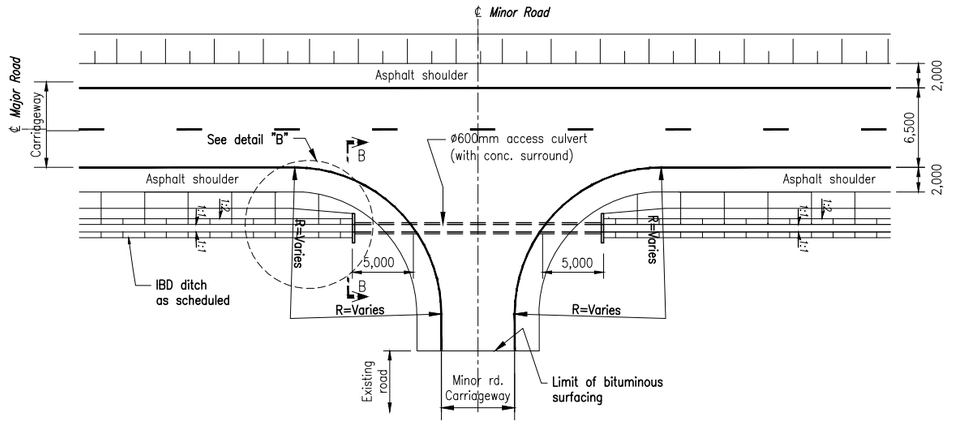

ACCESS OVER IBD DITCH
Scale 1:250

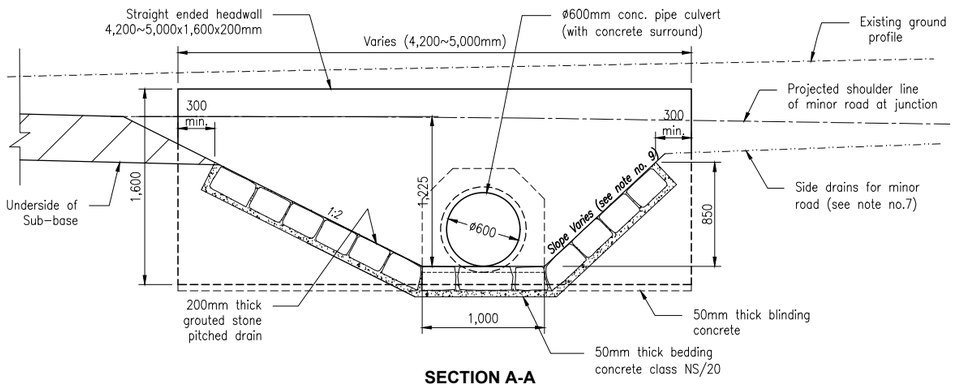

SECTION A-A
Scale 1:25

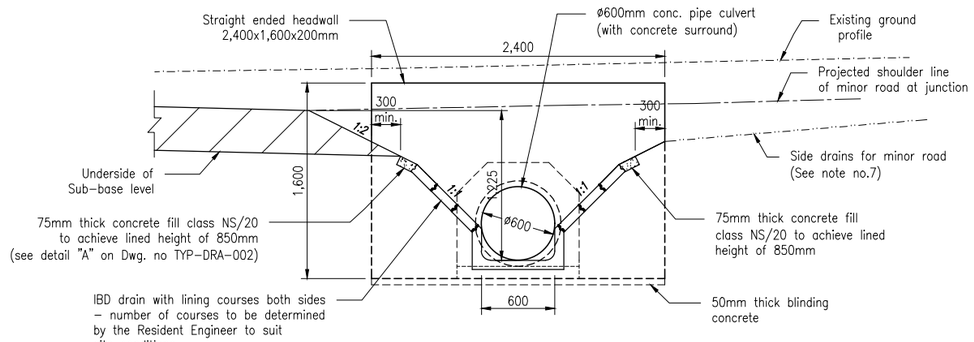

SECTION B-B
Scale 1:25

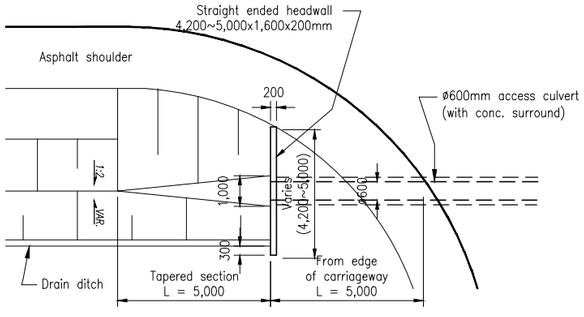

DETAIL "A"
Scale 1:100

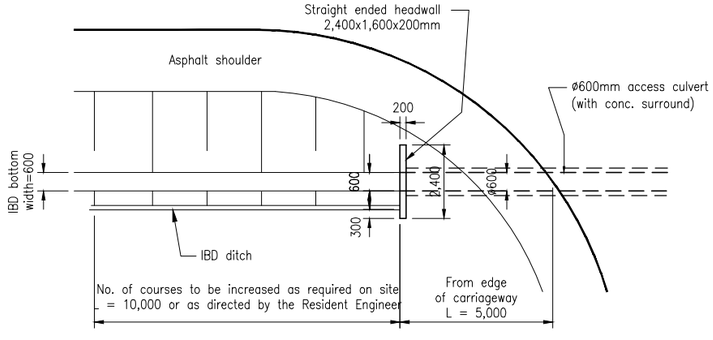

DETAIL "B"
Scale 1:100

Notes:

(1). Dimensions are in millimetres, unless otherwise indicated.
Lining details shall be as shown unless otherwise instructed by the Resident Engineer.

(2). For typical details of access across ditch types B1 & MB1, B3 & MB3, see Dwg. no. TYP-DRA-008.

(3) Ditch lining height at tapered section (transition) immediately before and after culvert headwall shall be upto the underside of sub-base on the side slope, and upto 850mm minimum on the back slope.

(4). For details of drain ditch types, refer to Dwg. no. Dwg TYP-DRA-002 & 003

(5). Side drains for minor road to be adjusted as appropriate to ensure drainage of minor road in accordance with instructions of Resident Engineer.

(6). NS where referred to in concrete strength class means "non-structural" and need not comply with any strength requirements as per clause 1702 of the Standard Specification for Road and Bridge Construction.

(7). For slope details refer to the specific cross section drawing.
For general slope principles, refer to Dwg. no. TYP-PAV-002.

CLIENT:
Kenya National Highways Authority
Quality Highways, Better Connections
KENYA NATIONAL HIGHWAY AUTHORITY
Barabara Plaza,
Off Airport South Road,
P. O. Box, 49712 - 00100,
NAIROBI.

KENYA URBAN ROADS AUTHORITY
Barabara Plaza,
Off Airport South Road,
P. O. Box, 49712 - 00100,
NAIROBI.

FINANCIER:
THE WORLD BANK

PROJECT:
HORN OF AFRICA GATEWAY DEVELOPMENT PROJECT (HOAGDP): -
Consultancy Services for the Design and Works Supervision for the Proposed Extension of Meru Bypass.

CONTRACT NO:
KeNHA/RD/CS/D/4205/2024

CONSULTANT:
egis
One Padmore Place 6th Floor,
George Padmore Road,
P. O. Box, 76672 - 00508,
NAIROBI.

DESIGN DETAILS

Action	Name	Date
Designed By:	C.J	AUG 2025
Drawn By:	C.J	AUG 2025
Checked By:	S.I	AUG 2025
Approved By:	L.R	AUG 2025

DRAWING REVISIONS

No.	Revision Details	Reviewed	Initials	Date	Approved
		By			
		Checked			
		By			
		Checked			
		By			
		Checked			
		By			
		Checked			
		By			
		Checked			

DRAWING TITLE:
ACCESS ACROSS DITCH TYPE A1, MA1 AND IBD

DRAWING SCALE:
AS SHOWN

DRAWING NO:
TYP - DRA - 007

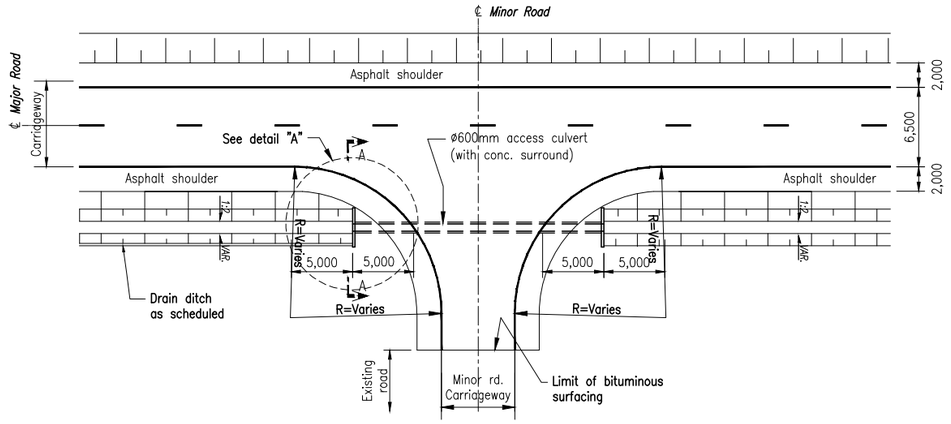

ACCESS OVER DITCH TYPE B1 & MB1
Scale 1:250

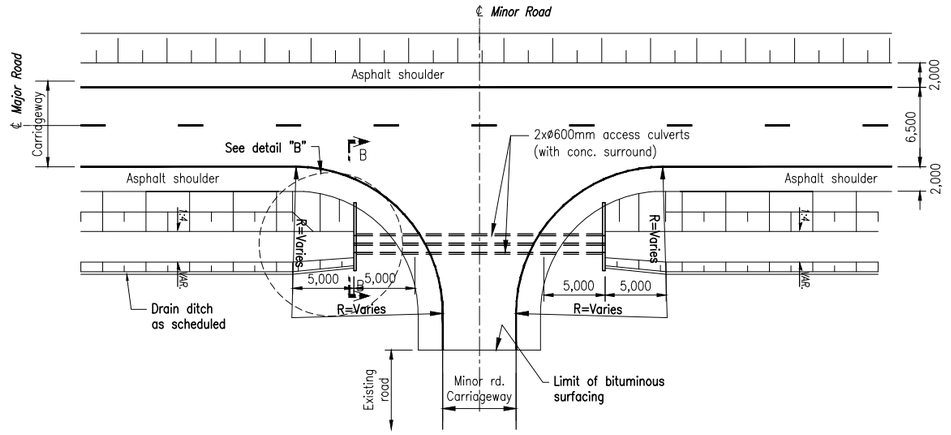

ACCESS OVER DITCH TYPE B3 & MB3
Scale 1:250

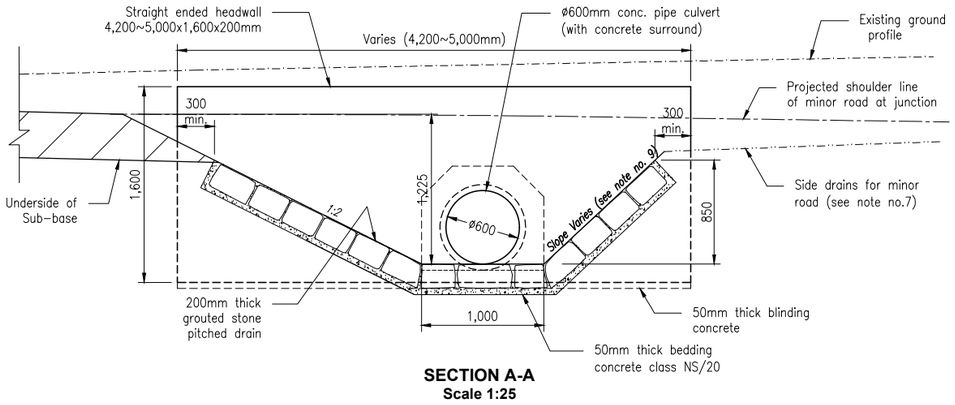

SECTION A-A
Scale 1:25

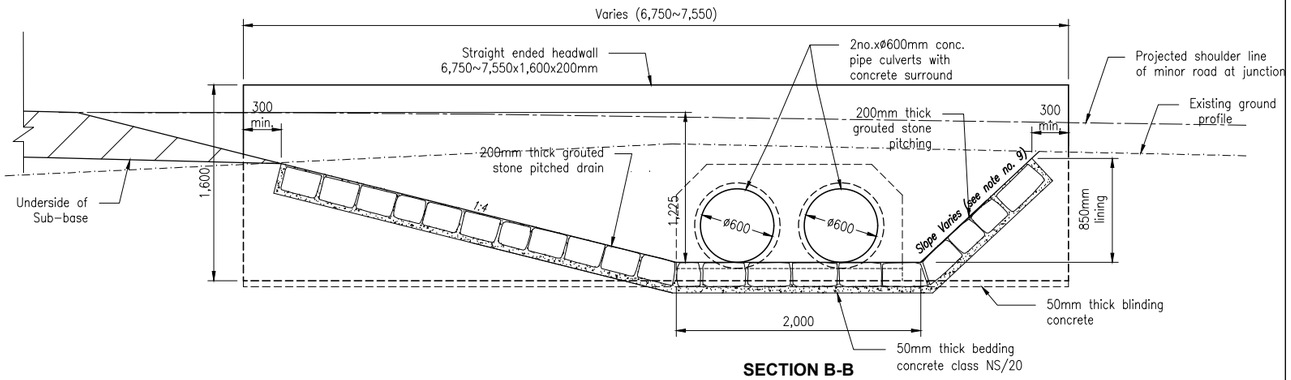

SECTION B-B
Scale 1:25

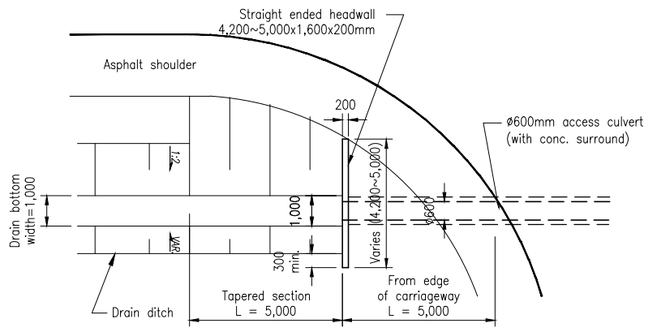

DETAIL "A"
Scale 1:100

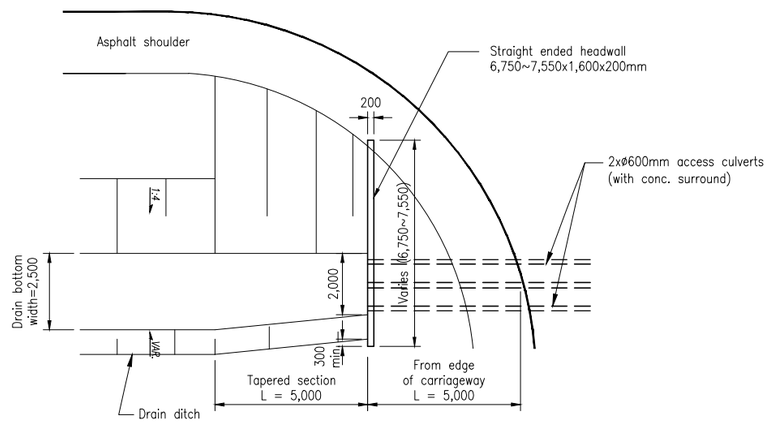

DETAIL "B" - Scale 1:100

Notes:

(1). Dimensions are in millimetres, unless otherwise indicated. Lining details shall be as shown unless otherwise instructed by the Resident Engineer.

(2). For typical details of access across ditch types A1 & MA1, IBD ditch, see Dwg. no. TYP-DRA-007.

(3) Ditch lining height at tapered section (transition) immediately before and after culvert headwall shall be upto the underside of sub-base on the side slope, and upto 850mm minimum on the back slope.

(4). For details of drain ditch types, refer to Dwg. no. Dwg TYP-DRA-002 & 003

(5). Side drains for minor road to be adjusted as appropriate to ensure drainage of minor road in accordance with instructions of Resident Engineer.

(6). NS where referred to in concrete strength class means "non-structural" and need not comply with any strength requirements as per clause 1702 of the Standard Specification for Road and Bridge Construction.

(7). For slope details refer to the specific cross section drawing. For general slope principles, refer to Dwg. no. TYP-PAV-002.

CLIENT:

KENYA NATIONAL HIGHWAY AUTHORITY
Barabara Plaza,
Off Airport South Road,
P. O. Box, 49712 - 00100,
NAIROBI.

KENYA URBAN ROADS AUTHORITY
Barabara Plaza,
Off Airport South Road,
P. O. Box, 49712 - 00100,
NAIROBI.

FINANCIER:

THE WORLD BANK

PROJECT:

HORN OF AFRICA GATEWAY DEVELOPMENT PROJECT (HOAGDP): -

Consultancy Services for the Design and Works Supervision for the Proposed Extension of Meru Bypass.

CONTRACT NO:

KeNHA/RD/CS/D/4205/2024

CONSULTANT:

One Padmore Place 6th Floor,
George Padmore Road,
P. O. Box, 76672 - 00508,
NAIROBI.

DESIGN DETAILS

Action	Name	Date
Designed By:	C.J	AUG 2025
Drawn By:	C.J	AUG 2025
Checked By:	S.I	AUG 2025
Approved By:	L.R	AUG 2025

DRAWING REVISIONS

No.	Revision Details	Reviewed	Initials	Date	Approved
		By			
		Checked			
		By			
		Checked			
		By			
		Checked			
		By			
		Checked			
		By			
		Checked			

DRAWING TITLE:

ACCESS ACROS DITCH TYPE B1, MB1 AND MB3

DRAWING SCALE:

AS SHOWN

DRAWING NO:

TYP - DRA - 008

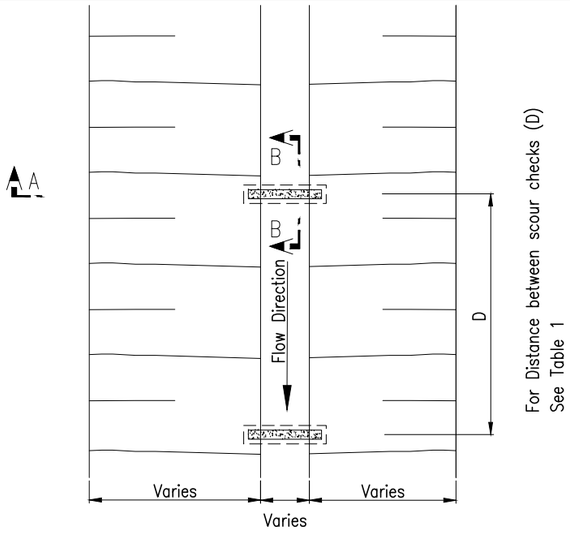

PRECAST CONCRETE SCOUR CHECK
TO DITCH TYPE A1
Scale 1:50

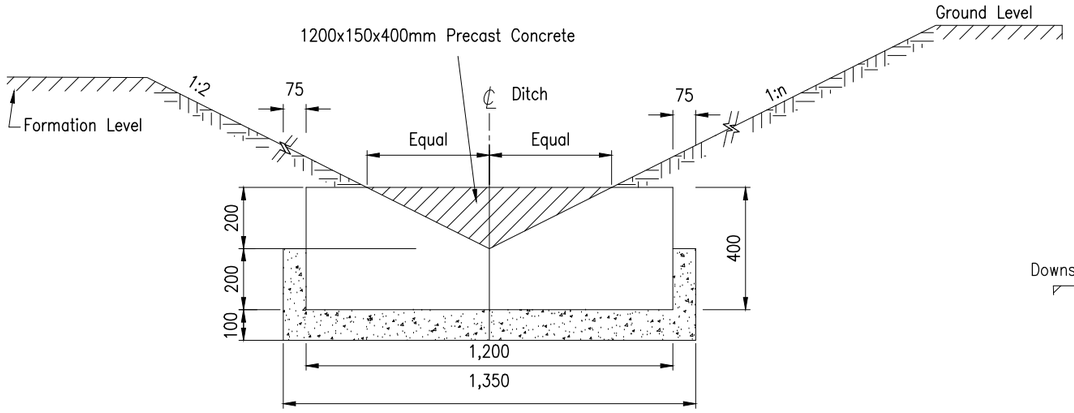

PRECAST CONCRETE SCOUR CHECK

TO DITCH TYPE A1
SECTION A-A
Scale 1:10

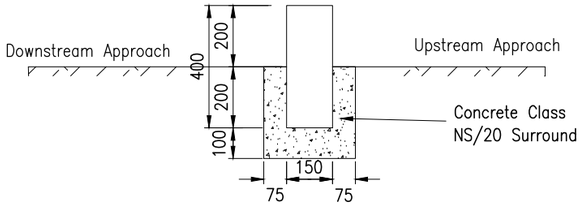

PRECAST CONCRETE SCOUR CHECK
TO DITCH TYPE A1
SECTION B-B
Scale 1:10

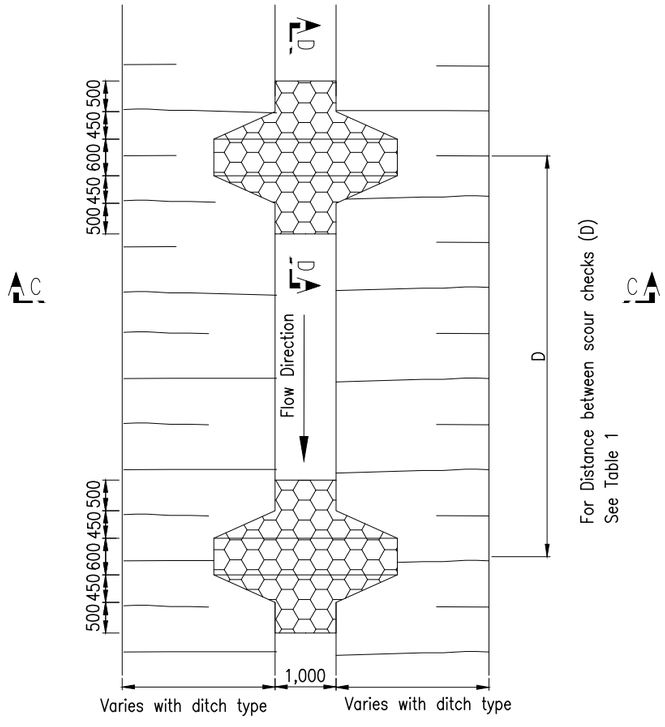

STONE PITCHED SCOUR CHECK
TO DITCH TYPE B1
Scale 1:50

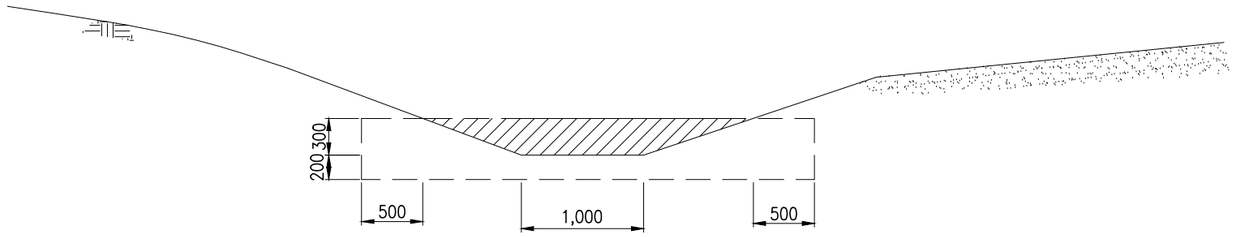

STONE PITCHED SCOUR CHECK
TO DITCH TYPE B1
SECTION C - C
Scale 1:25

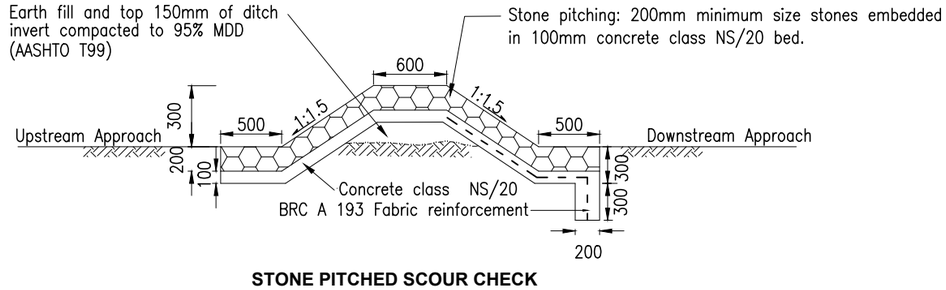

STONE PITCHED SCOUR CHECK
TO DITCH TYPE B1
SECTION D - D
Scale 1:25

TABLE I	
Guide Table For Spacing between the scour checks (D)	
(Final Spacing to be determined by the Supervisor's Representative)	
Ditch Grade %	Spacing (m)
7	9
6	10
5	12
4	15

NOTES:

1. All dimensions in millimetres.
2. For location of scour checks, refer to scour checks schedule drawing No: SCH–DRA–001 Exact locations may be varied by Resident Engineer.
3. For ditch type details, refer to drawing No. TYP–DRA–002 and No. TYP–DRA–003
4. NS where referred to in concrete strength class means "non–structural" and need not comply with any strength requirements as per clause 1702 of the Standard Specification for Road and Bridge Construction.

CLIENT:
Kenya National Highways Authority
Quality Highways, Better Connections
KENYA NATIONAL HIGHWAY AUTHORITY
Barabara Plaza,
Off Airport South Road,
P. O. Box, 49712 - 00100,
NAIROBI.

KENYA URBAN ROADS AUTHORITY
K U R A
KENYA URBAN ROADS AUTHORITY
Barabara Plaza,
Off Airport South Road,
P. O. Box, 49712 - 00100,
NAIROBI.

FINANCIER:
THE WORLD BANK

PROJECT:
HORN OF AFRICA GATEWAY DEVELOPMENT PROJECT (HOAGDP): -
Consultancy Services for the Design and Works Supervision for the Proposed Extension of Meru Bypass.

CONTRACT NO:
KeNHA/RD/CS/D/4205/2024

CONSULTANT:
egis
One Padmore Place 6th Floor,
George Padmore Road,
P. O. Box, 76672 - 00508,
NAIROBI.

DESIGN DETAILS

Action	Name	Date
Designed By:	C.J	AUG 2025
Drawn By:	C.J	AUG 2025
Checked By:	S.I	AUG 2025
Approved By:	L.R	AUG 2025

DRAWING REVISIONS

No.	Revision Details	Reviewed	Initials	Date	Approved
		By			
		Checked			
		By			
		Checked			
		By			
		Checked			
		By			
		Checked			
		By			
		Checked			

DRAWING TITLE:
SCOUR CHECKS STANDARD DETAILS

DRAWING SCALE:
AS SHOWN

DRAWING NO:
TYP - DRA - 009

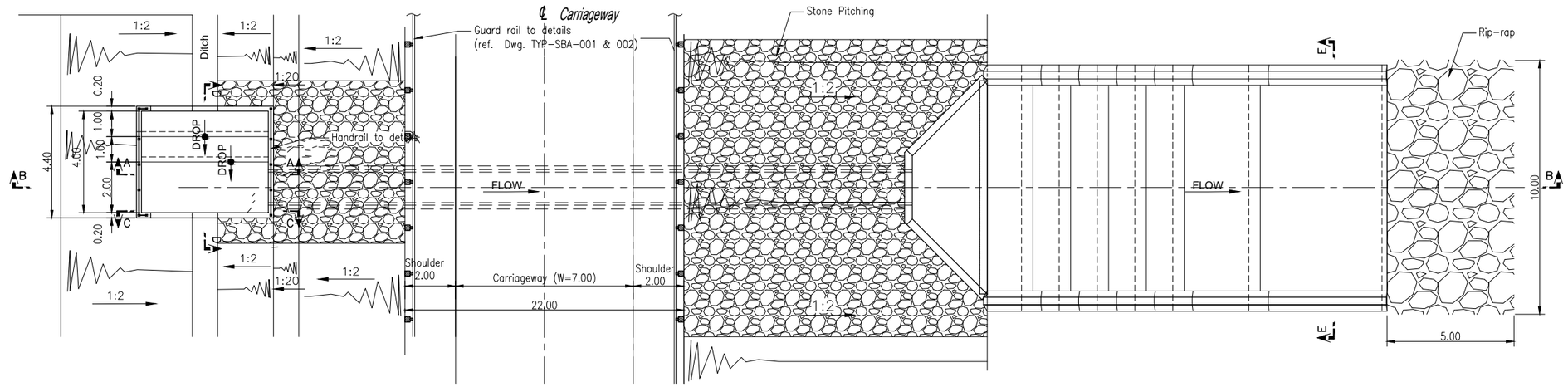

PLAN

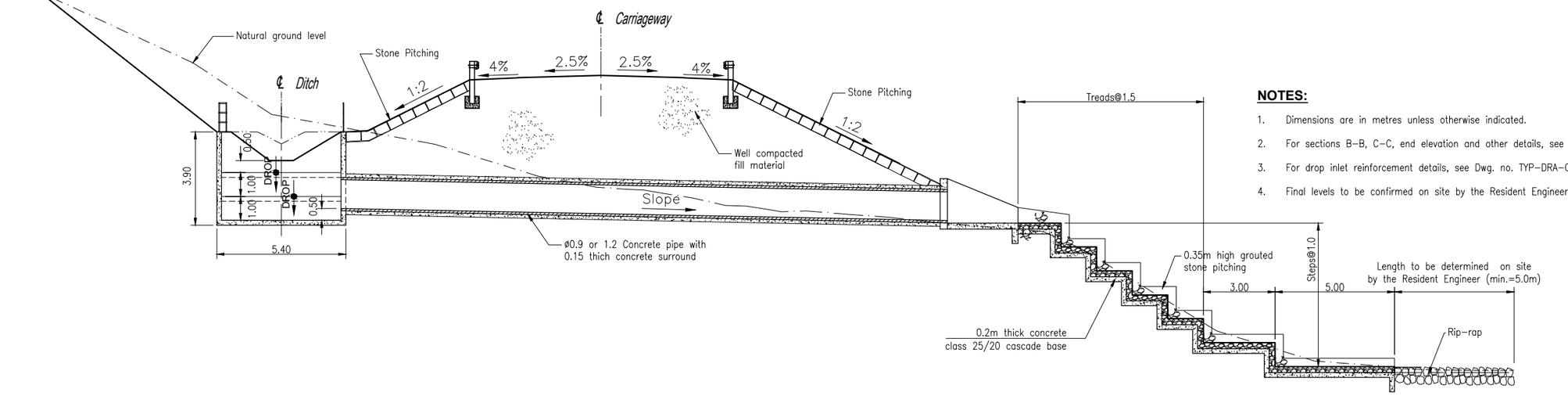

NOTES:

1. Dimensions are in metres unless otherwise indicated.
2. For sections B–B, C–C, end elevation and other details, see Dwg. no. TYP–DRA–011.
3. For drop inlet reinforcement details, see Dwg. no. TYP–DRA–011.
4. Final levels to be confirmed on site by the Resident Engineer.

CLIENT:

KENYA NATIONAL HIGHWAY AUTHORITY
Barabara Plaza,
Off Airport South Road,
P. O. Box, 49712 - 00100,
NAIROBI.

KENYA URBAN ROADS AUTHORITY
Barabara Plaza,
Off Airport South Road,
P. O. Box, 49712 - 00100,
NAIROBI.

FINANCIER:

THE WORLD BANK

PROJECT:

HORN OF AFRICA GATEWAY DEVELOPMENT PROJECT (HOAGDP): -

Consultancy Services for the Design and Works Supervision for the Proposed Extension of Meru Bypass.

CONTRACT NO:

KeNHA/RD/CS/D/4205/2024

CONSULTANT:

egis

One Padmore Place 6th Floor,
George Padmore Road,
P. O. Box, 76672 - 00508,
NAIROBI.

DESIGN DETAILS

Action	Name	Date
Designed By:	C.J	AUG 2025
Drawn By:	C.J	AUG 2025
Checked By:	S.I	AUG 2025
Approved By:	L.R	AUG 2025

DRAWING REVISIONS

No.	Revision Details		Initials	Date	Approved
		By			
		Checked			
		By			
		Checked			
		By			
		Checked			
		By			
		Checked			
		By			
		Checked			

DRAWING TITLE:

TYPICAL CASCADE DETAIL - 1

DRAWING SCALE:

AS SHOWN

DRAWING NO:

TYP - DRA - 010

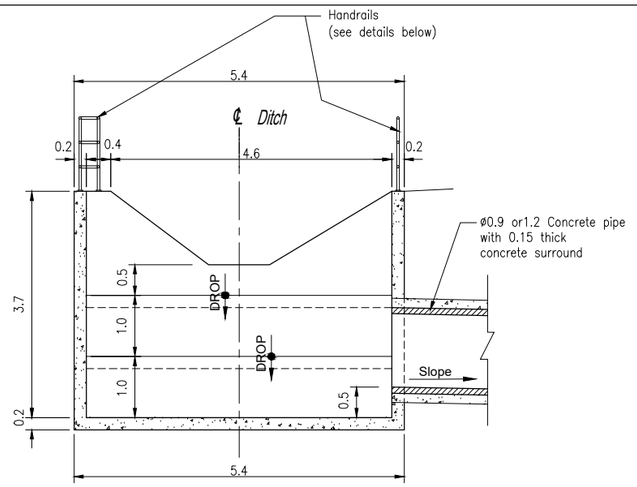

SECTION A-A
Scale 1:50

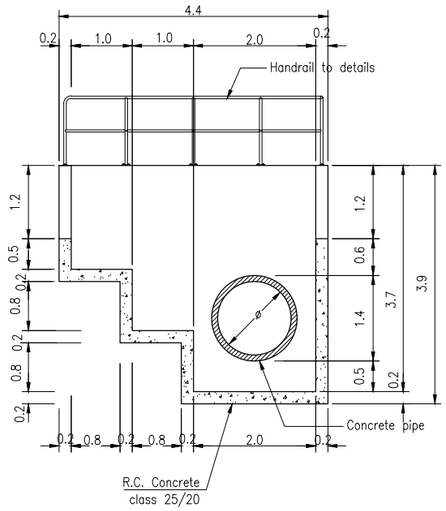

SECTION D - D
Scale 1:50

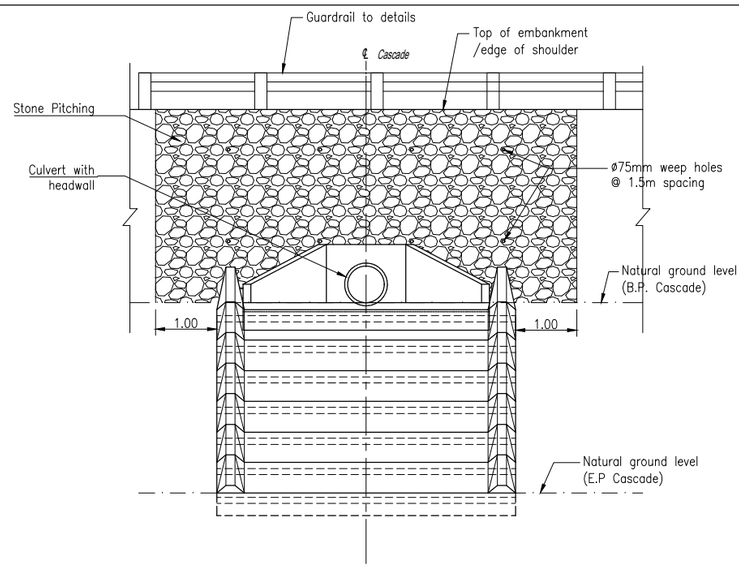

END VIEW
Scale 1:100

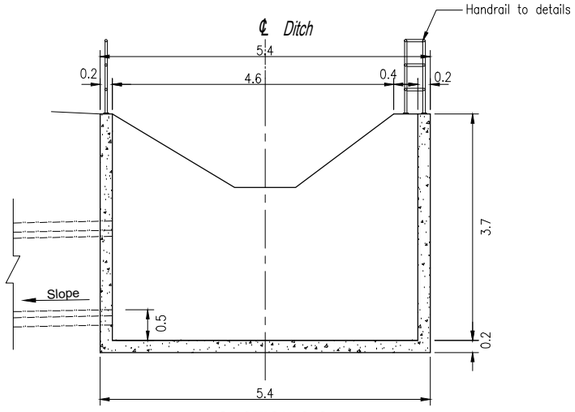

SECTION C-C
Scale 1:50

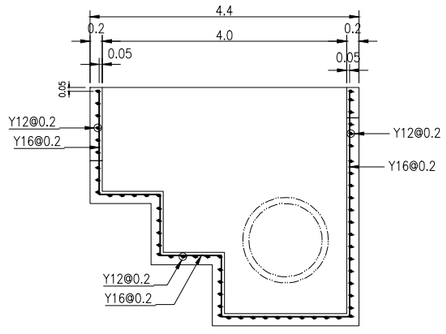

REINFORCEMENT DETAILS
(SECTION D-D)
Scale 1:50

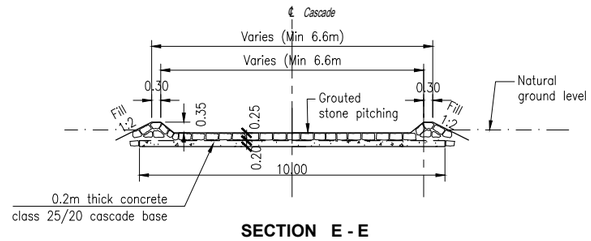

SECTION E - E
Scale 1:100

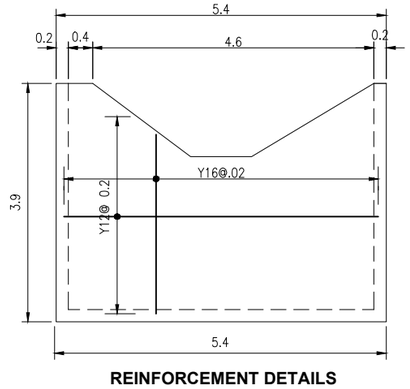

REINFORCEMENT DETAILS
(SECTION A-A & C-C)
Scale 1:50

NOTES:

1. Dimensions are in metres unless otherwise indicated.
2. This Dwg to be read alongside Dwg. no. TYP-DRA-010.
3. Height of stone pitched cascade dwarf wall to be kept at 350mm.
4. Minimum cover to reinforcement to be 50mm.
5. Final levels to be confirmed on site by the Resident Engineer.

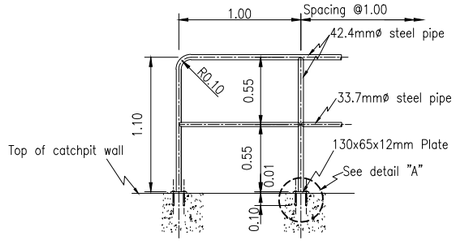

SECTIONAL ELEVATION
Scale 1:25

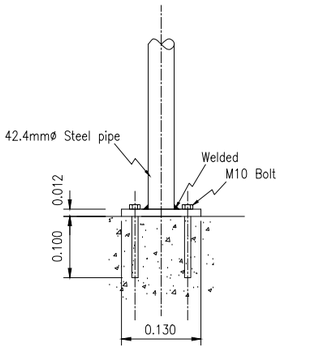

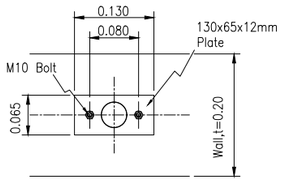

DETAIL "A"
Scale 1:10

HANDRAIL DETAILS

CLIENT:
Kenya National Highways Authority
Quality Highways, Better Connections
KENYA NATIONAL HIGHWAY AUTHORITY
Barabara Plaza,
Off Airport South Road,
P. O. Box, 49712 - 00100,
NAIROBI.

KENYA URBAN ROADS AUTHORITY
KENYA URBAN ROADS AUTHORITY
Barabara Plaza,
Off Airport South Road,
P. O. Box, 49712 - 00100,
NAIROBI.

FINANCIER:
THE WORLD BANK

PROJECT:
HORN OF AFRICA GATEWAY DEVELOPMENT PROJECT (HOAGDP): -
Consultancy Services for the Design and Works Supervision for the Proposed Extension of Meru Bypass.

CONTRACT NO:
KeNHA/RD/CS/D/4205/2024

CONSULTANT:
egis
One Padmore Place 6th Floor,
George Padmore Road,
P. O. Box, 76672 - 00508,
NAIROBI.

DESIGN DETAILS

Action	Name	Date
Designed By:	C.J	AUG 2025
Drawn By:	C.J	AUG 2025
Checked By:	S.I	AUG 2025
Approved By:	L.R	AUG 2025

DRAWING REVISIONS

No.	Revision Details	Reviewed	Initials	Date	Approved
		By			
		Checked			
		By			
		Checked			
		By			
		Checked			
		By			
		Checked			
		By			
		Checked			

DRAWING TITLE:
TYPICAL CASCADE DETAIL - 2

DRAWING SCALE:
AS SHOWN

DRAWING NO:
TYP - DRA - 011

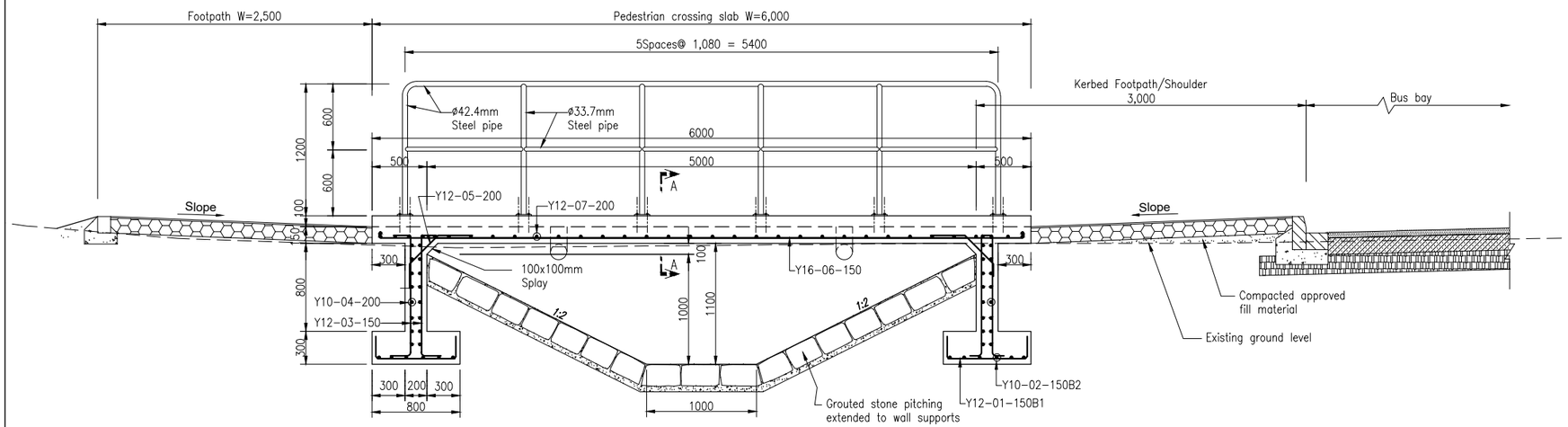

LONGITUDINAL SECTION SHOWING REINFORCEMENT DETAILS -
Scale 1:25

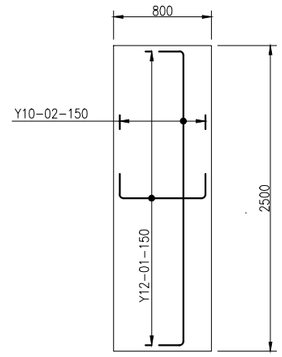

BASE PLAN
Scale 1:25

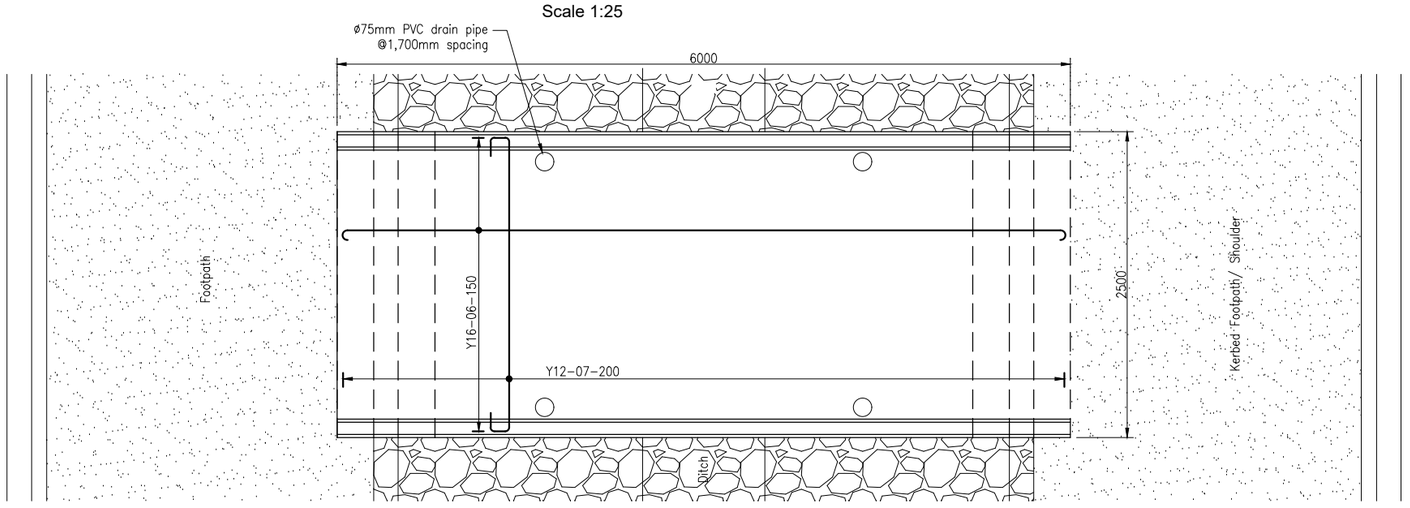

PLAN SHOWING REINFORCEMENT DETAILS - Scale 1:25
(Handrails not shown)

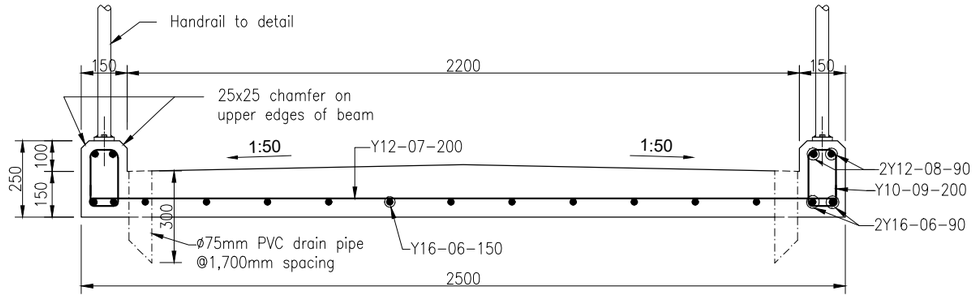

SECTION A-A
Scale 1:10

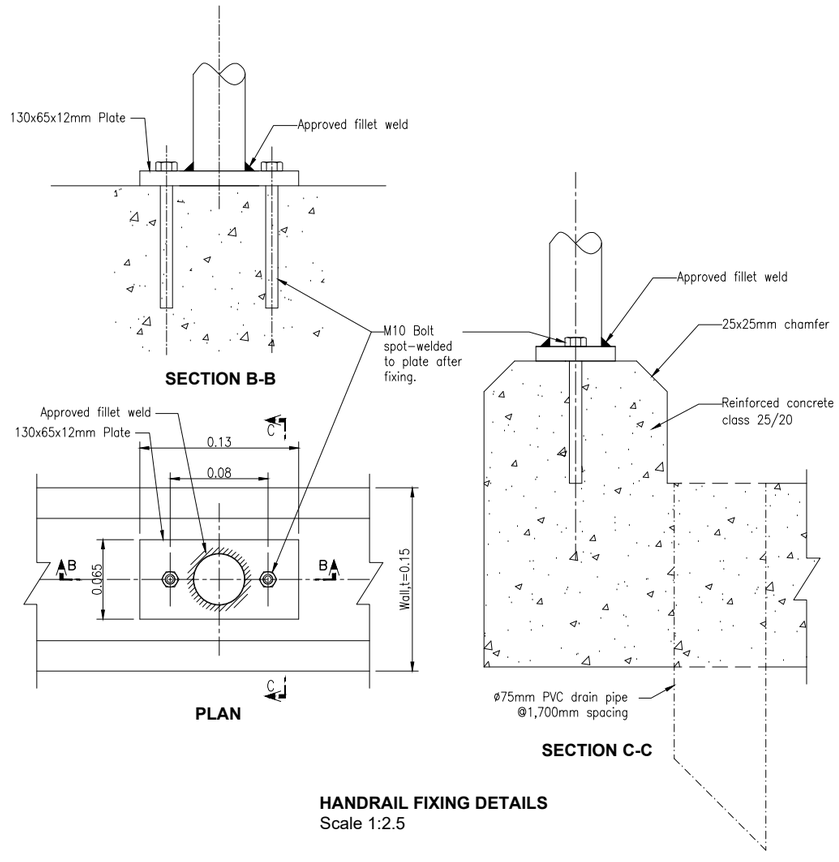

SECTION B-B

PLAN

SECTION C-C

HANDRAIL FIXING DETAILS
Scale 1:2.5

CLIENT:
KENYA NATIONAL HIGHWAY AUTHORITY
Barabara Plaza,
Off Airport South Road,
P. O. Box, 49712 - 00100,
NAIROBI.

KENYA URBAN ROADS AUTHORITY
Barabara Plaza,
Off Airport South Road,
P. O. Box, 49712 - 00100,
NAIROBI.

FINANCIER:
THE WORLD BANK

PROJECT:
HORN OF AFRICA GATEWAY DEVELOPMENT PROJECT (HOAGDP): -
Consultancy Services for the Design and Works Supervision for the Proposed Extension of Meru Bypass.

CONTRACT NO:
KeNHA/RD/CS/D/4205/2024

CONSULTANT:
egis
One Padmore Place 6th Floor,
George Padmore Road,
P. O. Box, 76672 - 00508,
NAIROBI.

DESIGN DETAILS

Action	Name	Date
Designed By:	C.J	AUG 2025
Drawn By:	C.J	AUG 2025
Checked By:	S.I	AUG 2025
Approved By:	L.R	AUG 2025

DRAWING REVISIONS

No.	Revision Details	Reviewed	Initials	Date	Approved
		By			
		Checked			
		By			
		Checked			
		By			
		Checked			
		By			
		Checked			
		By			
		Checked			

DRAWING TITLE:
PEDESTRIAN CROSSING SLAB

DRAWING SCALE:
AS SHOWN

DRAWING NO:
TYP - DRA -12

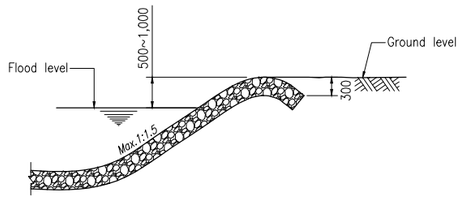

DETAIL 1:
SLOPING EMBANKMENT

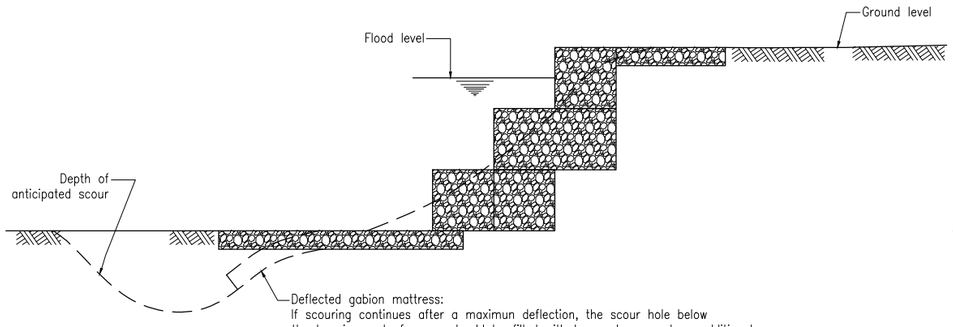

DETAIL 2:
STEPPED EMBANKMENT

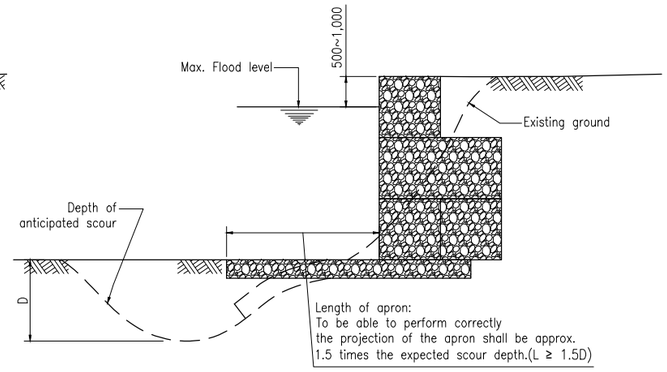

DETAIL 3:
VERTICAL EMBANKMENT

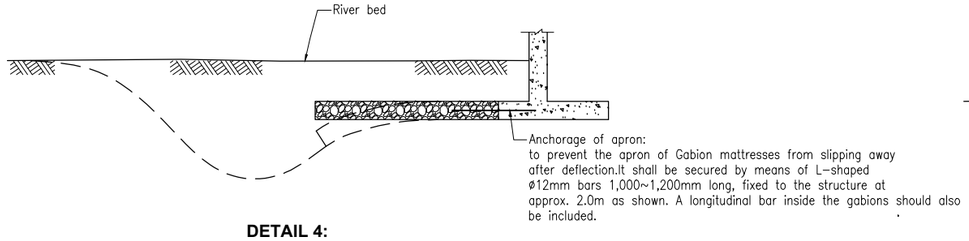

DETAIL 4:
APRON

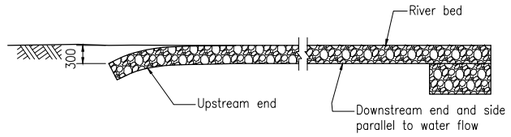

DETAIL 5:
EDGE TREATMENT OF APRONS

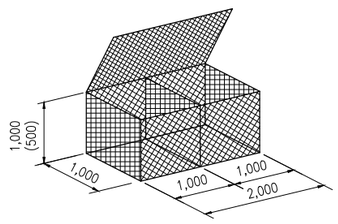

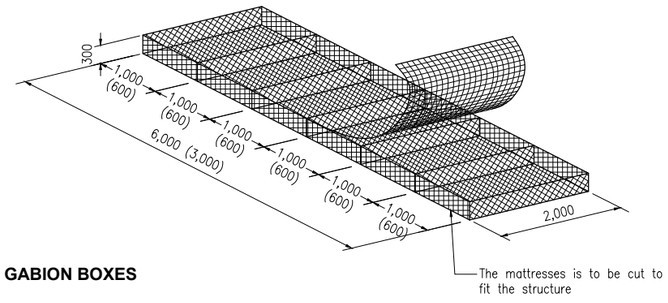

SIZES AND TYPES OF GABION BOXES

NOTES:

1. Dimensions in millimetres unless otherwise indicated.
2. The extension of erosion protection of grouted stone pitching or gabions for the protection of structures and for stabilization of embankments shall be placed where indicated on the drawings as per schedule, or as directed by the Resident Engineer.
3. Gabions shall be made from galvanized steel wire mesh in accordance with clause 711 of the standard specification mesh size shall be 80×100mm.
4. The assembly of gabion boxes and mattresses shall be done according to the manufacturer's instructions.
   Gabion box elements shall be edged with a 4mm dia. wire to give the box stability.
   All wiring shall be done as a continuous lacing operation, not with individual twists at intervals.
   Tightness of the mesh and wiring is essential at all times.
5. The gabion structure shall be formed by wiring the gabion boxes and/or mattresses together, using exactly the same method as for assembling single gabions (see note 3)
   Gabions shall be placed and wired together empty.
6. Fill to gabions is to be placed by hand and stones are to be tightly packed to ensure minimum voids.
   After filling slightly overfull, lids are to be stretched tightly over the filling and wired down.
   The fill shall comply with clause 711 of the standard specification.
7. The ends of a gabion structure must not project into the flow but shall taper smoothly into the bank.
   Where both a vertical wall and a lining are required next to each other, a transition from one form of structure to the other shall be done in in stages. One example is a culvert which has vertical wingwall faces, while the channel up and downstream has a trapezoidal cross-section.
   The gabion wall next to the wingwall shall be vertical (detail 3), but as it proceeds away from the wingwall, steps between the courses of gabion boxes shall be formed and gradually increased in widths untill a slope of say 1:1 is obtained (detail 2). At this point, the retaining wall section changes to a stepped revertment. The revertment is continued with the width of its steps increasing untill a slope of 1:1.5 is reached, at which point the bank is faced with a smooth mattress lining (detail 1).
8). Layout and dimensions will be instructed by the Resident Engineer to suit site conditions.

CLIENT:
KENYA NATIONAL HIGHWAY AUTHORITY
Barabara Plaza,
Off Airport South Road,
P. O. Box, 49712 - 00100,
NAIROBI.

KENYA URBAN ROADS AUTHORITY
Barabara Plaza,
Off Airport South Road,
P. O. Box, 49712 - 00100,
NAIROBI.

FINANCIER:
THE WORLD BANK

PROJECT:
HORN OF AFRICA GATEWAY DEVELOPMENT PROJECT (HOAGDP): -
Consultancy Services for the Design and Works Supervision for the Proposed Extension of Meru Bypass.

CONTRACT NO:
KeNHA/RD/CS/D/4205/2024

CONSULTANT:
egis
One Padmore Place 6th Floor,
George Padmore Road,
P. O. Box, 76672 - 00508,
NAIROBI.

DESIGN DETAILS

Action	Name	Date
Designed By:	C.J	AUG 2025
Drawn By:	C.J	AUG 2025
Checked By:	S.I	AUG 2025
Approved By:	L.R	AUG 2025

DRAWING REVISIONS

No.	Revision Details	Reviewed	Initials	Date	Approved
		By			
		Checked			
		By			
		Checked			
		By			
		Checked			
		By			
		Checked			
		By			
		Checked			

DRAWING TITLE:
GABION PROTECTION

DRAWING SCALE:
AS SHOWN

DRAWING NO:
TYP - DRA - 013

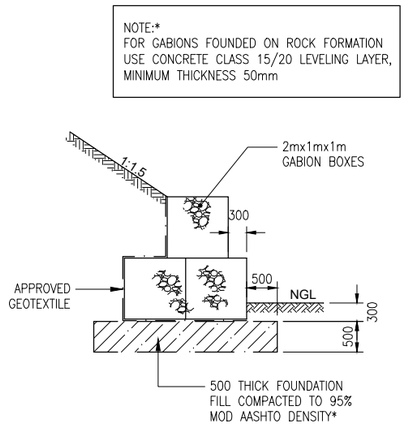

2m GABION WALL

Scale 1:50

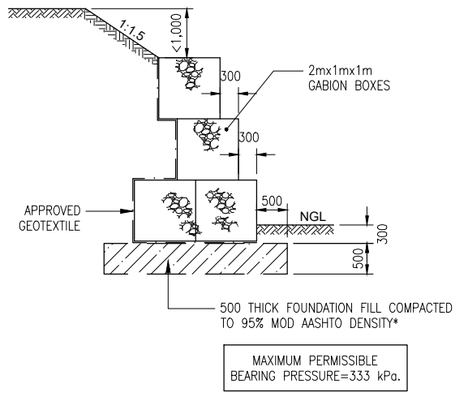

3m GABION WALL: CASE 1

Scale 1:50

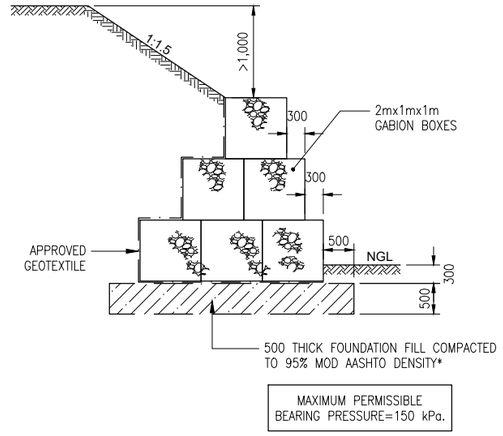

3m GABION WALL: CASE 2

Scale 1:50

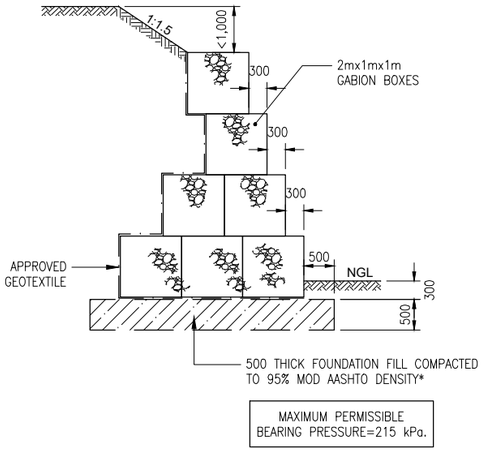

4m GABION WALL

Scale 1:50

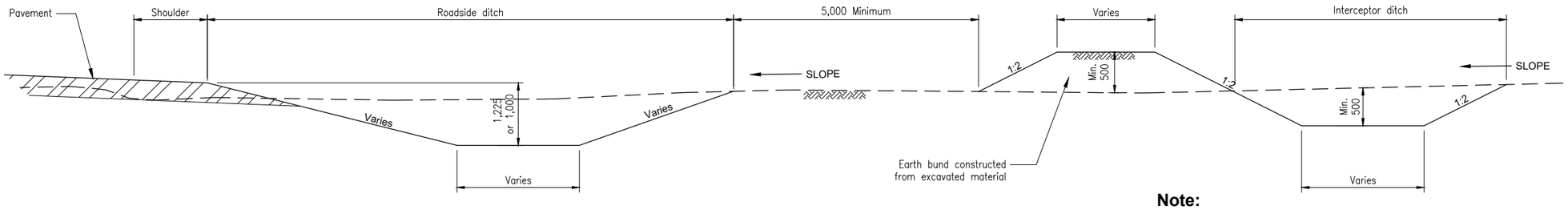

Note:

(1). Dimensions to be instructed by the Resident Engineer to suit site conditions.

TYPICAL CROSS-SECTION SHOWING EARTH BUND INTERCEPTOR DITCH

Scale 1:50

CLIENT:

Kenya National Highways Authority
Quality Highways, Better Connections

KENYA NATIONAL HIGHWAY AUTHORITY
Barabara Plaza,
Off Airport South Road,
P. O. Box, 49712 - 00100,
NAIROBI.

KENYA URBAN ROADS AUTHORITY
Barabara Plaza,
Off Airport South Road,
P. O. Box, 49712 - 00100,
NAIROBI.

FINANCIER:

THE WORLD BANK

PROJECT:

HORN OF AFRICA GATEWAY DEVELOPMENT PROJECT (HOAGDP): -

Consultancy Services for the Design and Works Supervision for the Proposed Extension of Meru Bypass.

CONTRACT NO:

KeNHA/RD/CS/D/4205/2024

CONSULTANT:

egis

One Padmore Place 6th Floor,
George Padmore Road,
P. O. Box, 76672 - 00508,
NAIROBI.

DESIGN DETAILS

Action	Name	Date
Designed By:	C.J	AUG 2025
Drawn By:	C.J	AUG 2025
Checked By:	S.I	AUG 2025
Approved By:	L.R	AUG 2025

DRAWING REVISIONS

No.	Revision Details	Reviewed	Initials	Date	Approved
		By			
		Checked			
		By			
		Checked			
		By			
		Checked			
		By			
		Checked			
		By			
		Checked			

DRAWING TITLE:

CUT - OFF & OUTFALL DRAINAGE AND GABION WALLS.

DRAWING SCALE:

AS SHOWN

DRAWING NO:

TYP - DRA - 014

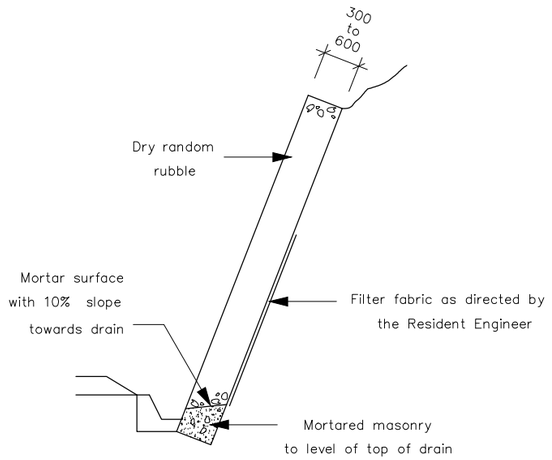

Dry random rubble type
Typical Section

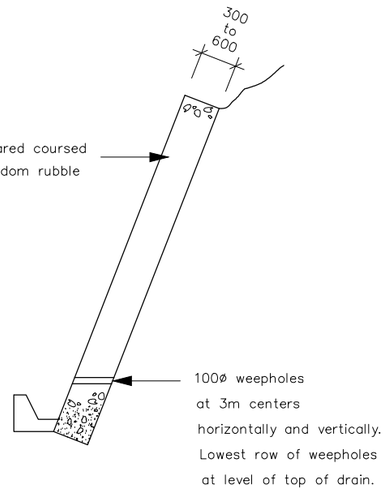

Mortared coursed random rubble type
Typical Section

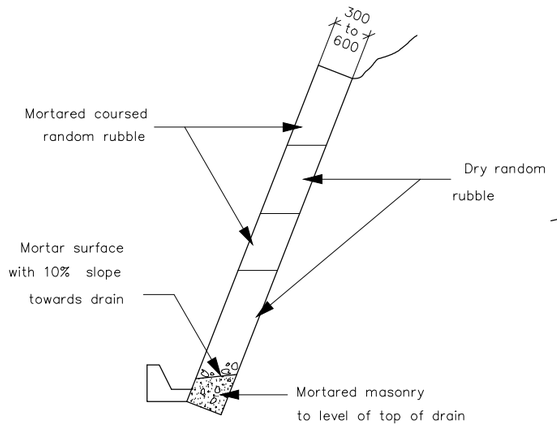

Composite type
Typical Section

TYPE OF REVETMENT

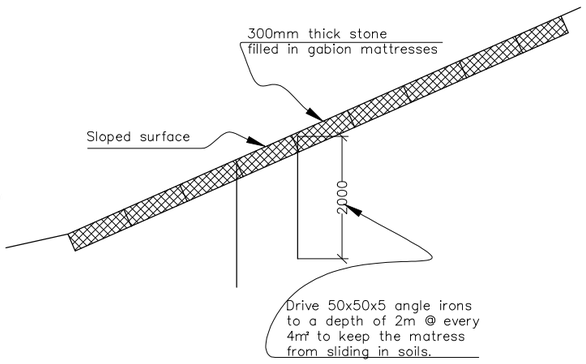

Reno-Mattress Type
Typical Section

TYPICAL SECTION OF MORTARED MASONRY REVETMENT RESTING ON CONCRETE FOOTING, CLASS 30/20

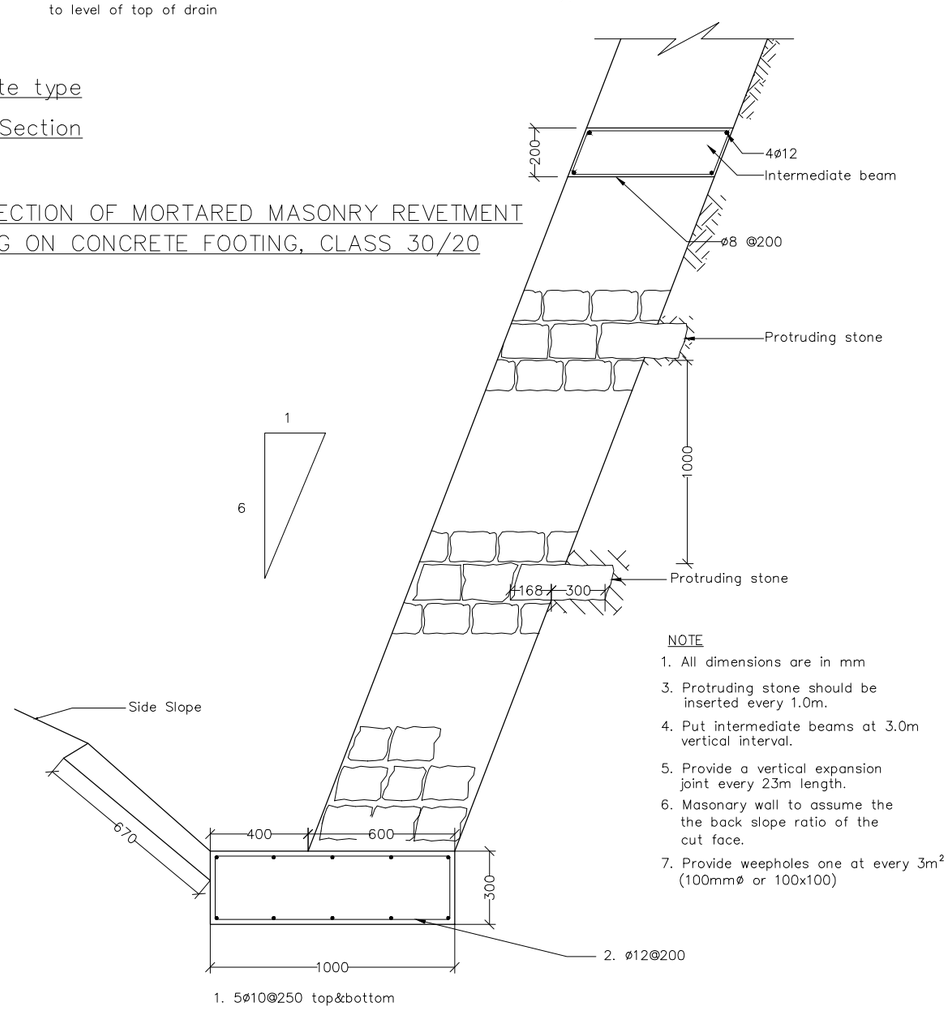

NOTE
1. All dimensions are in mm
3. Protruding stone should be inserted every 1.0m.
4. Put intermediate beams at 3.0m vertical interval.
5. Provide a vertical expansion joint every 23m length.
6. Masonary wall to assume the the back slope ratio of the cut face.
7. Provide weepholes one at every 3m² (100mmø or 100x100)

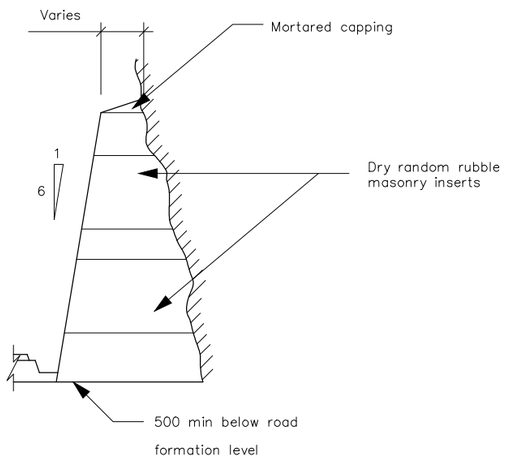

Section A–A

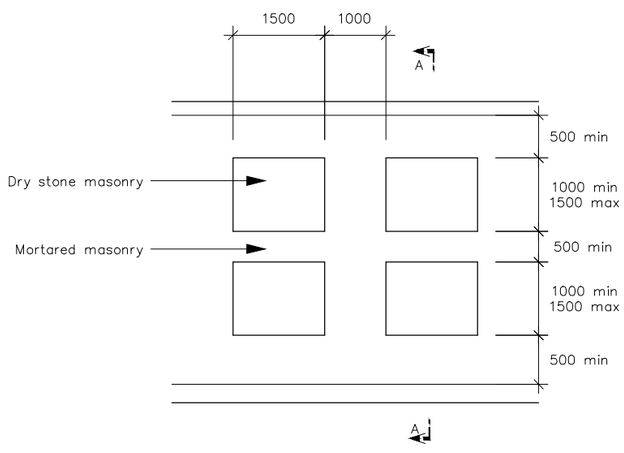

Composite masonry rock face protection wall

Note: –
Wall dimensions to be determined by Resident Engineer to suit site conditions

CLIENT:
KENYA NATIONAL HIGHWAY AUTHORITY
Barabara Plaza,
Off Airport South Road,
P. O. Box, 49712 - 00100,
NAIROBI.

KENYA URBAN ROADS AUTHORITY
Barabara Plaza,
Off Airport South Road,
P. O. Box, 49712 - 00100,
NAIROBI.

FINANCIER:
THE WORLD BANK

PROJECT:
HORN OF AFRICA GATEWAY DEVELOPMENT PROJECT (HOAGDP): -

Consultancy Services for the Design and Works Supervision for the Proposed Extension of Meru Bypass.

CONTRACT NO:
KeNHA/RD/CS/D/4205/2024

CONSULTANT:
egis
One Padmore Place 6th Floor,
George Padmore Road,
P. O. Box, 76672 - 00508,
NAIROBI.

DESIGN DETAILS

Action	Name	Date
Designed By:	C.J	AUG 2025
Drawn By:	C.J	AUG 2025
Checked By:	S.I	AUG 2025
Approved By:	L.R	AUG 2025

DRAWING REVISIONS

No.	Revision Details	Reviewed	Initials	Date	Approved
		By			
		Checked			
		By			
		Checked			
		By			
		Checked			
		By			
		Checked			
		By			
		Checked			

DRAWING TITLE:
REVETMENT STRUCTURES

DRAWING SCALE:
AS SHOWN

DRAWING NO:
TYP - DRA - 015

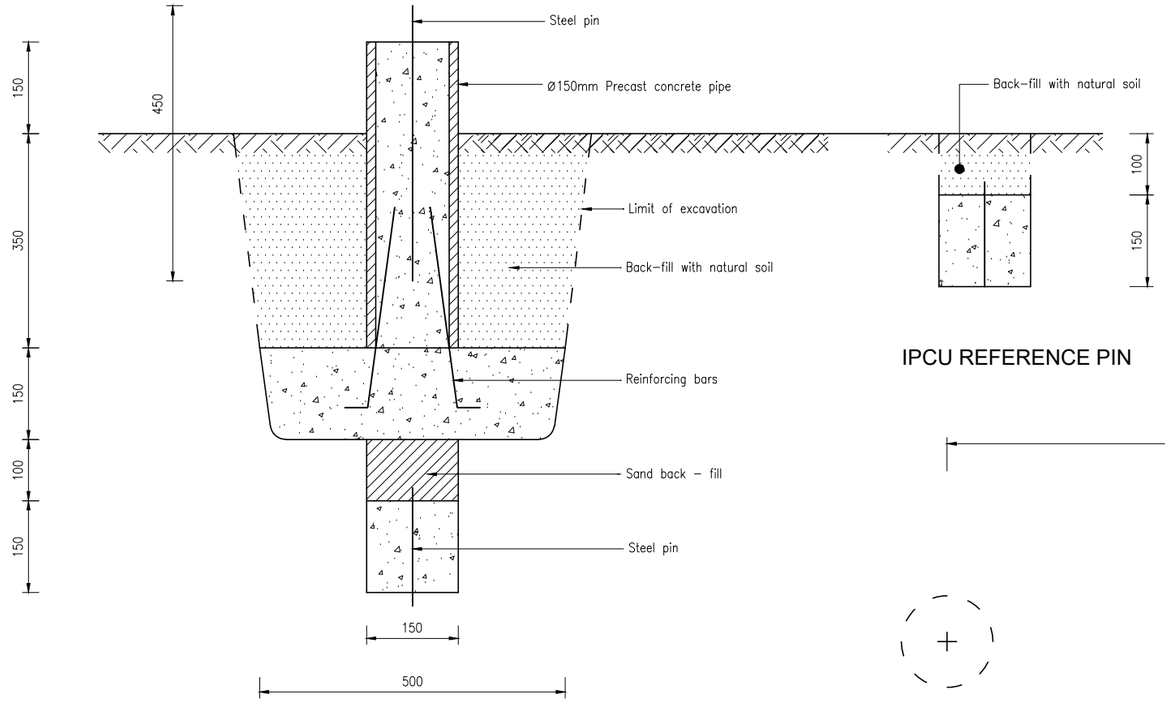

SECTION A-A
Scale 1:10

NOTES
1. Concrete shall be cast insitu in a 100mm augered hole.
2. Augered hole shall extend minimum 400mm below top soil

BENCHMARK
Scale 1:10

IPCU REFERENCE PIN

NOTES
1. All dimensions are in millimetres (mm) unless otherwise stated
2. Concrete shall be made to a mixture of 1:3:6
3. All steel pins and reinforcement bars shall be round 10mm diameter steel rods
4. All backfill of natural soil and sand shall be well compacted
5. All IPCU shall be placed 100mm below ground

LEGEND
- Concrete
- Sand back-fill
- Natural ground
- Back-fill with natural soil

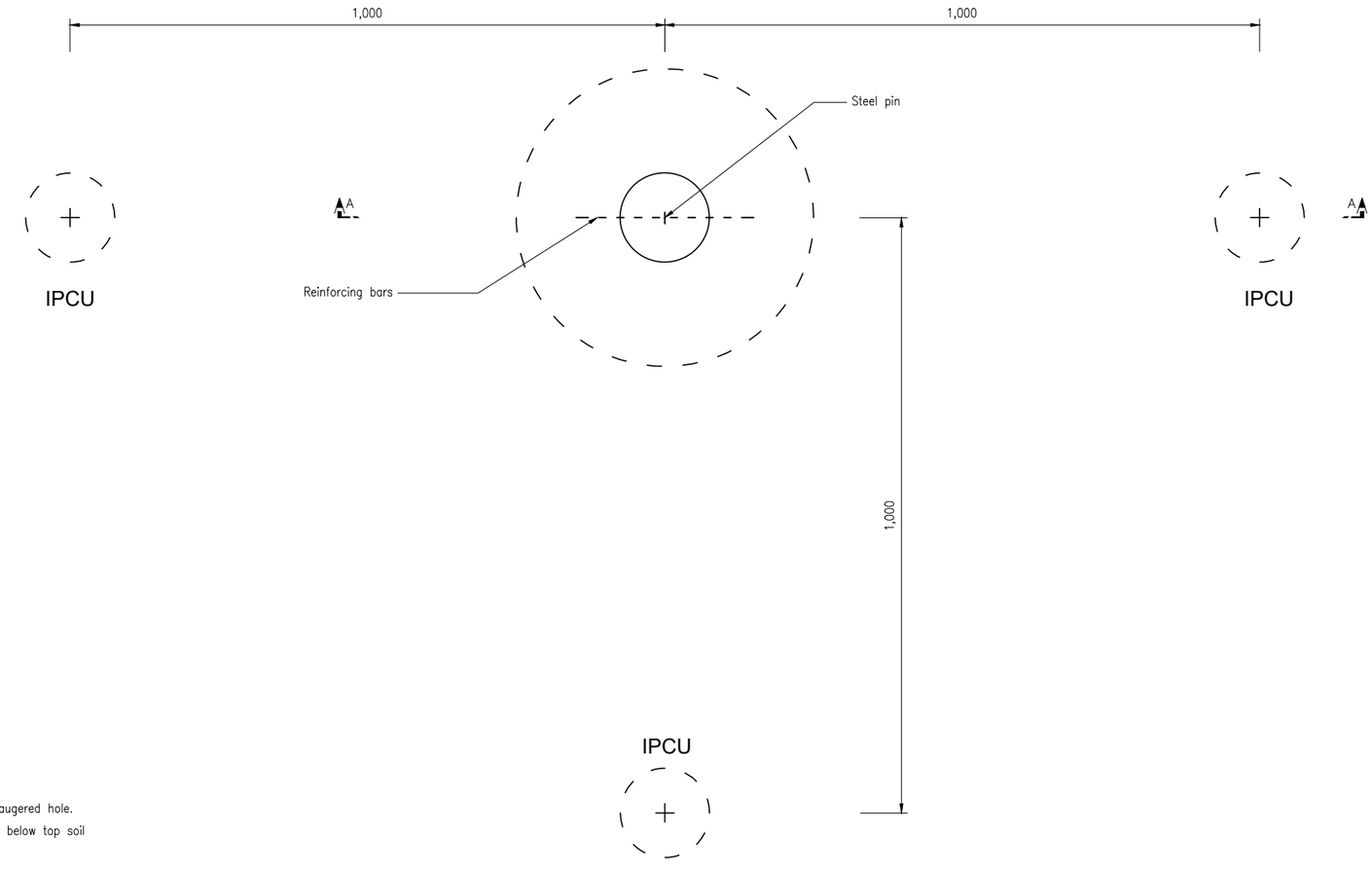

TRIGONOMETRICAL BEACON PLAN
Scale 1:10

CLIENT:
KENYA NATIONAL HIGHWAY AUTHORITY
Barabara Plaza,
Off Airport South Road,
P. O. Box, 49712 - 00100,
NAIROBI.

KENYA URBAN ROADS AUTHORITY
Barabara Plaza,
Off Airport South Road,
P. O. Box, 49712 - 00100,
NAIROBI.

FINANCIER:
THE WORLD BANK

PROJECT:
HORN OF AFRICA GATEWAY DEVELOPMENT PROJECT (HOAGDP): -

Consultancy Services for the Design and Works Supervision for the Proposed Extension of Meru Bypass.

CONTRACT NO:
KeNHA/RD/CS/D/4205/2024

CONSULTANT:
One Padmore Place 6th Floor,
George Padmore Road,
P. O. Box, 76672 - 00508,
NAIROBI.

DESIGN DETAILS		
Action	Name	Date
Designed By:	C.J	AUG 2025
Drawn By:	C.J	AUG 2025
Checked By:	S.I	AUG 2025
Approved By:	L.R	AUG 2025

DRAWING REVISIONS						
No.	Revision Details	Reviewed	Initials	Date	Approved
		By			
		Checked			
		By			
		Checked			
		By			
		Checked			
		By			
		Checked			
		By			
		Checked			

DRAWING TITLE:
REPLACEMENT BENCH MARK & TRIGONOMETRICAL BEACON

DRAWING SCALE:
AS SHOWN

DRAWING NO:
TYP - SIG -001

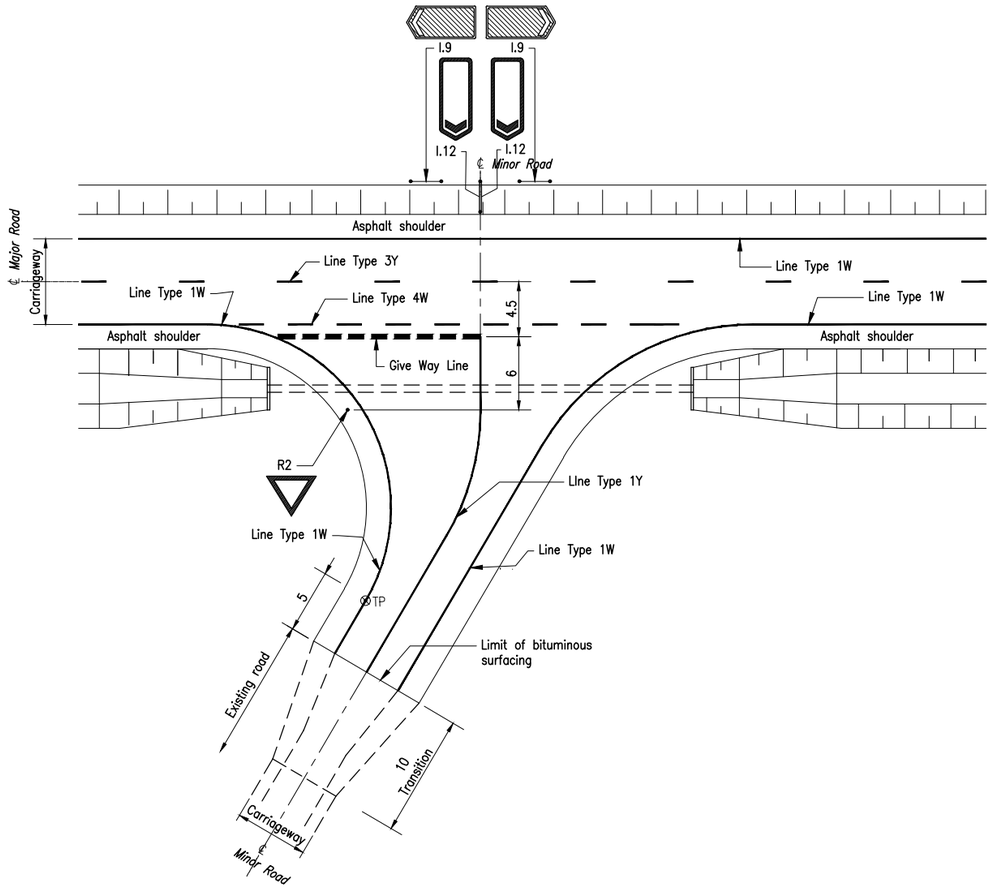

ROAD MARKINGS AND SIGNS LAYOUT AT TYPE C1 JUNCTIONS
Scale 1:250

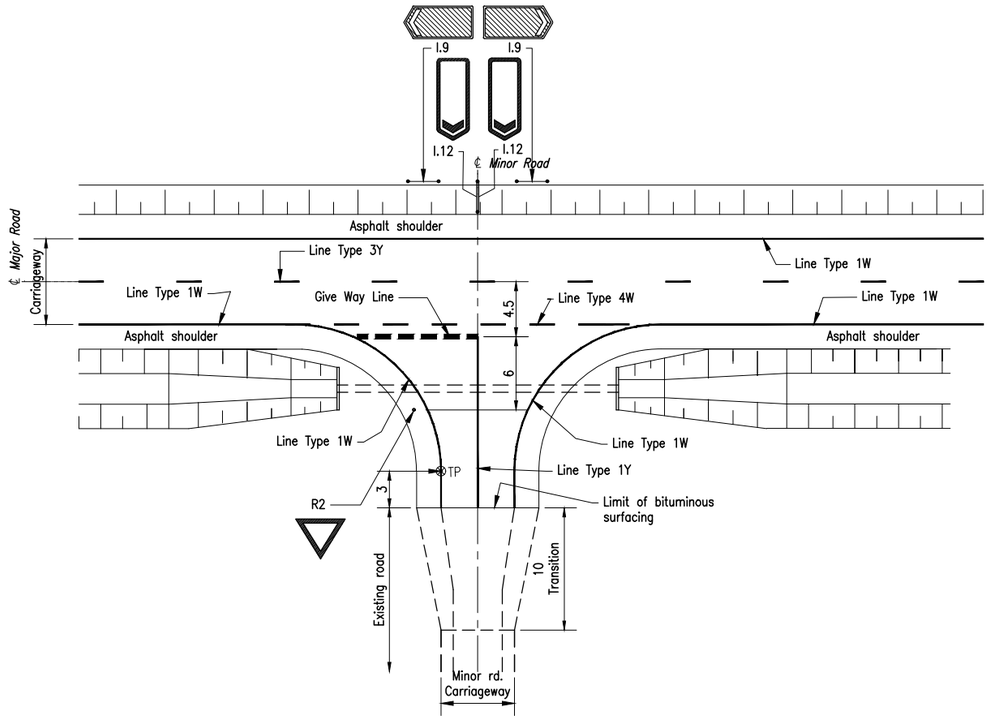

ROAD MARKINGS AND SIGNS MOUNTING AT TYPE C2 JUNCTIONS
Scale 1:250

NOTES:

1. Dimensions and road sign position details are in metres.
2. For layout details of road junction/access types, see Dwg. no. TYP–ALG–003.
3. For standard road marking Line Type details, see Dwg. no. TYP–ALG–006.
4. For road sign details, see Dwg. nos. TYP–SIG–005 – 006.
5. For sign board support and mounting details, see Dwg no. TYP–SIG–003.
6. Sign mounting details at junction type A1 are similar to those at junction type C2, unless otherwise specified by the Resident Engineer

CLIENT:
KENYA NATIONAL HIGHWAY AUTHORITY
Barabara Plaza,
Off Airport South Road,
P. O. Box, 49712 - 00100,
NAIROBI.

KENYA URBAN ROADS AUTHORITY
Barabara Plaza,
Off Airport South Road,
P. O. Box, 49712 - 00100,
NAIROBI.

FINANCIER:
THE WORLD BANK

PROJECT:
HORN OF AFRICA GATEWAY DEVELOPMENT PROJECT (HOAGDP): -

Consultancy Services for the Design and Works Supervision for the Proposed Extension of Meru Bypass.

CONTRACT NO:
KeNHA/RD/CS/D/4205/2024

CONSULTANT:
egis
One Padmore Place 6th Floor,
George Padmore Road,
P. O. Box, 76672 - 00508,
NAIROBI.

DESIGN DETAILS

Action	Name	Date
Designed By:	C.J	AUG 2025
Drawn By:	C.J	AUG 2025
Checked By:	S.I	AUG 2025
Approved By:	L.R	AUG 2025

DRAWING REVISIONS

No.	Revision Details	Reviewed	Initials	Date	Approved
		By			
		Checked			
		By			
		Checked			
		By			
		Checked			
		By			
		Checked			
		By			
		Checked			

DRAWING TITLE:
LAYOUT OF ROAD MARKINGS AND SIGNS AT JUNCTIONS.

DRAWING SCALE:
AS SHOWN

DRAWING NO:
TYP - SIG - 002

DIRECTION AND INFORMATORY SIGN POSTS

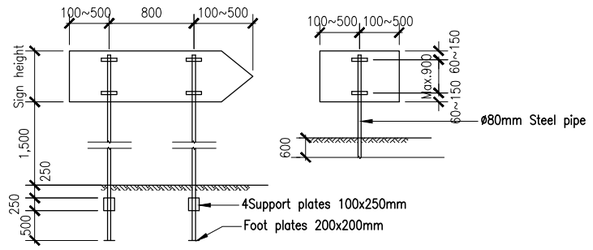

DIRECTION AND PLACE NAME SIGNS - SIGN MOUNTING

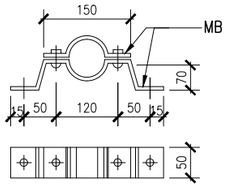

SIGN FIXING DETAIL

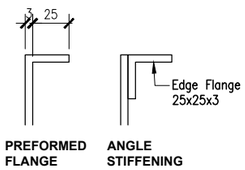

STIFFENING OF SIGN BOARDS

ADVANCED DIRECTION & ROUTE CONFIRMATORY SIGN POSTS

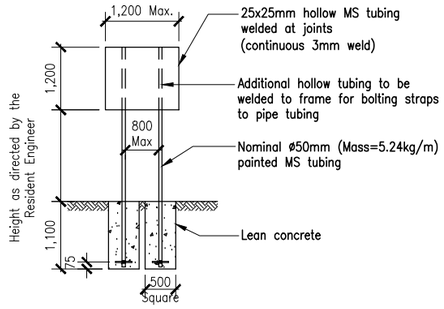

TYPICAL SUPPORT STRUCTURE FOR PERMANENT SIGNPOSTING (AREA OF SIGN > 0.5m² BUT < 1.5m²)

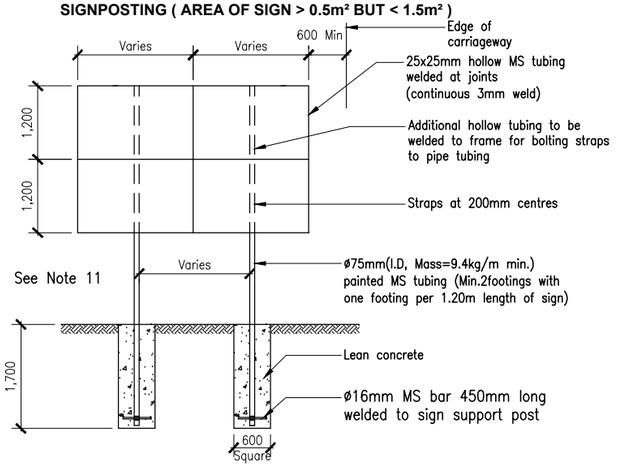

TYPICAL SUPPORT STRUCTURE FOR PERMANENT SIGNPOSTING (AREA OF SIGN > 1.5m²)

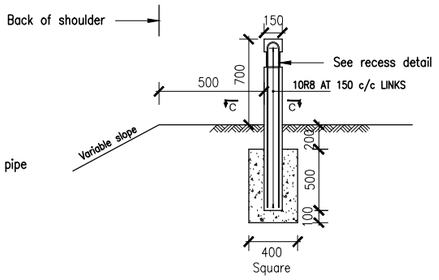

CULVERT MARKER POST

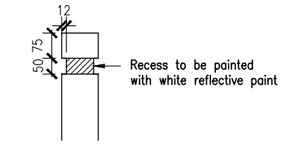

RECESS DETAIL (NTS)

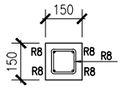

SECTION C-C

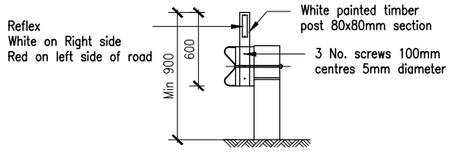

EDGE MARKER POSTS/ GUARDRAIL

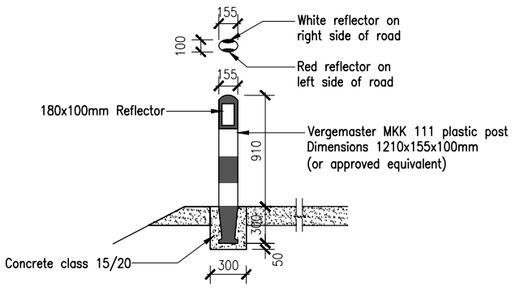

EDGE MARKER POST

KILOMETRE MARKER POSTS

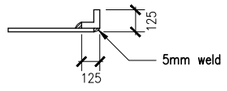

PLAN

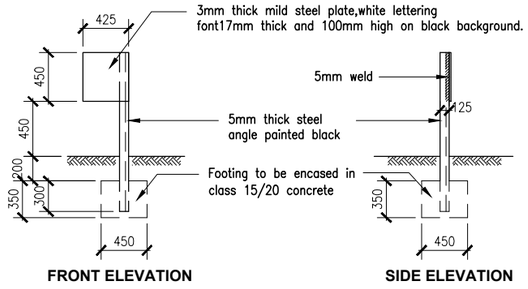

FRONT ELEVATION

SIDE ELEVATION

WARNING AND REGULATORY SIGNS POSTS

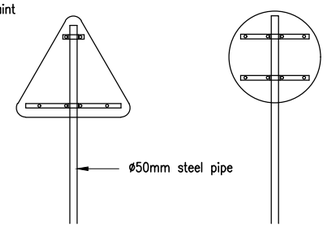

SIGN MOUNTING

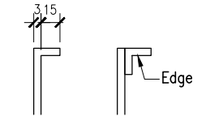

STIFFENING OF SIGNS

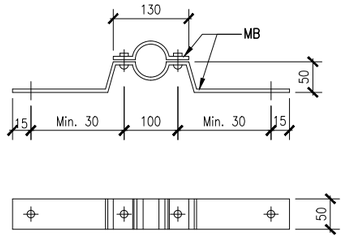

FIXING DETAIL

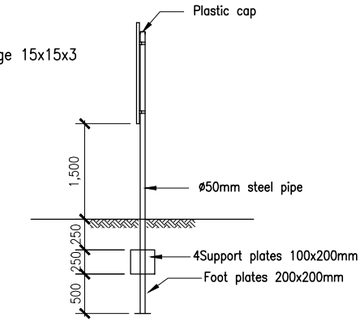

SIGN SUPPORTS

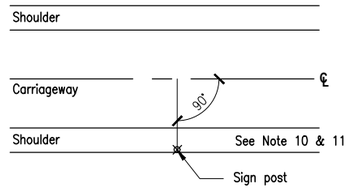

TYPICAL LOCATION

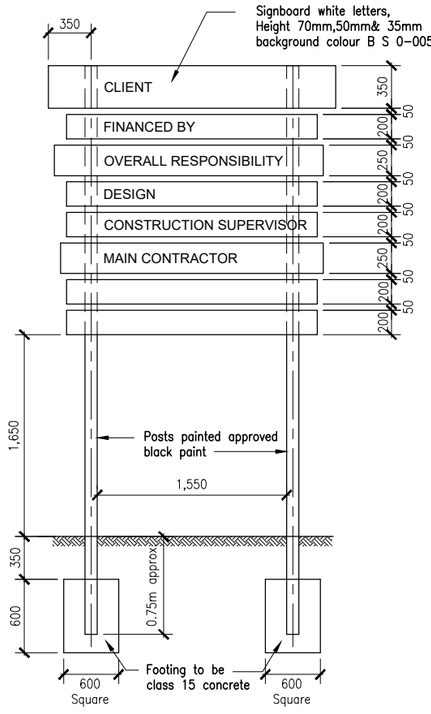

DETAILS FOR CONTRACT SIGNBOARD AND MOUNTING/PLANTING

;NOTES

1. All dimensions are in millimetres
2. Kilometere marker posts to be placed at alternate sides of the road.
3. All sign supports and fittings shall be galvanised steel. The ends of bolts shall be hammered.
4. All White, Yellow, Blue and Red parts on the signs shall be of retro-reflective materials.
5. All signs to be 3mm aluminium plates with reflective face materials.
6. For sign layout and size details refer to DRGS No. TYP-SIG-005 & 006.
7. Edge marker posts shall be placed at every 25m on the outer curveside of each horizontal curve having a radius less than 750m.
8. For single post signs, post to be positioned to obtain a min. clearance of the sign face from the edge of carriageway of 600mm.
9. For multiple post signs the post furthest from carriageway edge to be placed at back of shoulder and remaining posts and sign face to be adjusted as required to obtain minimum sign face clearance from edge of carriagway of 600mm.
10. Contract sign board to be approved by Resident Engineer prior to erection.
11. Road Reserve Boundary posts to be staggered at 200m intervals on either side of the road, or as directed by the R.E.

CLIENT:

Kenya National Highways Authority
Quality Highways, Better Connections

KENYA NATIONAL HIGHWAY AUTHORITY
Barabara Plaza,
Off Airport South Road,
P. O. Box, 49712 - 00100,
NAIROBI.

KENYA URBAN ROADS AUTHORITY
Barabara Plaza,
Off Airport South Road,
P. O. Box, 49712 - 00100,
NAIROBI.

FINANCIER:

THE WORLD BANK

PROJECT:

HORN OF AFRICA GATEWAY DEVELOPMENT PROJECT (HOAGDP): -

Consultancy Services for the Design and Works Supervision for the Proposed Extension of Meru Bypass.

CONTRACT NO:

KeNHA/RD/CS/D/4205/2024

CONSULTANT:

egis

One Padmore Place 6th Floor,
George Padmore Road,
P. O. Box, 76672 - 00508,
NAIROBI.

DESIGN DETAILS

Action	Name	Date
Designed By:	C.J	AUG 2025
Drawn By:	C.J	AUG 2025
Checked By:	S.I	AUG 2025
Approved By:	L.R	AUG 2025

DRAWING REVISIONS

No.	Revision Details	Reviewed	Initials	Date	Approved
		By			
		Checked			
		By			
		Checked			
		By			
		Checked			
		By			
		Checked			

DRAWING TITLE:

SIGN BOARD SUPPORT & MOUNTING AND CONCRETE MARKER POST DETAILS

DRAWING SCALE:

AS SHOWN

DRAWING NO:

TYP - SIG - 003

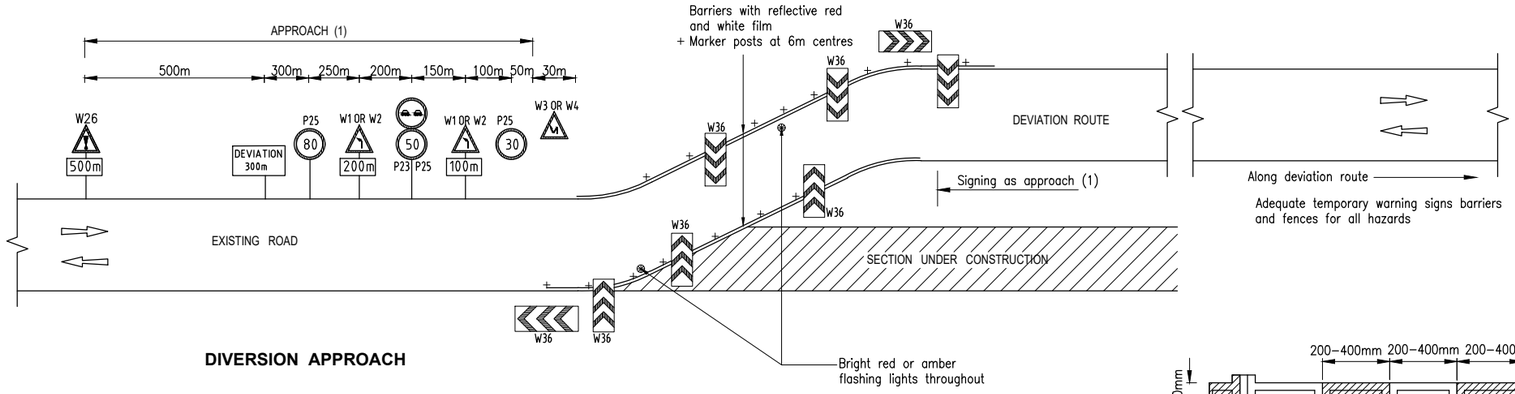

DIVERSION APPROACH

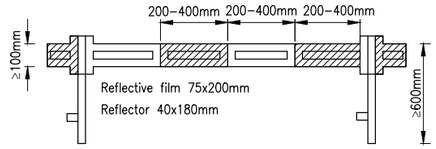

BARRIER

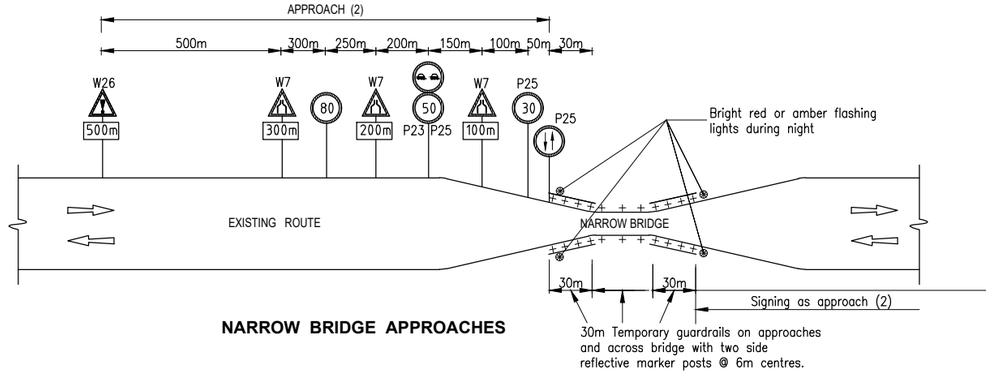

NARROW BRIDGE APPROACHES

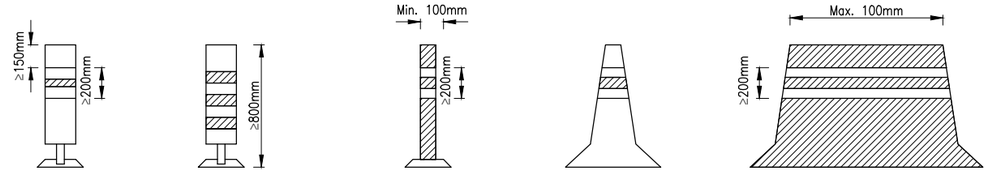

SAFETY POST

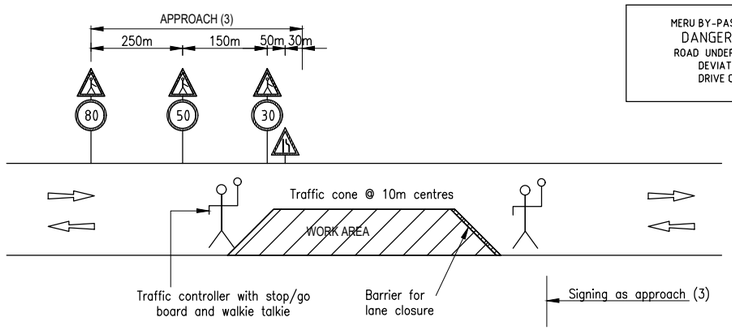

MERU BY-PASS ROAD PROJECT
DANGER ! HATARI !
ROAD UNDER CONSTRUCTION
DEVIATIONS AHEAD
DRIVE CAREFULLY.

TEMPORARY LANE CLOSURES



TRAFFIC CONE

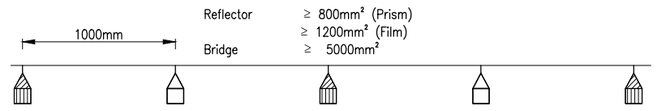

WARNING ROPE
(BETWEEN SAFETY POSTS)

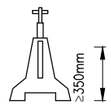

CONCRETE SIGN BASE

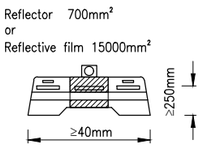

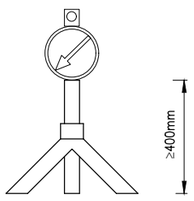

SIGN ON TRIPOD

TYPES OF BARRIERS

:NOTES:

1. All temporary signs must be retro–reflective
2. Numbers, lettering and colours to be in accordance with the Manual of Traffic Signs in Kenya Part II (JUNE 1975)
3. Marker posts to be unbreakable plastic or glass fibre vergemaster or similar
4. All signs must be kept clean and visible at all times.
5. Sketches shown on this drawing are the minimum requirements, signs may be varied or adjusted as directed by the Resident Engineer to suit each particular site
6. Fences and barriers shall be provided as directed by the Resident Engineer to separate pedestrians and traffic where they will need to use road or deviation for access
7. All works and temporary signs are to comply with the requirements of Section 9 of the Standard Specification

CLIENT:

KENYA NATIONAL HIGHWAY AUTHORITY
Barabara Plaza,
Off Airport South Road,
P. O. Box, 49712 - 00100,
NAIROBI.

KENYA URBAN ROADS AUTHORITY
Barabara Plaza,
Off Airport South Road,
P. O. Box, 49712 - 00100,
NAIROBI.

FINANCIER:

THE WORLD BANK

PROJECT:

HORN OF AFRICA GATEWAY DEVELOPMENT PROJECT (HOAGDP): -

Consultancy Services for the Design and Works Supervision for the Proposed Extension of Meru Bypass.

CONTRACT NO:

KeNHA/RD/CS/D/4205/2024

CONSULTANT:

One Padmore Place 6th Floor,
George Padmore Road,
P. O. Box, 76672 - 00508,
NAIROBI.

DESIGN DETAILS

Action	Name	Date
Designed By:	C.J	AUG 2025
Drawn By:	C.J	AUG 2025
Checked By:	S.I	AUG 2025
Approved By:	L.R	AUG 2025

DRAWING REVISIONS

No.	Revision Details	Reviewed	Initials	Date	Approved
		By			
		Checked			
		By			
		Checked			
		By			
		Checked			
		By			
		Checked			
		By			
		Checked			

DRAWING TITLE:

SIGNING ARRANGEMENTS FOR DEVIATIONS

DRAWING SCALE:

AS SHOWN

DRAWING NO:

TYP - SIG -004
1 of 4

TYPICAL LAYOUT FOR THE ACCOMMODATION OF TRAFFIC :

LONG DURATION DIVERSION

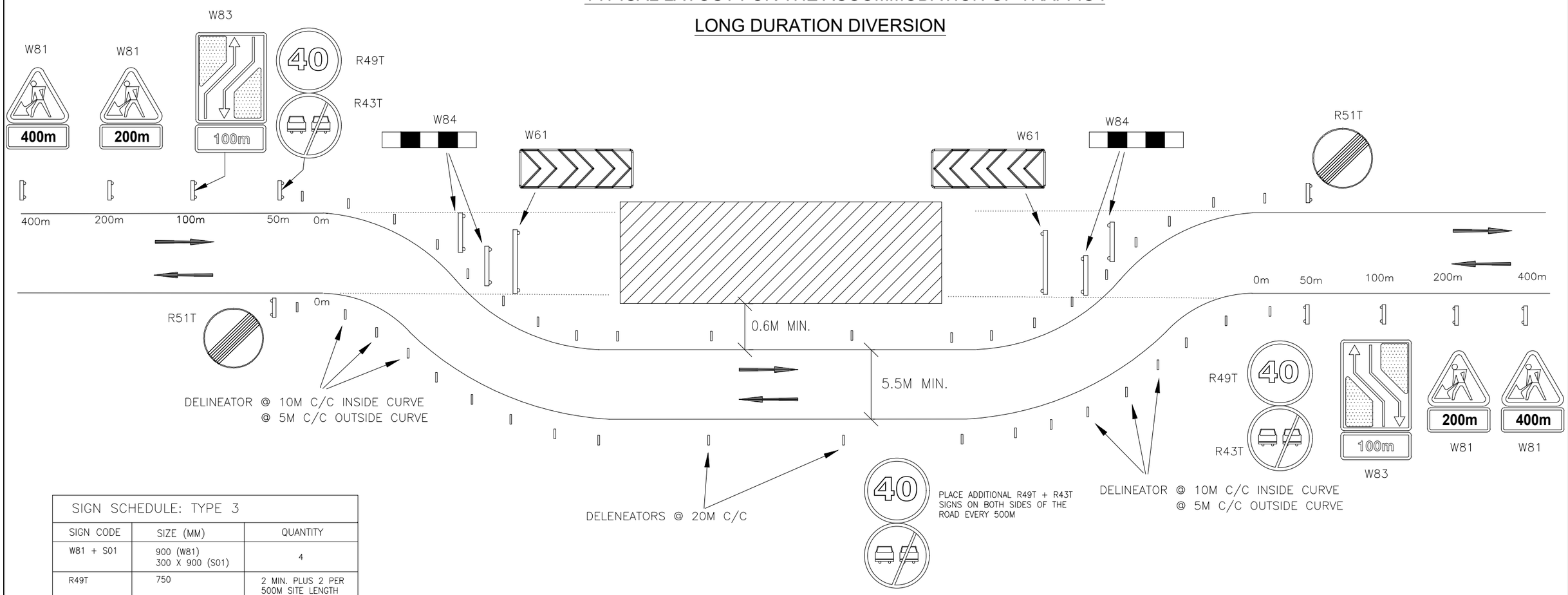

SIGN SCHEDULE: TYPE 3		
SIGN CODE	SIZE (MM)	QUANTITY
W81 + S01	900 (W81) 300 X 900 (S01)	4
R49T	750	2 MIN. PLUS 2 PER 500M SITE LENGTH
R43T	750	2 MIN. PLUS 2 PER 500M SITE LENGTH
R51T	750	2
W83	2000 X 1200	2
W61	600 X 1800	2
W84	400 X 2000	4

CONE/DELINEATOR SCHEDULE: TYPE 3		
ITEM	SIZE (MM)	QUANTITY
DELINEATORS		40 MIN. PLUS 10 PER 100M SITE LENGTH (240 No. FOR 2 Km)
DRUMS		200
PRECAST CONCRETE BARRIER		200

NOTES:

1. DIVERSION ROAD TO BE BUILT TO THE STANDARDS SET OUT IN THE SPECIAL SPECIFICATIONS UNLESS DIRECTED OTHERWISE BY THE RESIDENT ENGINEER. THE PREFERRED MINIMUM RUNNING WIDTH IS 6.5M BUT THIS MAY BE REDUCED TO 5.5M IF THE ROAD IS LIGHTLY TRAFFICKED AND THERE ARE FEW BUSES OR HEAVY GOODS VEHICLES.
2. LENGTH OF DIVERSION NOT TO EXCEED 2KM.
3. IF THE SPEED LIMIT IS WIDELY IGNORED TEMPORARY SPEED HUMPS (100MM HIGH AND 6.5M LONG, WITH W24T SIGNS) SHALL BE INSTALLED AT INTERVALS OF APPROXIMATELY 300M.
4. THE PREFERRED DELINEATION DEVICE IS THE TW DELINEATOR.

GENERAL NOTES:

1. THE CONTRACTOR'S PLAN FOR ACCOMMODATION OF TRAFFIC MUST BE SUBMITTED TO AND APPROVED BY THE RESIDENT ENGINEER BEFORE ANY CONSTRUCTION WORK MAY START.
2. ALL TEMPORARY ROAD SIGNS MUST COMPLY WITH THE REQUIREMENTS OF THE LATEST VERSION OF THE MINISTRY OF WORKS AND TRANSPORT'S TRAFFIC SIGNS MANUAL.
3. ALL WORKERS MUST WEAR HIGH–VISIBILITY VESTS OR JACKETS WHEN ON SITE.
4. ALL TEMPORARY ROAD SIGNS (EXCEPT BARRICADES) SHALL BE FULLY RETROREFLECTIVE AND BE MOUNTED SO THAT THEY ARE PORTABLE BUT STABLE AND NOT EASILY KNOCKED OVER, AND THE LOWEST PART OF THE SIGN PLATE IS A MINIMUM OF 600MM ABOVE THE ROAD SURFACE.
5. EXISTING TRAFFIC SIGNS THAT ARE NOT APPLICABLE MUST BE REMOVED OR COVERED WITH BLACK PLASTIC SHEETING.
6. FLAGMEN MUST BE PROVIDED AT ALL POSITIONS WHERE CONSTRUCTION VEHICLES MAY CROSS THE ROAD, MAKE ANY ABNORMAL TURNS, OR AS INSTRUCTED BY THE RESDIENT ENGINEER.
7. ALL CONSTRUCTION AND PERSONNEL VEHICLES MUST BE PROVIDED WITH AN AMBER FLASHING LIGHT THAT IS PLACED IN SUCH A POSITION THAT IT IS VISIBLE FROM ANY DIRECTION, AND THAT IS SWITCHED ON WHEN THE VEHICLE IS IN MOTION OR STOPPED NEAR TRAFFIC LANES.
8. ALL ROLLERS AND OTHER VEHICLES THAT REVERSE MUST BE FITTED WITH A 'BEEPER' THAT IS AUTOMATICALLY ACTIVATED WHEN REVERSE GEAR IS ENGAGED.
9. EDGE DROPS <200MM WITHIN 3M OF THE CARRIAGEWAY EDGE MUST BE MARKED WITH CONES, OR BARRIER TAPE FIXED TO POLES.
10. EDGE DROPS >200MM BUT <500MM WITHIN 3M OF THE CARRIAGEWAY EDGE MUST BE MARKED WITH DRUMS AT 4M C/C.
11. TRAFFIC MUST BE SHIELDED FROM EDGE DROPS >500MM WITHIN 3M OF THE CARRIAGEWAY EDGE BY SECTIONS OF PRE–CAST CONCRETE BARRIER. CARE SHOULD BE TAKEN TO MINIMISE THE RISK OF VEHICLES HITTING THE END OF THE BARRIER, AND SPEEDS SHOULD BE CONTROLLED TO 40KM/H BY MEANS OF TEMPORARY ROAD HUMPS (100MM HIGH BY 6.5M LONG).

CLIENT:

KENYA NATIONAL HIGHWAY AUTHORITY
Barabara Plaza,
Off Airport South Road,
P. O. Box, 49712 - 00100,
NAIROBI.

KENYA URBAN ROADS AUTHORITY
Barabara Plaza,
Off Airport South Road,
P. O. Box, 49712 - 00100,
NAIROBI.

FINANCIER:

THE WORLD BANK

PROJECT:

HORN OF AFRICA GATEWAY DEVELOPMENT PROJECT (HOAGDP): -

Consultancy Services for the Design and Works Supervision for the Proposed Extension of Meru Bypass.

CONTRACT NO:

KeNHA/RD/CS/D/4205/2024

CONSULTANT:

egis

One Padmore Place 6th Floor,
George Padmore Road,
P. O. Box, 76672 - 00508,
NAIROBI.

DESIGN DETAILS		
Action	Name	Date
Designed By:	C.J	AUG 2025
Drawn By:	C.J	AUG 2025
Checked By:	S.I	AUG 2025
Approved By:	L.R	AUG 2025

DRAWING REVISIONS					
No.	Revision Details	Reviewed	Initials	Date	Approved
		By			
		Checked			
		By			
		Checked			
		By			
		Checked			
		By			
		Checked			
		By			
		Checked			

DRAWING TITLE:

SIGNING ARRANGEMENTS FOR DEVIATIONS.

DRAWING SCALE:

AS SHOWN

DRAWING NO:

TYP - SIG -004
2 of 4

TYPICAL LAYOUT FOR THE ACCOMMODATION OF TRAFFIC : SINGLE LANE WORKING : SHORT DURATION (DAYTIME ONLY)

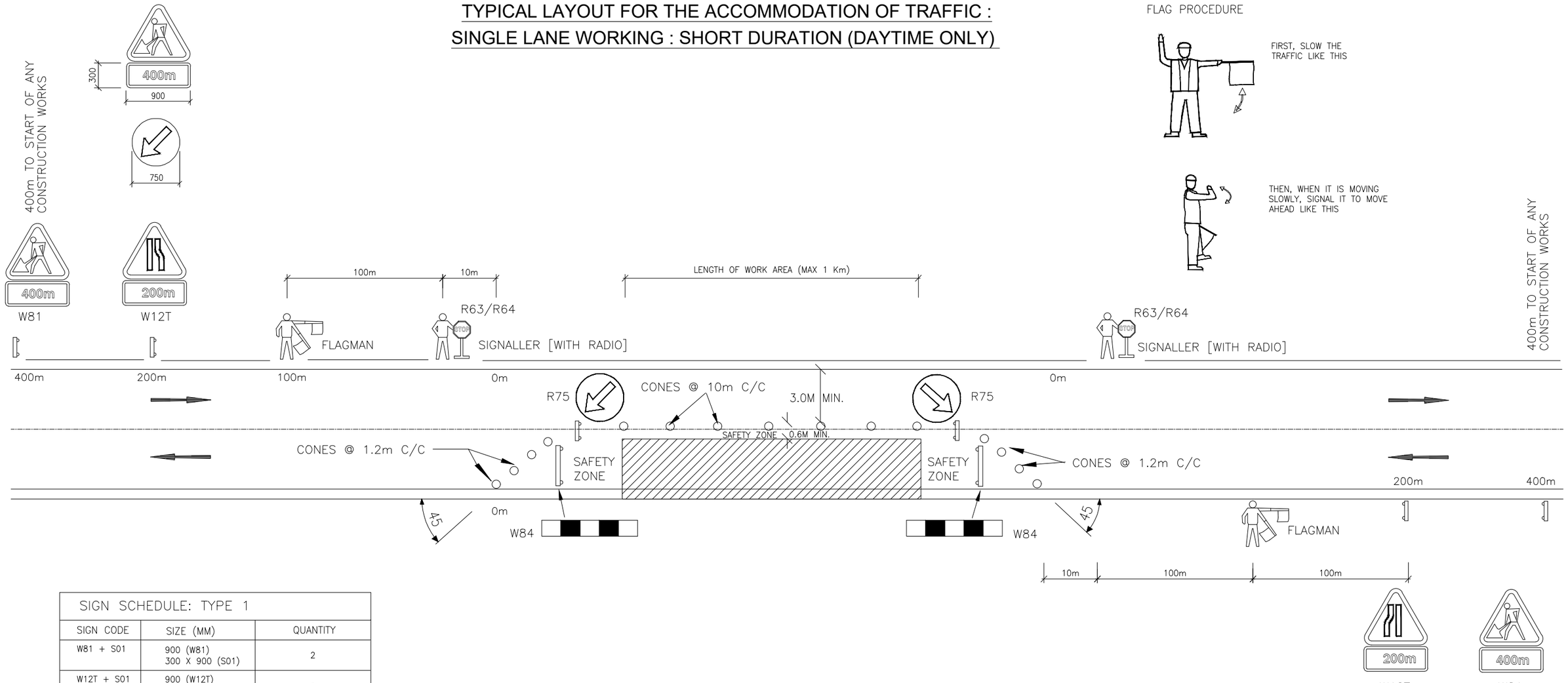

SIGN SCHEDULE: TYPE 1		
SIGN CODE	SIZE (MM)	QUANTITY
W81 + S01	900 (W81) 300 X 900 (S01)	2
W12T + S01	900 (W12T) 300 X 900 (S01)	2
R75	750	2
W84	400 X 2000	2
R63 / R64	750	2

CONE/DELINEATOR SCHEDULE: TYPE 1		
ITEM	SIZE (MM)	QUANTITY
CONES	750	8 MIN. PLUS 10 PER 100M LENGTH OF SINGLE LANE SECTION (108 No. FOR 1 Km)

NOTES:

1. ALL SIGNS MUST BE DISPLAYED DURING DAYTIME AND MUST BE REMOVED DURING NIGHT TIME.
2. LENGTH OF SINGLE LANE SECTION MUST NOT EXCEED 1 KM.
3. IF THE SINGLE LANE SECTION EXTENDS BEYOND 150M AN ADDITIONAL FLAGMAN SHALL BE STATIONED MID–WAY ALONG THE SECTION.
4. DESIRABLE WIDTH OF SINGLE LANE IS 3.25M; ABSOLUTE MINIMUM WIDTH IS 3.0M.

GENERAL NOTES:

1. THE CONTRACTOR'S PLAN FOR ACCOMMODATION OF TRAFFIC MUST BE SUBMITTED TO AND APPROVED BY THE RESIDENT ENGINEER BEFORE ANY CONSTRUCTION WORK MAY START.
2. ALL TEMPORARY ROAD SIGNS MUST COMPLY WITH THE REQUIREMENTS OF THE LATEST VERSION OF THE MINISTRY OF WORKS AND TRANSPORT'S TRAFFIC SIGNS MANUAL.
3. ALL WORKERS MUST WEAR HIGH–VISIBILITY VESTS OR JACKETS WHEN ON SITE.
4. ALL TEMPORARY ROAD SIGNS (EXCEPT BARRICADES) SHALL BE FULLY RETROREFLECTIVE AND BE MOUNTED SO THAT THEY ARE PORTABLE BUT STABLE AND NOT EASILY KNOCKED OVER, AND THE LOWEST PART OF THE SIGN PLATE IS A MINIMUM OF 600MM ABOVE THE ROAD SURFACE.
5. EXISTING TRAFFIC SIGNS THAT ARE NOT APPLICABLE MUST BE REMOVED OR COVERED WITH BLACK PLASTIC SHEETING.
6. FLAGMEN MUST BE PROVIDED AT ALL POSITIONS WHERE CONSTRUCTION VEHICLES MAY CROSS THE ROAD, MAKE ANY ABNORMAL TURNS, OR AS INSTRUCTED BY THE RESDIENT ENGINEER.
7. ALL CONSTRUCTION AND PERSONNEL VEHICLES MUST BE PROVIDED WITH AN AMBER FLASHING LIGHT THAT IS PLACED IN SUCH A POSITION THAT IT IS VISIBLE FROM ANY DIRECTION, AND THAT IS SWITCHED ON WHEN THE VEHICLE IS IN MOTION OR STOPPED NEAR TRAFFIC LANES.
8. ALL ROLLERS AND OTHER VEHICLES THAT REVERSE MUST BE FITTED WITH A 'BEEPER' THAT IS AUTOMATICALLY ACTIVATED WHEN REVERSE GEAR IS ENGAGED.
9. EDGE DROPS <200MM WITHIN 3M OF THE CARRIAGEWAY EDGE MUST BE MARKED WITH CONES, OR BARRIER TAPE FIXED TO POLES.
10. EDGE DROPS >200MM BUT <500MM WITHIN 3M OF THE CARRIAGEWAY EDGE MUST BE MARKED WITH DRUMS AT 4M C/C.
11. TRAFFIC MUST BE SHIELDED FROM EDGE DROPS >500MM WITHIN 3M OF THE CARRIAGEWAY EDGE BY SECTIONS OF PRE–CAST CONCRETE BARRIER. CARE SHOULD BE TAKEN TO MINIMISE THE RISK OF VEHICLES HITTING THE END OF THE BARRIER, AND SPEEDS SHOULD BE CONTROLLED TO 40KM/H BY MEANS OF TEMPORARY ROAD HUMPS (100MM HIGH BY 6.5M LONG).

CLIENT:
KENYA NATIONAL HIGHWAY AUTHORITY
Barabara Plaza,
Off Airport South Road,
P. O. Box, 49712 - 00100,
NAIROBI.

KENYA URBAN ROADS AUTHORITY
Barabara Plaza,
Off Airport South Road,
P. O. Box, 49712 - 00100,
NAIROBI.

FINANCIER:
THE WORLD BANK

PROJECT:
HORN OF AFRICA GATEWAY DEVELOPMENT PROJECT (HOAGDP): -
Consultancy Services for the Design and Works Supervision for the Proposed Extension of Meru Bypass.

CONTRACT NO:
KeNHA/RD/CS/D/4205/2024

CONSULTANT:
egis
One Padmore Place 6th Floor,
George Padmore Road,
P. O. Box, 76672 - 00508,
NAIROBI.

DESIGN DETAILS		
Action	Name	Date
Designed By:	C.J	AUG 2025
Drawn By:	C.J	AUG 2025
Checked By:	S.I	AUG 2025
Approved By:	L.R	AUG 2025

DRAWING REVISIONS						
No.	Revision Details	Reviewed	Initials	Date	Approved	
		By				
		Checked				
		By				
		Checked				
		By				
		Checked				
		By				
		Checked				
		By				
		Checked				

DRAWING TITLE:
SIGNING ARRANGEMENTS FOR DEVIATIONS.

DRAWING SCALE:
AS SHOWN

DRAWING NO:
TYP - SIG -004
3 of 4

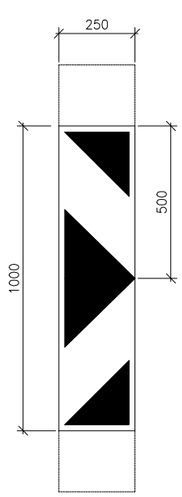

TW401

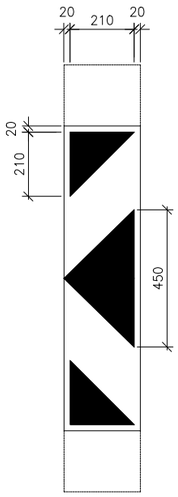

TW402

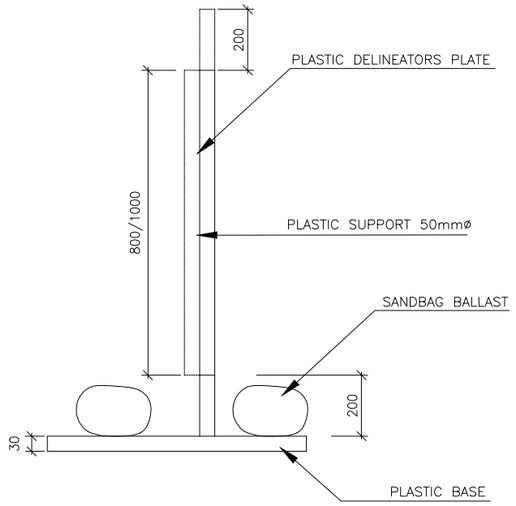

DETAIL E1: TYPICAL MOUNTING SIDE VIEW

SCALE: 1:10

NOTES:

1. DELINEATOR PLATES TW401 AND/OR TW402 MOUNTED AS REQUIRED BY THEIR DESIGN TO PLASTIC SUPPORTS AND BASES BALLASTED BY SANDBAGS, SHALL BE USED TO DEMARCATE WORKING AREAS AND TO DELINEATE CHANGES OF DIRECTION AT ROAD NARROWING, LANE DROPS, CARRIAGEWAY CROSSOVER OR AT DETOURS. STEEL DRUMS SHALL NOT BE USED. RECOMMENDED MINIMUM SPACINGS BETWEEN DELINEATORS ARE GIVEN IN TABLE B1.
2. A DELINEATOR SHALL HAVE A MINIMUM SIZE OF 800mm (H) x 200mm (W) OR 1000mm x 250mm, SIZES MAY BE SPECIFIED. THE RATIO OF HEIGHT TO WIDTH OF 4 TO 1 AND THE PROPORTIONS OF THE BLACK AND YELLOW PATTERN SHALL BE MAINTAINED.
3. MANUFUCTURTING METHODS MAY VARY BUT ALL MATERIALS SHALL BE CHOSEN TO MINIMISE THE RISK OF INJURY AND DAMAGE TO VEHICLES AND PROPERTY. BASE DETAIL ALT. 1 IS SHOWN FOR A CONVENTIONAL POST CONSTRUCTION WHILST DETAIL ALT.2 ALLOWS FOR THE INSERTION OF A CURVED SECTION DELINEATOR PLATE. THE 100mm x 250mm PLATE ILLUSTRATES TYPICAL EXTENSIONS TO FIT AN ALT.2 TYPE BASE. THESE EXTENSIONS SHOULD HAVE A SEMI-MAT BLACK FINISH.
4. SANDGBAG BALLAST SHALL BE A FINE GRADED MATERIAL OF 5mm MAXIMUM SIZE FREE FROM LARGER STONES

TABLE B1: MAXIMUM DELINEATOR SPACING	
CONDITION	SPACING
1 IN 10 TAPER	3m
1 IN 20 TAPER	5m
1 IN 30 TAPER	7m
1 IN 40 TAPER	10m
OUTER CURVES	5m
INNER CURVES	10m
STRAIGHT	20m
END TAPER	5m – 7m

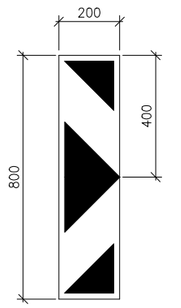

TW401

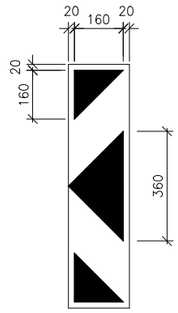

TW402

DETAIL D1: STANDARD DELINEATOR SIZES

SCALE: 1:10

KEY:

YELLOW

BLACK

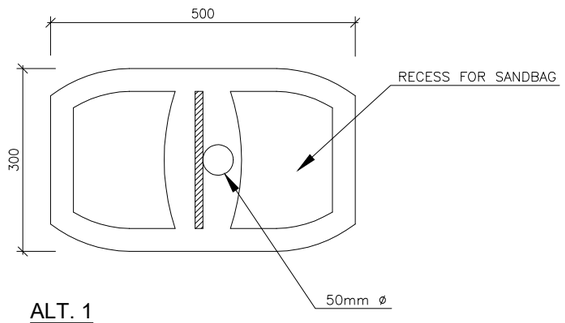

ALT. 1

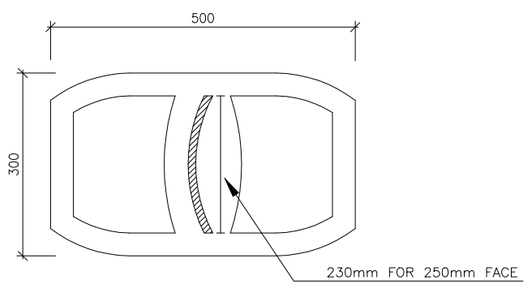

ALT. 2

DETAIL F1: TYPICAL MOUNTING-PLAN

SCALE: 1:5

CLIENT:
KENYA NATIONAL HIGHWAY AUTHORITY
Barabara Plaza,
Off Airport South Road,
P. O. Box, 49712 - 00100,
NAIROBI.

KENYA URBAN ROADS AUTHORITY
Barabara Plaza,
Off Airport South Road,
P. O. Box, 49712 - 00100,
NAIROBI.

FINANCIER:
THE WORLD BANK

PROJECT:
HORN OF AFRICA GATEWAY DEVELOPMENT PROJECT (HOAGDP): -

Consultancy Services for the Design and Works Supervision for the Proposed Extension of Meru Bypass.

CONTRACT NO:
KeNHA/RD/CS/D/4205/2024

CONSULTANT:
egis
One Padmore Place 6th Floor,
George Padmore Road,
P. O. Box, 76672 - 00508,
NAIROBI.

DESIGN DETAILS

Action	Name	Date
Designed By:	C.J	AUG 2025
Drawn By:	C.J	AUG 2025
Checked By:	S.I	AUG 2025
Approved By:	L.R	AUG 2025

DRAWING REVISIONS

No.	Revision Details	Reviewed	Initials	Date	Approved
		By			
		Checked			
		By			
		Checked			
		By			
		Checked			
		By			
		Checked			
		By			
		Checked			

DRAWING TITLE:
SIGNING ARRANGEMENTS FOR DEVIATIONS.

DRAWING SCALE:
AS SHOWN

DRAWING NO:
TYP - SIG -004
4 of 4

CASE I : HORIZONTAL W/ ROADWAY SURCHARGE OR SLOPING BACKFILL TO 2:I(H:V)

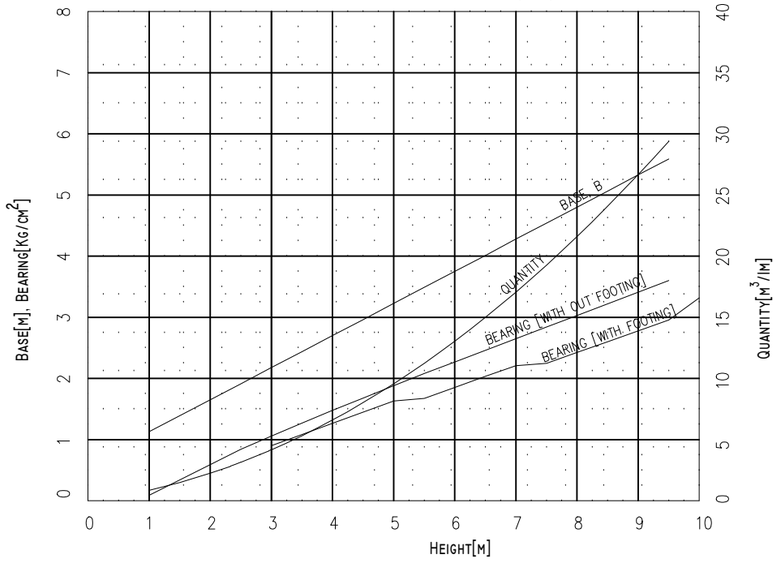

CASE II : SLOPING BACKFILL >2:I UP TO I:I (H:V)

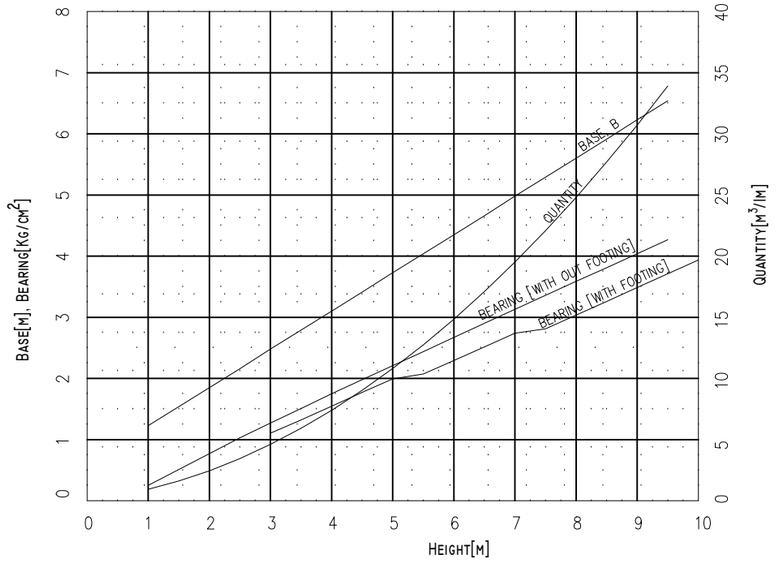

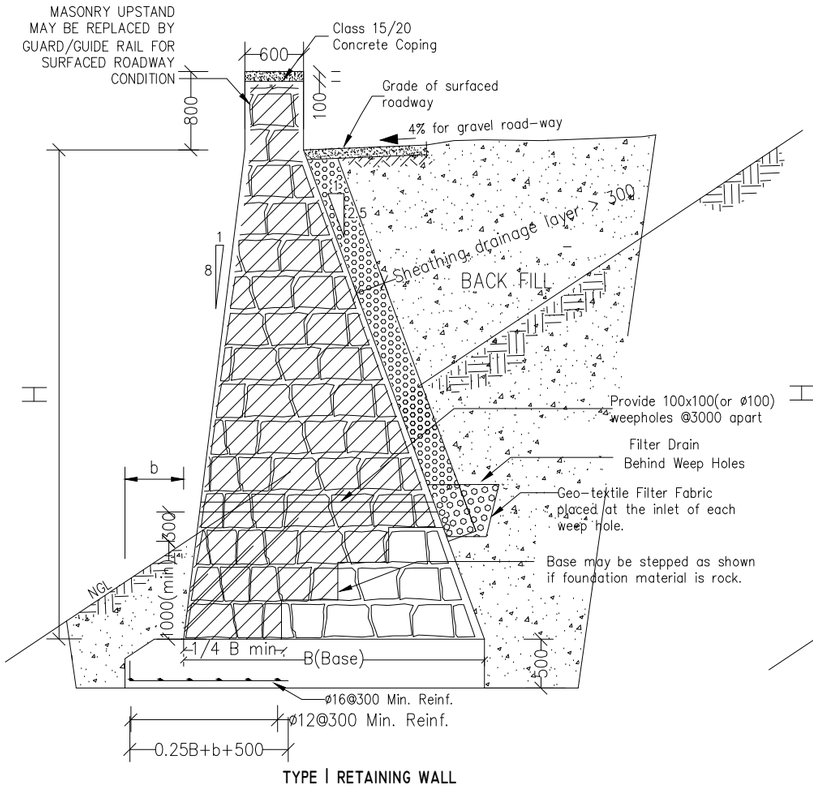

TYPE I RETAINING WALL

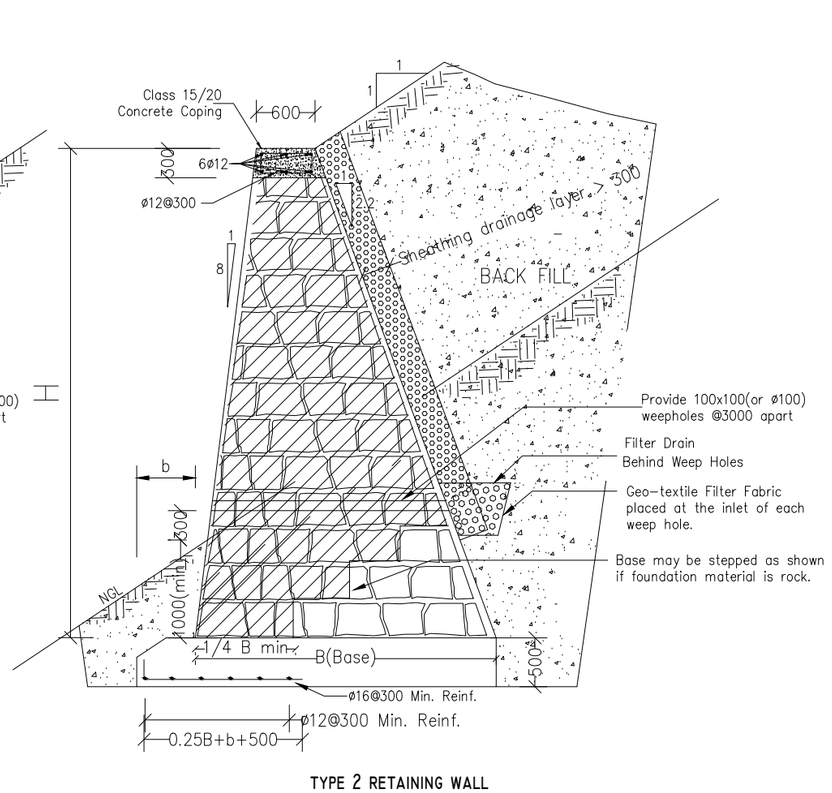

TYPE 2 RETAINING WALL

GENERAL NOTES

(1) DESIGN DATA:

Weight of masonry	2700Kg/m^3
Weight of fill	1600Kg/m^3
Surcharge of 0.6m	11.53Kpa
Fluid pressure	528Kg/m^3 for horizontal fill
Fluid pressure	656Kg/m^3 for sloping fill

(2) CONSTRUCTION SPECIFICATIONS:–Standard Specifications, section 7.

(3) WALL HEIGHT:– shall be limited in accordance with the allowable bearing pressure, which may be taken as :–

Stiff Clay	2.50Kg/cm^2 (250KPa)
Dense Sand	2.80Kg/cm^2 (280KPa)
Weathered rock,Boulders or conglamorate	5.00Kg/cm^2 (500KPa)

Other presumptive bearing pressure are given in AASHTO standard specification for highway bridges 16 edition 1996 section 4.11.4.1.4–1 other wise the footing depth & base width are to be as directed by the Resident Engineer.

(4) SAFE BEARING CAPACITY:–As an alternative if a safe bearing capacity is not encountered at the required depth,a nominally reinforced class 30/20 concrete base may be used to reduce the toe pressure to a safe value as shown on the graph.

(5) SUPPLEMENTAL CONSTRUCTION REQUIREMENTS:–All stones must be thoroughly wetted with water before placing. The top surfaces of masonry beds shall be kept free of mortar spillage,and wetted before placing mortar for the next bed of stones.All mortar shall be placed with a trowel.Dumping of mortar on masonry beds from buckets or other containers shall not be permitted under any circumstances.The excessive use of stone fragements for filling voids shall not be permitted.

(6) COMPACTION OF BACK FILL:–Backfill material shall be mechanically compacted in horizontal layers not exceeding 15cm in depth to top of walls.Material above top of wall shall be compacted as specified for embankment.

(7) STONE OR GRAVEL SHEATHING:–Place 0.30m stone or gravel sheathing to 0.30m below weepholes.Material to conform to requirements of Clause 814 of the Standard Specfication.

(8) DIMENSIONS:– All measurements are in mm unless otherwise specified.

(10) WALL CONSTRUCTION/MOVEMENT JOINNTS:– to be located at maximum 9.0m intervals longitudinally.

(11) GAP: – The joint gap between adjacent wall sections shall be 25–30mm.

(12) FILTER FABRIC:– At the rear of the wall, prior to backfilling, a strip of filter fabric (grade 150 g/m2, non–rotting) is to be fixed, straddling each joint, to prevent washing away of soil through the joint.The width of filter fabric shall be 600mm minimum and shall be fixed the full height of the wall.

(13) FOUNDATION WALL STEPS:– The Contractor is required to design the arrangement of steps in the wall foundation and to obtain approval of his design from the Resident Engineer, prior to any task connected with the construction of the wall taking place.

(14) NOTICE:– A minimum of 14 days notice is to be given to the Resident Engineer ahead of commencement of construction of the wall.

(15) APPROVAL OF DESIGN & WORKING METHOD:– Approval of the design of the wall steps is to be sought by submission of detailed drawings showing the proposed stepping arrangement together with the proposed method of working.

H	3 – 5	5.1 – 7	>7⩽10
b	300	400	500

CLIENT:

Kenya National Highways Authority
Quality Highways, Better Connections

KENYA NATIONAL HIGHWAY AUTHORITY
Barabara Plaza,
Off Airport South Road,
P. O. Box, 49712 - 00100,
NAIROBI.

KENYA URBAN ROADS AUTHORITY
Barabara Plaza,
Off Airport South Road,
P. O. Box, 49712 - 00100,
NAIROBI.

FINANCIER:

THE WORLD BANK

PROJECT:

HORN OF AFRICA GATEWAY DEVELOPMENT PROJECT (HOAGDP): -

Consultancy Services for the Design and Works Supervision for the Proposed Extension of Meru Bypass.

CONTRACT NO:

KeNHA/RD/CS/D/4205/2024

CONSULTANT:

egis

One Padmore Place 6th Floor,
George Padmore Road,
P. O. Box, 76672 - 00508,
NAIROBI.

DESIGN DETAILS

Action	Name	Date
Designed By:	C.J	AUG 2025
Drawn By:	C.J	AUG 2025
Checked By:	S.I	AUG 2025
Approved By:	L.R	AUG 2025

DRAWING REVISIONS

No.	Revision Details	Reviewed	Initials	Date	Approved
		By			
		Checked			
		By			
		Checked			
		By			
		Checked			
		By			
		Checked			
		By			
		Checked			

DRAWING TITLE:

STONE MASONRY RETAINING WALL

DRAWING SCALE:

AS SHOWN

DRAWING NO:

TYP - STC - 001

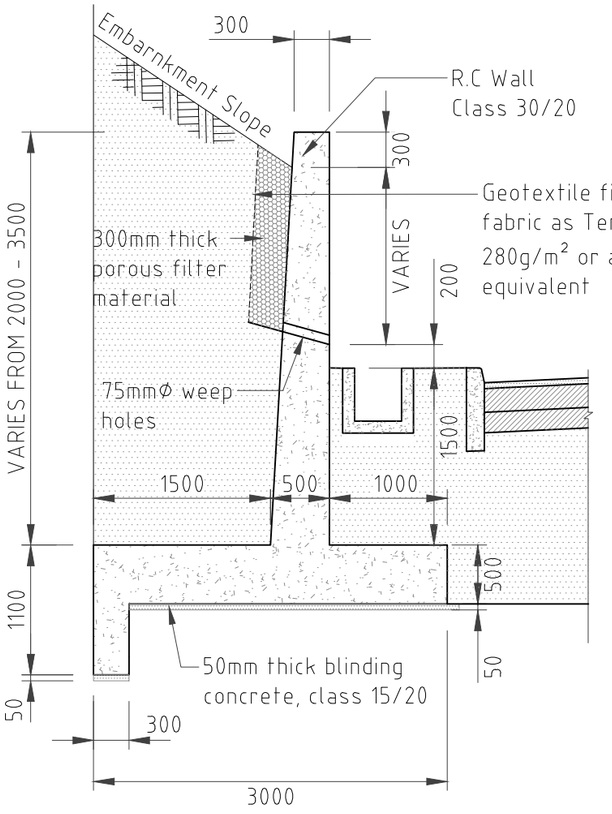

RETAINING WALL TYPE '7'

SCALE 1:50

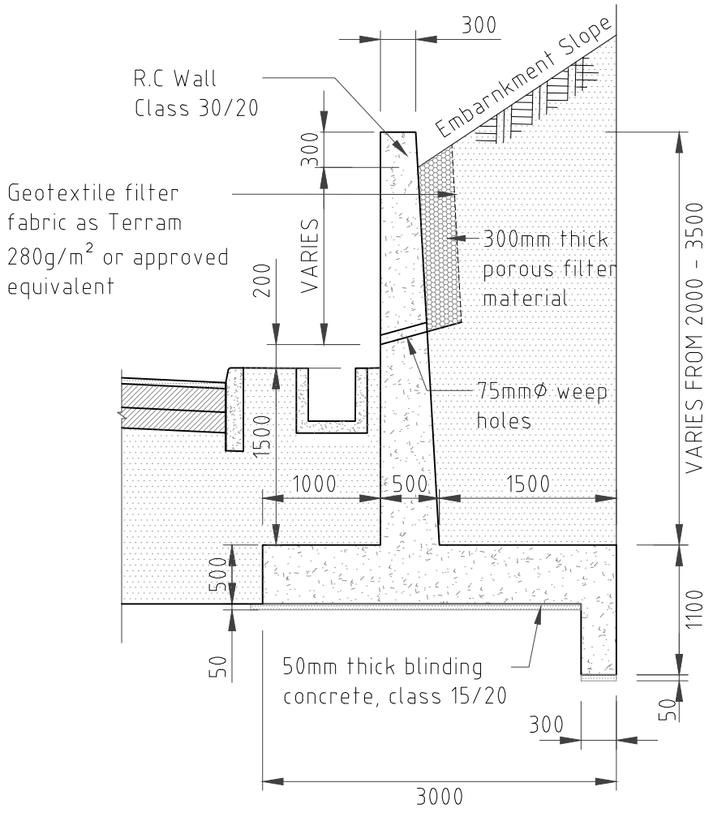

RETAINING WALL TYPE '7'

SCALE 1:50

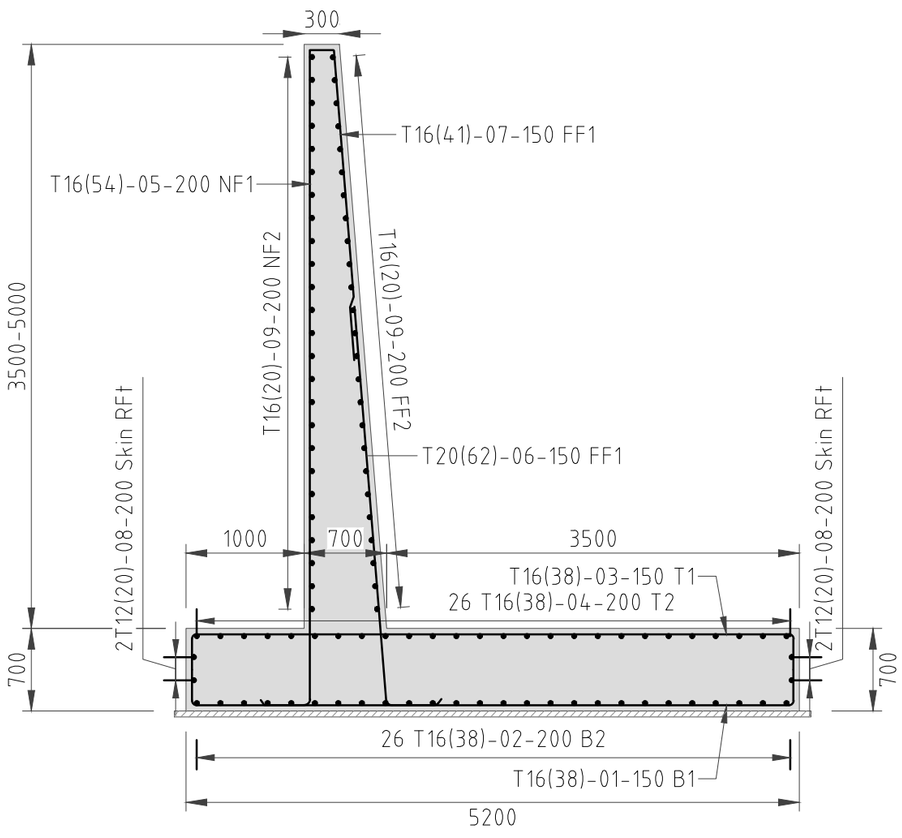

RETAINING WALL TYPE '6': REINFORCEMENT DETAILS

SCALE 1:50

CLIENT:

KENYA NATIONAL HIGHWAY AUTHORITY
Barabara Plaza,
Off Airport South Road,
P. O. Box, 49712 - 00100,
NAIROBI.

KENYA URBAN ROADS AUTHORITY
Barabara Plaza,
Off Airport South Road,
P. O. Box, 49712 - 00100,
NAIROBI.

FINANCIER:

THE WORLD BANK

PROJECT:

HORN OF AFRICA GATEWAY DEVELOPMENT PROJECT (HOAGDP): -

Consultancy Services for the Design and Works Supervision for the Proposed Extension of Meru Bypass.

CONTRACT NO:

KeNHA/RD/CS/D/4205/2024

CONSULTANT:

One Padmore Place 6th Floor,
George Padmore Road,
P. O. Box, 76672 - 00508,
NAIROBI.

DESIGN DETAILS

Action	Name	Date
Designed By:	C.J	AUG 2025
Drawn By:	C.J	AUG 2025
Checked By:	S.I	AUG 2025
Approved By:	L.R	AUG 2025

DRAWING REVISIONS

No.	Revision Details	Reviewed	Initials	Date	Approved
		By			
		Checked			
		By			
		Checked			
		By			
		Checked			
		By			
		Checked			
		By			
		Checked			

DRAWING TITLE:

REINFORCED CONCRETE RETAINING WALL

DRAWING SCALE:

AS SHOWN

DRAWING NO:

TYP-STC-002

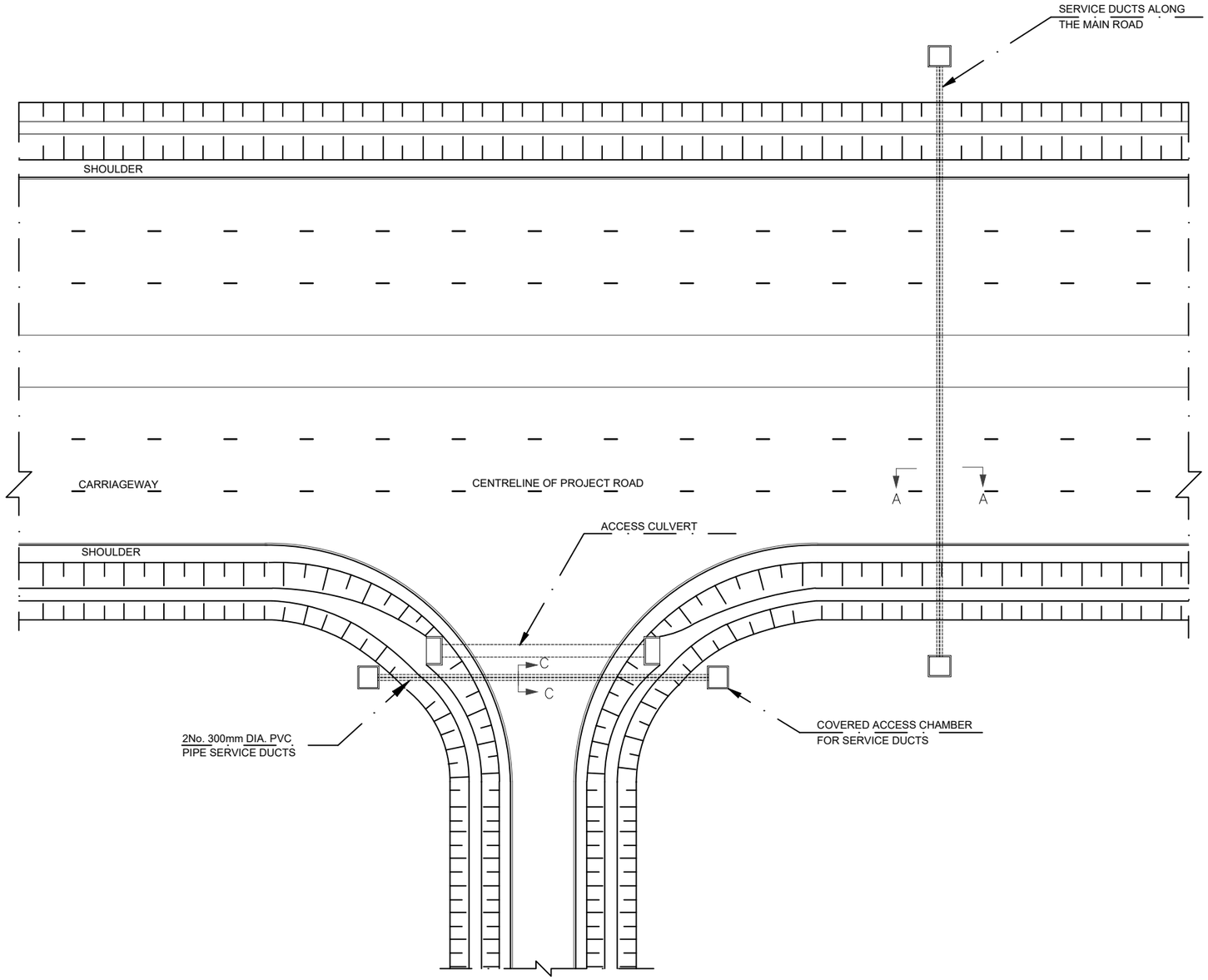

GENERAL LOCATION OF SERVICE DUCTS

SCALE 1:200

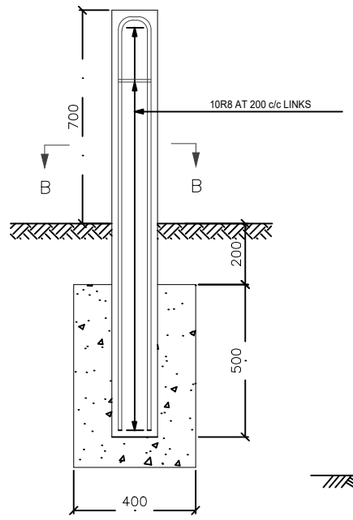

REINFORCEMENT DETAILS

SCALE 1:10

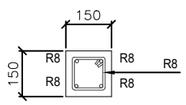

SECTION B-B

SCALE 1:10

DUCT MARKER POST

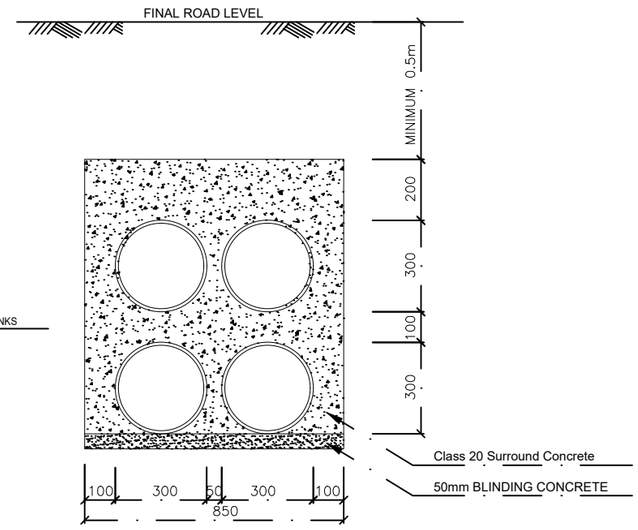

SECTION "A-A"

SCALE 1:5

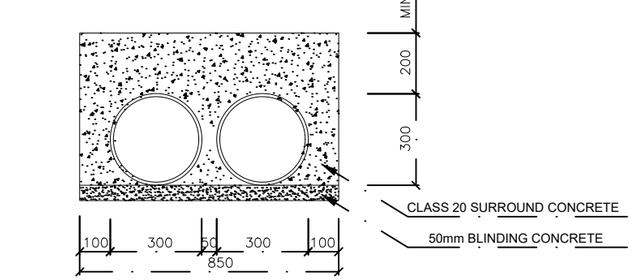

SECTION "C-C"

SCALE 1:5

NOTES:

1. ALL DIMENSIONS ARE IN METRES UNLESS OTHERWISE SHOWN.
2. THE SERVICE DUCTS TO BE INSTALLED AT 100m INTERVALS OR AS DIRECTED BY THE ENGINEER AT SELECTED TRADING CENTERS.

CLIENT:

Kenya National Highways Authority — Quality Highways, Better Connections

KENYA NATIONAL HIGHWAY AUTHORITY
Barabara Plaza,
Off Airport South Road,
P. O. Box, 49712 - 00100,
NAIROBI.

KENYA URBAN ROADS AUTHORITY
Barabara Plaza,
Off Airport South Road,
P. O. Box, 49712 - 00100,
NAIROBI.

FINANCIER:

THE WORLD BANK

PROJECT:

HORN OF AFRICA GATEWAY DEVELOPMENT PROJECT (HOAGDP): -

Consultancy Services for the Design and Works Supervision for the Proposed Extension of Meru Bypass.

CONTRACT NO:

KeNHA/RD/CS/D/4205/2024

CONSULTANT:

egis

One Padmore Place 6th Floor,
George Padmore Road,
P. O. Box, 76672 - 00508,
NAIROBI.

DESIGN DETAILS		
Action	Name	Date
Designed By:	C.J	AUG 2025
Drawn By:	C.J	AUG 2025
Checked By:	S.I	AUG 2025
Approved By:	L.R	AUG 2025

DRAWING REVISIONS						
No.	Revision Details	Reviewed	Initials	Date	Approved
		By			
		Checked			
		By			
		Checked			
		By			
		Checked			
		By			
		Checked			
		By			
		Checked			

DRAWING TITLE:

SERVICE DUCT

DRAWING SCALE:

AS SHOWN

DRAWING NO:

TYP - STD - 002
1 of 2

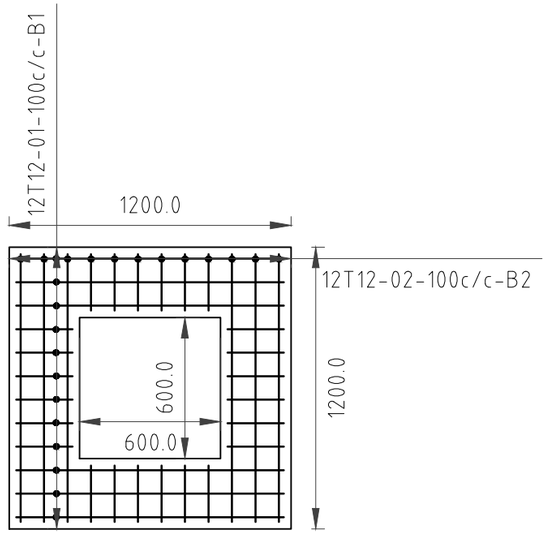

MANHOLE COVER SLAB REINFORCEMENT
SCALE 1:25

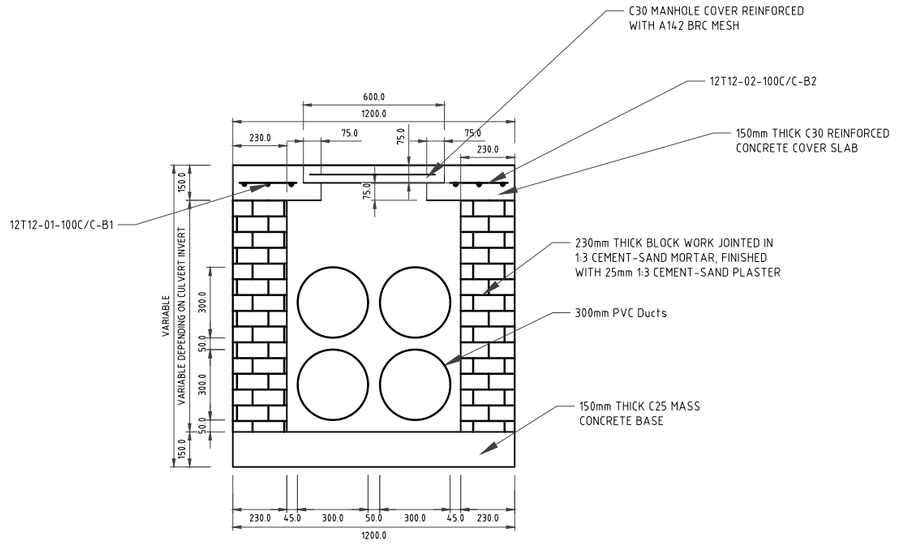

SECTION A-A THROUGH SERVICE DUCT MANHOLE
SCALE 1:25

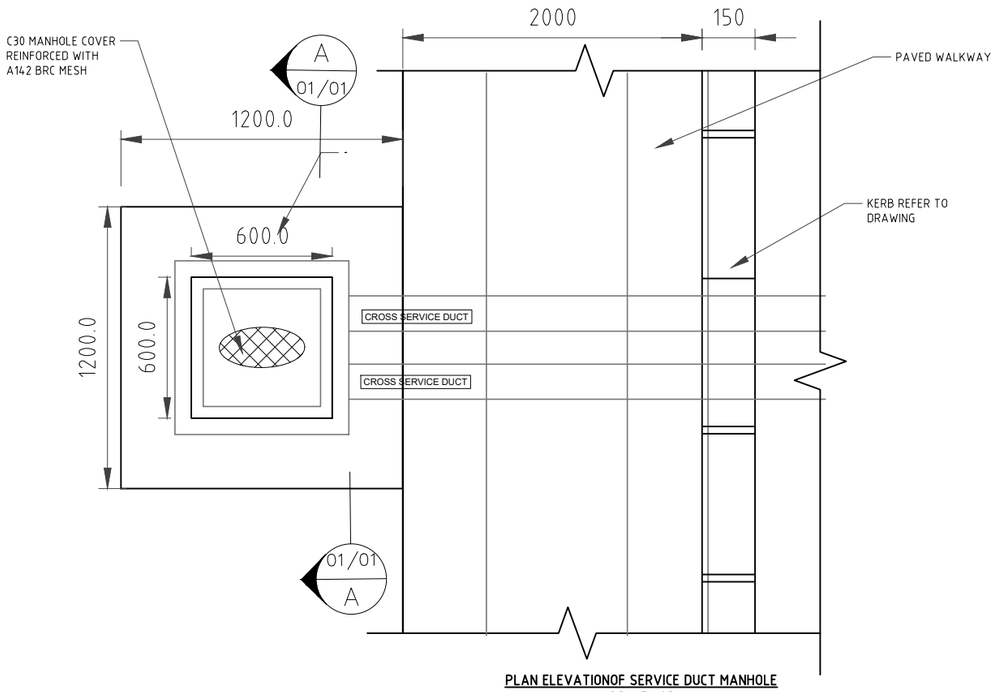

PLAN ELEVATIONOF SERVICE DUCT MANHOLE
SCALE 1:25

NOTES

1. Concrete
All concrete shall be class 30 with maximum aggregate size of 20mm. The cover to all reinforcement shall be 30mm in accordance with BS EN 206-1.

2. Reinforcement
All reinforcement shall have a yield strength of 500 Mpa and shall be verified using the testing procedures in accordance with EN 10080.

CLIENT:

KENYA NATIONAL HIGHWAY AUTHORITY
Barabara Plaza,
Off Airport South Road,
P. O. Box, 49712 - 00100,
NAIROBI.

KENYA URBAN ROADS AUTHORITY
Barabara Plaza,
Off Airport South Road,
P. O. Box, 49712 - 00100,
NAIROBI.

FINANCIER:

THE WORLD BANK

PROJECT:

HORN OF AFRICA GATEWAY DEVELOPMENT PROJECT (HOAGDP): -

Consultancy Services for the Design and Works Supervision for the Proposed Extension of Meru Bypass.

CONTRACT NO:

KeNHA/RD/CS/D/4205/2024

CONSULTANT:

One Padmore Place 6th Floor,
George Padmore Road,
P. O. Box, 76672 - 00508,
NAIROBI.

DESIGN DETAILS

Action	Name	Date
Designed By:	C.J	AUG 2025
Drawn By:	C.J	AUG 2025
Checked By:	S.I	AUG 2025
Approved By:	L.R	AUG 2025

DRAWING REVISIONS

No.	Revision Details	Reviewed	Initials	Date	Approved
		By			
		Checked			
		By			
		Checked			
		By			
		Checked			
		By			
		Checked			
		By			
		Checked			

DRAWING TITLE:

SERVICE DUCT

DRAWING SCALE:

AS SHOWN

DRAWING NO:

TYP - STD - 002
2 of 2

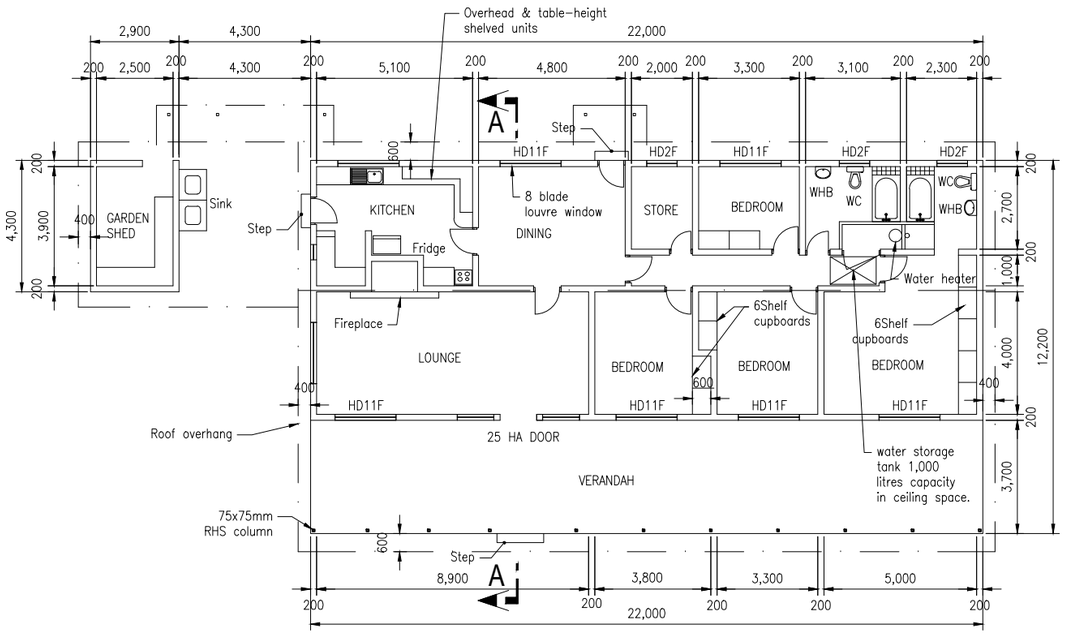

SENIOR STAFF HOUSE - TYPE I
PLAN - Scale 1:100

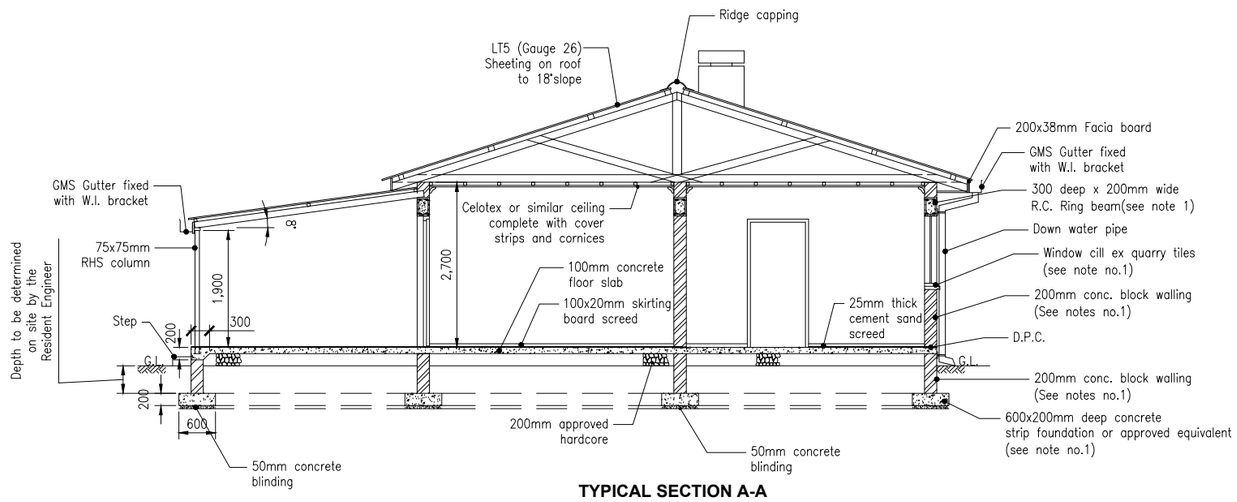

TYPICAL SECTION A-A
Scale 1:50

NOTES:

1). The Contractor may use prefabricated materials for all buildings, provided he gets prior approval of the same from the Resident Engineer.

2). All doors to be fitted with mortice locks.These are to be heavy duty on external doors. All windows to be as ideal casement or similar approved and burgler-proofed with 20mm x 3mm flat iron bars and mosquito proofed to the satisfaction of the Resident Engineer.

3). All buildings to be provided with fire extinguishers 3no. and a fire axe secured to the outside of the building.

4). Damp proof course to be provided under all walls to approval of Resident Engineer.

5). Drains passing under walls and drive ways to be surrounded with minimum 150mm lean concrete.

6). At least 3 substantial shelves to be fitted in all store rooms across full width of at least 2 walls.

7). Where gas cookers are provided, gas cylinders will be kept outside the building and an adequate provision should be made to prevent theft of the same.

8). Bat-proofing of eaves to be done to the satisfaction of the Resident Engineer.

9). If specific construction details are not shown on the drawings, the Contractor is free to propose details to the Resident Engineer for approval prior to commencement of construction.

10). 1,000 litres capacity roof tank to be provided in ceiling space of each house (type I & II) to Resident Engineer's approval.

11). The Contractor shall provide electricity and water to all buildings, as well as adequate refuse collection and septic tank(s) for all houses.

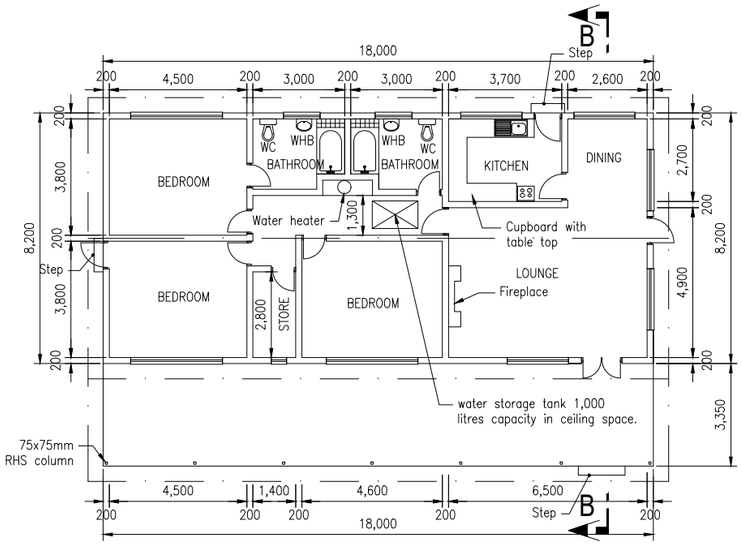

SENIOR STAFF HOUSE - TYPE II
PLAN - Scale 1:100

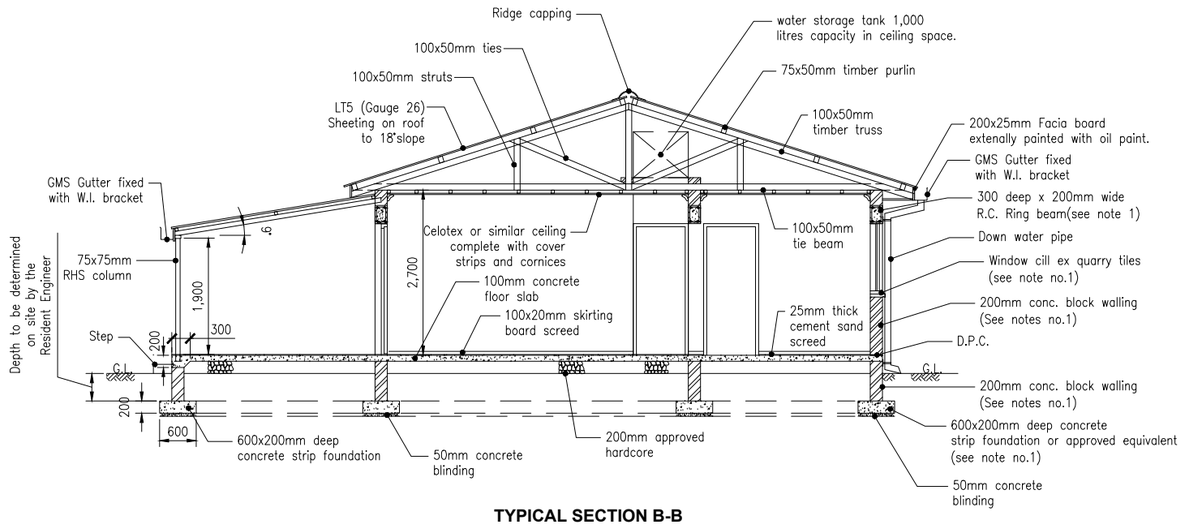

TYPICAL SECTION B-B
Scale 1:50

CLIENT:
KENYA NATIONAL HIGHWAY AUTHORITY
Barabara Plaza,
Off Airport South Road,
P. O. Box, 49712 - 00100,
NAIROBI.

KENYA URBAN ROADS AUTHORITY
Barabara Plaza,
Off Airport South Road,
P. O. Box, 49712 - 00100,
NAIROBI.

FINANCIER:
THE WORLD BANK

PROJECT:
HORN OF AFRICA GATEWAY DEVELOPMENT PROJECT (HOAGDP): -

Consultancy Services for the Design and Works Supervision for the Proposed Extension of Meru Bypass.

CONTRACT NO:
KeNHA/RD/CS/D/4205/2024

CONSULTANT:
egis
One Padmore Place 6th Floor,
George Padmore Road,
P. O. Box, 76672 - 00508,
NAIROBI.

DESIGN DETAILS

Action	Name	Date
Designed By:	C.J	AUG 2025
Drawn By:	C.J	AUG 2025
Checked By:	S.I	AUG 2025
Approved By:	L.R	AUG 2025

DRAWING REVISIONS

No.	Revision Details	Reviewed	Initials	Date	Approved
		By			
		Checked			
		By			
		Checked			
		By			
		Checked			
		By			
		Checked			
		By			
		Checked			

DRAWING TITLE:
RESIDENT ENGINEER'S HOUSING, SENIOR STAFF HOUSE TYPE I & II.

DRAWING SCALE:
AS SHOWN

DRAWING NO:
TYP-FAC-001

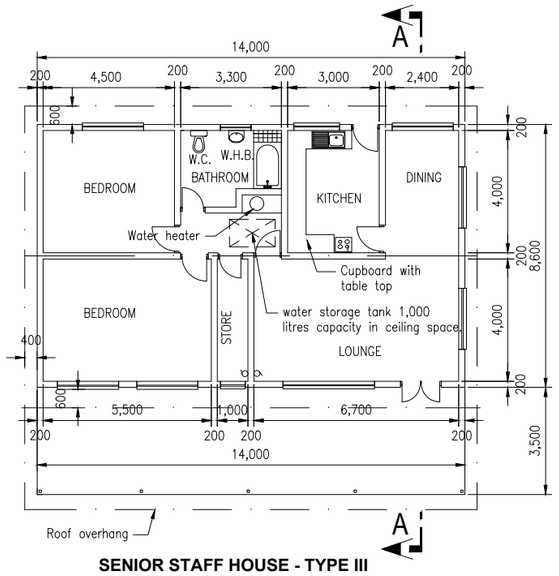

SENIOR STAFF HOUSE - TYPE III PLAN - Scale 1:100

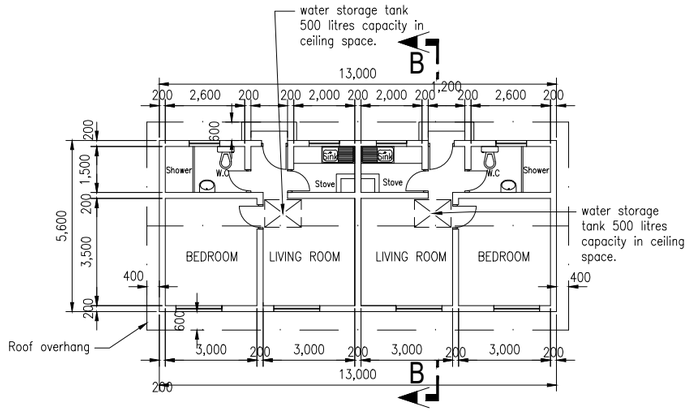

JUNIOR STAFF HOUSE TYPE IV - PLAN
Scale 1:100

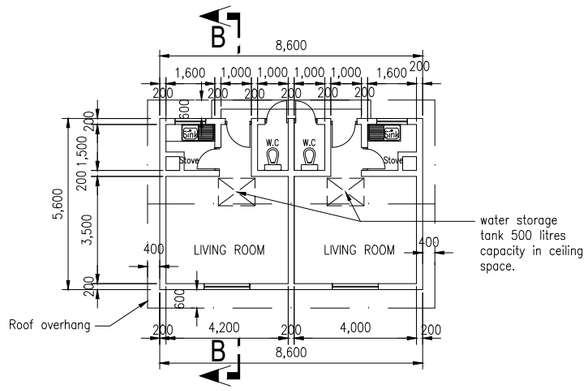

JUNIOR STAFF HOUSE TYPE V - PLAN
Scale 1:100

NOTES:

1). The Contractor may use prefabricated materials for all buildings, provided he gets prior approval of the same from the Resident Engineer.

2). All doors to be fitted with mortice locks.These are to be heavy duty on external doors. All windows to be as ideal casement or similar approved and burgler–proofed with 20mm x 3mm flat iron bars and mosquito proofed to the satisfaction of the Resident Engineer.

3). All buildings to be provided with fire extinguishers 3no. and a fire axe secured to the outside of the building.

4). Damp proof course to be provided under all walls to approval of Resident Engineer.

5). Drains passing under walls and drive ways to be surrounded with minimum 150mm lean concrete.

6). At least 3 substantial shelves to be fitted in all store rooms across full width of at least 2 walls.

7). Where gas cookers are provided, gas cylinders will be kept outside the building and an adequate provision should be made to prevent theft of the same.

8). Bat–proofing of eaves to be done to the satisfaction of the Resident Engineer.

9). If specific construction details are not shown on the drawings, the Contractor is free to propose details to the Resident Engineer for approval prior to commencement of construction.

10). 1,000 litres capacity roof tank to be provided in ceiling space of house III, while 2 no. 500 litres capacity shall be provided in ceiling space of each house types IV and V, to the approval of the Resident Engineer.

11). The Contractor shall provide electricity and water to all buildings, as well as adequate refuse collection and septic tank(s) for all houses.

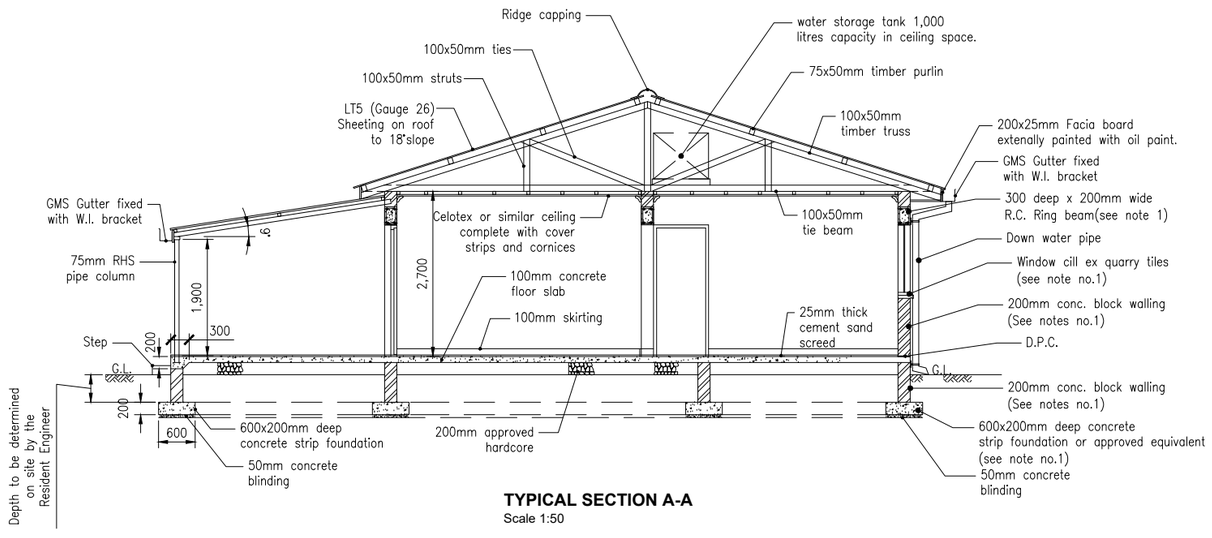

TYPICAL SECTION A-A
Scale 1:50

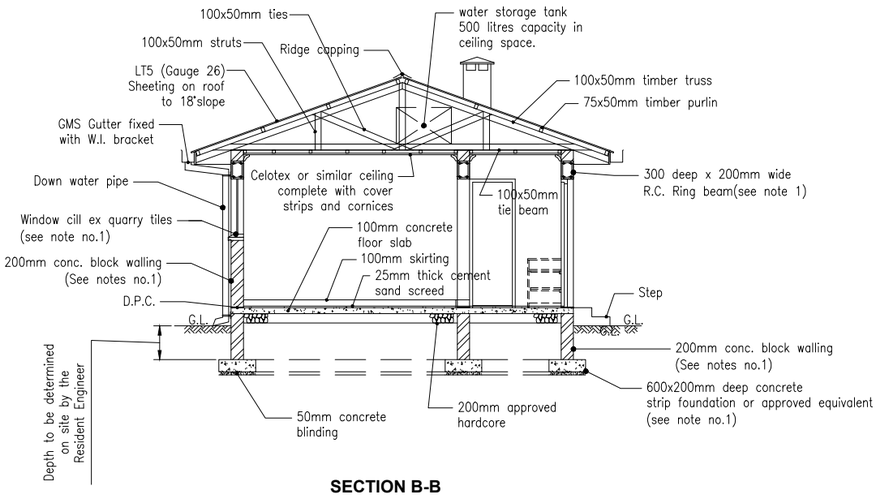

SECTION B-B
Scale 1:50

CLIENT:
KENYA NATIONAL HIGHWAY AUTHORITY
Barabara Plaza,
Off Airport South Road,
P. O. Box, 49712 - 00100,
NAIROBI.

KENYA URBAN ROADS AUTHORITY
Barabara Plaza,
Off Airport South Road,
P. O. Box, 49712 - 00100,
NAIROBI.

FINANCIER:
THE WORLD BANK

PROJECT:
HORN OF AFRICA GATEWAY DEVELOPMENT PROJECT (HOAGDP): -

Consultancy Services for the Design and Works Supervision for the Proposed Extension of Meru Bypass.

CONTRACT NO:
KeNHA/RD/CS/D/4205/2024

CONSULTANT:
egis
One Padmore Place 6th Floor,
George Padmore Road,
P. O. Box, 76672 - 00508,
NAIROBI.

DESIGN DETAILS

Action	Name	Date
Designed By:	C.J	AUG 2025
Drawn By:	C.J	AUG 2025
Checked By:	S.I	AUG 2025
Approved By:	L.R	AUG 2025

DRAWING REVISIONS

No.	Revision Details	Reviewed	Initials	Date	Approved
		By			
		Checked			
		By			
		Checked			
		By			
		Checked			
		By			
		Checked			
		By			
		Checked			

DRAWING TITLE:
RESIDENT ENGINEER'S HOUSING, SENIOR & JUNIOR STAFF HOUSE TYPE III, IV & V.

DRAWING SCALE:
AS SHOWN

DRAWING NO:
TYP-FAC-002

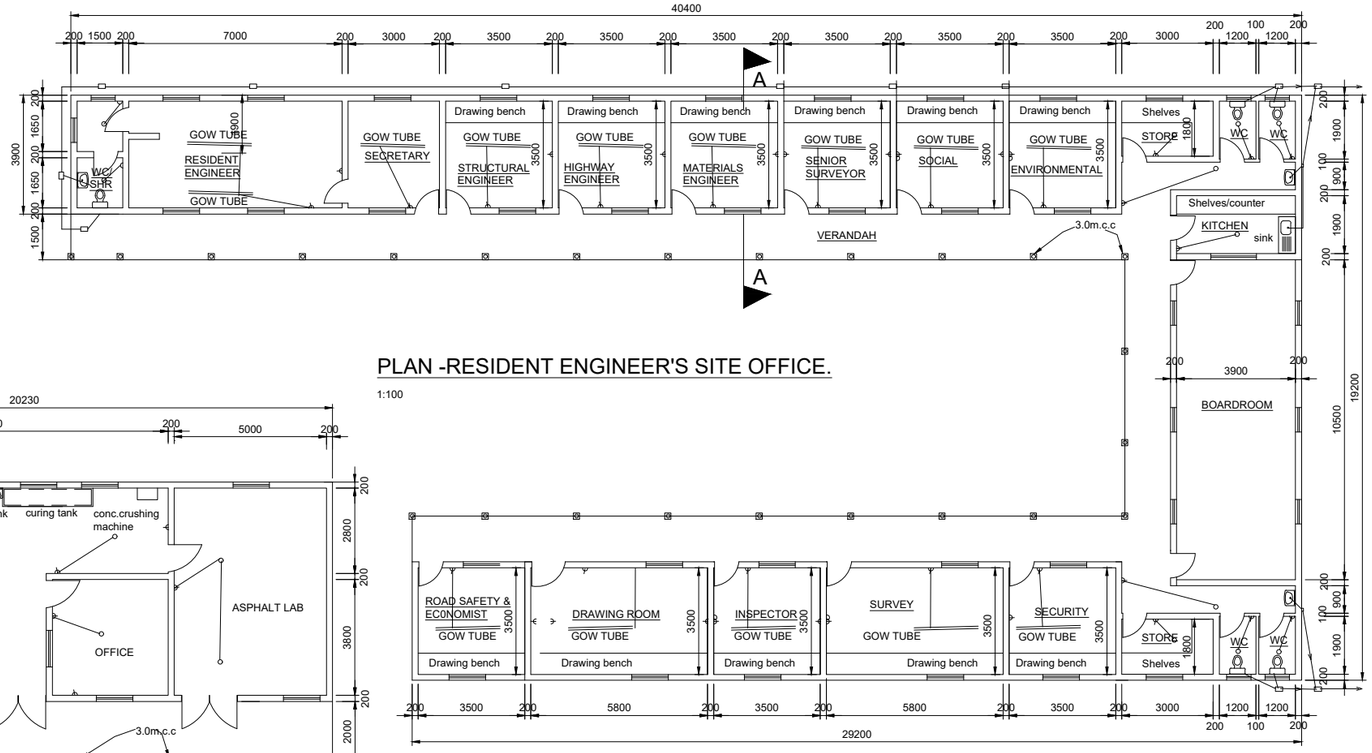

PLAN -RESIDENT ENGINEER'S SITE OFFICE.

1:100

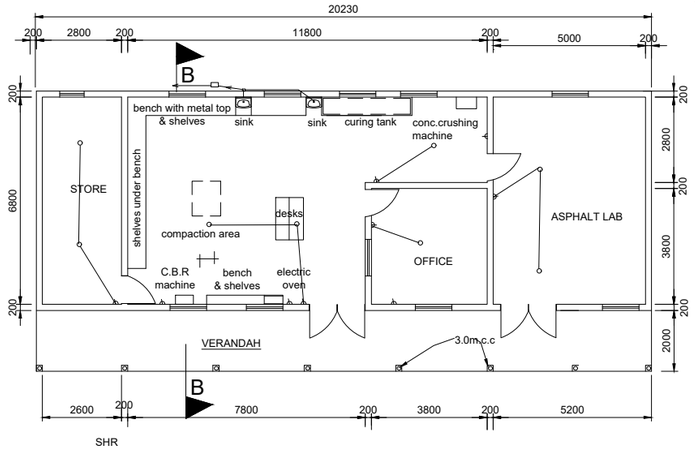

PLAN LABORATORY

1:100

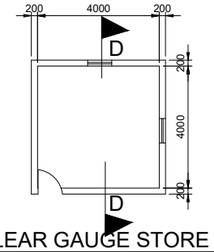

NUCLEAR GAUGE STORE HOUSE PLAN.

1:100

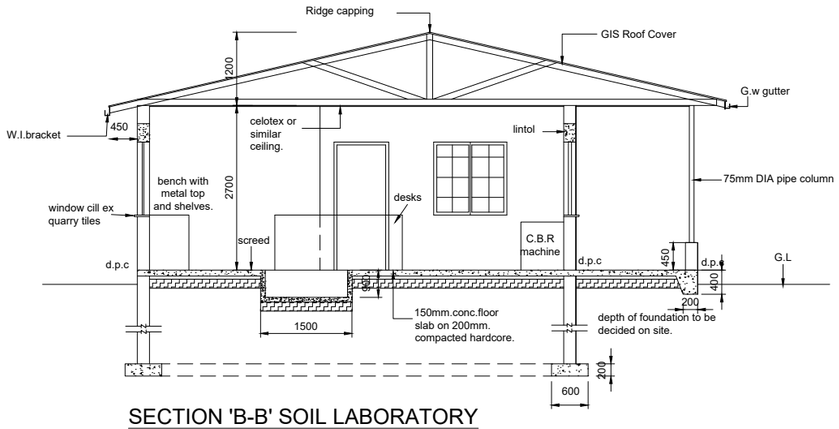

SECTION 'B-B' SOIL LABORATORY

1:50

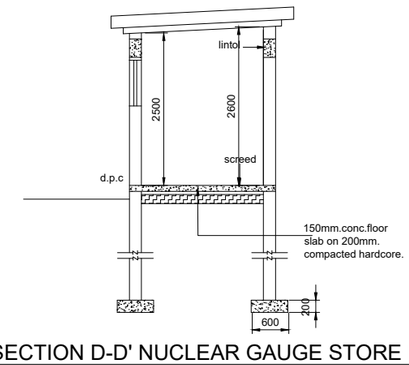

SECTION D-D' NUCLEAR GAUGE STORE HOUSE.

1:50

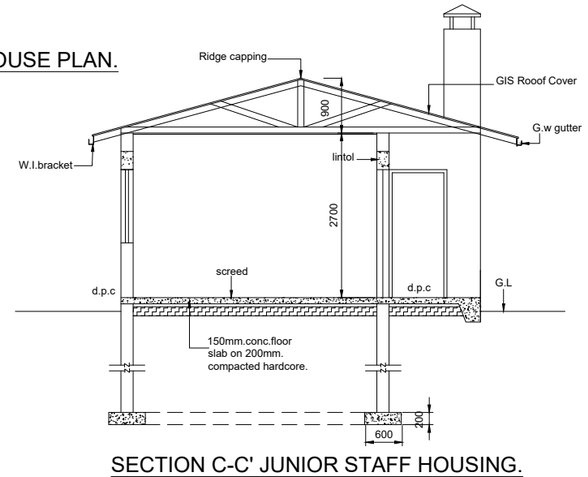

SECTION C-C' JUNIOR STAFF HOUSING.

1:50

CLIENT:

KENYA NATIONAL HIGHWAY AUTHORITY
Barabara Plaza,
Off Airport South Road,
P. O. Box, 49712 - 00100,
NAIROBI.

KENYA URBAN ROADS AUTHORITY
Barabara Plaza,
Off Airport South Road,
P. O. Box, 49712 - 00100,
NAIROBI.

FINANCIER:

THE WORLD BANK

PROJECT:

HORN OF AFRICA GATEWAY DEVELOPMENT PROJECT (HOAGDP): -

Consultancy Services for the Design and Works Supervision for the Proposed Extension of Meru Bypass.

CONTRACT NO:

KeNHA/RD/CS/D/4205/2024

CONSULTANT:

One Padmore Place 6th Floor,
George Padmore Road,
P. O. Box, 76672 - 00508,
NAIROBI.

DESIGN DETAILS

Action	Name	Date
Designed By:	C.J	AUG 2025
Drawn By:	C.J	AUG 2025
Checked By:	S.I	AUG 2025
Approved By:	L.R	AUG 2025

DRAWING REVISIONS

No.	Revision Details	Reviewed	Initials	Date	Approved
		By			
		Checked			
		By			
		Checked			
		By			
		Checked			
		By			
		Checked			
		By			
		Checked			

DRAWING TITLE:

RESIDENT ENGINEER'S SITE OFFICE AND LABORATORY

DRAWING SCALE:

AS SHOWN

DRAWING NO:

TYP-FAC-003

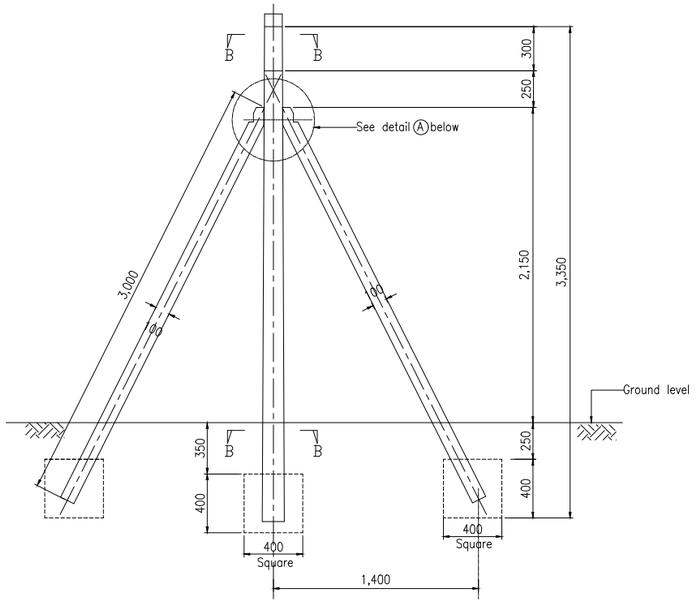

DETAILS OF P.C.C STRAINING POST FOR CHAIN LINK FENCE (AT 33.3m. C/C)

SCALE A1. 1:20
A3. 1:40

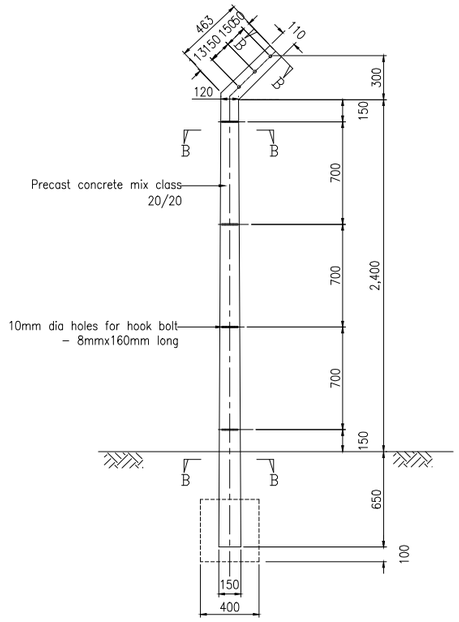

DETAILS OF SINGLE P.C.C. POST (AT 3.30m C/C)

SCALE A1. 1:20
A3. 1:40

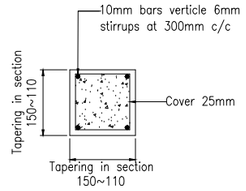

SECTION B-B
DETAIL OF POST

SCALE A1. 1:5

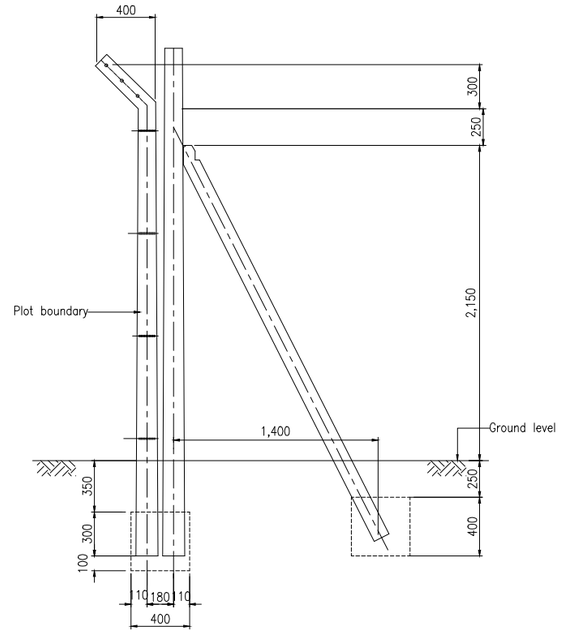

DETAILS OF CORNER POSTS

SCALE A1. 1:20
A3. 1:40

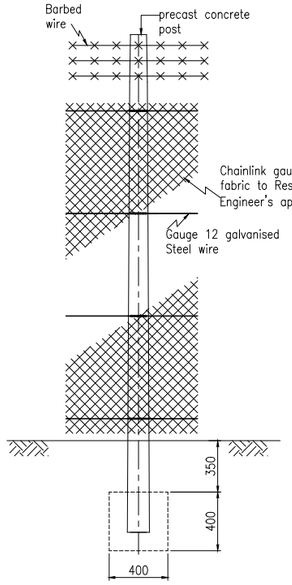

ELEVATION

SCALE A1. 1:20
A3. 1:40

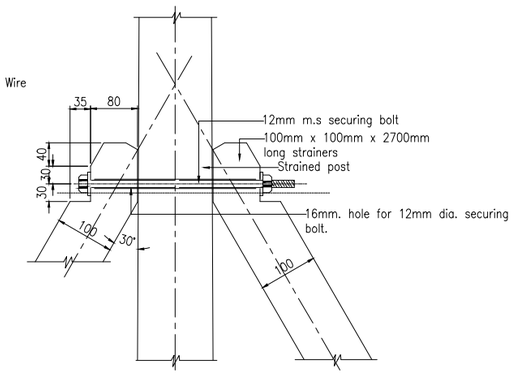

DETAIL 'A'

SCALE A1. 1:5
A3. 1:10

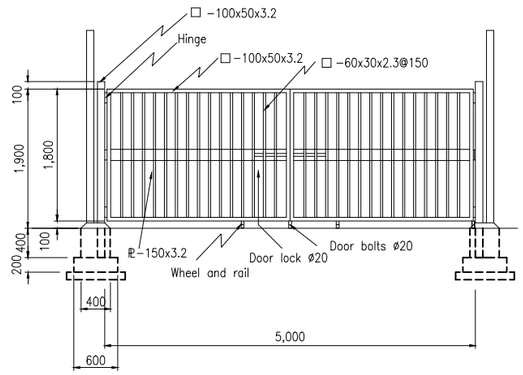

FRONT ELEVATION

SCALE A1. 1:40
A3. 1:80

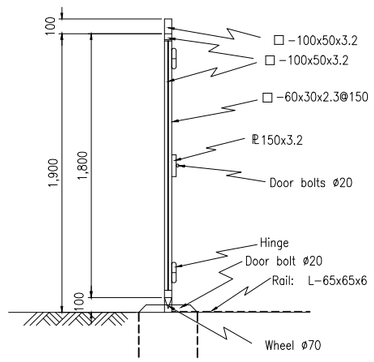

SECTIONAL DETAIL

SCALE A1. 1:20
A3. 1:40

NOTES:

a. Every 10th post to strained.
b. Post to be at 3300mm centers.
c. Top of all posts to be kept in uniform line.
d. Concrete mixes for
   1. Posts class 20/20
   2. Strainer posts class 20/20
   3. Foundation concrete class 15/20
e. Chain link to be gauge 12 galvanised steel wire.
f. Straining wires to be 12 gauge galvanised steel plain wires.
g. Wires on crank to be 12 gauge galvanised steel barbed wire.
h. All structural opening dimensions to be confirmed by the Engineer on site before commencing any fabrication.
i. Strainng wires to be fixed to post with galvanised hook bolts 8mm dia x 60mm long.
j. Where the posts encroache on private land the fence should be erected with crank pointing towards the site.
k. All dimensions are in mm unless otherwise stated.
l. C/C = Center to center.
m. CTS = Centers
n. M.S = Mild steel.
o. P.C.C = Precast Concrete.

GATE DETAILS

CLIENT:

KENYA NATIONAL HIGHWAY AUTHORITY
Barabara Plaza,
Off Airport South Road,
P. O. Box, 49712 - 00100,
NAIROBI.

KENYA URBAN ROADS AUTHORITY
Barabara Plaza,
Off Airport South Road,
P. O. Box, 49712 - 00100,
NAIROBI.

FINANCIER:

THE WORLD BANK

PROJECT:

HORN OF AFRICA GATEWAY DEVELOPMENT PROJECT (HOAGDP): -

Consultancy Services for the Design and Works Supervision for the Proposed Extension of Meru Bypass.

CONTRACT NO:

KeNHA/RD/CS/D/4205/2024

CONSULTANT:

egis
One Padmore Place 6th Floor,
George Padmore Road,
P. O. Box, 76672 - 00508,
NAIROBI.

DESIGN DETAILS

Action	Name	Date
Designed By:	C.J	AUG 2025
Drawn By:	C.J	AUG 2025
Checked By:	S.I	AUG 2025
Approved By:	L.R	AUG 2025

DRAWING REVISIONS

No.	Revision Details	Reviewed	Initials	Date	Approved
		By			
		Checked			
		By			
		Checked			
		By			
		Checked			
		By			
		Checked			
		By			
		Checked			

DRAWING TITLE:

FENCES

DRAWING SCALE:

AS SHOWN

DRAWING NO:

TYP-FAC-004

MERU BY-PASS ROADS

CULVERTS

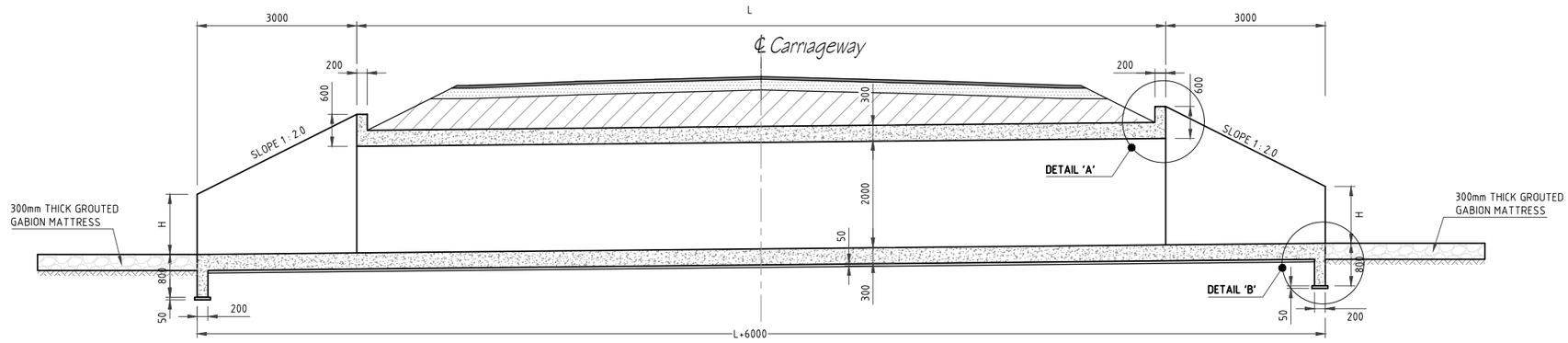

SECTION A-A
SCALE 1:50

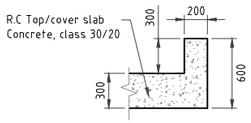

HEAD WALL DETAIL 'A'
SCALE 1:25

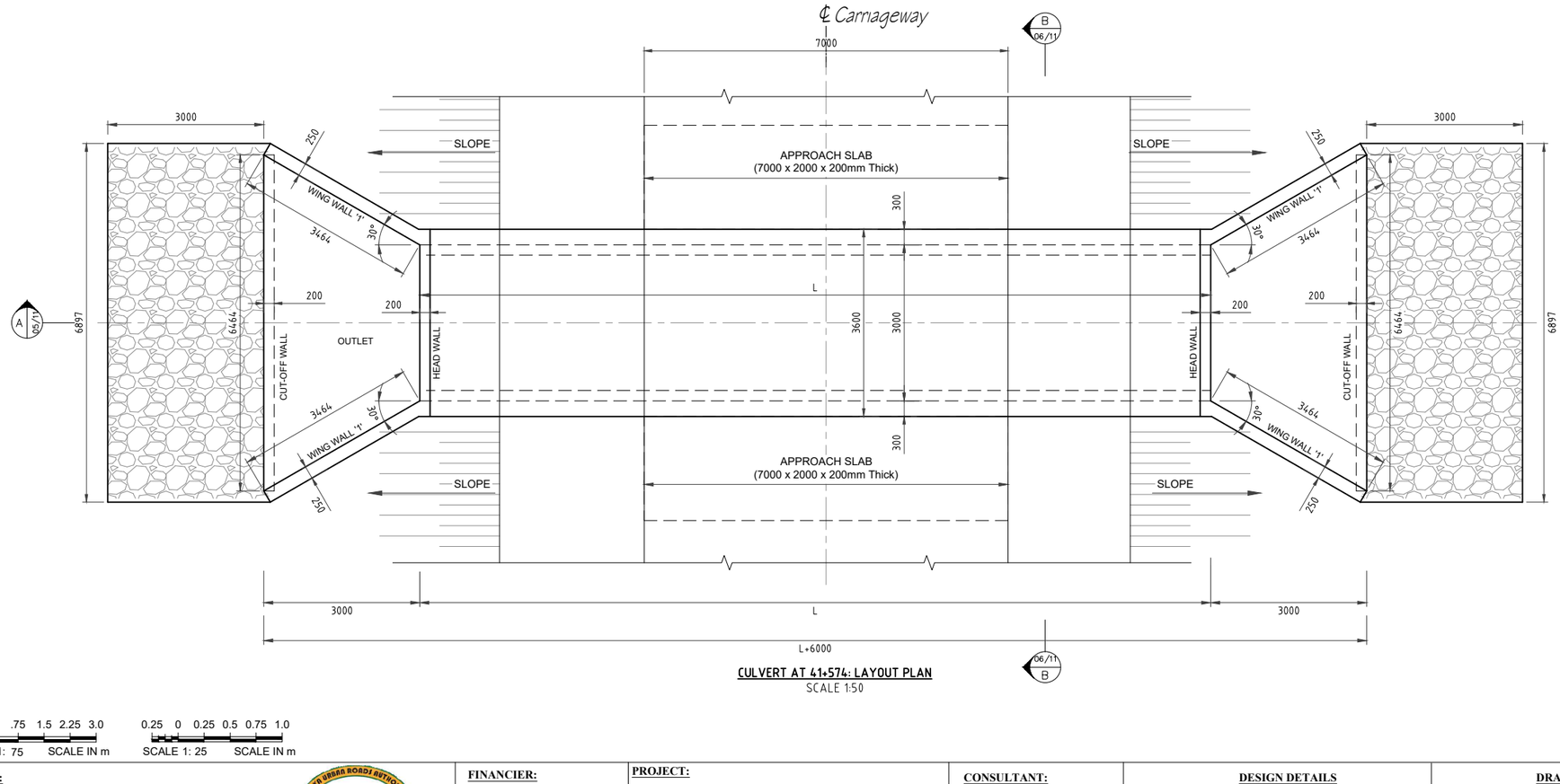

CULVERT AT 41+574: LAYOUT PLAN
SCALE 1:50

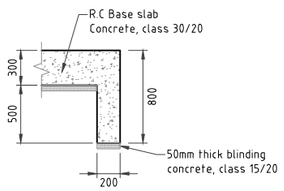

CUT-OFF WALL DETAIL 'B'
SCALE 1:25

0.75 0 .75 1.5 2.25 3.0
SCALE 1: 75 SCALE IN m

0.25 0 0.25 0.5 0.75 1.0
SCALE 1: 25 SCALE IN m

NOTES

1. For general Notes See TYP-DRA-001

CLIENT:
KENYA NATIONAL HIGHWAY AUTHORITY
Barabara Plaza,
Off Airport South Road,
P. O. Box, 49712 - 00100,
NAIROBI.

KENYA URBAN ROADS AUTHORITY
Barabara Plaza,
Off Airport South Road,
P. O. Box, 49712 - 00100,
NAIROBI.

FINANCIER:
THE WORLD BANK

PROJECT:
HORN OF AFRICA GATEWAY DEVELOPMENT PROJECT (HOAGDP): -

Consultancy Services for the Design and Works Supervision for the Proposed Extension of Meru Bypass.

CONTRACT NO:
KeNHA/RD/CS/D/4205/2024

CONSULTANT:
egis
One Padmore Place 6th Floor,
George Padmore Road,
P. O. Box, 76672 - 00508,
NAIROBI.

DESIGN DETAILS

Action	Name	Date
Designed By:	C.J	APRIL.2025
Drawn By:	C.J	APRIL.2025
Checked By:	S.I	APRIL.2025
Approved By:	L.R	APRIL.2025

DRAWING REVISIONS

No.	Revision Details	Reviewed	Initials	Date	Approved
		By			
		Checked			
		By			
		Checked			
		By			
		Checked			
		By			
		Checked			
		By			
		Checked			

DRAWING TITLE:
1 CELL 3.0x2.0m BOX CULVERT

LAYOUT PLAN AND SECTION

DRAWING SCALE:
AS SHOWN

DRAWING NO:
TYP-BC-001
01/03

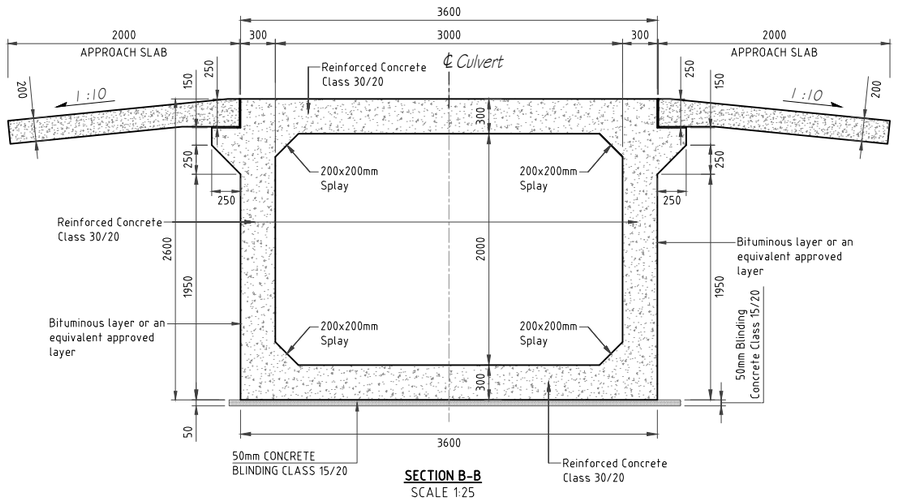

SECTION B-B
SCALE 1:25

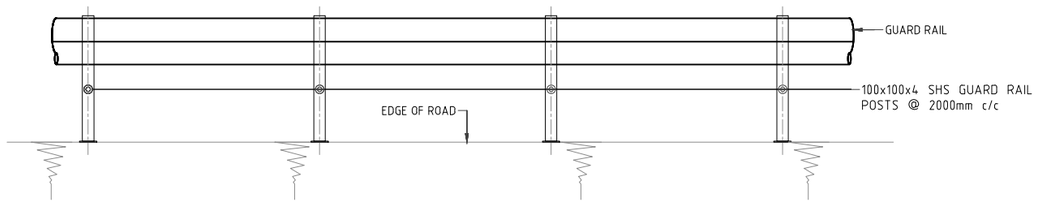

CULVERT END ELEVATION
SCALE 1:25

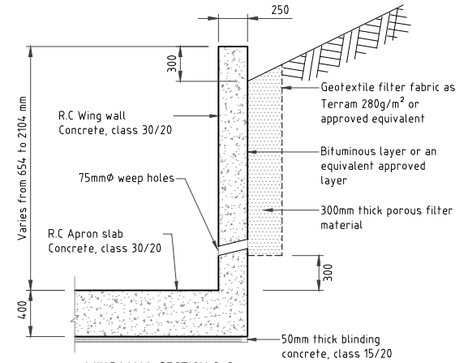

WING WALL SECTION C-C
SCALE 1:25

0.25 0 0.25 0.5 0.75 1.0
SCALE 1: 25 SCALE IN m

NOTES

1. For general Notes See TYP-DRA-001

CLIENT:
KENYA NATIONAL HIGHWAY AUTHORITY
Barabara Plaza,
Off Airport South Road,
P. O. Box, 49712 - 00100,
NAIROBI.

KENYA URBAN ROADS AUTHORITY
Barabara Plaza,
Off Airport South Road,
P. O. Box, 49712 - 00100,
NAIROBI.

FINANCIER:
THE WORLD BANK

PROJECT:
HORN OF AFRICA GATEWAY DEVELOPMENT PROJECT (HOAGDP): -

Consultancy Services for the Design and Works Supervision for the Proposed Extension of Meru Bypass.

CONTRACT NO:
KeNHA/RD/CS/D/4205/2024

CONSULTANT:
egis
One Padmore Place 6th Floor,
George Padmore Road,
P. O. Box, 76672 - 00508,
NAIROBI.

DESIGN DETAILS

Action	Name	Date
Designed By:	C.J	APRIL.2025
Drawn By:	C.J	APRIL.2025
Checked By:	S.I	APRIL.2025
Approved By:	L.R	APRIL.2025

DRAWING REVISIONS

No.	Revision Details	Reviewed	Initials	Date	Approved
		By			
		Checked			
		By			
		Checked			
		By			
		Checked			
		By			
		Checked			
		By			
		Checked			

DRAWING TITLE:
1 CELL 3.0x2.0m BOX CULVERT

SECTIONS AND ELEVATIONS

DRAWING SCALE:
AS SHOWN

DRAWING NO:
TYP-BC-001
02/03

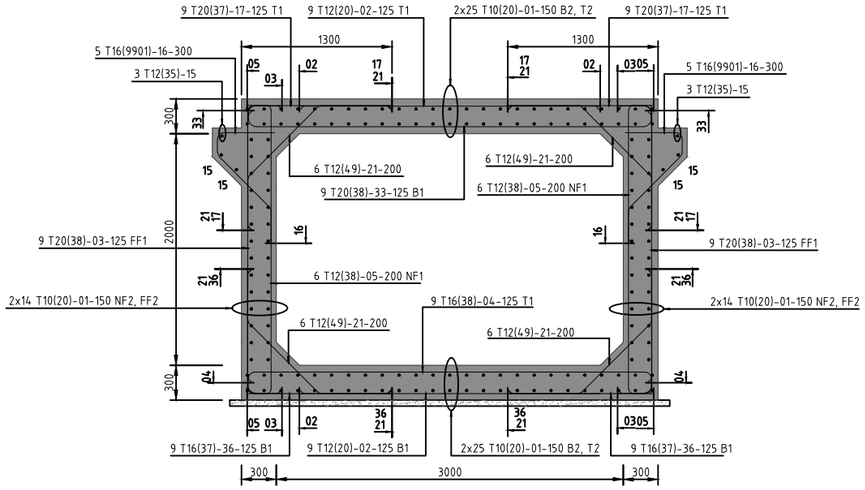

CULVERT RC DETAILS, 1 Nos
SCALE 1:25

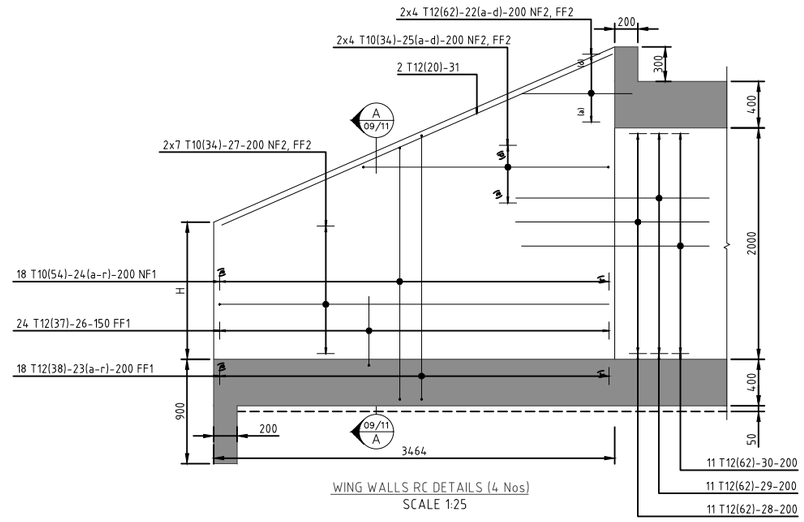

WING WALLS RC DETAILS (4 Nos)
SCALE 1:25

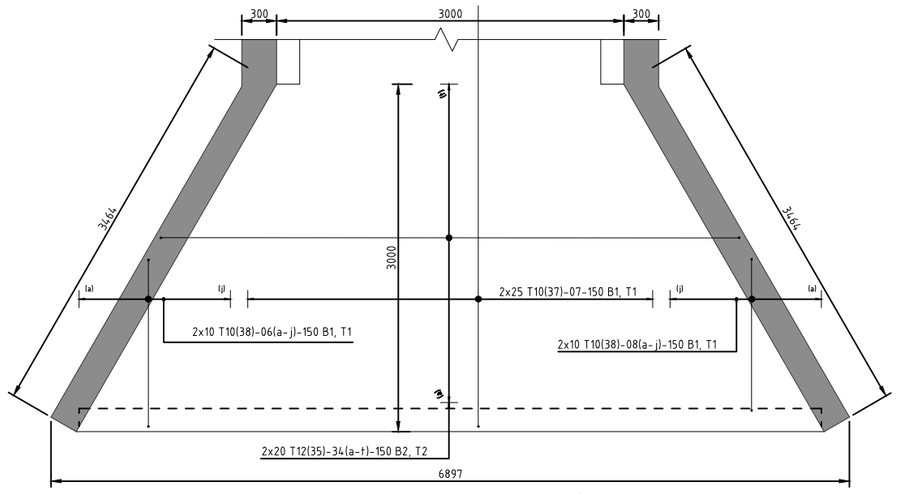

APRON SLAB RC DETAILS (2Nos)
SCALE 1:25

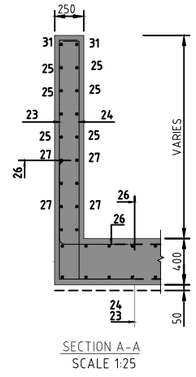

SECTION A-A
SCALE 1:25

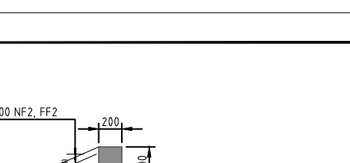

WING WALL CORNER DETAIL
SCALE 1:25

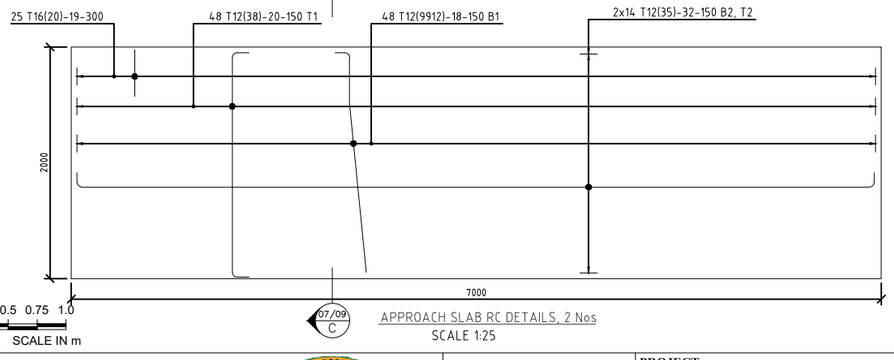

APPROACH SLAB RC DETAILS, 2 Nos
SCALE 1:25

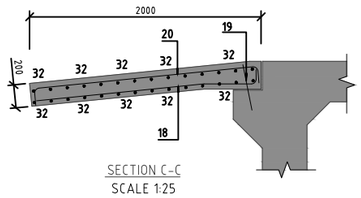

SECTION C-C
SCALE 1:25

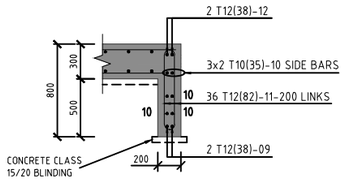

CUT OFF WALL RC DETAILS, LENGTH=10.72m (2Nos)
SCALE 1:25

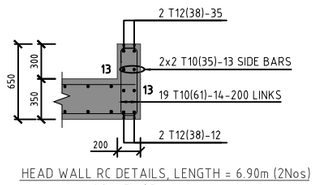

HEAD WALL RC DETAILS, LENGTH = 6.90m (2Nos)
SCALE 1:25

NOTES

1. For general Notes See TYP-DRA-001

CLIENT:

KENYA NATIONAL HIGHWAY AUTHORITY
Barabara Plaza,
Off Airport South Road,
P. O. Box, 49712 - 00100,
NAIROBI.

KENYA URBAN ROADS AUTHORITY
Barabara Plaza,
Off Airport South Road,
P. O. Box, 49712 - 00100,
NAIROBI.

FINANCIER:

THE WORLD BANK

PROJECT:

HORN OF AFRICA GATEWAY DEVELOPMENT PROJECT (HOAGDP): -

Consultancy Services for the Design and Works Supervision for the Proposed Extension of Meru Bypass.

CONTRACT NO:

KeNHA/RD/CS/D/4205/2024

CONSULTANT:

One Padmore Place 6th Floor,
George Padmore Road,
P. O. Box, 76672 - 00508,
NAIROBI.

DESIGN DETAILS

Action	Name	Date
Designed By:	C.J	APRIL.2025
Drawn By:	C.J	APRIL.2025
Checked By:	S.I	APRIL.2025
Approved By:	L.R	APRIL.2025

DRAWING REVISIONS

No.	Revision Details	Reviewed	Initials	Date	Approved
		By			
		Checked			
		By			
		Checked			
		By			
		Checked			
		By			
		Checked			
		By			
		Checked			

DRAWING TITLE:

1 CELL 3.0x2.0m BOX CULVERT

REINFORCEMENT DETAILS

DRAWING SCALE:

AS SHOWN

DRAWING NO:

TYP-BC-001
03/03

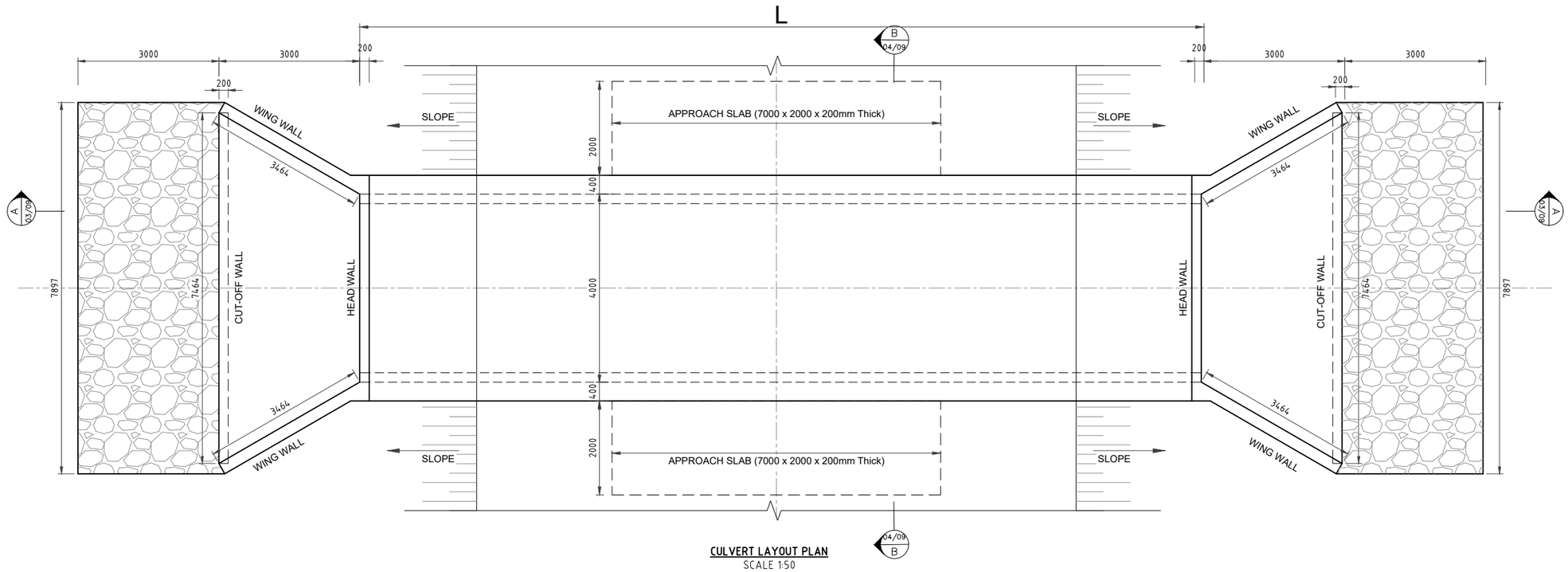

CULVERT LAYOUT PLAN
SCALE 1:50

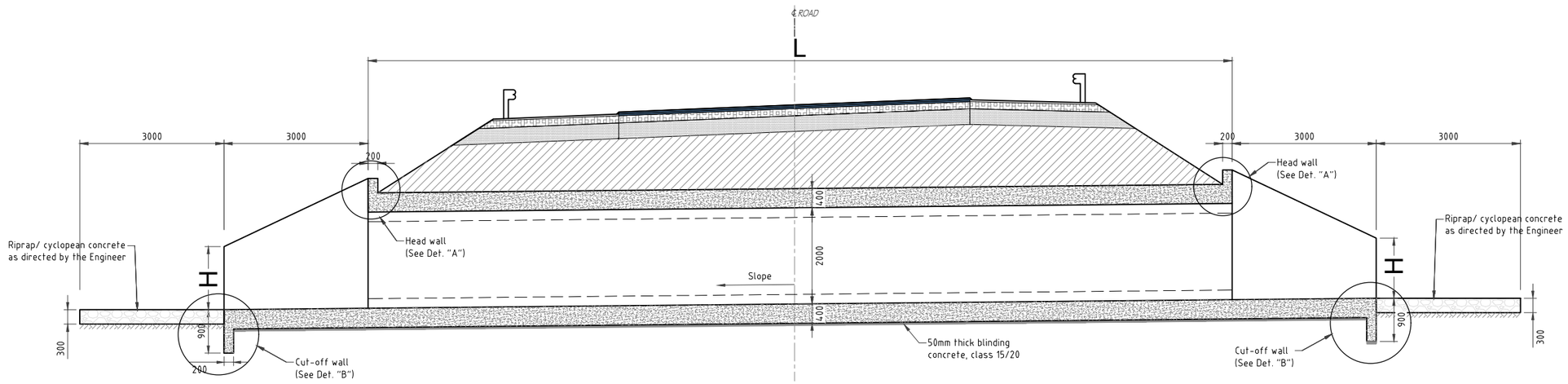

LONGITUDINAL SECTION A-A
SCALE 1:50

0.5 0 0.5 1 1.5 2
SCALE 1: 50 SCALE IN m

NOTES

1. For general Notes See TYP-DRA-001

CLIENT:

Kenya National Highways Authority
Quality Highways, Better Connections

KENYA NATIONAL HIGHWAY AUTHORITY
Barabara Plaza,
Off Airport South Road,
P. O. Box, 49712 - 00100,
NAIROBI.

KENYA URBAN ROADS AUTHORITY
Barabara Plaza,
Off Airport South Road,
P. O. Box, 49712 - 00100,
NAIROBI.

FINANCIER:

THE WORLD BANK

PROJECT:

HORN OF AFRICA GATEWAY DEVELOPMENT PROJECT (HOAGDP): -

Consultancy Services for the Design and Works Supervision for the Proposed Extension of Meru Bypass.

CONTRACT NO:

KeNHA/RD/CS/D/4205/2024

CONSULTANT:

egis

One Padmore Place 6th Floor,
George Padmore Road,
P. O. Box, 76672 - 00508,
NAIROBI.

DESIGN DETAILS

Action	Name	Date
Designed By:	C.J	APRIL.2025
Drawn By:	C.J	APRIL.2025
Checked By:	S.I	APRIL.2025
Approved By:	L.R	APRIL.2025

DRAWING REVISIONS

No.	Revision Details	Reviewed	Initials	Date	Approved
		By			
		Checked			
		By			
		Checked			
		By			
		Checked			
		By			
		Checked			
		By			
		Checked			

DRAWING TITLE:

SINGLE CELL 4.0 x 2.0 BOX CULVERT

LAYOUT PLAN AND LONGITUDINAL SECTION

DRAWING SCALE:

AS SHOWN

DRAWING NO:

TYP-BC-002
01/03

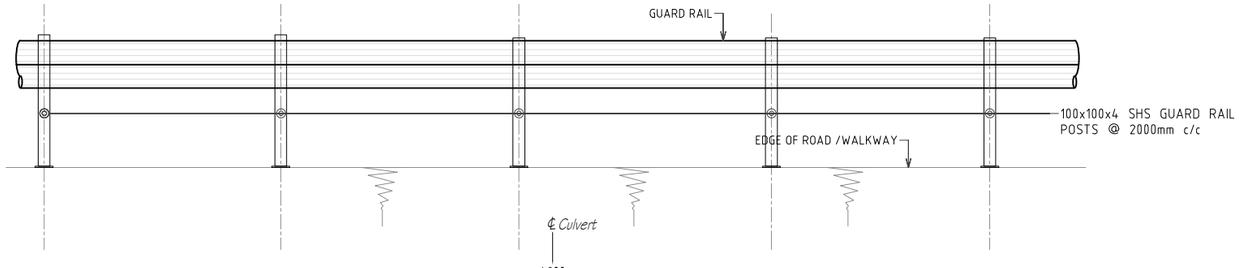

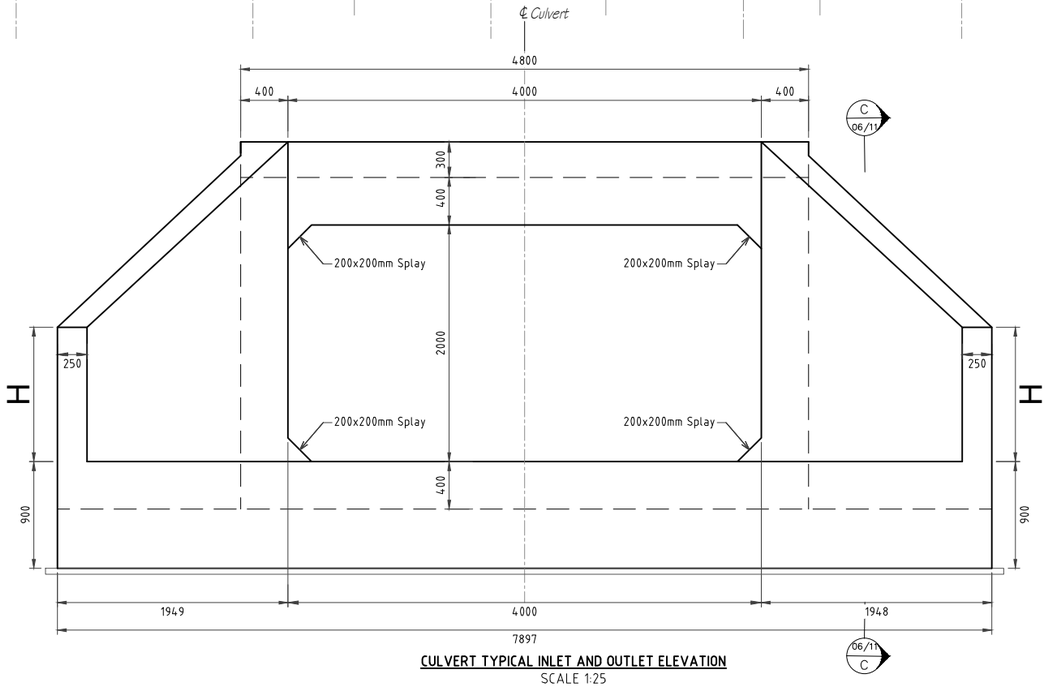

CULVERT TYPICAL INLET AND OUTLET ELEVATION
SCALE 1:25

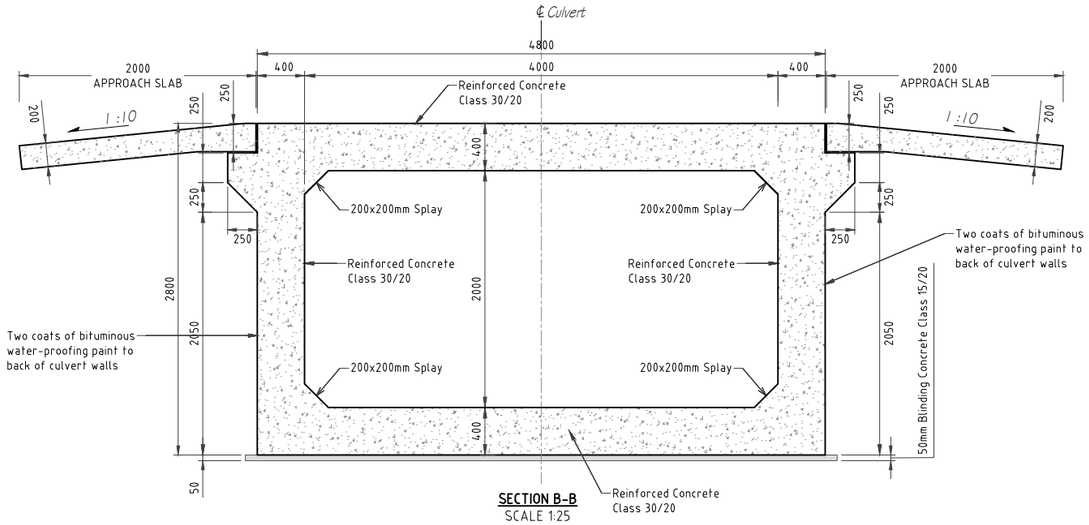

SECTION B-B
SCALE 1:25

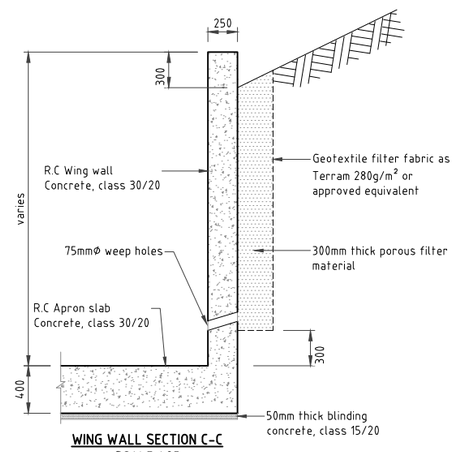

WING WALL SECTION C-C
SCALE 1:25

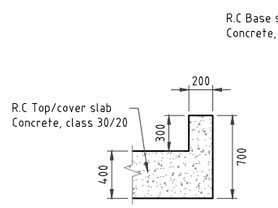

HEAD WALL DETAIL 'A'
SCALE 1:25

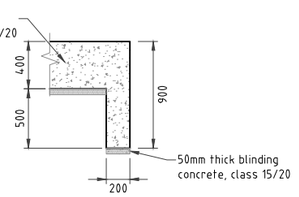

CUT-OFF WALL DETAIL 'B'
SCALE 1:25

0.25 0 0.25 0.5 0.75 1.0
SCALE 1: 25 SCALE IN m

NOTES

1. For general Notes See TYP-DRA-001

CLIENT:
Kenya National Highways Authority
Quality Highways, Better Connections
KENYA NATIONAL HIGHWAY AUTHORITY
Barabara Plaza,
Off Airport South Road,
P. O. Box, 49712 - 00100,
NAIROBI.

KENYA URBAN ROADS AUTHORITY
KENYA URBAN ROADS AUTHORITY
Barabara Plaza,
Off Airport South Road,
P. O. Box, 49712 - 00100,
NAIROBI.

FINANCIER:
THE WORLD BANK

PROJECT:
HORN OF AFRICA GATEWAY DEVELOPMENT PROJECT (HOAGDP): -
Consultancy Services for the Design and Works Supervision for the Proposed Extension of Meru Bypass.

CONTRACT NO:
KeNHA/RD/CS/D/4205/2024

CONSULTANT:
egis
One Padmore Place 6th Floor,
George Padmore Road,
P. O. Box, 76672 - 00508,
NAIROBI.

DESIGN DETAILS

Action	Name	Date
Designed By:	C.J	APRIL.2025
Drawn By:	C.J	APRIL.2025
Checked By:	S.I	APRIL.2025
Approved By:	L.R	APRIL.2025

DRAWING REVISIONS

No.	Revision Details	Reviewed	Initials	Date	Approved
		By			
		Checked			
		By			
		Checked			
		By			
		Checked			
		By			
		Checked			
		By			
		Checked			

DRAWING TITLE:
SINGLE CELL 4.0 x 2.0 BOX CULVERT
CROSS SECTION AND TYPICAL INLET & OUTLET ELEVATION

DRAWING SCALE:
AS SHOWN

DRAWING NO:
TYP-BC-002
02/03

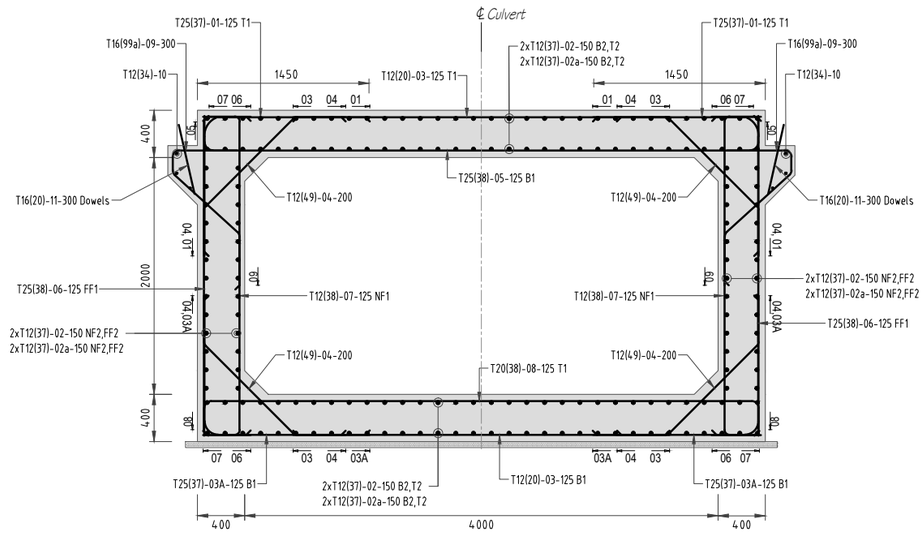

SINGLE-CELL 4.0x2.0 BOX CULVERT REINFORCEMENT DETAILS
SCALE 1:25

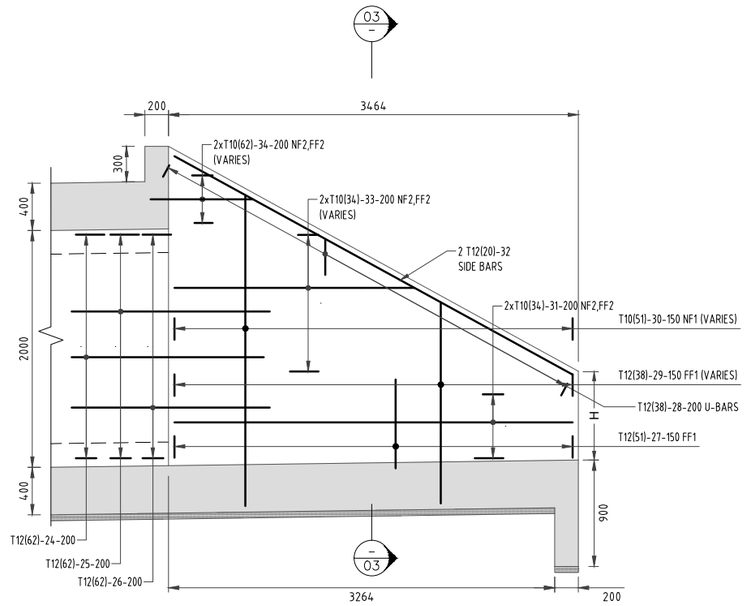

TYPICAL WING WALL REINFORCEMENT DETAILS
SCALE 1:25

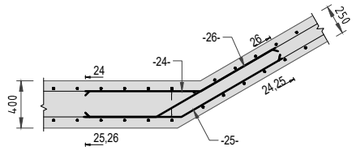

WING WALL: CORNER DETAIL
SCALE 1:25

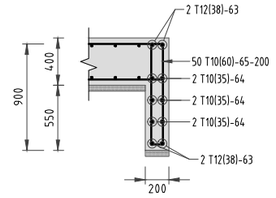

SECTION 01-01: CUT-OFF WALL REINFORCEMENT DETAILS
SCALE 1:25

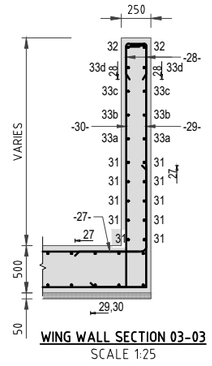

WING WALL SECTION 03-03
SCALE 1:25

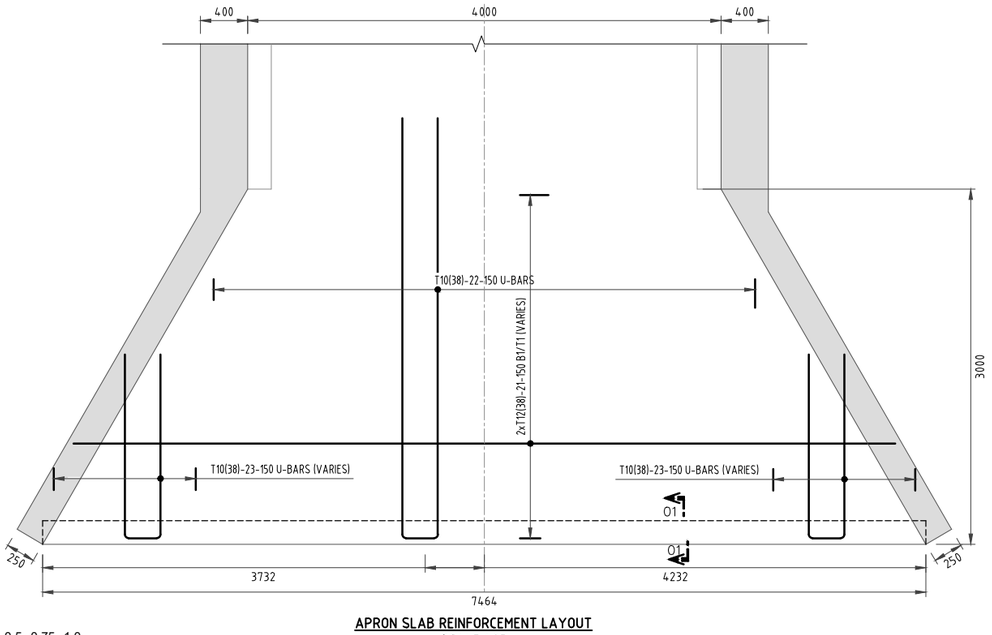

APRON SLAB REINFORCEMENT LAYOUT
SCALE 1:25

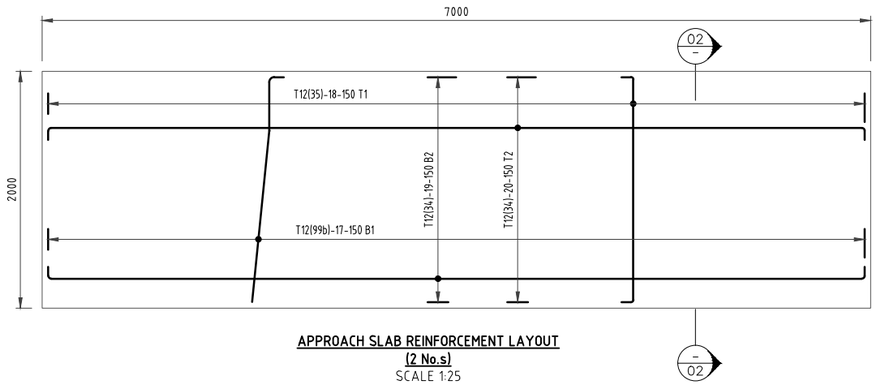

APPROACH SLAB REINFORCEMENT LAYOUT
(2 No.s)
SCALE 1:25

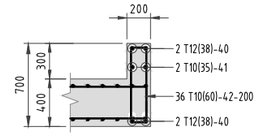

HEAD WALL DETAIL 'A': REINFORCEMENT
SCALE 1:25

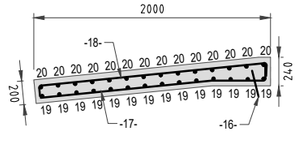

APPROACH SLAB SECTION 02-02
SCALE 1:25

0.25 0 0.25 0.5 0.75 1.0
SCALE 1: 25 SCALE IN m

NOTES
1. For general Notes See TYP-DRA-001

CLIENT:
KENYA NATIONAL HIGHWAY AUTHORITY
Barabara Plaza,
Off Airport South Road,
P. O. Box, 49712 - 00100,
NAIROBI.

KENYA URBAN ROADS AUTHORITY
Barabara Plaza,
Off Airport South Road,
P. O. Box, 49712 - 00100,
NAIROBI.

FINANCIER:
THE WORLD BANK

PROJECT:
HORN OF AFRICA GATEWAY DEVELOPMENT PROJECT (HOAGDP): -

Consultancy Services for the Design and Works Supervision for the Proposed Extension of Meru Bypass.

CONTRACT NO:
KeNHA/RD/CS/D/4205/2024

CONSULTANT:
egis
One Padmore Place 6th Floor,
George Padmore Road,
P. O. Box, 76672 - 00508,
NAIROBI.

DESIGN DETAILS

Action	Name	Date
Designed By:	C.J	APRIL.2025
Drawn By:	C.J	APRIL.2025
Checked By:	S.I	APRIL.2025
Approved By:	L.R	APRIL.2025

DRAWING REVISIONS

No.	Revision Details	Reviewed	Initials	Date	Approved
		By			
		Checked			
		By			
		Checked			
		By			
		Checked			
		By			
		Checked			
		By			
		Checked			

DRAWING TITLE:
SINGLE CELL 4.0 x 2.0 BOX CULVERT
REINFORCEMENT DETAILS

DRAWING SCALE:
AS SHOWN

DRAWING NO:
TYP-BC-002
03/03

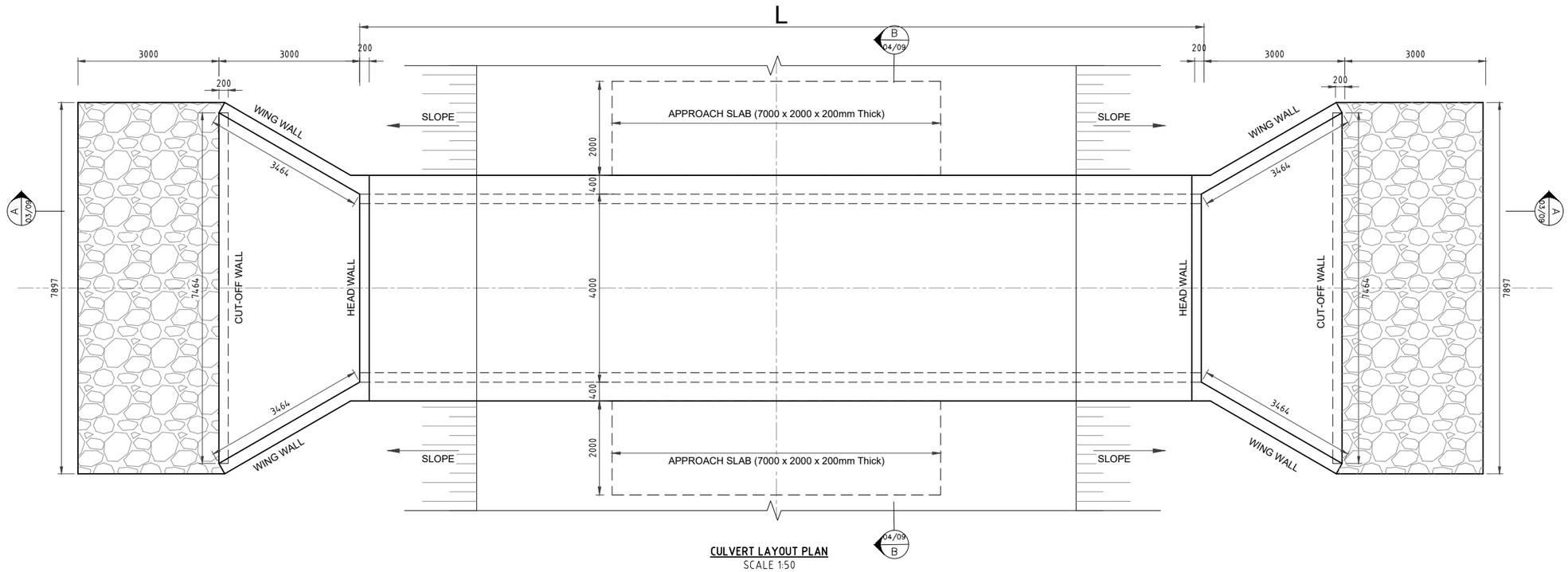

CULVERT LAYOUT PLAN
SCALE 1:50

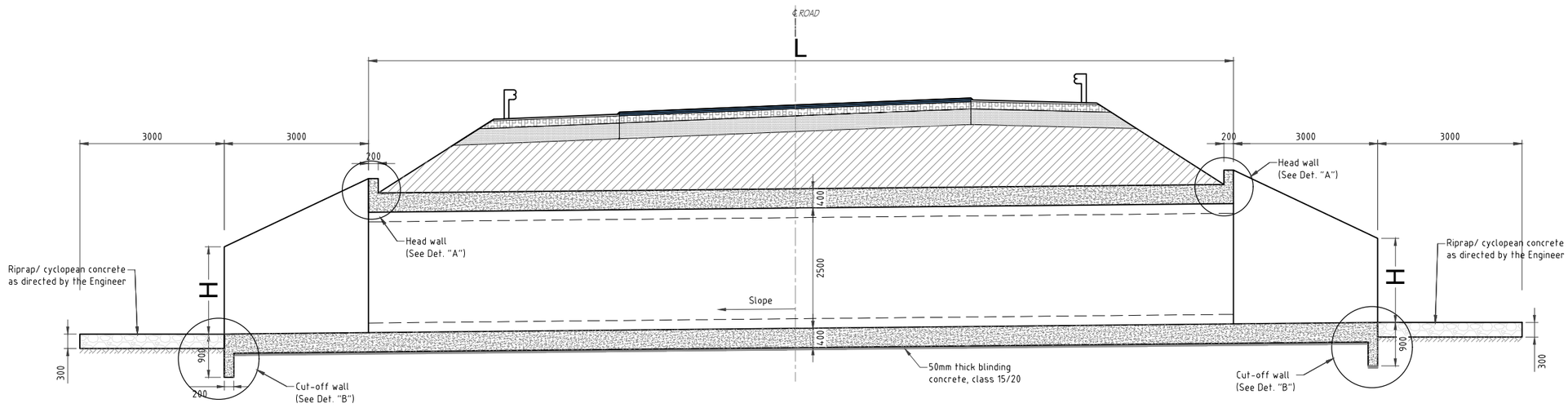

LONGITUDINAL SECTION A-A
SCALE 1:50

0.5 0 0.5 1 1.5 2
SCALE 1: 50 SCALE IN m

NOTES

1. For general Notes See TYP-DRA-001

CLIENT:
KENYA NATIONAL HIGHWAY AUTHORITY
Barabara Plaza,
Off Airport South Road,
P. O. Box, 49712 - 00100,
NAIROBI.

KENYA URBAN ROADS AUTHORITY
Barabara Plaza,
Off Airport South Road,
P. O. Box, 49712 - 00100,
NAIROBI.

FINANCIER:
THE WORLD BANK

PROJECT:
HORN OF AFRICA GATEWAY DEVELOPMENT PROJECT (HOAGDP): -

Consultancy Services for the Design and Works Supervision for the Proposed Extension of Meru Bypass.

CONTRACT NO:
KeNHA/RD/CS/D/4205/2024

CONSULTANT:
egis
One Padmore Place 6th Floor,
George Padmore Road,
P. O. Box, 76672 - 00508,
NAIROBI.

DESIGN DETAILS

Action	Name	Date
Designed By:	C.J	APRIL.2025
Drawn By:	C.J	APRIL.2025
Checked By:	S.I	APRIL.2025
Approved By:	L.R	APRIL.2025

DRAWING REVISIONS

No.	Revision Details	Reviewed	Initials	Date	Approved
		By			
		Checked			
		By			
		Checked			
		By			
		Checked			
		By			
		Checked			
		By			
		Checked			

DRAWING TITLE:
SINGLE CELL 4.0 x 2.5 BOX CULVERT

LAYOUT PLAN AND LONGITUDINAL SECTION

DRAWING SCALE:
AS SHOWN

DRAWING NO:
TYP-BC-003
01/03

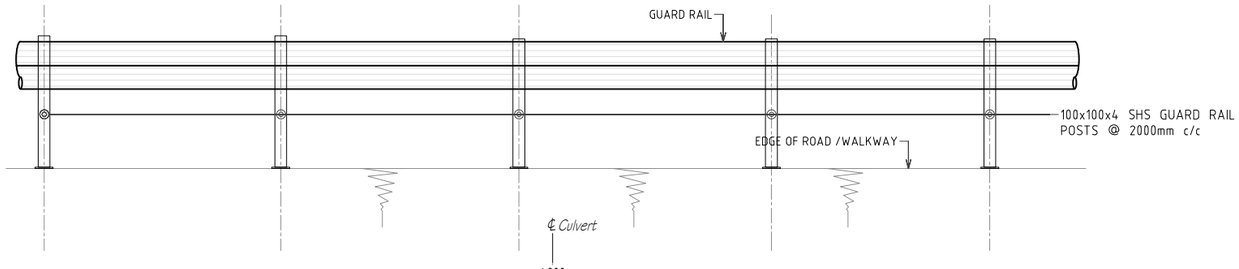

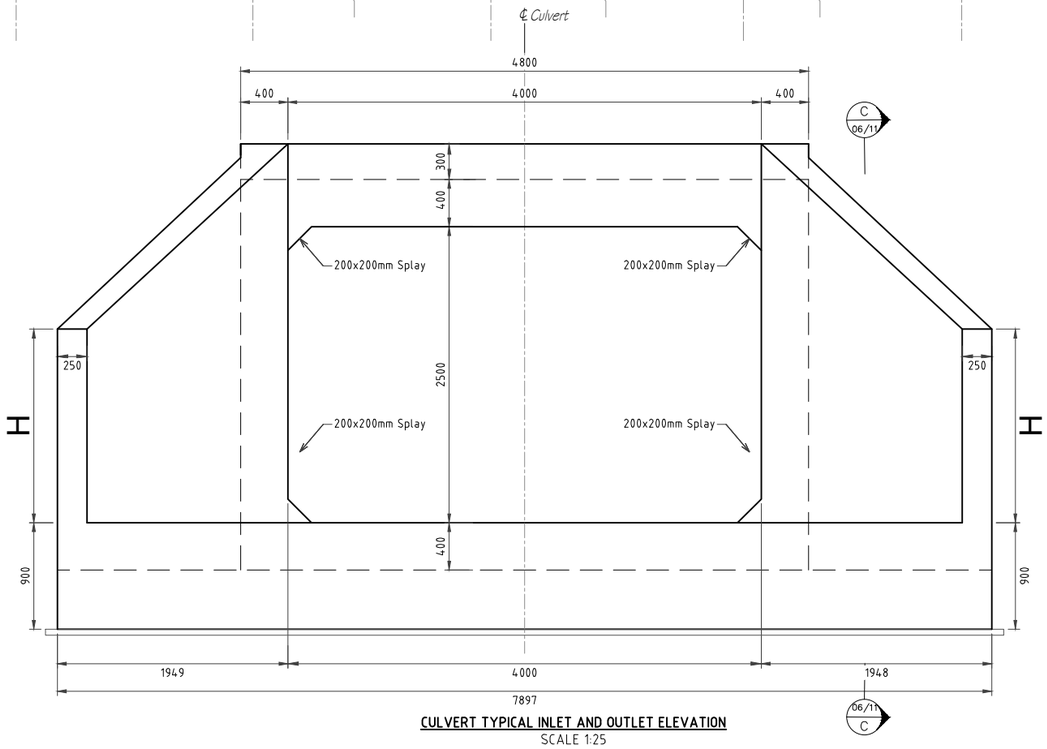

CULVERT TYPICAL INLET AND OUTLET ELEVATION
SCALE 1:25

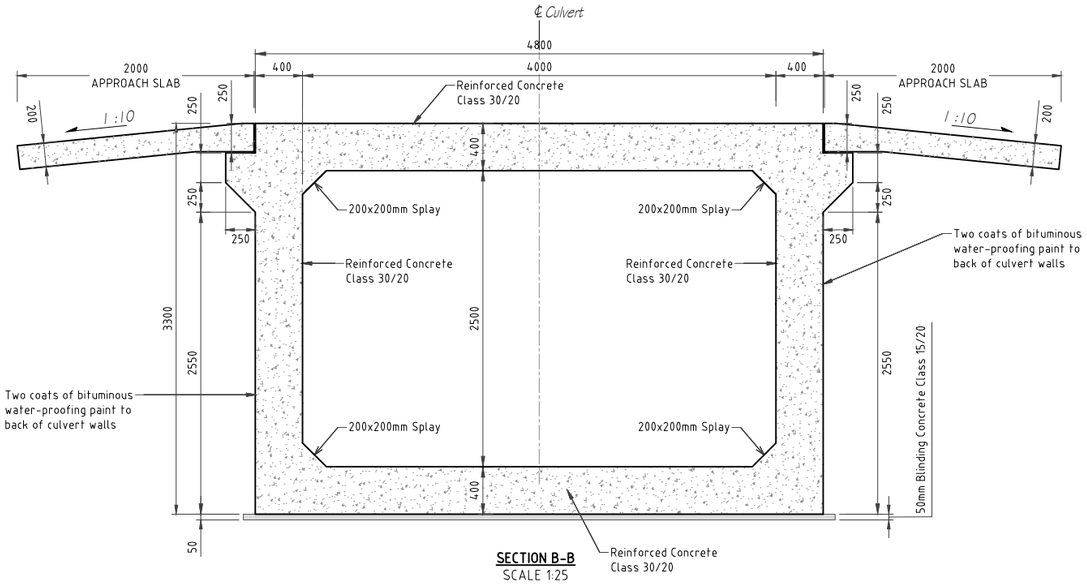

SECTION B-B
SCALE 1:25

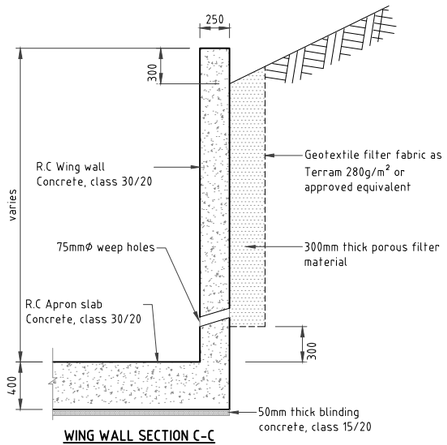

WING WALL SECTION C-C
SCALE 1:25

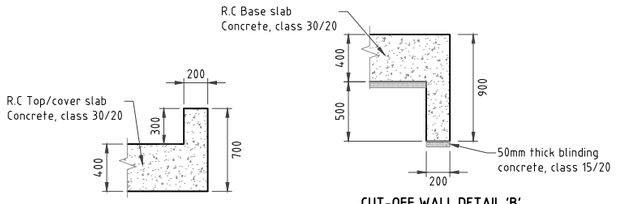

HEAD WALL DETAIL 'A'
SCALE 1:25

CUT-OFF WALL DETAIL 'B'
SCALE 1:25

0.25 0 0.25 0.5 0.75 1.0
SCALE 1: 25 SCALE IN m

NOTES

1. For general Notes See TYP-DRA-001

CLIENT:
Kenya National Highways Authority
Quality Highways, Better Connections
KENYA NATIONAL HIGHWAY AUTHORITY
Barabara Plaza,
Off Airport South Road,
P. O. Box, 49712 - 00100,
NAIROBI.

KENYA URBAN ROADS AUTHORITY
Barabara Plaza,
Off Airport South Road,
P. O. Box, 49712 - 00100,
NAIROBI.

FINANCIER:
THE WORLD BANK

PROJECT:
HORN OF AFRICA GATEWAY DEVELOPMENT PROJECT (HOAGDP): -
Consultancy Services for the Design and Works Supervision for the Proposed Extension of Meru Bypass.

CONTRACT NO:
KeNHA/RD/CS/D/4205/2024

CONSULTANT:
egis
One Padmore Place 6th Floor,
George Padmore Road,
P. O. Box, 76672 - 00508,
NAIROBI.

DESIGN DETAILS

Action	Name	Date
Designed By:	C.J	APRIL.2025
Drawn By:	C.J	APRIL.2025
Checked By:	S.I	APRIL.2025
Approved By:	L.R	APRIL.2025

DRAWING REVISIONS

No.	Revision Details	Reviewed	Initials	Date	Approved
		By			
		Checked			
		By			
		Checked			
		By			
		Checked			
		By			
		Checked			
		By			
		Checked			

DRAWING TITLE:
SINGLE CELL 4.0 x 2.5 BOX CULVERT
CROSS SECTION AND TYPICAL INLET & OUTLET ELEVATION

DRAWING SCALE:
AS SHOWN

DRAWING NO:
TYP-BC-003
02/03

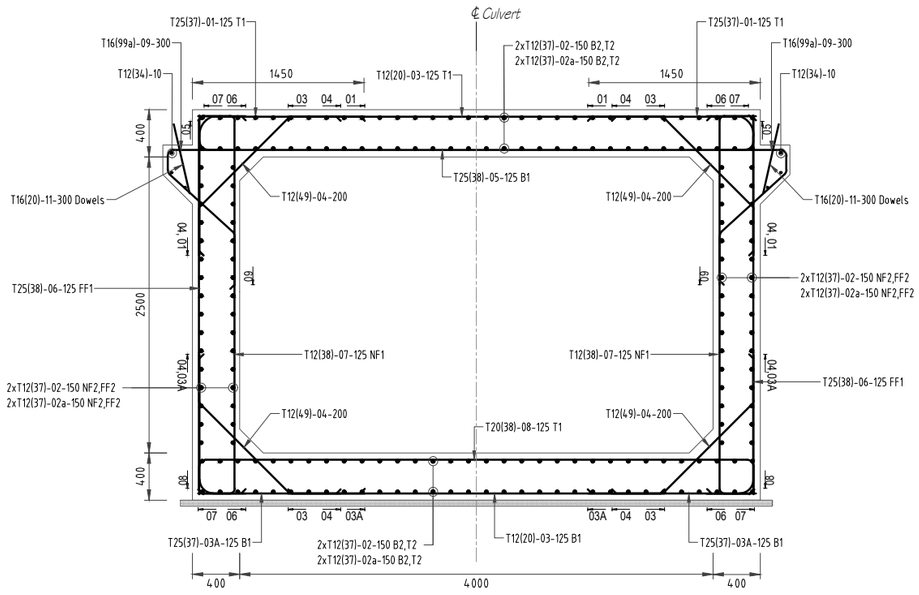

SINGLE-CELL 4.0x2.0 BOX CULVERT REINFORCEMENT DETAILS
SCALE 1:25

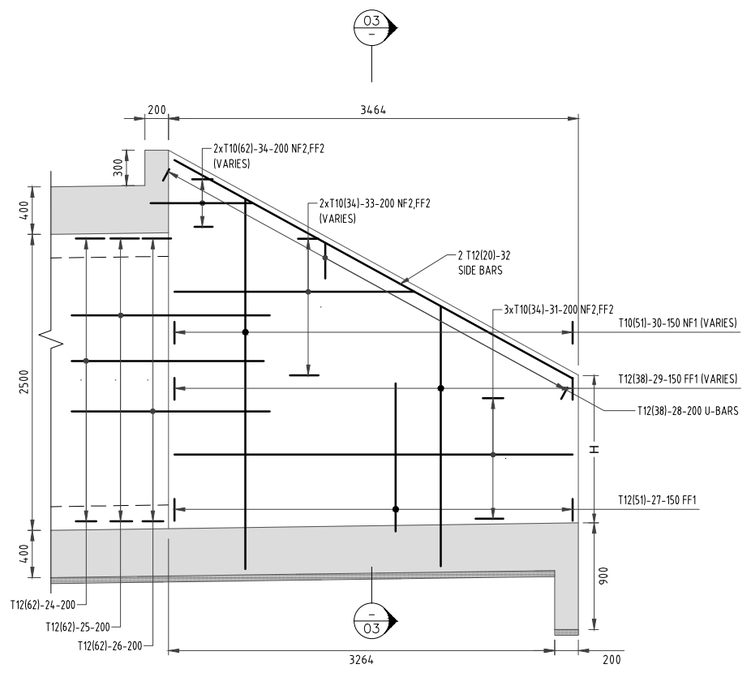

TYPICAL WING WALL REINFORCEMENT DETAILS
SCALE 1:25

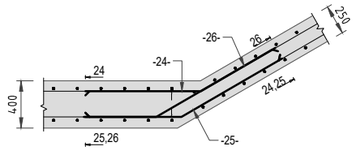

WING WALL: CORNER DETAIL
SCALE 1:25

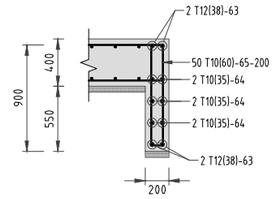

SECTION 01-01: CUT-OFF WALL REINFORCEMENT DETAILS
SCALE 1:25

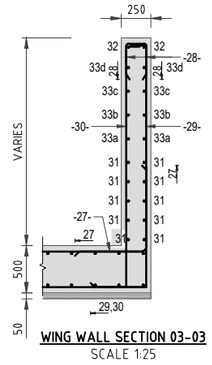

WING WALL SECTION 03-03
SCALE 1:25

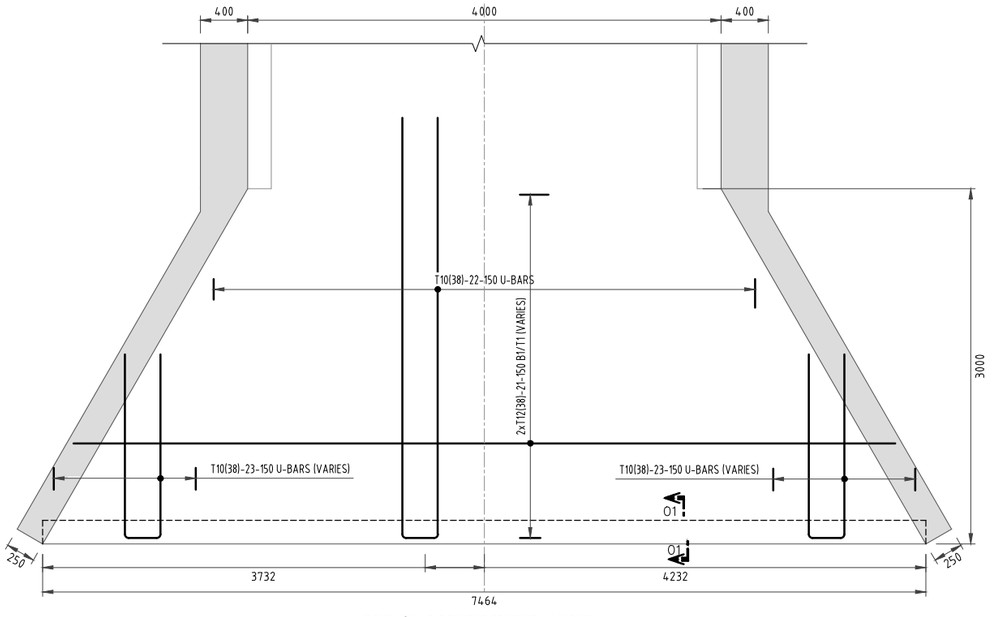

APRON SLAB REINFORCEMENT LAYOUT
SCALE 1:25

0.25 0 0.25 0.5 0.75 1.0
SCALE 1: 25 SCALE IN m

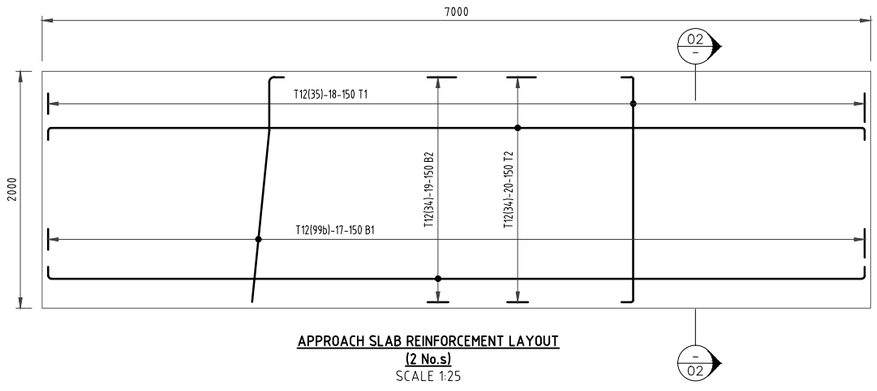

APPROACH SLAB REINFORCEMENT LAYOUT
(2 No.s)
SCALE 1:25

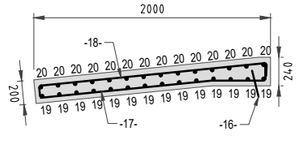

APPROACH SLAB SECTION 02-02
SCALE 1:25

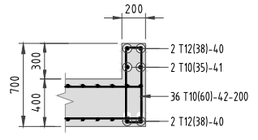

HEAD WALL DETAIL 'A': REINFORCEMENT
SCALE 1:25

NOTES
1. For general Notes See TYP-DRA-001

CLIENT:
KENYA NATIONAL HIGHWAY AUTHORITY
Barabara Plaza,
Off Airport South Road,
P. O. Box, 49712 - 00100,
NAIROBI.

KENYA URBAN ROADS AUTHORITY
Barabara Plaza,
Off Airport South Road,
P. O. Box, 49712 - 00100,
NAIROBI.

FINANCIER:
THE WORLD BANK

PROJECT:
HORN OF AFRICA GATEWAY DEVELOPMENT PROJECT (HOAGDP): -

Consultancy Services for the Design and Works Supervision for the Proposed Extension of Meru Bypass.

CONTRACT NO:
KeNHA/RD/CS/D/4205/2024

CONSULTANT:
egis
One Padmore Place 6th Floor,
George Padmore Road,
P. O. Box, 76672 - 00508,
NAIROBI.

DESIGN DETAILS

Action	Name	Date
Designed By:	C.J	APRIL.2025
Drawn By:	C.J	APRIL.2025
Checked By:	S.I	APRIL.2025
Approved By:	L.R	APRIL.2025

DRAWING REVISIONS

No.	Revision Details	Reviewed	Initials	Date	Approved
		By			
		Checked			
		By			
		Checked			
		By			
		Checked			
		By			
		Checked			
		By			
		Checked			

DRAWING TITLE:
SINGLE CELL 4.0 x 2.5 BOX CULVERT

REINFORCEMENT DETAILS

DRAWING SCALE:
AS SHOWN

DRAWING NO:
TYP-BC-003
03/03

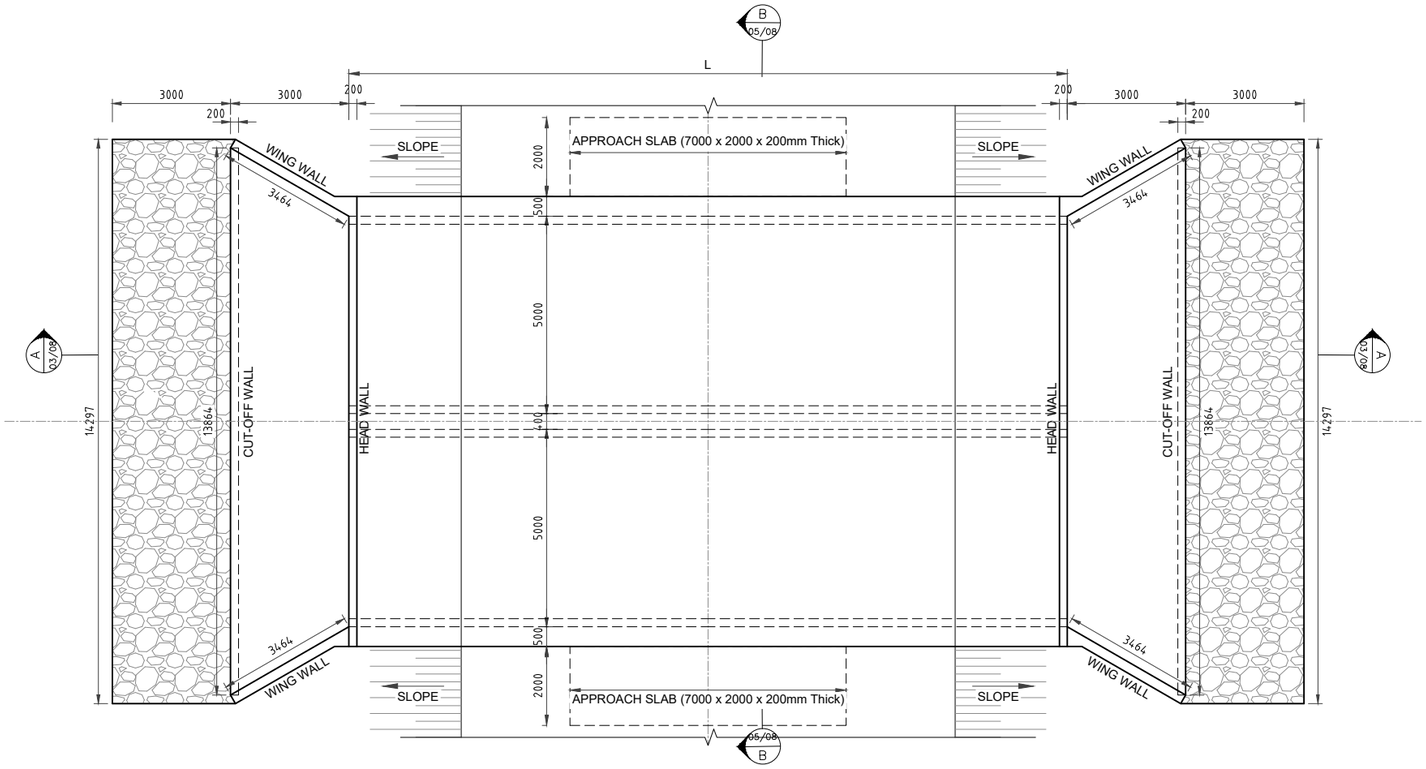

CULVERT LAYOUT PLAN
SCALE 1:75

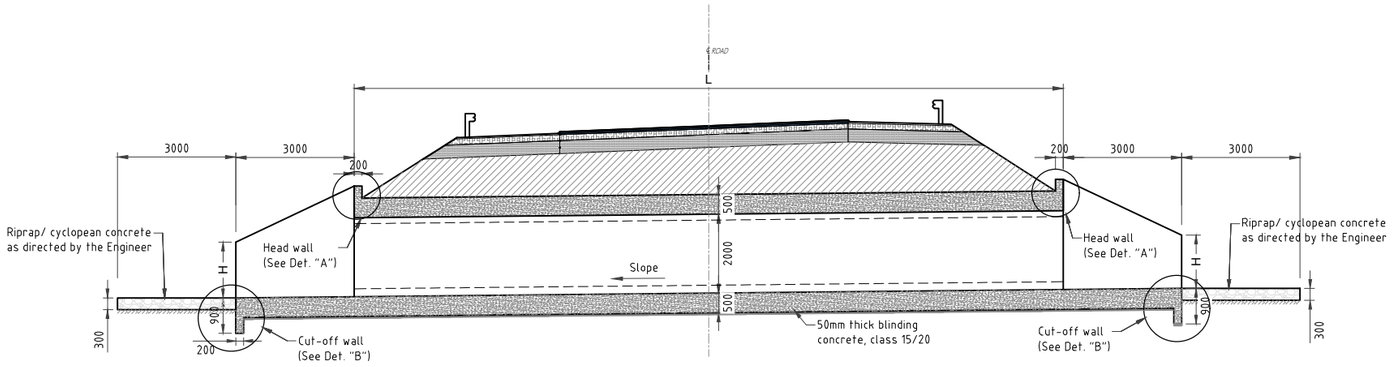

LONGITUDINAL SECTION A-A
SCALE 1:75

0.75 0 0.75 1.5 2.25 3.0
SCALE 1: 75 SCALE IN m

NOTES

1. For general Notes See TYP-DRA-001

CLIENT:

KENYA NATIONAL HIGHWAY AUTHORITY
Barabara Plaza,
Off Airport South Road,
P. O. Box, 49712 - 00100,
NAIROBI.

KENYA URBAN ROADS AUTHORITY
Barabara Plaza,
Off Airport South Road,
P. O. Box, 49712 - 00100,
NAIROBI.

FINANCIER:

THE WORLD BANK

PROJECT:

HORN OF AFRICA GATEWAY DEVELOPMENT PROJECT (HOAGDP): -

Consultancy Services for the Design and Works Supervision for the Proposed Extension of Meru Bypass.

CONTRACT NO:

KeNHA/RD/CS/D/4205/2024

CONSULTANT:

egis

One Padmore Place 6th Floor,
George Padmore Road,
P. O. Box, 76672 - 00508,
NAIROBI.

DESIGN DETAILS

Action	Name	Date
Designed By:	C.J	APRIL.2025
Drawn By:	C.J	APRIL.2025
Checked By:	S.I	APRIL.2025
Approved By:	L.R	APRIL.2025

DRAWING REVISIONS

No.	Revision Details	Reviewed	Initials	Date	Approved
		By			
		Checked			
		By			
		Checked			
		By			
		Checked			
		By			
		Checked			
		By			
		Checked			

DRAWING TITLE:

2 CELL 5.0x2.0m BOX CULVERT

LAYOUT PLAN AND LONGITUDINAL SECTION

DRAWING SCALE:

AS SHOWN

DRAWING NO:

TYP-BC-004
01/05

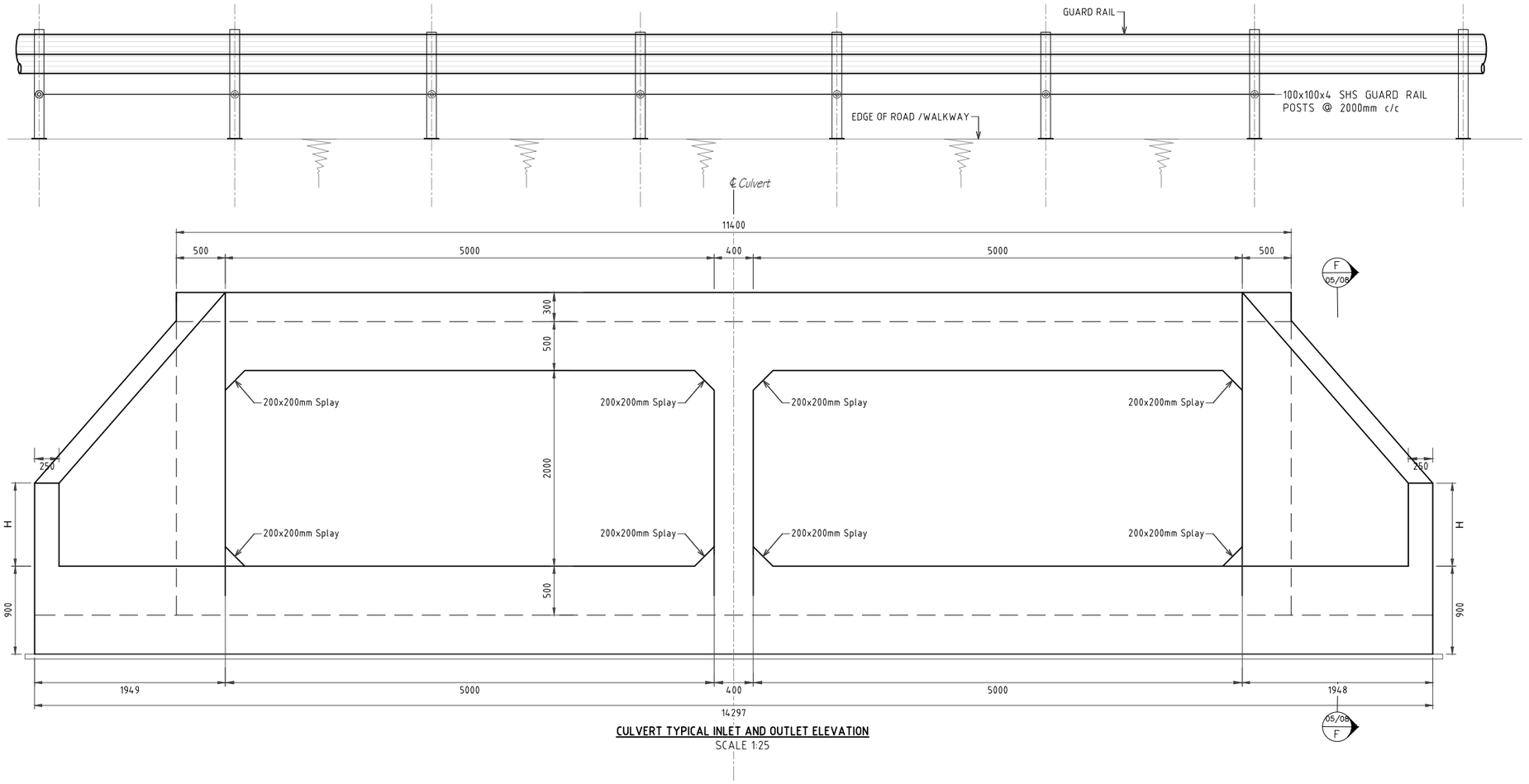

CULVERT TYPICAL INLET AND OUTLET ELEVATION
SCALE 1:25

0.25 0 0.25 0.5 0.75 1.0
SCALE 1: 25 SCALE IN m

NOTES
1. For general Notes See TYP-DRA-001

CLIENT:
KENYA NATIONAL HIGHWAY AUTHORITY
Barabara Plaza,
Off Airport South Road,
P. O. Box, 49712 - 00100,
NAIROBI.

KENYA URBAN ROADS AUTHORITY
Barabara Plaza,
Off Airport South Road,
P. O. Box, 49712 - 00100,
NAIROBI.

FINANCIER:
THE WORLD BANK

PROJECT:
HORN OF AFRICA GATEWAY DEVELOPMENT PROJECT (HOAGDP): -

Consultancy Services for the Design and Works Supervision for the Proposed Extension of Meru Bypass.

CONTRACT NO:
KeNHA/RD/CS/D/4205/2024

CONSULTANT:
egis
One Padmore Place 6th Floor,
George Padmore Road,
P. O. Box, 76672 - 00508,
NAIROBI.

DESIGN DETAILS

Action	Name	Date
Designed By:	C.J	APRIL.2025
Drawn By:	C.J	APRIL.2025
Checked By:	S.I	APRIL.2025
Approved By:	L.R	APRIL.2025

DRAWING REVISIONS

No.	Revision Details	Reviewed	Initials	Date	Approved
		By			
		Checked			
		By			
		Checked			
		By			
		Checked			
		By			
		Checked			
		By			
		Checked			

DRAWING TITLE:
2 CELL 5.0x2.0m BOX CULVERT

INLET & OUTLET ELEVATION AND SECTION

DRAWING SCALE:
AS SHOWN

DRAWING NO:
TYP-BC-004
02/05

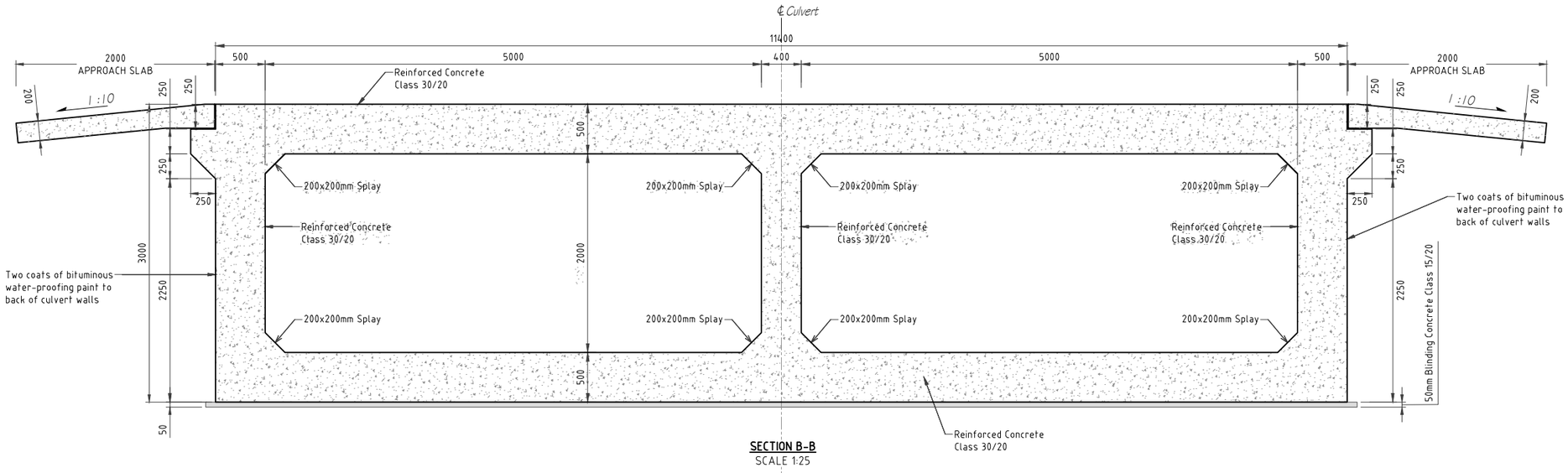

SECTION B-B
SCALE 1:25

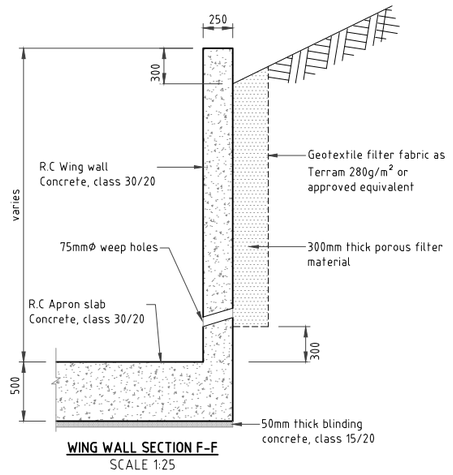

WING WALL SECTION F-F
SCALE 1:25

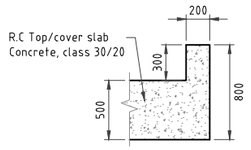

HEAD WALL DETAIL 'A'
SCALE 1:25

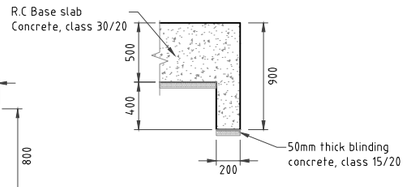

CUT-OFF WALL DETAIL 'B'
SCALE 1:25

0.25 0 0.25 0.5 0.75 1.0
SCALE 1: 25 SCALE IN m

NOTES

1. For general Notes See TYP-DRA-001

CLIENT:
KENYA NATIONAL HIGHWAY AUTHORITY
Barabara Plaza,
Off Airport South Road,
P. O. Box, 49712 - 00100,
NAIROBI.

KENYA URBAN ROADS AUTHORITY
Barabara Plaza,
Off Airport South Road,
P. O. Box, 49712 - 00100,
NAIROBI.

FINANCIER:
THE WORLD BANK

PROJECT:
HORN OF AFRICA GATEWAY DEVELOPMENT PROJECT (HOAGDP): -

Consultancy Services for the Design and Works Supervision for the Proposed Extension of Meru Bypass.

CONTRACT NO:
KeNHA/RD/CS/D/4205/2024

CONSULTANT:
egis
One Padmore Place 6th Floor,
George Padmore Road,
P. O. Box, 76672 - 00508,
NAIROBI.

DESIGN DETAILS

Action	Name	Date
Designed By:	C.J	APRIL.2025
Drawn By:	C.J	APRIL.2025
Checked By:	S.I	APRIL.2025
Approved By:	L.R	APRIL.2025

DRAWING REVISIONS

No.	Revision Details	Reviewed	Initials	Date	Approved
		By			
		Checked			
		By			
		Checked			
		By			
		Checked			
		By			
		Checked			
		By			
		Checked			

DRAWING TITLE:
2 CELL 5.0x2.0m BOX CULVERT

CULVERT CROSS SECTION

DRAWING SCALE:
AS SHOWN

DRAWING NO:
TYP-BC-004
03/05

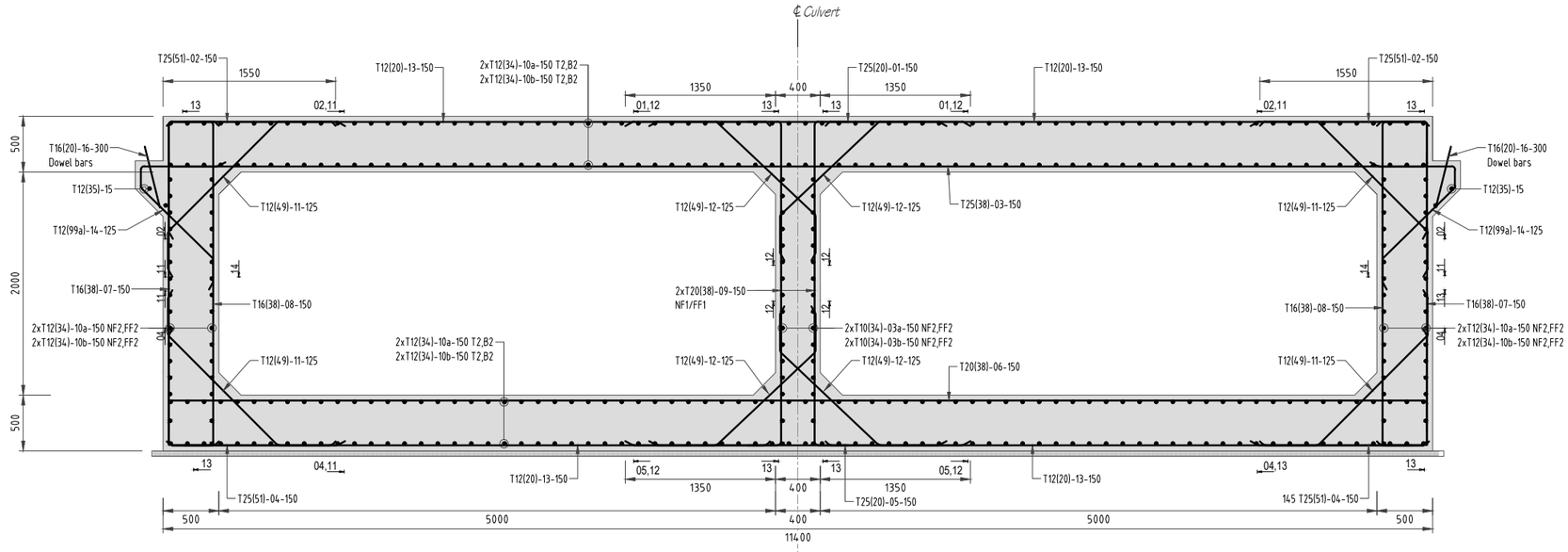

2-CELL 5.0x3.0 BOX CULVERT REINFORCEMENT DETAILS
SCALE 1:25

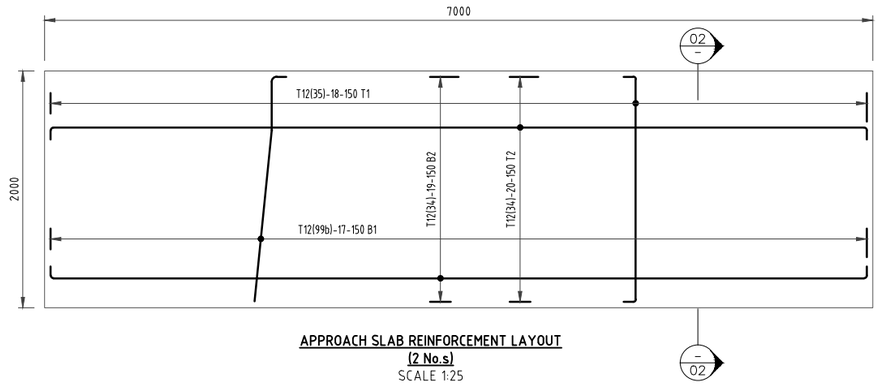

APPROACH SLAB REINFORCEMENT LAYOUT
(2 No.s)
SCALE 1:25

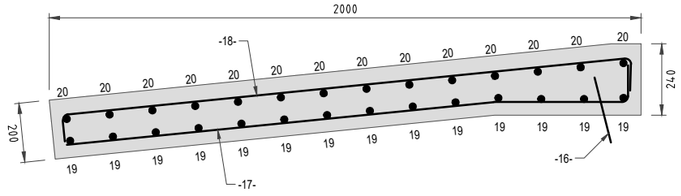

APPROACH SLAB SECTION 02-02
SCALE 1:10

0.25 0 0.25 0.5 0.75 1.0
SCALE 1: 25 SCALE IN m

NOTES
1. For general Notes See TYP-DRA-001

CLIENT:
KENYA NATIONAL HIGHWAY AUTHORITY
Barabara Plaza,
Off Airport South Road,
P. O. Box, 49712 - 00100,
NAIROBI.

KENYA URBAN ROADS AUTHORITY
Barabara Plaza,
Off Airport South Road,
P. O. Box, 49712 - 00100,
NAIROBI.

FINANCIER:
THE WORLD BANK

PROJECT:
HORN OF AFRICA GATEWAY DEVELOPMENT PROJECT (HOAGDP): -
Consultancy Services for the Design and Works Supervision for the Proposed Extension of Meru Bypass.

CONTRACT NO:
KeNHA/RD/CS/D/4205/2024

CONSULTANT:
egis
One Padmore Place 6th Floor,
George Padmore Road,
P. O. Box, 76672 - 00508,
NAIROBI.

DESIGN DETAILS		
Action	Name	Date
Designed By:	C.J	APRIL.2025
Drawn By:	C.J	APRIL.2025
Checked By:	S.I	APRIL.2025
Approved By:	L.R	APRIL.2025

DRAWING REVISIONS						
No.	Revision Details	Reviewed	Initials	Date	Approved
		By			
		Checked			
		By			
		Checked			
		By			
		Checked			
		By			
		Checked			
		By			
		Checked			

DRAWING TITLE:
2 CELL 5.0x2.0m BOX CULVERT
REINFORCEMENT DETAILS

DRAWING SCALE:
AS SHOWN

DRAWING NO:
TYP-BC-004
04/05

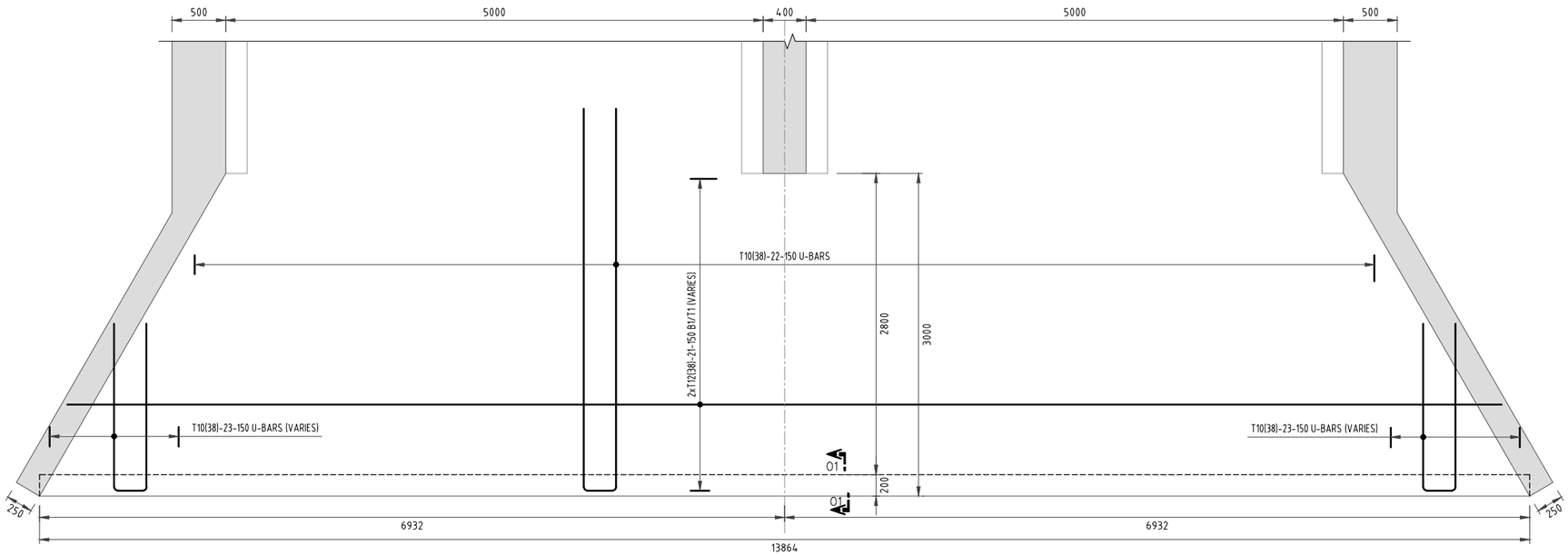

INLET APRON SLAB REINFORCEMENT LAYOUT
SCALE 1:25

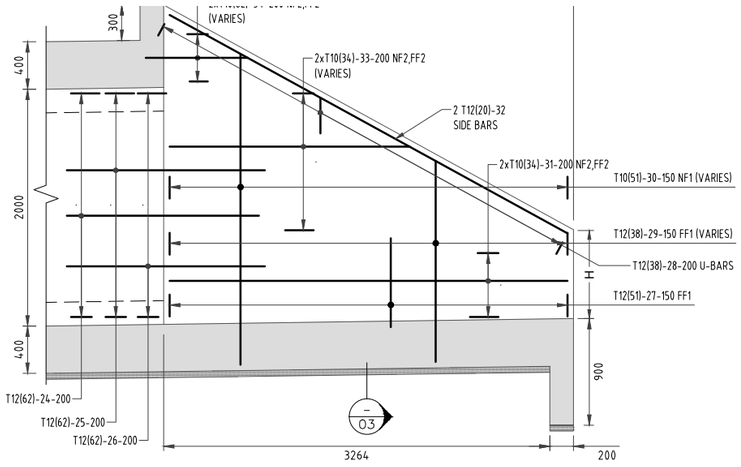

TYPICAL WING WALL REINFORCEMENT DETAILS
SCALE 1:25

WING WALL: CORNER DETAIL
SCALE 1:25

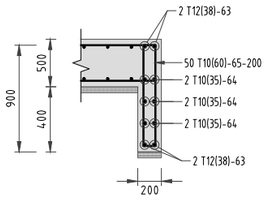

SECTION 01-01: CUT-OFF WALL REINFORCEMENT DETAILS
SCALE 1:25

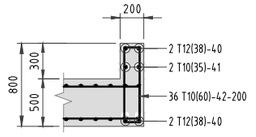

HEAD WALL DETAIL 'A': REINFORCEMENT
SCALE 1:25

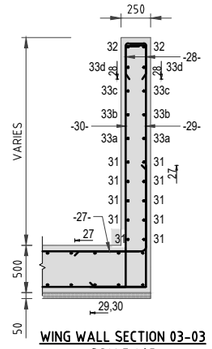

WING WALL SECTION 03-03
SCALE 1:25

0.25 0 0.25 0.5 0.75 1.0
SCALE 1: 25 SCALE IN m

NOTES

1. For general Notes See TYP-DRA-001

CLIENT:
KENYA NATIONAL HIGHWAY AUTHORITY
Barabara Plaza,
Off Airport South Road,
P. O. Box, 49712 - 00100,
NAIROBI.

KENYA URBAN ROADS AUTHORITY
Barabara Plaza,
Off Airport South Road,
P. O. Box, 49712 - 00100,
NAIROBI.

FINANCIER:
THE WORLD BANK

PROJECT:
HORN OF AFRICA GATEWAY DEVELOPMENT PROJECT (HOAGDP): -

Consultancy Services for the Design and Works Supervision for the Proposed Extension of Meru Bypass.

CONTRACT NO:
KeNHA/RD/CS/D/4205/2024

CONSULTANT:
egis
One Padmore Place 6th Floor,
George Padmore Road,
P. O. Box, 76672 - 00508,
NAIROBI.

DESIGN DETAILS

Action	Name	Date
Designed By:	C.J	APRIL.2025
Drawn By:	C.J	APRIL.2025
Checked By:	S.I	APRIL.2025
Approved By:	L.R	APRIL.2025

DRAWING REVISIONS

No.	Revision Details	Reviewed	Initials	Date	Approved
		By			
		Checked			
		By			
		Checked			
		By			
		Checked			
		By			
		Checked			
		By			
		Checked			

DRAWING TITLE:
2 CELL 5.0x2.0m BOX CULVERT

REINFORCEMENT DETAILS

DRAWING SCALE:
AS SHOWN

DRAWING NO:
TYP-BC-004
05/05

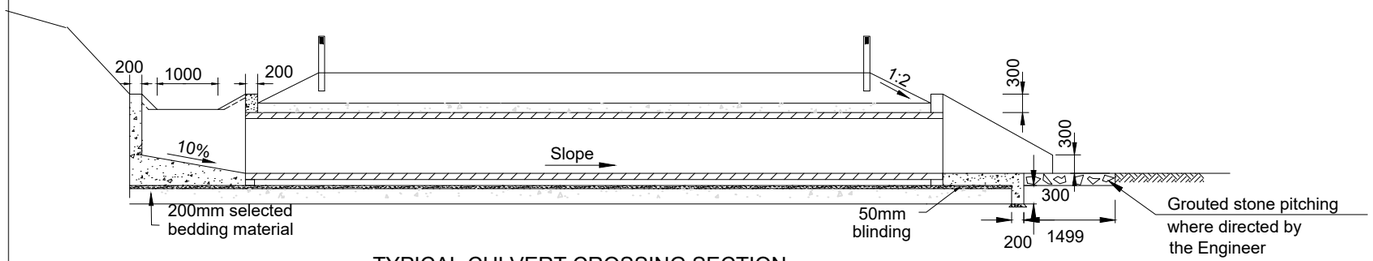

TYPICAL CULVERT CROSSING SECTION

SCALE 1:100

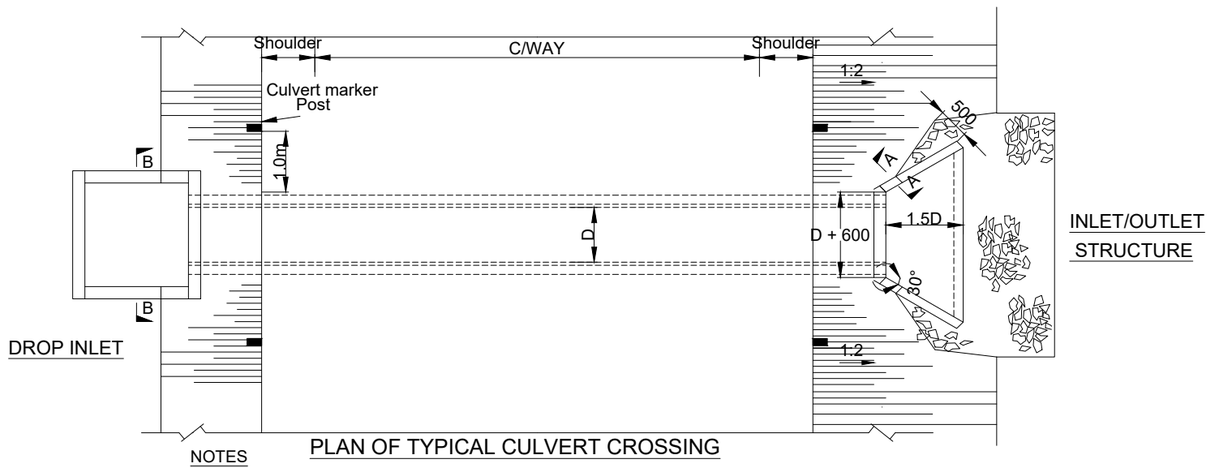

PLAN OF TYPICAL CULVERT CROSSING

NOTES

1.) Drop inlets may have one, two or three roadside drains entering
2.) Drop inlets to be located as directed by the Resident Engineer
3.) Where drop inlet is not provided inlet structure to be similar to outlet structure
4.) For concrete class and quantities of bed&surround, inlet&outlet of structure,refer to Dwg no. TYP-PC-001

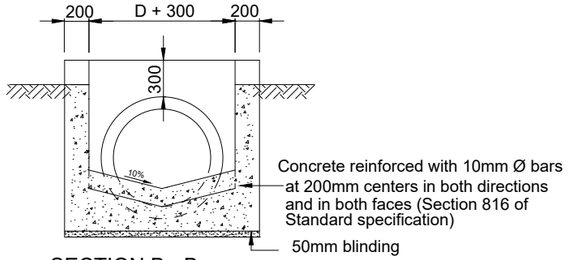

SECTION B - B

SCALE 1:50

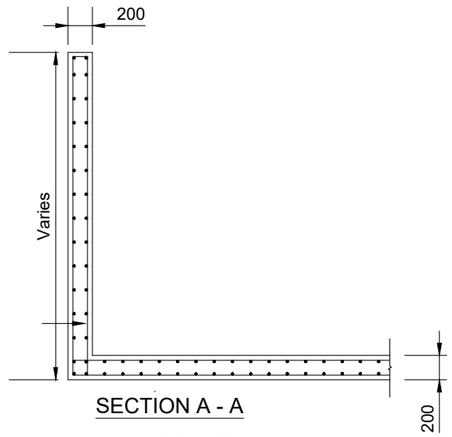

SECTION A - A

SCALE 1:50

RECOMMENDED WINGWALL SKEWS				
	PIPE SKEW			
WINGWALL	0°	15°	30°	45°
①	60°	60°	75°	75°
②	60°	45°	30°	15°
③	60°	45°	30°	15°
④	60°	60°	75°	75°

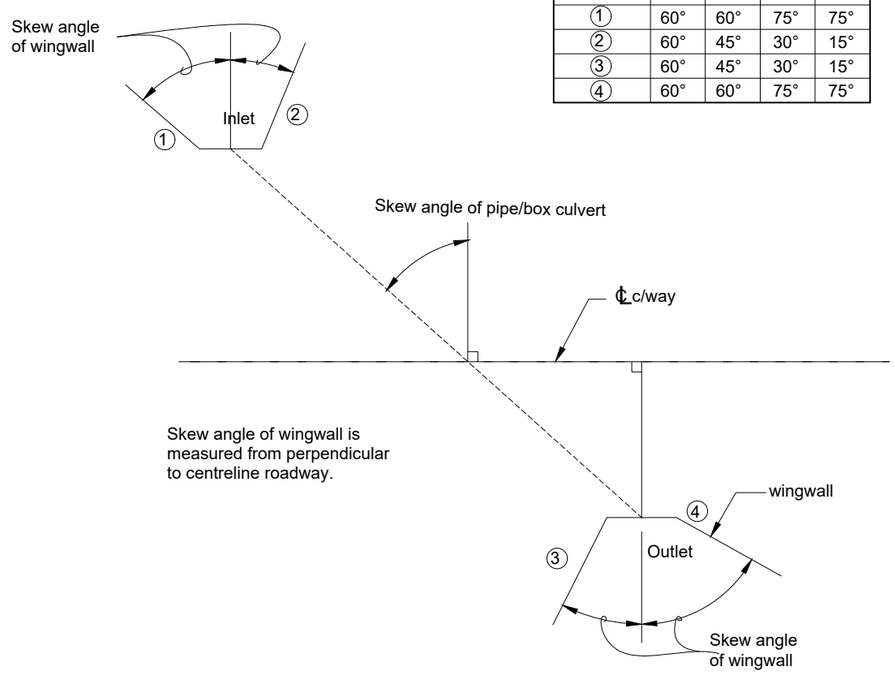

SCHEMATIC LAYOUT OF SKEW CULVERT

Note:

1.) For skew box culverts, the same dimensions of wall and slab thicknesses apply as for normal box culverts

CLIENT:

Kenya National Highways Authority — Quality Highways, Better Connections

KENYA NATIONAL HIGHWAY AUTHORITY
Barabara Plaza,
Off Airport South Road,
P. O. Box, 49712 - 00100,
NAIROBI.

KENYA URBAN ROADS AUTHORITY
Barabara Plaza,
Off Airport South Road,
P. O. Box, 49712 - 00100,
NAIROBI.

FINANCIER:

THE WORLD BANK

PROJECT:

HORN OF AFRICA GATEWAY DEVELOPMENT PROJECT (HOAGDP): -

Consultancy Services for the Design and Works Supervision for the Proposed Extension of Meru Bypass.

CONTRACT NO:

KeNHA/RD/CS/D/4205/2024

CONSULTANT:

egis

One Padmore Place 6th Floor,
George Padmore Road,
P. O. Box, 76672 - 00508,
NAIROBI.

DESIGN DETAILS		
Action	Name	Date
Designed By:	C.J	APRIL.2025
Drawn By:	C.J	APRIL.2025
Checked By:	S.I	APRIL.2025
Approved By:	L.R	APRIL.2025

DRAWING REVISIONS					
No.	Revision Details	Reviewed	Initials	Date	Approved
		By			
		Checked			
		By			
		Checked			
		By			
		Checked			
		By			
		Checked			
		By			
		Checked			

DRAWING TITLE:

STANDARD CULVERT CROSSING SKEW DETAILS

DRAWING SCALE:

AS SHOWN

DRAWING NO:

TYP-CSK-01

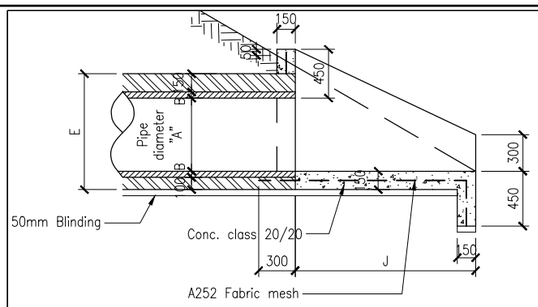

SECTION A-A

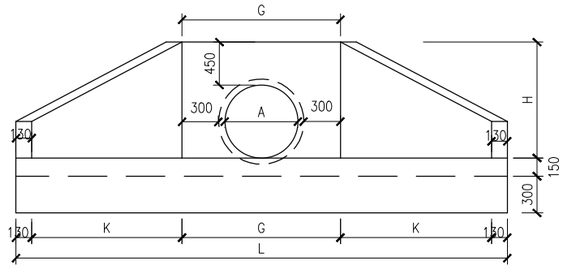

FRONT ELEVATION-SINGLE CELL

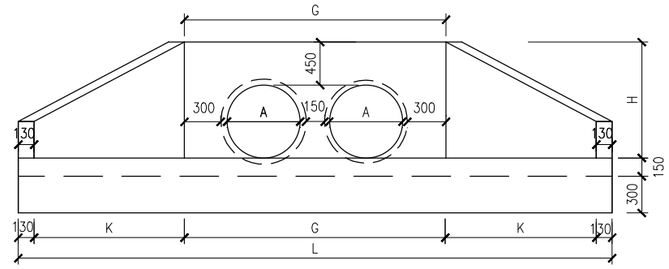

FRONT ELEVATION-MULTIPLE CELL

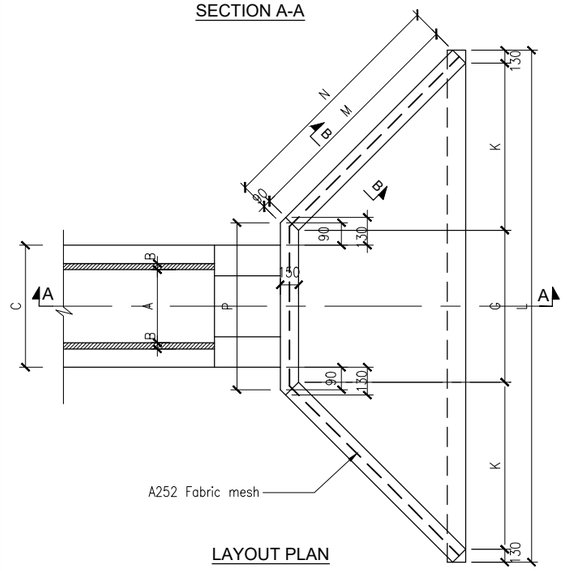

LAYOUT PLAN

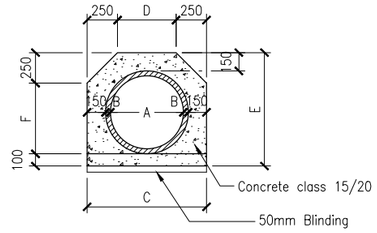

TYPICAL CONCRETE BED AND SURROUND - SINGLE CELL

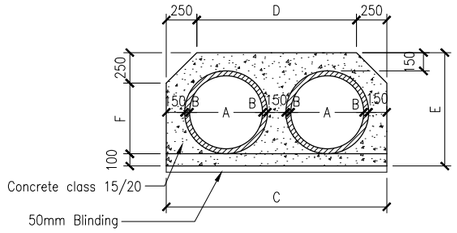

TYPICAL CONCRETE BED AND SURROUND - MULTIPLE CELL

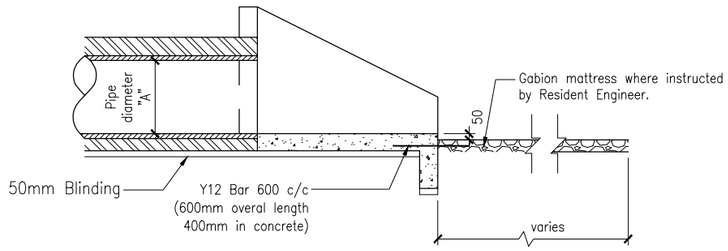

SECTION A-A (with gabion mattress shown)

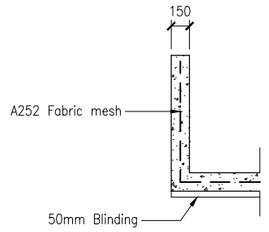

SECTION B-B

TABLE A - 1-CELL CONCRETE PIPE CULVERTS

CULVERT	A (m)	B (m)	C (m)	D (m)	E (m)	F (m)	G (m)	H (m)	J (m)	K (m)	L (m)	M (m)	N (m)	P (m)	CONCRETE CLASS 25/20 Inlet & Outlet	CONCRETE CLASS 15/20 Surround & Bed per running m
Diameter 0.60m	0.60	0.05	1.00	0.50	0.95	0.60	1.20	0.95	1.25	0.72	3.00	1.44	1.53	1.18	$1.58m^3$	$0.50m^3$
Diameter 0.90m	0.90	0.09	1.38	0.88	1.33	0.98	1.50	1.25	2.25	1.30	4.54	2.60	2.69	1.56	$4.07m^3$	$0.86m^3$
Diameter 1.20m	1.20	0.10	1.80	1.30	1.70	1.35	1.80	1.55	2.85	1.65	5.56	3.29	3.38	1.88	$5.92\ m^3$	$1.46\ m^3$

TABLE B - 2-CELL CONCRETE PIPE CULVERTS

CULVERT	A (m)	B (m)	C (m)	D (m)	E (m)	F (m)	G (m)	H (m)	J (m)	K (m)	L (m)	M (m)	N (m)	P (m)	CONCRETE CLASS 25/20 Inlet & Outlet	CONCRETE CLASS 15/20 Surround & Bed per running m
Diameter 0.60m	0.60	0.05	1.85	1.35	0.95	0.60	2.15	0.95	1.25	0.72	3.85	1.44	1.53	2.03	$2.22m^3$	$0.93m^3$
Diameter 0.90m	0.90	0.09	2.61	2.11	1.33	0.98	2.91	1.25	2.25	1.30	5.77	2.60	2.69	2.79	$4.89m^3$	$1.58m^3$
Diameter 1.20m	1.20	0.10	3.25	2.75	1.70	1.35	3.55	1.55	2.85	1.65	7.11	3.29	3.38	3.43	$7.24m^3$	$2.38m^3$

TABLE C - 3-CELL CONCRETE PIPE CULVERTS

CULVERTS	A (m)	B (m)	C (m)	D (m)	E (m)	F (m)	G (m)	H (m)	J (m)	K (m)	L (m)	M (m)	N (m)	P (m)	CONCRETE CLASS 25/20 Inlet & Outlet	CONCRETE CLASS 15/20 Surround & Bed per running m
Diameter 0.60m	0.60	0.05	2.70	2.20	0.95	0.60	3.00	0.95	1.25	0.72	4.70	1.44	1.53	2.88	$2.66m^3$	$1.35m^3$
Diameter 0.90m	0.90	0.09	3.84	3.34	1.33	0.98	4.14	1.25	2.25	1.30	7.00	2.60	2.69	4.02	$5.88m^3$	$2.30m^3$
Diameter 1.20m	1.20	0.10	4.80	4.30	1.70	1.35	5.10	1.55	2.85	1.65	8.66	3.29	3.38	4.98	$8.73m^3$	$3.48m^3$

TABLE D - 4-CELL CONCRETE PIPE CULVERTS

CULVERTS	A (m)	B (m)	C (m)	D (m)	E (m)	F (m)	G (m)	H (m)	J (m)	K (m)	L (m)	M (m)	N (m)	P (m)	CONCRETE CLASS 25/20 Inlet & Outlet	CONCRETE CLASS 15/20 Surround & Bed per running m
Diameter 0.60m	0.60	0.05	3.55	3.05	0.95	0.60	3.85	0.95	1.25	0.72	5.55	1.44	1.53	3.73	$3.08m^3$	$1.77m^3$
Diameter 0.90m	0.90	0.09	5.07	4.57	1.33	0.98	5.37	1.25	2.25	1.30	8.23	2.60	2.69	5.25	$6.87m^3$	$3.01m^3$
Diameter 1.20m	1.20	0.10	6.35	5.85	1.70	1.35	6.65	1.55	2.85	1.65	10.21	3.29	3.38	6.53	$10.21m^3$	$4.58m^3$

NOTES:

1. All dimensions are in millimetres,unless otherwise indicated
2. For location of culverts, refer to culvert schedule on Dwg. no. S/CUL/1/01–04
3. Final dimensions and culvert invets levels to be confirmed on site by the Resident Engineer.
4. Tables A,B,C&D show dimensions for single cell,double cell, 3–cell and 4–cell culverts respectively.
5. For culverts with multiple cells, the spacing of pipes to be kept at 150mm.
6. For details of gabion boxes and reno mattresses see Drawing No. DD/GP/1/01
7. For pipe culverts where d < 1.2m gabion matress may be substituted by rip–rap or grouted stone pitching as directed by the Resident Engineer.
8. Fabric mesh reinforcement to be fixed as shown and to comply with standard specification.

CLIENT:

KENYA NATIONAL HIGHWAY AUTHORITY
Barabara Plaza,
Off Airport South Road,
P. O. Box, 49712 - 00100,
NAIROBI.

KENYA URBAN ROADS AUTHORITY
Barabara Plaza,
Off Airport South Road,
P. O. Box, 49712 - 00100,
NAIROBI.

FINANCIER:

THE WORLD BANK

PROJECT:

HORN OF AFRICA GATEWAY DEVELOPMENT PROJECT (HOAGDP): -

Consultancy Services for the Design and Works Supervision for the Proposed Extension of Meru Bypass.

CONTRACT NO:

KeNHA/RD/CS/D/4205/2024

CONSULTANT:

egis

One Padmore Place 6th Floor,
George Padmore Road,
P. O. Box, 76672 - 00508,
NAIROBI.

DESIGN DETAILS

Action	Name	Date
Designed By:	C.J	APRIL.2025
Drawn By:	C.J	APRIL.2025
Checked By:	S.I	APRIL.2025
Approved By:	L.R	APRIL.2025

DRAWING REVISIONS

No.	Revision Details	Reviewed	Initials	Date	Approved
		By			
		Checked			
		By			
		Checked			
		By			
		Checked			
		By			
		Checked			
		By			
		Checked			

DRAWING TITLE:

CONCRETE PIPE CULVERTS

DRAWING SCALE:

AS SHOWN

DRAWING NO:

TYP-PC-001

MERU BY-PASS ROADS

BRIDGES

MERU POLYTECHNIC FOOTBRIDGE

No.	DRAWING TITLE	DRAWING NUMBER
1	LIST OF DRAWINGS	TYP-FB1-001
2	GENERAL NOTES	TYP-FB1-002
3	GENERAL NOTES	TYP-FB1-003
4	KEY PLAN	TYP-FB1-004
5	FOUNDATION LAYOUT AND SETTING OUT DATA	TYP-FB1-005
6	FOOT BRIDGE LAYOUT PLAN AND LONGITUDINAL ELEVATION	TYP-FB1-006
7	DECK LAYOUT PLANS	TYP-FB1-007
8	BOLTED SPLICE CONNECTIONS	TYP-FB1-008
9	DECK PANEL-1, PANEL-2 AND PANEL-3 DETAILS	TYP-FB1-009
10	DECK CORSS SECTION AND PANEL-4 & PANEL-5 DETAILS	TYP-FB1-010
11	DECK PANELS CONNECTION DETAILS	TYP-FB1-011
12	DECK SLAB DETAILS	TYP-FB1-012
13	DECK ROOF DETAILS	TYP-FB1-013
14	DECK ROOF PANELS DETAILS	TYP-FB1-014
15	PIER HEAD DETAILS	TYP-FB1-015
16	BEARINGS DETAILS	TYP-FB1-016
17	BEARINGS DETAILS	TYP-FB1-017
18	COLUMNS ELEVATIONS	TYP-FB1-018
19	COLUMNS ELEVATIONS	TYP-FB1-019
20	COLUMN-01 AND COLUMN-02 REINFORMENT DETAILS	TYP-FB1-020
21	PIER-1 AND PIER-2 REINFORCEMENT DETAILS	TYP-FB1-021
22	PIER HEAD REINFORCEMENT DETAILS	TYP-FB1-022
23	BEAMS AND RAMP SLAB REINFORCEMENT DETAILS	TYP-FB1-023
24	RAMP ROOF SLAB LAYOUT PLAN AND REINFORCEMENT DETAILS	TYP-FB1-024
25	RAMP ROOF LAYOUT AND DETAILS	TYP-FB1-025
26	STEEL HANDRAILING DETAILS	TYP-FB1-026

CLIENT:

KENYA NATIONAL HIGHWAY AUTHORITY
Barabara Plaza,
Off Airport South Road,
P. O. Box, 49712 - 00100,
NAIROBI.

KENYA URBAN ROADS AUTHORITY
Barabara Plaza,
Off Airport South Road,
P. O. Box, 49712 - 00100,
NAIROBI.

FINANCIER:

THE WORLD BANK

PROJECT:

HORN OF AFRICA GATEWAY DEVELOPMENT PROJECT (HOAGDP): -

Consultancy Services for the Design and Works Supervision for the Proposed Extension of Meru Bypass.

CONTRACT NO:

KeNHA/RD/CS/D/4205/2024

CONSULTANT:

egis

One Padmore Place 6th Floor,
George Padmore Road,
P. O. Box, 76672 - 00508,
NAIROBI.

DESIGN DETAILS

Action	Name	Date
Designed By:	I.O	AUG 2025
Drawn By:	W.O	AUG 2025
Checked By:	S.I	AUG 2025
Approved By:	S.O	AUG 2025

DRAWING REVISIONS

No.	Revision Details	Reviewed	Initials	Date	Approved
		By			
		Checked			
		By			
		Checked			
		By			
		Checked			
		By			
		Checked			
		By			
		Checked			

DRAWING TITLE:

LIST OF DRAWINGS

DRAWING SCALE:

AS SHOWN

DRAWING NO:

TYP - FB1-001

DIMENSIONS AND ELEVATIONS

- Elevations and coordinates in meters
- Dimensions in millimeters and angles in degrees, unless otherwise noted on drawings

DESIGN SPECIFICATIONS

- EN 1990: Eurocode 0, Basis of Structural Design.
- Planning and Building Regulations 2009. Volumes 2 and 4 National Planning and Building Authority Republic of Kenya

EUROCODE 1
- BS-EN 1991-1: Eurocode 1, Action on Structures, Part 1-1: General Actions, Densities, Self-weight, Imposed Loads for Buildings
- BS-EN 1992-2: Eurocode 1, Actions on Structures Part 2: Traffic Loads on Bridges
- NA to BS-EN 1991-2: 2003 UK National Annex to Eurocode 1: Actions on Structures Part 2: Traffic Loads on Bridges
- BS-EN 1991-1-4: Eurocode 1, Actions on Structures Part 1-4: General Actions, Wind Actions
- BS-EN 1991-1-5: Eurocode 1, Actions on Structures Part 1-5: General Actions, Thermal Actions

EUROCODE 2
- BS-EN 1992-1-1: Eurocode 2, Design of Concrete Structures Part 1-1: General Rules and Rules for Buildings
- BS-EN 1992-1-2: Eurocode 2, Design of Concrete Structures Part 1-2: Concrete Bridges, Design and Detailing Rules

EUROCODE 3
- BS-EN 1993-1-1: Eurocode 3, Design of Steel Structures, Part 1-1: General Rules for Buildings
- BS-EN 1993-1-5: Eurocode 3, Design of Steel Structures, Part 1-5: Plated Structural Elements
- BS-EN 1993-1-8: Eurocode 3, Design of Steel Structures, Part 1-8: Design of Joints
- BS-EN 1993-2: Eurocode 3, Design of Steel Structures Part 2: Steel Bridges

EUROCODE 4
- BS-EN 1994-1-1: Eurocode 4, Design of Composite Steel and Concrete Structures, Part 1-1: General Rules and Rules for Buildings.
- BS-EN 1994-2: Eurocode 4, Design of Composite Steel and Concrete Structures, Part 2: General Rules and Rules for Bridges.

EUROCODE 8
- BS-EN 1998-1: Eurocode 8, Design of Structures for Earthquakes Resistance. Part 1: General Rules, Seismic Actions and Rules for Bridges.
- BS-EN 1998-2: Eurocode 8, Design of Structures for Earthquakes Resistance. Part 2: Bridges.

BS EN 12056-3
- Gravity Drainage Systems Inside Buildings. Part 3: Roof Drainage, Layout and Calculations

DESIGN METHODOLOGY

- Partial Safety, Factor method using service and ultimate limit states

DESIGN LOADINGS

PERMANENT LOADS
- BS-EN 1991-1: Eurocode 1, Action on Structures, Part 1-1: General Actions, Densities, Self-weight, Imposed Loads for Buildings
  - Self Weight of Steel: 77 kN/m^3
  - Self Weight of Reinforced Concrete: 25 kN/m^3
  - Self Weight of Railing: 0.5 kN/m^3

CONCRETE SHRINKAGE AND CONCRETE CREEP
- BS-EN 1992-1-1: Eurocode 2, Design of Concrete Structures Part 1-1: General Rules and Rules for Buildings
- BS-EN 1992-1-2: Eurocode 2, Design of Concrete Structures Part 1-1: Concrete Bridges, Design and Detailing Rules

PEDESTRIAN LOADS
- BS-EN 1992-2: Eurocode 1, Actions on Structures Part 2: Traffic Loads on Bridges
- Uniformly distributed load, Q_{fk}, shall be defined and applied only in the unfavorable parts of the influence surface, longitudinally and transversely. The characteristic value of the load shall be Q_{fk}: 5 kN/m^2
- A concentrated load Q_{fwk}. The characteristic value of this load shall be Q_{fwk}: 10 kN acting on a square surface of sides 0.10 m. This load shall be taken into account only for local effects.
- Horizontal force Q_{flk} shall be taken into account, equal to the 10 per cent of the total load corresponding to the uniformly distributed load Q_{fk}.
- Horizontal force is considered acting along the bridge deck axis at the pavement level and acting simultaneously with the corresponding vertical load, and in no case with the concentrated load Q_{fwk}.

WIND LOAD
- The fundamental value of the basic wind velocity for Meru is Vb,o: 28 m/s.

THERMAL ACTION
- BS-EN 1991-1-5: Eurocode 1, Actions on Structures Part 1-5: General Actions, Thermal Actions
- To assess the overall range of the uniform footbridge temperature, shall be considered a minimum shade air temperature T_{min}: 5°C and a maximum shade air temperature T_{max}: 30°C.

EARTHQUAKE LOAD
- BS-EN 1998-1: Eurocode 8, Design of Structures for Earthquakes Resistance. Part 1: General Rules, Seismic Actions and Rules for Bridges.
- BS-EN 1998-2: Eurocode 8, Design of Structures for Earthquakes Resistance. Part 2: Bridges.

MANUFACTURING

- All main steelwork shall be executed in accordance with execution class EXC 3 (BS-EN 1090-2).
- Tube handrailing, steel landings and steel steps shall be executed in accordance with execution Class EXC 2 IBS-EN 1090-2).

CONSTITUENT STEEL MATERIALS

STRUCTURAL STEEL

STEEL QUALITY	STANDARD	Minimum Yield Strength (MPa)	Tensile Strength MPa	REMARKS
S355	BS-EN 10025-2	355	470 to 630	The grade and quality of each structural steel component is specified on the drawings
	BS-EN 10025-3			
S275	BS-EN 10025-2	275	410 to 560	

TUBE HANDRAILING

STEEL QUALITY	STANDARD	Minimum Yield Strength (MPa)	Tensile Strength MPa	REMARKS
S235 JR	BS-EN 10025-2	235	360 to 510	Handrail, posts, bottom rail and baluster. Technical delivery conditions and tolerances, dimensions and sectional properties BS-EN 10219-1/10219-2
S275	BS-EN 10025-2	275	410 to 560	Toe base plates

STEEL DECKING (Non-Composite)

- Steel decking formwork shall be formed from hot dip galvanized and steel coil, quality S250GD +Z 275 according to BS-EN 10346. Visible areas coated with powder paint layer of pure polyster resin.

STEEL ROOFING

- Profiled steel roofing flashings, gutters and accesories shall be formed from hot dip galvanized and steel coil, quality S250GD +Z 275 according to BS-EN 10346 and top/bottom sides organic coated with polyester in accordance with BS-EN 10169.

WELDING

- All welded joints shall be factory welded in a controlled environment, and welds will be applied by skilled welders using specialist equipment to achieve highest possible standards, as specified in relevant code of practice. No welding of structural connections will be carried out on site, unless special exception for a specific part/spot on a structural component is requested and approval granted by the Engineer.
- Welding shall be undertaken in accordance with the requirement of the relevant part of BS-EN ISO 3834 Part 2, unless noted otherwise on drawings.
- All welding consumables shall conform to the requirements to BS-EN 13479 and the appropriate product standard as listed in BS-EN 1090-2.
- The type of welding consumables shall be appropriate to the welding process, the material to be welded and the welding process.
- Weld symbol shall be in accordance with BS-EN 2553.
- The throat (A) is the shortest distance from the joint root to the hypotenuse (straight line drawn toe to toe) of the largest right triangle that can be drawn within the fillet weld cross section.
- Workmanship, techniques, qualifications and inspection shall be in accordance with BS-EN 1090-2.
- All weld shall be fillet weld type, 8mm nominal throat thickness and continuous, unless noted otherwise on the drawings.
- Acceptance criteria for welding execution according to BS-EN 5817 Quality Level B. The acceptance criteria for excessive throat thickness" (5214) shall be quality Level D.

STUD SHEAR CONNECTORS

- Stud shear connectors shall be conformed to requirement of BS-EN 13918.

SHEAR CONNECTOR	STANDARD	Minimum Yield Strength (MPa)	Tensile Strength MPa	Minimum Elongation %
Type SD1	BS-EN 13918	350	450	15%

- Stud welding shall be carried in accordance with BS-EN ISO 14555.

STRUCTURAL BOLTS, NUTS AND WASHERS

- All structural bolting assemblies to be made with the following types:

TYPE	STANDARD	QUALITY	STANDARD	ASSEMBLIES
Structural Bolting for preloading	BS-EN 14399 Type HV	10.9	BS-EN 898-1	Bolt BS-EN 14399-4 Nut BS-EN 14399-4 Washer BS-EN 14399-5 Washer BS-EN 14399-6 Washer BS-EN 14399-9
Structural Bolting for non-preloading	BS-EN 15048	5.8/6.8	BS-EN 898-1	Bolt BS-EN 4017 Nut BS-EN 4032 Washer BS-EN 7089

- Bolts, nuts, plain and chamfered washers shall be hot dip galvanized according to BS-EN ISO 10684
- Direct tension indicator washers shall be sheradized according with BS-EN 13811 or BS-EN ISO 17668.

FOUNDATION BOLTS

- Foundation bolts shall conform to the following requirements:

FOUNDATION BOLT TYPE	Minimum Yield Strength (MPa)	Tensile Strength MPa	REMARKS
Thread bars	500	550	Left hand thread on full length

- Type and quality of anchor nuts, lock nuts, anchor plates and washers shall be in accordance with quality of thread bars.

STRUCTURAL BEARINGS

- Structural elastomeric bearings shall be designed in accordance with BS-EN 1337-1 and manufacturing according to BS-EN 1337-3.
- EXPANSION JOINT
- Expansion joints in steel deck shall be preformed elastomeric comression seal type.
- Elastomeric material shall be EPDM (synthetic rubber) with a minimum durometer hardness 60 (AST D 2240).

SURFACE TREATMENT

- The surface treatment for footbridge steelwork shall be C5M H (high durability) according to BS-EN 12944-6. Unless otherwise noted in drawings, type of paint, dry film thickness ranges shall be as specified in the following table:

COAT	MATERIAL	Minimum Dry Film Thickness µ	REMARKS
Surface preparation	Blast Cleaning GRADE 21/2		According to BS-EN ISO 8501-1
First Coat-Blast Primer	Two Component universal epoxy paint	120 µ	Hempadur Quattro 17634 or Equivalent
2nd Coat -Undercoat	Two Component universal epoxy paint	120 µ	Hempadur Quattro 17634 or Equivalent
3rd Coat -Gloss Finish	Two Component glossy acrylic polyurethane top coat	80 µ	Hempathane HS 55610 or equivalent

- Coatings or coating systems applied on faying surfaces, splices and fill plates of steelwork for preloading bolting assemblies shall satisfy requirements for the specified slip friction coefficient of 0.4 (see table 8.4 table 18 EN 1090-2). The first coating shall be alkali-zinc silicate paint with a thickness of 50mm to 80mm, hempel gavosil or equivalent.
- The surface treatment with alkali-zinc silicate paint shall be applied to both side of splice and fill plates.
- Alkali-zinc paint at connected elements shall be extended 50mm from the splice plate edge as a primer layer and painted with the three layers of the main surface treatment.
- All closed and non-accessible sections shall be painted at workshop with an epoxy-aluminum paint 70-80 µm dry film thickness.
- Steel tubes handrailing shall be galvanized according to BS-EN 1461 and externally coated with a powder painting layer of polyester resin.
- Step and steel landing shall be galvanized according to BS-EN 1461.

BOLT ASSEMBLY- PRELOADED BOLTS
TYPE-1 P.B

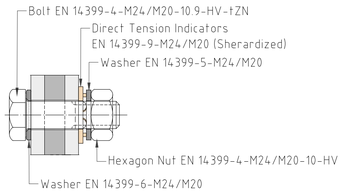

NOTE:
- Washers used under heads of preloaded bolts shall be chamfered according to EN 14399-6 and positioned with the chamfer towards the bolts heads.
- Washers according to EN 14399-5 shall only be used under nuts

BOLT ASSEMBLY- PRELOADED BOLTS
TYPE-2 P.B

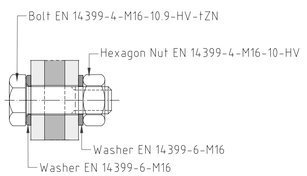

NOTE:
- Washers used under heads of preloaded bolts shall be chamfered according to EN 14399-6 and positioned with the chamfer towards the bolts heads.

BOLT ASSEMBLY- PRELOADED BOLTS
TYPE-3 P.B

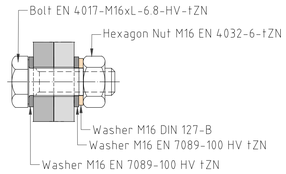

NOTE:
- Each bolt assembly with non-preloaded bolts shall be brought at least to a sung-tight condition, with special care being given to avoid over tightening.

BOLT ASSEMBLY- PRELOADED BOLTS
TYPE-4 P.B

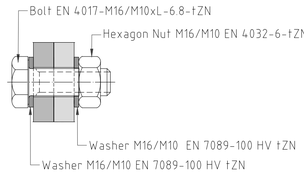

NOTE:
- Each bolt assembly with non-preloaded bolts shall be brought at least to a sung-tight condition, with special care being given to avoid over tightening.

BOLT ASSEMBLY- PRELOADED BOLTS
TYPE-5 P.B

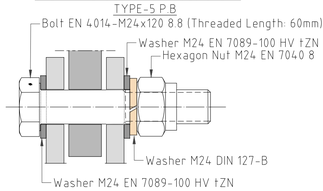

NOTE:
- Each bolt assembly with non-preloaded bolts shall be brought at least to a sung-tight condition, with special care being given to avoid over tightening.

BOLT ASSEMBLY- PRELOADED BOLTS
TYPE-6 P.B

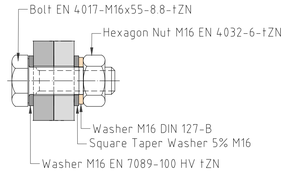

NOTE:
- Each bolt assembly with non-preloaded bolts shall be brought at least to a sung-tight condition, with special care being given to avoid over tightening.

BOLT ASSEMBLY- PRELOADED BOLTS
TYPE-7 P.B

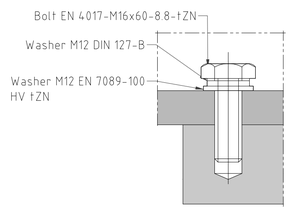

WELDING:
- Symbolic representation on drawing according to BS-EN 22553
- Quality requirement for welding BS-EN ISO 5817 Quality Level B
- Welding general tolerance BS-EN ISO 13920.

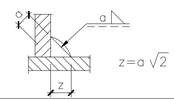

CLIENT:
KENYA NATIONAL HIGHWAY AUTHORITY
Barabara Plaza,
Off Airport South Road,
P. O. Box, 49712 - 00100,
NAIROBI.

KENYA URBAN ROADS AUTHORITY
Barabara Plaza,
Off Airport South Road,
P. O. Box, 49712 - 00100,
NAIROBI.

FINANCIER:
THE WORLD BANK

PROJECT:
HORN OF AFRICA GATEWAY DEVELOPMENT PROJECT (HOAGDP): -

Consultancy Services for the Design and Works Supervision for the Proposed Extension of Meru Bypass.

CONTRACT NO:
KeNHA/RD/CS/D/4205/2024

CONSULTANT:
egis
One Padmore Place 6th Floor,
George Padmore Road,
P. O. Box, 76672 - 00508,
NAIROBI.

DESIGN DETAILS

Action	Name	Date
Designed By:	I.O	AUG 2025
Drawn By:	W.O	AUG 2025
Checked By:	S.I	AUG 2025
Approved By:	S.O	AUG 2025

DRAWING REVISIONS

No.	Revision Details	Reviewed	Initials	Date	Approved
		By			
		Checked			
		By			
		Checked			
		By			
		Checked			
		By			
		Checked			
		By			
		Checked			

DRAWING TITLE:
GENERAL NOTES

DRAWING SCALE:
AS SHOWN

DRAWING NO:
TYP - FB1-002

SETTING OUT

- The setting out details and levels of all structures shall be checked and approved by the Engineer prior to any construction work.

FOUNDATION LEVELS

- Any foundation levels shown on the drawings are tentative and all structures will be required to be founded at a level and in a stratum to be determined on site by the Engineer.

EXCAVATION

- All excavations shall be excavated to the lines and depth directed by the Engineer. All excavations to be approved by the Engineer prior to any construction work including laying of blinding concrete.

FILLING

- Filling for structures shall be selected material, directed by the Engineer brought up in horizontal layers not exceeding 150mm compacted thickness.
- Each layer shall be thoroughly mixed, watered, dried as necessary, and compacted to a minimum dry density of 95% MDD (AASHTO T99).

CONCRETE

- The following concrete grades shall be used (maximum size of aggregate in mm indicated in bracket).
  Grade 15 (20) - Blinding
  Grade 30 (20) - Foundations, Pier Columns, Pier Cap, Deck Slab, Ramp Slab, Ramp Beams, Columns, Roof Beams & Roof Slab

- Concrete shall not be placed before the Engineer's approval of the formwork and reinforcement has been given.
- All concrete shall be thoroughly compacted by internal vibration to produce a dense uniform mass without segregation and without voids.

REINFORCEMENTS

- High Tensile ribbed steel bars (grade 500) shall comply with B.S. 4461.
- The following nomenclature is used on the reinforcement drawings :- 25T12-38-250 B.F where :-

25	= Number of bars	N.F	= Near Face
T	= Square twisted bars	L.F.	= Lower face
250	=Bar spacing	A.B.S.	= Alternate Bars Staggered
R	= Mild steel bars.	I.F.	= Inner face.
12	= Diameter of bars in mm	O.F.	= Outer face.
38	= Bar mark	A.W	= Alternate with
B1	= Bottom bars, first layer	F.F.	= Far Face
B.F	= Both faces.	L.L.	= Lower layer.
U.F	= Upper face	U.L.	= Upper layer.
B2	= Bottom bars, second layer	T1	= Top bars, first layer
T2	= Top bars, second layer		

- All steel bending dimensions to be in accordance with B.S. 4466 as shown below.
  Min. diameter of bend radius = D
  Diameter of reinforcement bar = d
  For d = 6,8,10,12 and 16 mm, D = 6xd
  For d = 20 and 25 mm, D = 8xd

- Lap length of all bars shall be 50 times diameter of the smaller bar lapped.
- All bars to be bent cold and no bars shall be straightened or bent again after having been bent.
- No splice shall be made in reinforcement except where shown on drawings or as agreed with the Engineer before concrete is placed.

BAR CUTTING AND BENDING

- Total Bar Cutting Lengths are specified in multiples of 25mm and shown in meters (m).
- r indicates the minimum value in Table 3 of BS 4466.
- The dimensions in parenthesis are the free dimensions
- To avoid separate equations for each steel grade and bending radius, simplified Total Length formulae are used for shape Codes 61, 77, 79 and 82. These formulae are necessarily appropriate
- The Length formula is approximate and when bending angles exceed 45º, the length should be calculated more accurately allowing for the difference between the specified overall dimensions and the true length measured along the central axis of the bar or wire. When the bending angle approaches 90º, it is preferable to specify Shape Code 99 with a fully dimensional sketch (It shall be shown on the reinforcement detailed drawing).
- Bar spacings stipulated are the maximum allowable as the space available may dictate, the bars may need to be redistributed evenly over an area
- The minimum former radii, bend anf hook allowances are as follows:

d	r	n	h
6	18	100	100
8	24	100	100
10	30	100	110
12	36	100	140
16	48	100	180
20	60	110	220
25	100	180	350
32	128	230	450
40	160	280	560
50	200	350	700

CONSTRUCTION JOINT

- The position and form of any construction joint shall be as shown on drawings or as agreed with the Engineer before concrete is placed.

CONCRETE COVER TO REINFORCEMENT

- The concrete cover to reinforcement bars shall be as follows if not otherwise shown :-
  Superstructures = 35 mm
  Substructures and bases = 50 mm.

FORMWORK

- All formwork shall be approved by the Engineer.
- All concrete sharp corners to have 25x25 mm chamfers.

PROTECTION AND CURING OF CONCRETE

- The concrete surface shall immediately after completion be protected from the harmful effects of sun, drying, winds, rains, running water and shocks. It shall be kept damp for at least 5 days as follows :-
- Vertical faces and underside horizontal surfaces: The formwork shall be left in place, and sprayed with water regularly.
- Top/Exposed Horizontal surfaces: They shall be kept damp through a well soaked layer of sand

CLIENT:

KENYA NATIONAL HIGHWAY AUTHORITY
Barabara Plaza,
Off Airport South Road,
P. O. Box, 49712 - 00100,
NAIROBI.

KENYA URBAN ROADS AUTHORITY
Barabara Plaza,
Off Airport South Road,
P. O. Box, 49712 - 00100,
NAIROBI.

FINANCIER:

THE WORLD BANK

PROJECT:

HORN OF AFRICA GATEWAY DEVELOPMENT PROJECT (HOAGDP): -

Consultancy Services for the Design and Works Supervision for the Proposed Extension of Meru Bypass.

CONTRACT NO:

KeNHA/RD/CS/D/4205/2024

CONSULTANT:

One Padmore Place 6th Floor,
George Padmore Road,
P. O. Box, 76672 - 00508,
NAIROBI.

DESIGN DETAILS

Action	Name	Date
Designed By:	I.O	AUG 2025
Drawn By:	W.O	AUG 2025
Checked By:	S.I	AUG 2025
Approved By:	S.O	AUG 2025

DRAWING REVISIONS

No.	Revision Details	Reviewed	Initials	Date	Approved
		By			
		Checked			
		By			
		Checked			
		By			
		Checked			
		By			
		Checked			
		By			
		Checked			

DRAWING TITLE:

GENERAL NOTES

DRAWING SCALE:

AS SHOWN

DRAWING NO:

TYP - FB1-003



FOOTBRIDGE KEY PLAN

SCALE 1:200

CLIENT:

Kenya National Highways Authority

Quality Highways, Better Connections

KENYA NATIONAL HIGHWAY AUTHORITY
Barabara Plaza,
Off Airport South Road,
P. O. Box, 49712 - 00100,
NAIROBI.

KENYA URBAN ROADS AUTHORITY
Barabara Plaza,
Off Airport South Road,
P. O. Box, 49712 - 00100,
NAIROBI.

FINANCIER:

THE WORLD BANK

PROJECT:

HORN OF AFRICA GATEWAY DEVELOPMENT PROJECT (HOAGDP): -

Consultancy Services for the Design and Works Supervision for the Proposed Extension of Meru Bypass.

CONTRACT NO:

KeNHA/RD/CS/D/4205/2024

CONSULTANT:

egis

One Padmore Place 6th Floor,
George Padmore Road,
P. O. Box, 76672 - 00508,
NAIROBI.

DESIGN DETAILS		
Action	**Name**	**Date**
Designed By:	**LO**	**AUG 2025**
Drawn By:	**W.O**	**AUG 2025**
Checked By:	**S.I**	**AUG 2025**
Approved By:	**S.O**	**AUG 2025**

DRAWING REVISIONS					
No.	**Revision Details**	**Reviewed**	**Initials**	**Date**	**Approved**
		By			
		Checked			
		By			
		Checked			
		By			
		Checked			
		By			
		Checked			
		By			
		Checked			

DRAWING TITLE:

FOOTBRIDGE LOCATION PLAN

DRAWING SCALE:

AS SHOWN

DRAWING NO:

TYP - FB1-004

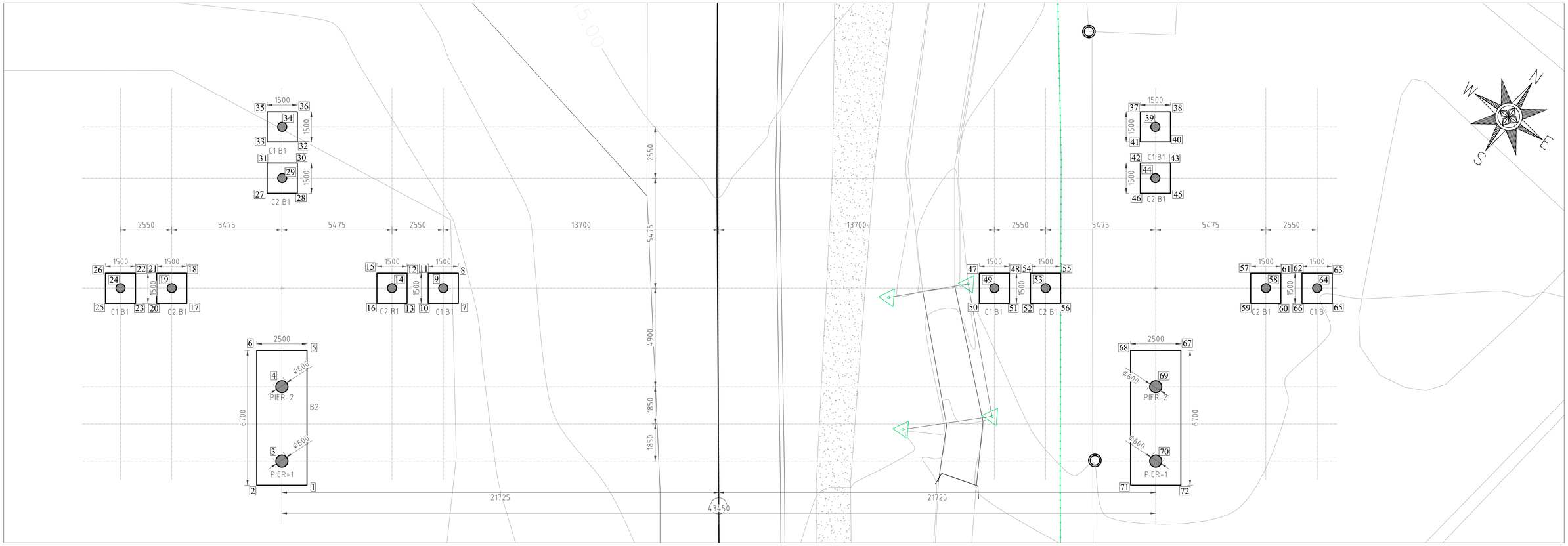

FOUNDATION AND SETTING OUT LAYOUT & DATA

SCALE 1:100

SETTING OUT DATA: COORDINATES (Arc 1960)

POINT NO.	EASTING (m): X - Coordinates in (m)	NORTHING (m): Y - Coordinates in (m)	POINT NO.	EASTING (m): X - Coordinates in (m)	NORTHING (m): Y - Coordinates in (m)	POINT NO.	EASTING (m): X - Coordinates in (m)	NORTHING (m): Y - Coordinates in (m)	POINT NO.	EASTING (m): X - Coordinates in (m)	NORTHING (m): Y - Coordinates in (m)	POINT NO.	EASTING (m): X - Coordinates in (m)	NORTHING (m): Y - Coordinates in (m)
1	347458.084	7108.442	16	347455.839	7117.873	31	347447.396	7120.545	46	347484.065	7143.833	61	347492.081	7144.504
2	347456.021	7107.030	17	347448.041	7112.534	32	347448.040	7122.259	47	347479.704	7136.030	62	347492.948	7145.097
3	347456.375	7108.726	18	347447.194	7113.772	33	347446.803	7121.412	48	347480.942	7136.877	63	347494.185	7145.945
4	347454.284	7111.779	19	347446.998	7112.729	34	347446.998	7122.454	49	347480.747	7135.835	64	347493.990	7144.902
5	347454.299	7113.970	20	347446.803	7111.687	35	347445.955	7122.650	50	347480.551	7134.792	65	347495.033	7144.707
6	347452.236	7112.558	21	347445.956	7112.924	36	347447.193	7123.497	51	347481.797	7135.645	66	347493.795	7143.859
7	347459.180	7120.161	22	347445.090	7112.331	37	347481.777	7147.175	52	347482.656	7136.233	67	347490.151	7138.517
8	347458.333	7121.398	23	347445.933	7111.091	38	347483.015	7148.022	53	347482.851	7137.275	68	347488.088	7137.104
9	347458.138	7120.356	24	347444.894	7111.289	39	347482.820	7146.980	54	347481.808	7137.471	69	347490.137	7136.325
10	347457.943	7119.313	25	347444.699	7110.246	40	347483.862	7146.785	55	347483.046	7138.318	70	347492.227	7133.272
11	347457.095	7120.551	26	347443.852	7111.484	41	347482.624	7145.937	56	347483.893	7137.080	71	347491.873	7131.576
12	347456.229	7119.958	27	347448.243	7119.308	42	347483.218	7145.071	57	347490.843	7143.657	72	347493.936	7132.988
13	347457.076	7118.720	28	347449.481	7120.155	43	347484.455	7145.918	58	347491.886	7143.461			
14	347456.034	7118.915	29	347448.423	7120.340	44	347484.260	7144.876	59	347491.691	7142.419			
15	347454.991	7119.110	30	347448.633	7121.393	45	347485.303	7144.681	60	347492.929	7143.266			

CLIENT:

KENYA NATIONAL HIGHWAY AUTHORITY
Barabara Plaza,
Off Airport South Road,
P. O. Box, 49712 - 00100,
NAIROBI.

KENYA URBAN ROADS AUTHORITY
Barabara Plaza,
Off Airport South Road,
P. O. Box, 49712 - 00100,
NAIROBI.

FINANCIER:

THE WORLD BANK

PROJECT:

HORN OF AFRICA GATEWAY DEVELOPMENT PROJECT (HOAGDP): -

Consultancy Services for the Design and Works Supervision for the Proposed Extension of Meru Bypass.

CONTRACT NO:

KeNHA/RD/CS/D/4205/2024

CONSULTANT:

egis

One Padmore Place 6th Floor,
George Padmore Road,
P. O. Box, 76672 - 00508,
NAIROBI.

DESIGN DETAILS

Action	Name	Date
Designed By:	I.O	AUG 2025
Drawn By:	W.O	AUG 2025
Checked By:	S.I	AUG 2025
Approved By:	S.O	AUG 2025

DRAWING REVISIONS

No.	Revision Details	Reviewed	Initials	Date	Approved
		By			
		Checked			
		By			
		Checked			
		By			
		Checked			
		By			
		Checked			
		By			
		Checked			

DRAWING TITLE:

FOOTBRIDGE FOUNDATION LAYOUT AND SETTING OUT DATA

DRAWING SCALE:

AS SHOWN

DRAWING NO:

TYP - FB1-005

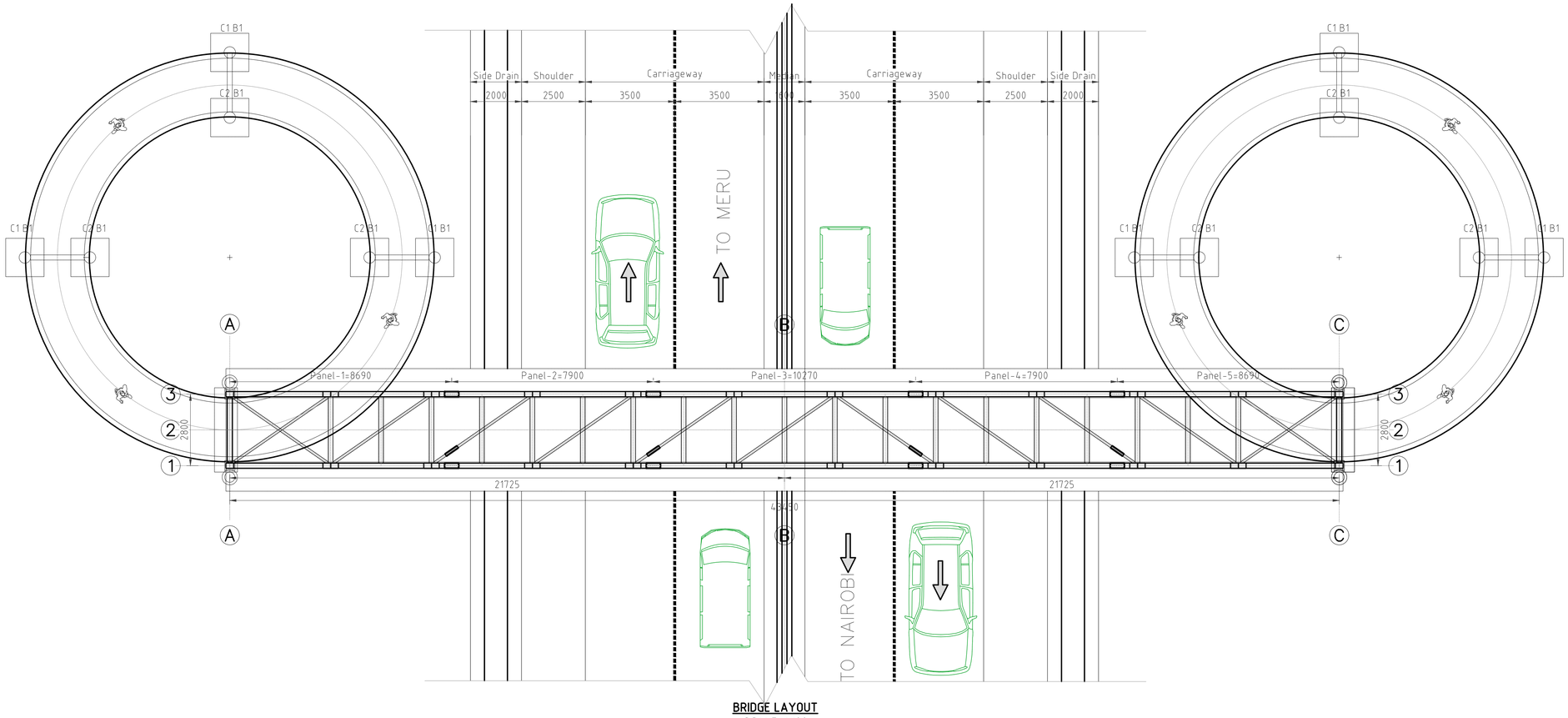

BRIDGE LAYOUT
SCALE: 1:100

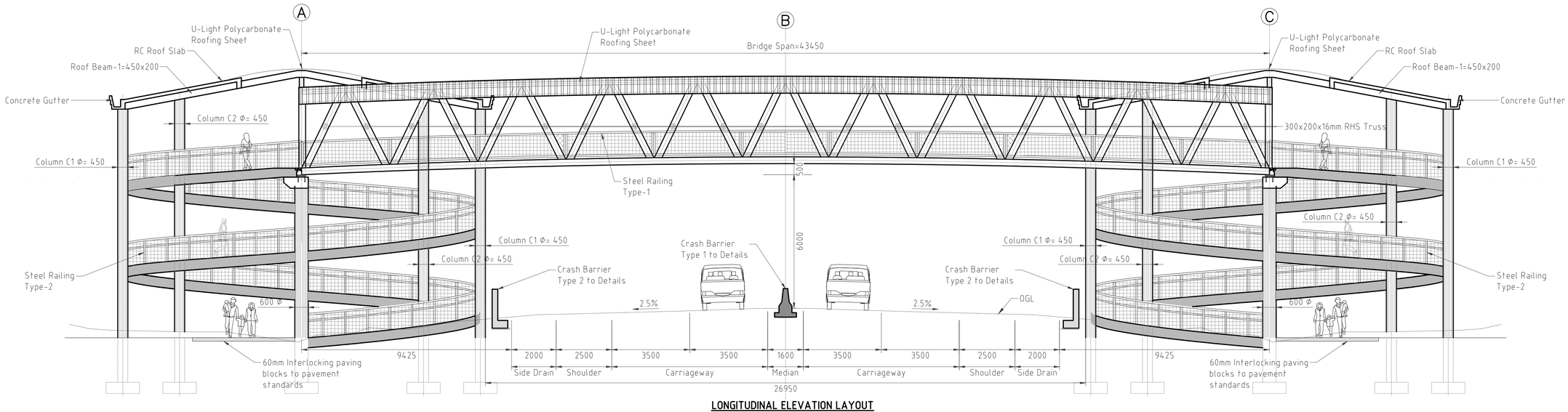

LONGITUDINAL ELEVATION LAYOUT
SCALE 1:100

CLIENT:

Kenya National Highways Authority
Quality Highways, Better Connections

KENYA NATIONAL HIGHWAY AUTHORITY
Barabara Plaza,
Off Airport South Road,
P. O. Box, 49712 - 00100,
NAIROBI.

KENYA URBAN ROADS AUTHORITY
KURA

KENYA URBAN ROADS AUTHORITY
Barabara Plaza,
Off Airport South Road,
P. O. Box, 49712 - 00100,
NAIROBI.

FINANCIER:

THE WORLD BANK

PROJECT:

HORN OF AFRICA GATEWAY DEVELOPMENT PROJECT (HOAGDP): -

Consultancy Services for the Design and Works Supervision for the Proposed Extension of Meru Bypass.

CONTRACT NO:

KeNHA/RD/CS/D/4205/2024

CONSULTANT:

egis

One Padmore Place 6th Floor,
George Padmore Road,
P. O. Box, 76672 - 00508,
NAIROBI.

DESIGN DETAILS

Action	Name	Date
Designed By:	I.O	AUG 2025
Drawn By:	W.O	AUG 2025
Checked By:	S.I	AUG 2025
Approved By:	S.O	AUG 2025

DRAWING REVISIONS

No.	Revision Details	Reviewed	Initials	Date	Approved
		By			
		Checked			
		By			
		Checked			
		By			
		Checked			
		By			
		Checked			
		By			
		Checked			

DRAWING TITLE:

FOOTBRIDGE LAYOUT PLAN AND LONGITUDINAL ELEVATION

DRAWING SCALE:

AS SHOWN

DRAWING NO:

TYP - FB1-006

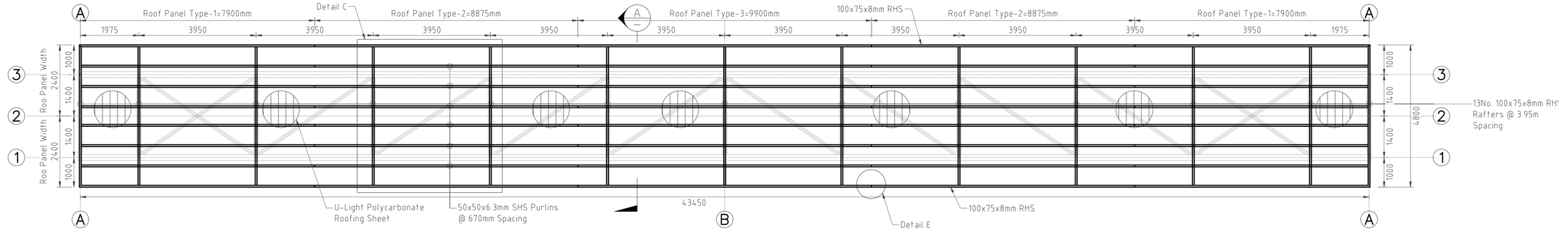

ROOF LAYOUT
SCALE: 1:75

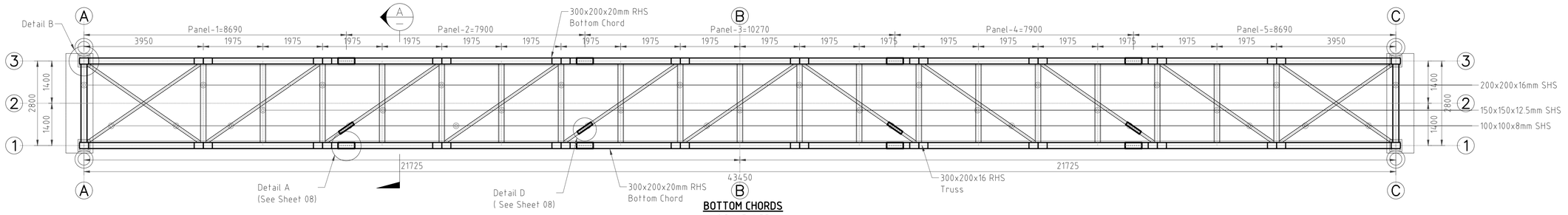

BOTTOM CHORDS
SCALE: 1:75

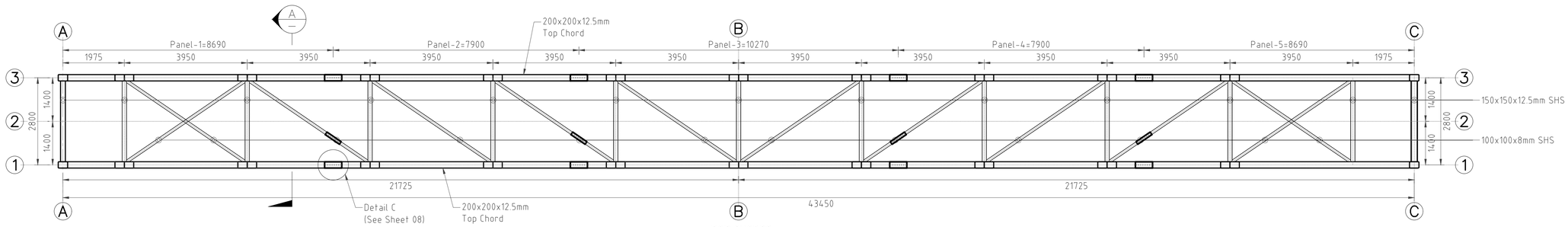

TOP CHORDS
SCALE: 1:75

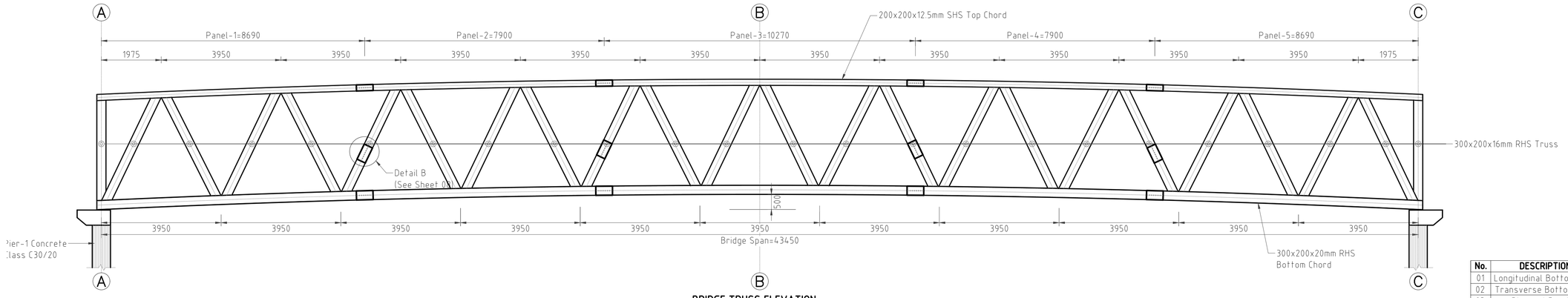

BRIDGE TRUSS ELEVATION
SCALE: 1:75

No.	DESCRIPTION	SIZE
01	Longitudinal Bottom Chord	300x200x20mm RHS
02	Transverse Bottom Chord	200x200x16mm SHS
03	Diagonal Bracings	100x100x8mm SHS
04	Longitudinal Top Chord	200x200x12.5mm SHS
05	Transverse Top Chord	150x150x12.5mm SHS
06	Truss	300x200x18mm RHS

CLIENT:
Kenya National Highways Authority — Quality Highways, Better Connections
KENYA NATIONAL HIGHWAY AUTHORITY
Barabara Plaza,
Off Airport South Road,
P. O. Box, 49712 - 00100,
NAIROBI.

KENYA URBAN ROADS AUTHORITY
Barabara Plaza,
Off Airport South Road,
P. O. Box, 49712 - 00100,
NAIROBI.

FINANCIER:
THE WORLD BANK

PROJECT:
HORN OF AFRICA GATEWAY DEVELOPMENT PROJECT (HOAGDP): -
Consultancy Services for the Design and Works Supervision for the Proposed Extension of Meru Bypass.

CONTRACT NO:
KeNHA/RD/CS/D/4205/2024

CONSULTANT:
egis
One Padmore Place 6th Floor,
George Padmore Road,
P. O. Box, 76672 - 00508,
NAIROBI.

DESIGN DETAILS

Action	Name	Date
Designed By:	I.O	AUG 2025
Drawn By:	W.O	AUG 2025
Checked By:	S.I	AUG 2025
Approved By:	S.O	AUG 2025

DRAWING REVISIONS

No.	Revision Details	Reviewed	Initials	Date	Approved
		By			
		Checked			
		By			
		Checked			
		By			
		Checked			
		By			
		Checked			
		By			
		Checked			

DRAWING TITLE:
DECK LAYOUT PLANS

DRAWING SCALE:
AS SHOWN

DRAWING NO:
TYP - FB1-007

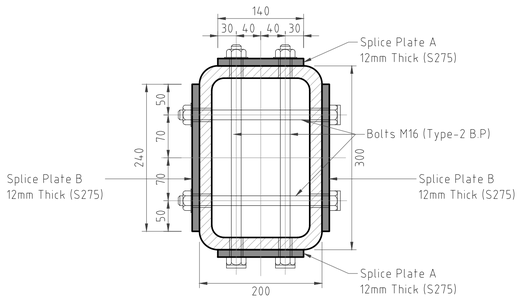

DETAIL A: BOLTED SPLICE CONNECTION-1

SCALE: 1:5

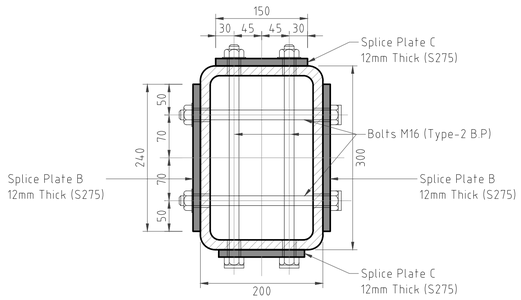

DETAIL B: BOLTED SPLICE CONNECTION-2

SCALE: 1:5

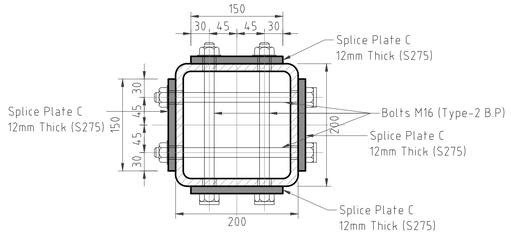

DETAIL C: BOLTED SPLICE CONNECTION-3

SCALE: 1:5

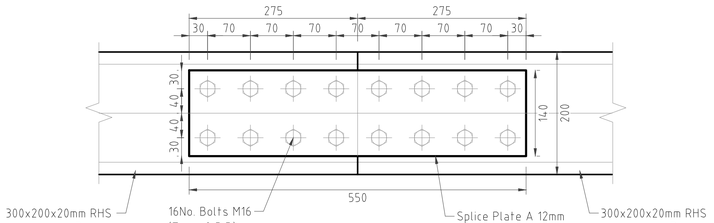

SPLICE PLATE A

SCALE: 1:5

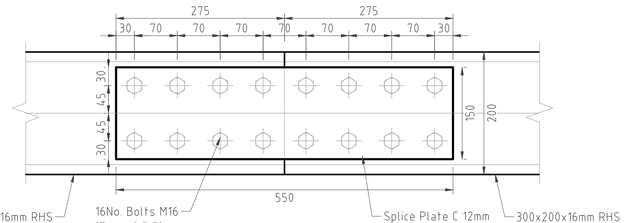

SPLICE PLATE C

SCALE: 1:5

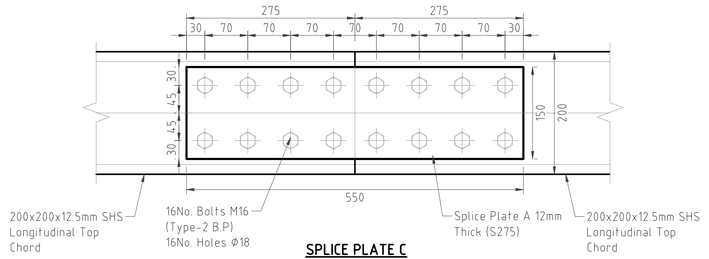

SPLICE PLATE C

SCALE: 1:5

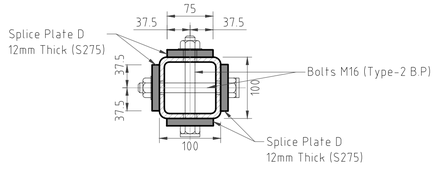

DETAIL D: BOLTED SPLICE CONNECTION-4

SCALE: 1:5

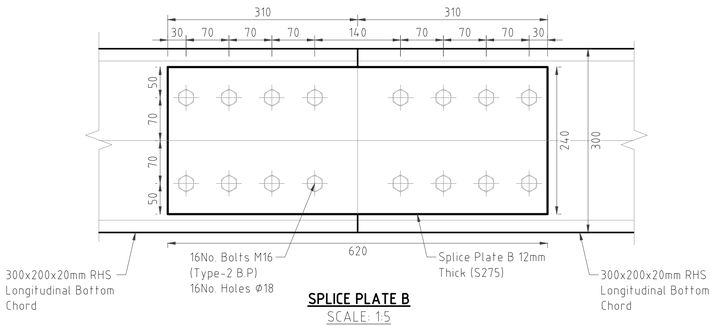

SPLICE PLATE B

SCALE: 1:5

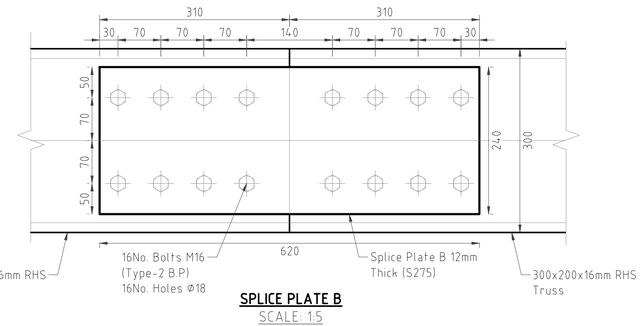

SPLICE PLATE B

SCALE: 1:5

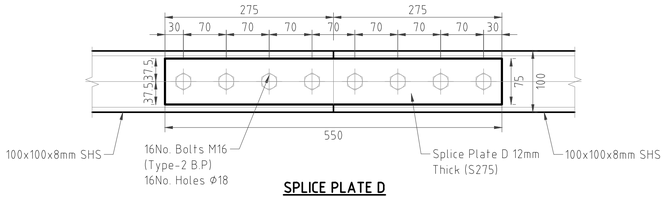

SPLICE PLATE D

SCALE: 1:5

BOLT ASSEMBLY- PRELOADED BOLTS
TYPE-2 P.B

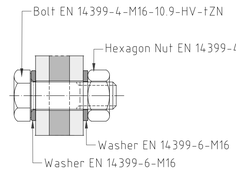

NOTE:

- Washers used under heads of preloaded bolts shall be chamfered according to EN 14399-6 and positioned with the chamfer towards the bolts heads.

CLIENT:

KENYA NATIONAL HIGHWAY AUTHORITY
Barabara Plaza,
Off Airport South Road,
P. O. Box, 49712 - 00100,
NAIROBI.

KENYA URBAN ROADS AUTHORITY
Barabara Plaza,
Off Airport South Road,
P. O. Box, 49712 - 00100,
NAIROBI.

FINANCIER:

THE WORLD BANK

PROJECT:

HORN OF AFRICA GATEWAY DEVELOPMENT PROJECT (HOAGDP): -

Consultancy Services for the Design and Works Supervision for the Proposed Extension of Meru Bypass.

CONTRACT NO:

KeNHA/RD/CS/D/4205/2024

CONSULTANT:

One Padmore Place 6th Floor,
George Padmore Road,
P. O. Box, 76672 - 00508,
NAIROBI.

DESIGN DETAILS

Action	Name	Date
Designed By:	I.O	AUG 2025
Drawn By:	W.O	AUG 2025
Checked By:	S.I	AUG 2025
Approved By:	S.O	AUG 2025

DRAWING REVISIONS

No.	Revision Details	Reviewed	Initials	Date	Approved
		By			
		Checked			
		By			
		Checked			
		By			
		Checked			
		By			
		Checked			
		By			
		Checked			

DRAWING TITLE:

BOLTED SPLICE CONNECTIONS

DRAWING SCALE:

AS SHOWN

DRAWING NO:

TYP - FB1-008

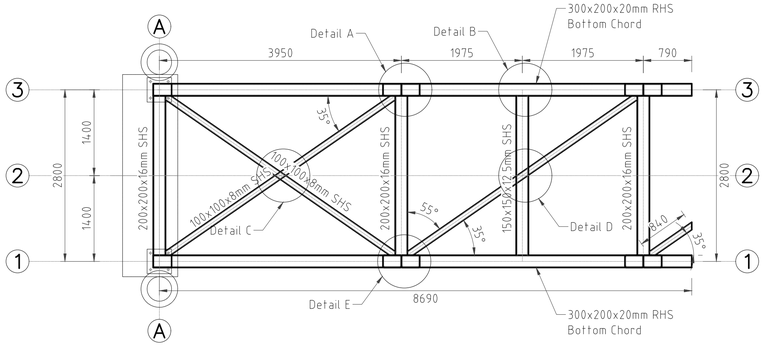

PANEL-1 BOTTOM CHORDS
SCALE: 1:50

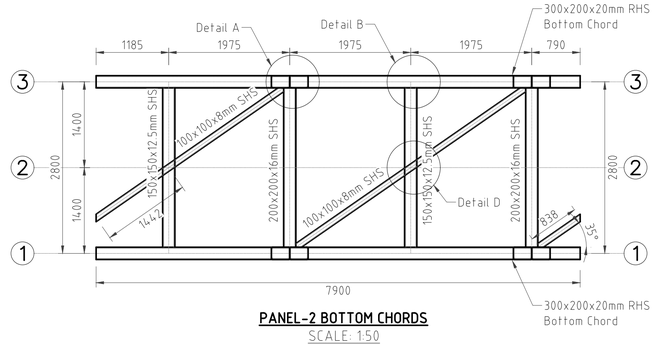

PANEL-2 BOTTOM CHORDS
SCALE: 1:50

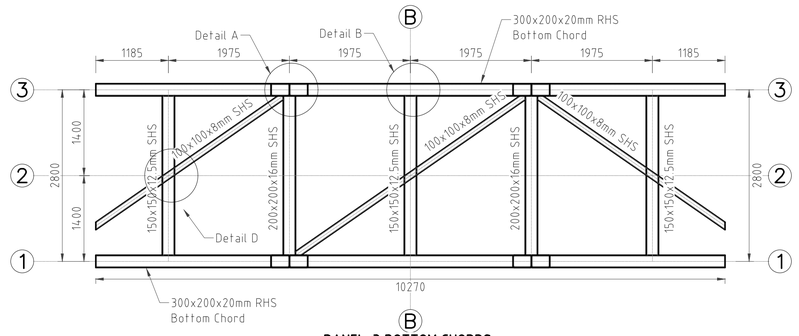

PANEL-3 BOTTOM CHORDS
SCALE: 1:50

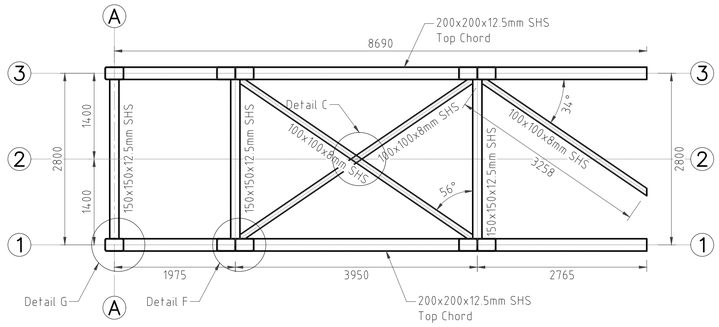

PANEL-1 TOP CHORDS
SCALE: 1:50

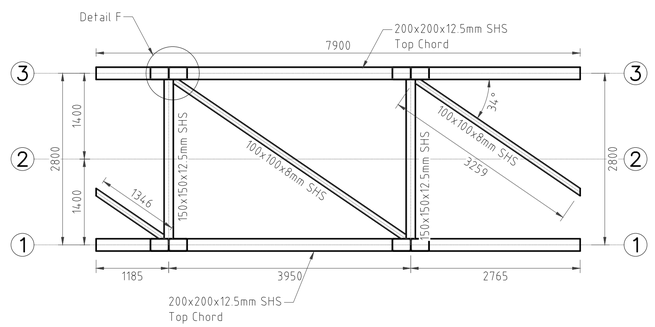

PANEL-2 TOP CHORDS
SCALE: 1:50

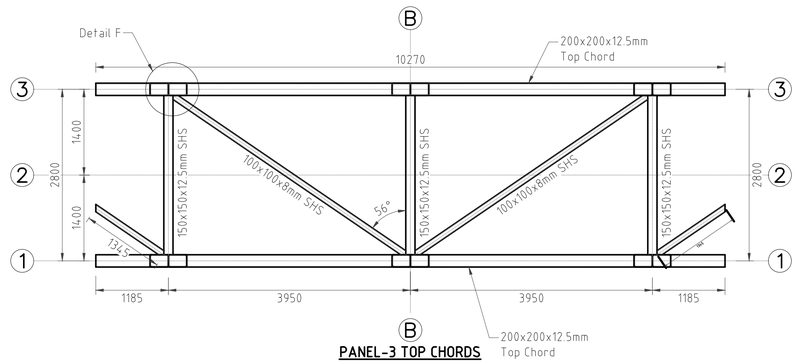

PANEL-3 TOP CHORDS
SCALE: 1:50

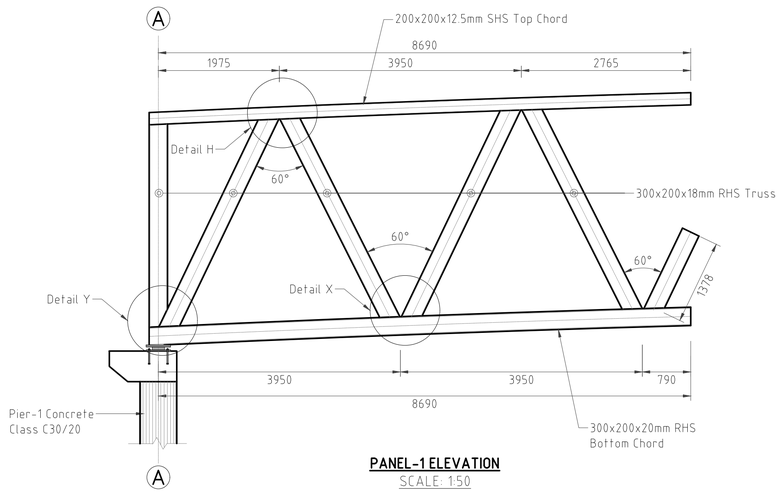

PANEL-1 ELEVATION
SCALE: 1:50

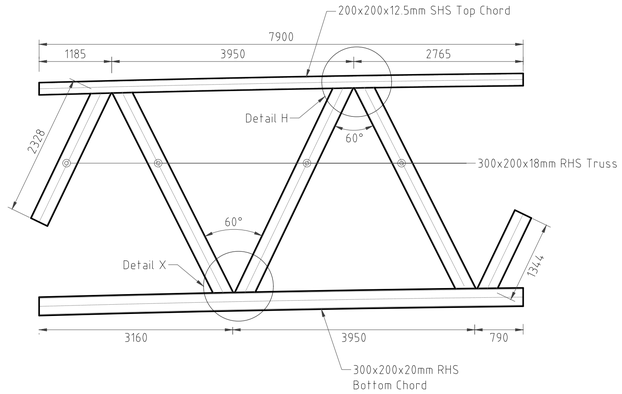

PANEL-2 ELEVATION
SCALE: 1:50

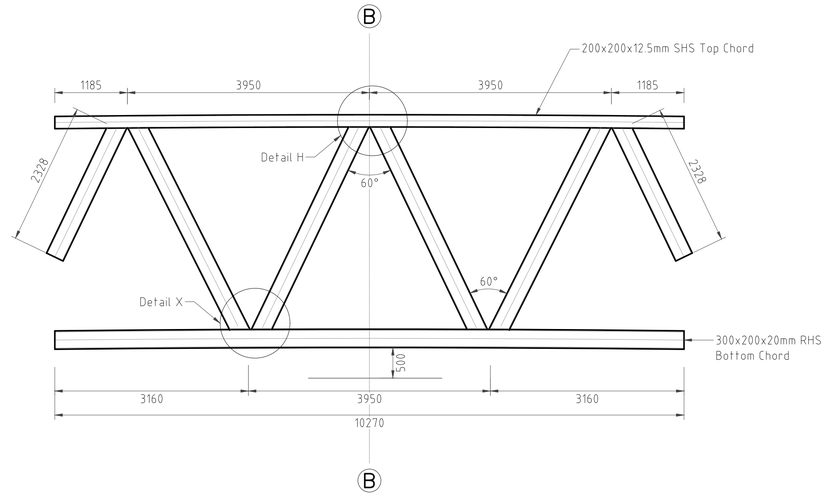

PANEL-3 ELEVATION
SCALE: 1:50

No.	DESCRIPTION	SIZE
01	Longitudinal Bottom Chord	300x200x20mm RHS
02	Transverse Bottom Chord	200x200x16mm SHS
03	Diagonal Bracings	100x100x8mm SHS
04	Longitudinal Top Chord	200x200x12.5mm SHS
05	Transverse Top Chord	150x150x12.5mm SHS
06	Truss	300x200x18mm RHS

CLIENT:

Kenya National Highways Authority
Quality Highways, Better Connections

KENYA NATIONAL HIGHWAY AUTHORITY
Barabara Plaza,
Off Airport South Road,
P. O. Box, 49712 - 00100,
NAIROBI.

KENYA URBAN ROADS AUTHORITY
Barabara Plaza,
Off Airport South Road,
P. O. Box, 49712 - 00100,
NAIROBI.

FINANCIER:

THE WORLD BANK

PROJECT:

HORN OF AFRICA GATEWAY DEVELOPMENT PROJECT (HOAGDP): -

Consultancy Services for the Design and Works Supervision for the Proposed Extension of Meru Bypass.

CONTRACT NO:

KeNHA/RD/CS/D/4205/2024

CONSULTANT:

egis

One Padmore Place 6th Floor,
George Padmore Road,
P. O. Box, 76672 - 00508,
NAIROBI.

DESIGN DETAILS

Action	Name	Date
Designed By:	I.O	AUG 2025
Drawn By:	W.O	AUG 2025
Checked By:	S.I	AUG 2025
Approved By:	S.O	AUG 2025

DRAWING REVISIONS

No.	Revision Details	Reviewed	Initials	Date	Approved
		By			
		Checked			
		By			
		Checked			
		By			
		Checked			
		By			
		Checked			
		By			
		Checked			

DRAWING TITLE:

DECK PANEL-1, PANEL-2 AND PANEL-3 DETAILS

DRAWING SCALE:

AS SHOWN

DRAWING NO:

TYP - FB1-009

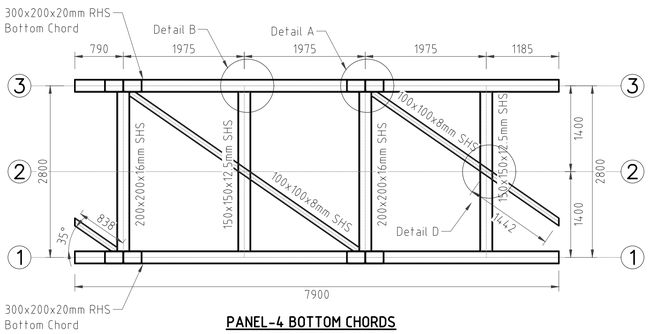

PANEL-4 BOTTOM CHORDS
SCALE: 1:50

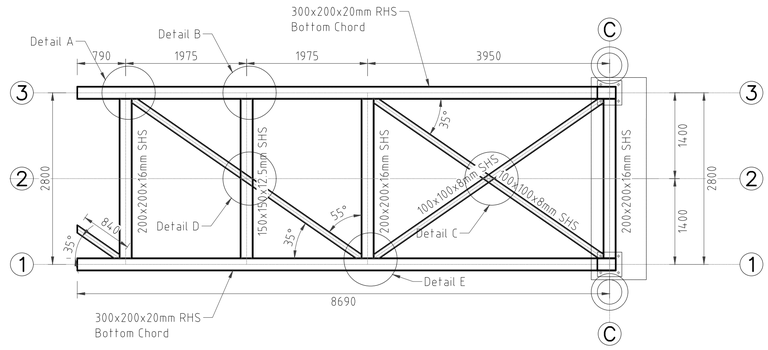

PANEL-5 BOTTOM CHORDS
SCALE: 1:50

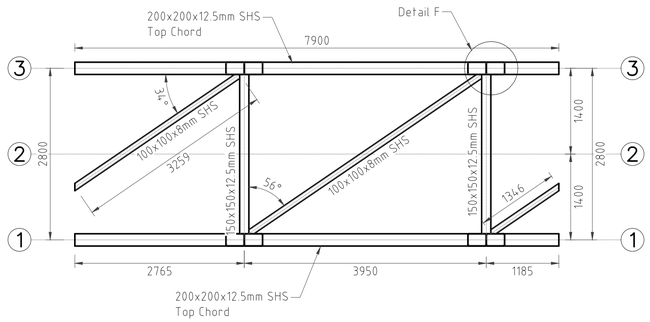

PANEL-4 TOP CHORDS
SCALE: 1:50

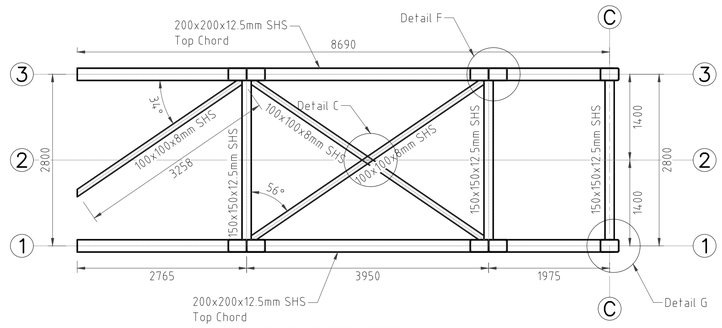

PANEL-5 TOP CHORDS
SCALE: 1:50

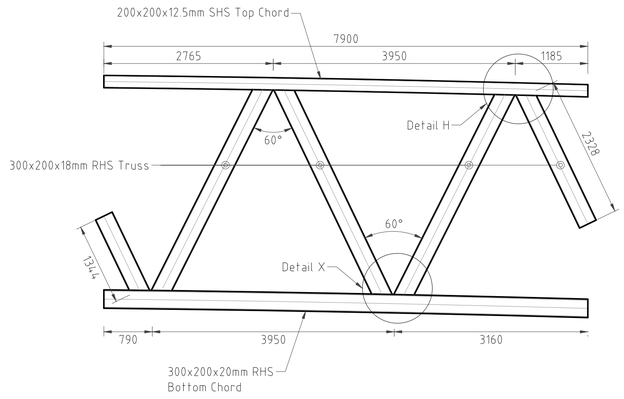

PANEL-4 ELEVATION
SCALE: 1:50

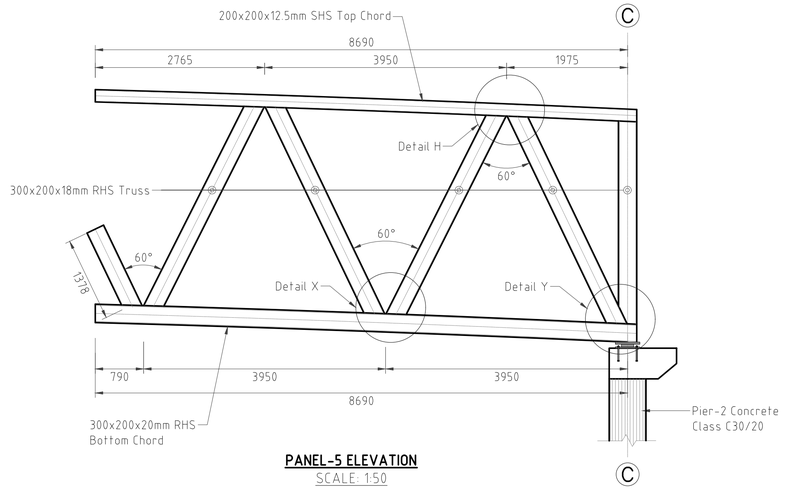

PANEL-5 ELEVATION
SCALE: 1:50

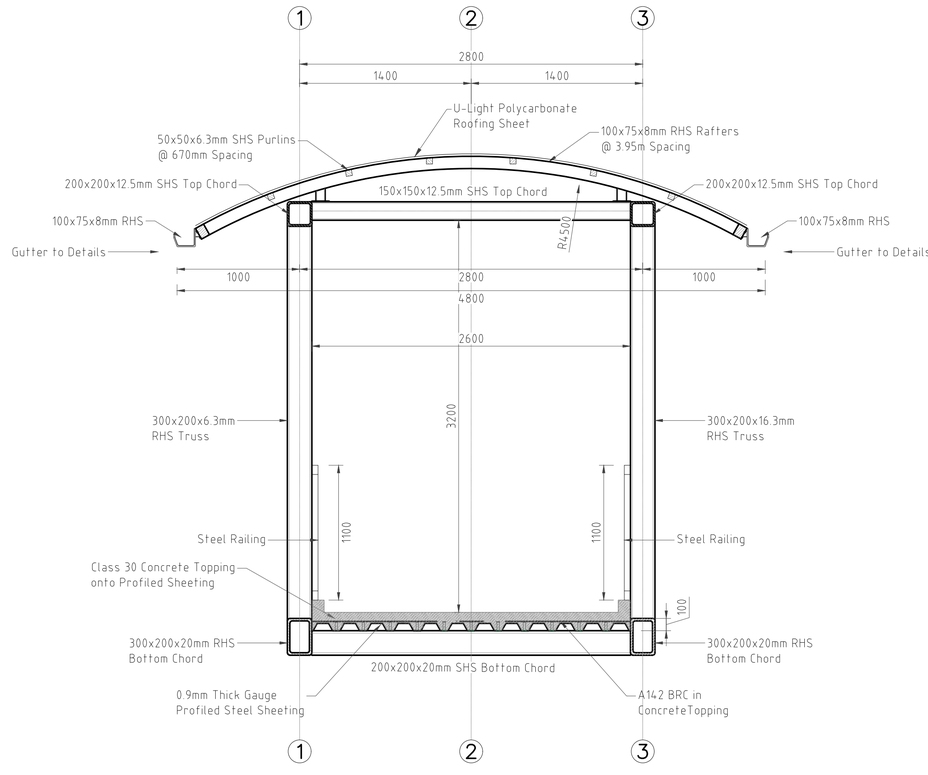

BRIDGE DECK CROSS-SECTION
SCALE: 1:25

No.	DESCRIPTION	SIZE
01	Longitudinal Bottom Chord	300x200x20mm RHS
02	Transverse Bottom Chord	200x200x16mm SHS
03	Diagonal Bracings	100x100x8mm SHS
04	Longitudinal Top Chord	200x200x12.5mm SHS
05	Transverse Top Chord	150x150x12.5mm SHS
06	Truss	300x200x18mm RHS

CLIENT:

KENYA NATIONAL HIGHWAY AUTHORITY
Barabara Plaza,
Off Airport South Road,
P. O. Box, 49712 - 00100,
NAIROBI.

KENYA URBAN ROADS AUTHORITY
Barabara Plaza,
Off Airport South Road,
P. O. Box, 49712 - 00100,
NAIROBI.

FINANCIER:

THE WORLD BANK

PROJECT:

HORN OF AFRICA GATEWAY DEVELOPMENT PROJECT (HOAGDP): -

Consultancy Services for the Design and Works Supervision for the Proposed Extension of Meru Bypass.

CONTRACT NO:

KeNHA/RD/CS/D/4205/2024

CONSULTANT:

egis

One Padmore Place 6th Floor,
George Padmore Road,
P. O. Box, 76672 - 00508,
NAIROBI.

DESIGN DETAILS

Action	Name	Date
Designed By:	I.O	AUG 2025
Drawn By:	W.O	AUG 2025
Checked By:	S.I	AUG 2025
Approved By:	S.O	AUG 2025

DRAWING REVISIONS

No.	Revision Details	Reviewed	Initials	Date	Approved
		By			
		Checked			
		By			
		Checked			
		By			
		Checked			
		By			
		Checked			
		By			
		Checked			

DRAWING TITLE:

DECK CROSS-SECTION AND PANEL-4 & PANEL-5 DETAILS

DRAWING SCALE:

AS SHOWN

DRAWING NO:

TYP - FB1-010

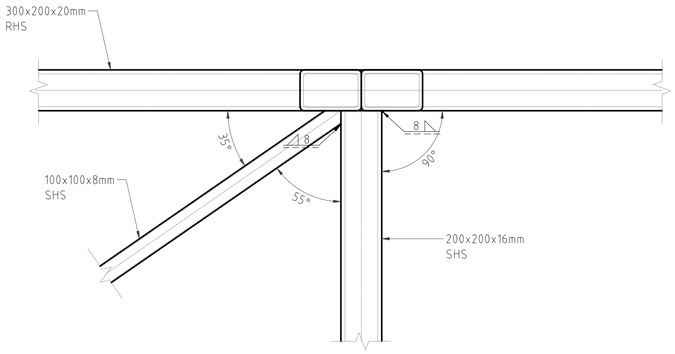

DETAIL A
SCALE: 1:15

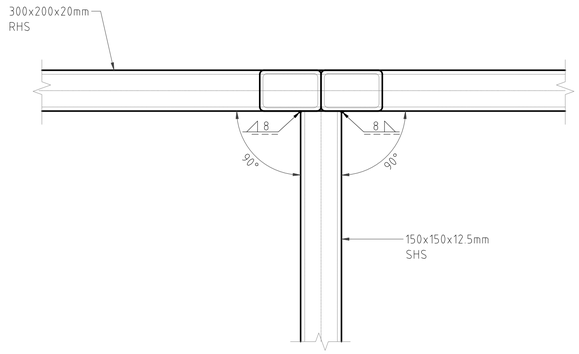

DETAIL B
SCALE: 1:15

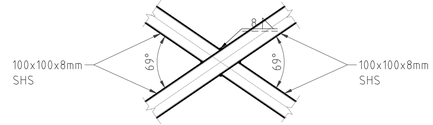

DETAIL C
SCALE: 1:15

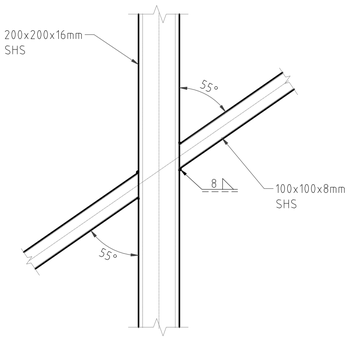

DETAIL D
SCALE: 1:15

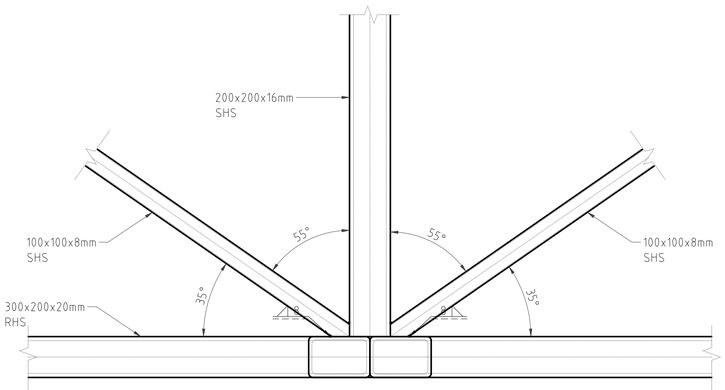

DETAIL E
SCALE: 1:15

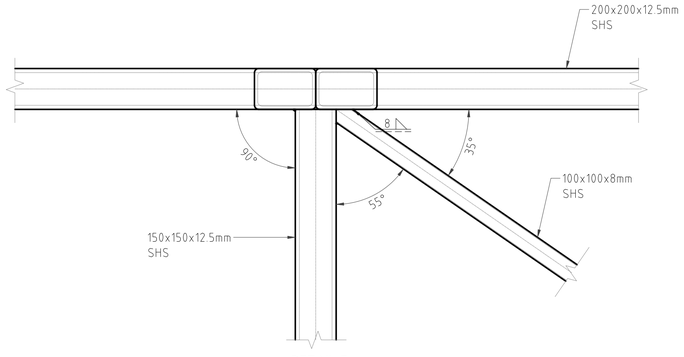

DETAIL F
SCALE: 1:15

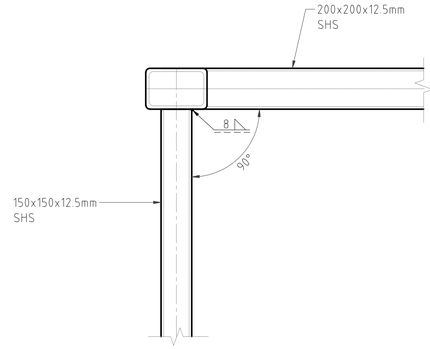

DETAIL G
SCALE: 1:15

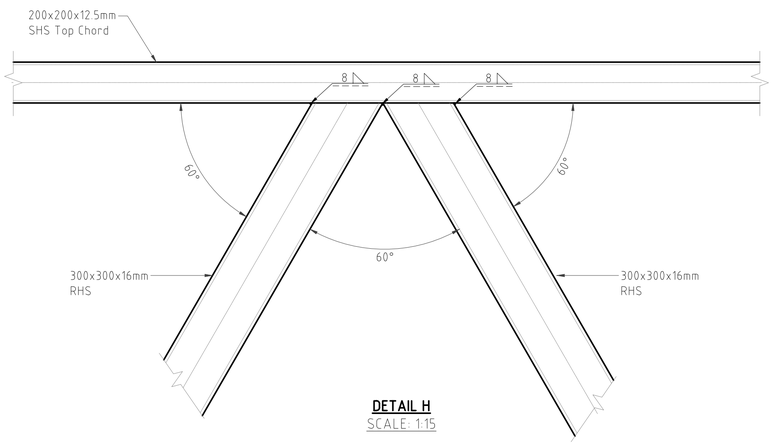

DETAIL H
SCALE: 1:15

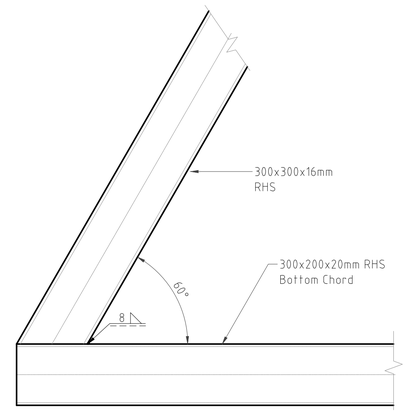

DETAIL X
SCALE: 1:15

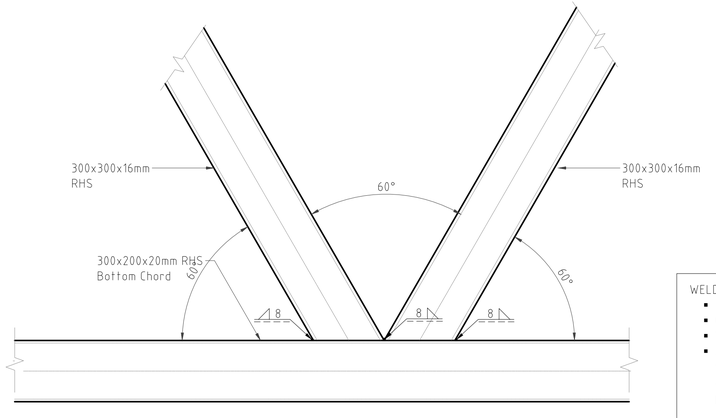

DETAIL Y
SCALE: 1:15

No.	DESCRIPTION	SIZE
01	Longitudinal Bottom Chord	300x200x20mm RHS
02	Transverse Bottom Chord	200x200x16mm SHS
03	Diagonal Bracings	100x100x8mm SHS
04	Longitudinal Top Chord	200x200x12.5mm SHS
05	Transverse Top Chord	150x150x12.5mm SHS
06	Truss	300x200x18mm RHS

WELDING:

- Symbolic representation on drawing according to BS-EN 22553
- Quality requirement for welding UNE-EN ISO 5817 Quality Level B.
- Welding general tolerance BS-EN ISO 13920.
- All welded joints shall be factory welded in a controlled environment, and welds will be applied by skilled welders using specialist equipment to achieve highest possible standards, as specified in relevant code of practice. No welding of structural connections will be carried out on site, unless special exception for a specific part/spot on a structural component is requested and approval granted by the Engineer.

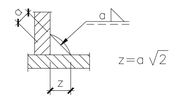

CLIENT:

KENYA NATIONAL HIGHWAY AUTHORITY
Barabara Plaza,
Off Airport South Road,
P. O. Box, 49712 - 00100,
NAIROBI.

KENYA URBAN ROADS AUTHORITY
Barabara Plaza,
Off Airport South Road,
P. O. Box, 49712 - 00100,
NAIROBI.

FINANCIER:

THE WORLD BANK

PROJECT:

HORN OF AFRICA GATEWAY DEVELOPMENT PROJECT (HOAGDP): -

Consultancy Services for the Design and Works Supervision for the Proposed Extension of Meru Bypass.

CONTRACT NO:

KeNHA/RD/CS/D/4205/2024

CONSULTANT:

egis

One Padmore Place 6th Floor,
George Padmore Road,
P. O. Box, 76672 - 00508,
NAIROBI.

DESIGN DETAILS

Action	Name	Date
Designed By:	I.O	AUG 2025
Drawn By:	W.O	AUG 2025
Checked By:	S.I	AUG 2025
Approved By:	S.O	AUG 2025

DRAWING REVISIONS

No.	Revision Details	Reviewed	Initials	Date	Approved
		By			
		Checked			
		By			
		Checked			
		By			
		Checked			
		By			
		Checked			
		By			
		Checked			

DRAWING TITLE:

DECK PANELS CONNECTION DETAILS

DRAWING SCALE:

AS SHOWN

DRAWING NO:

TYP - FB1-011

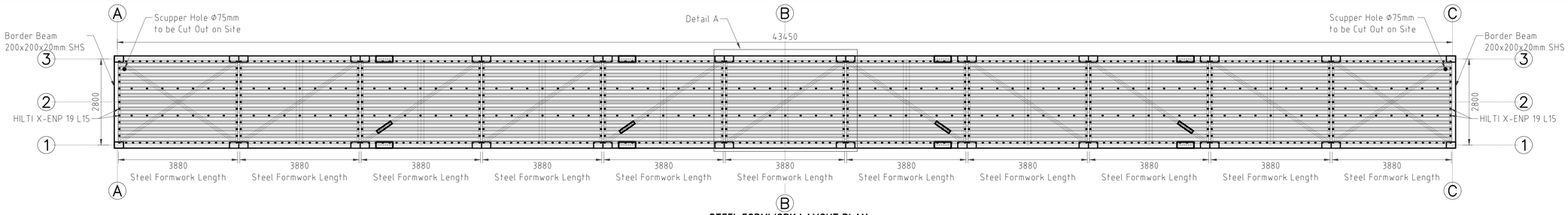

STEEL FORMWORK LAYOUT PLAN
SCALE: 1:75

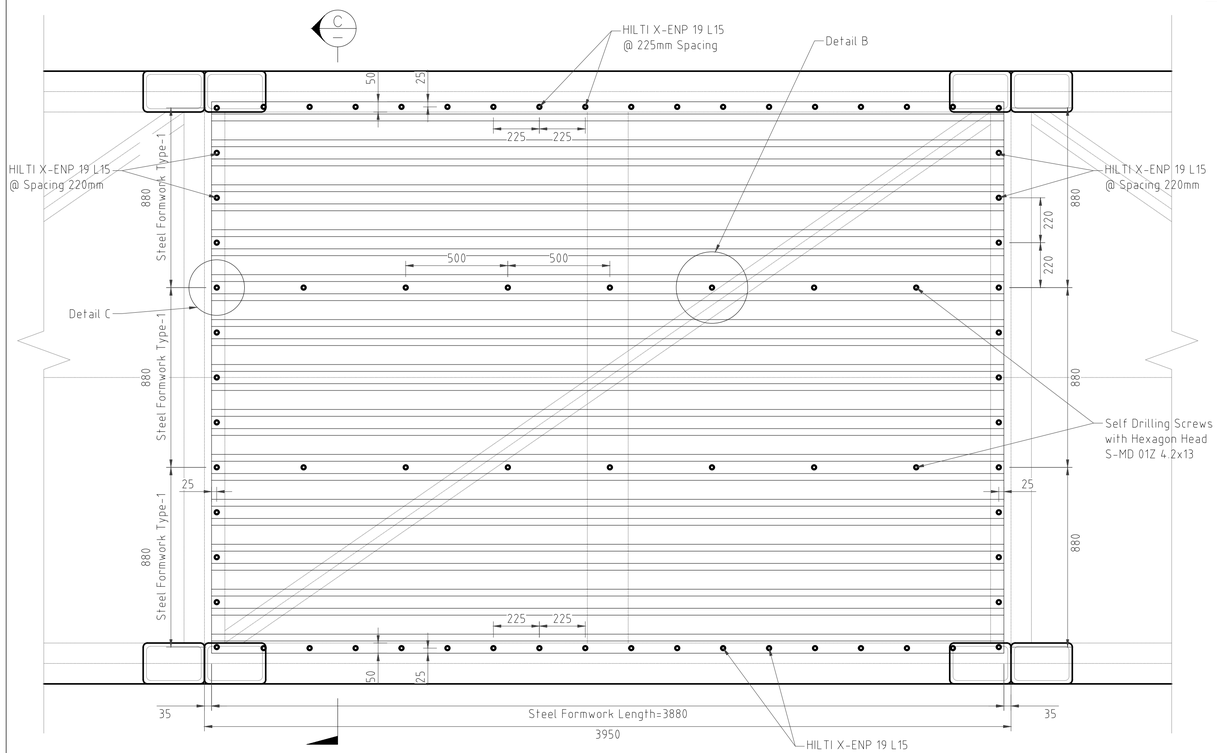

DETAIL A
SCALE: 1:15

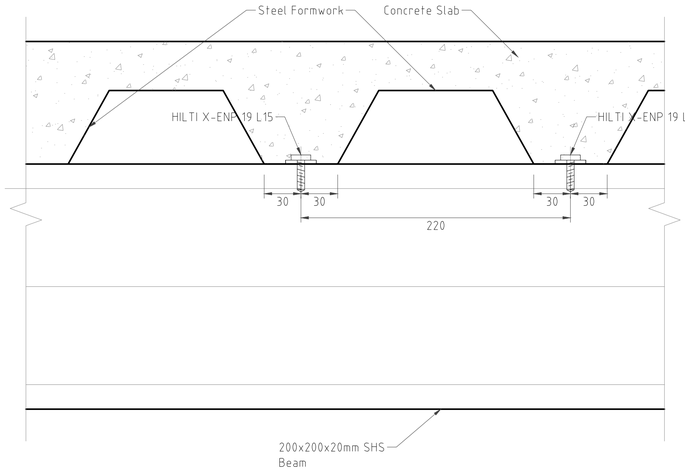

DETAIL C
SCALE: 1:2.5

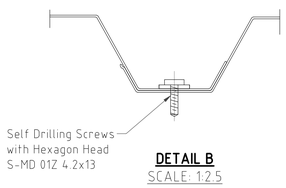

DETAIL B
SCALE: 1:2.5

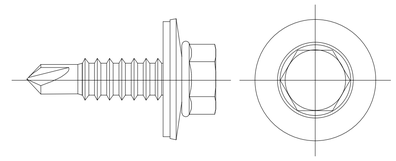

HILTI S-MD 53Z 5.5x25

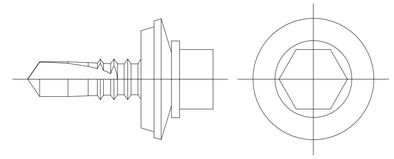

HILTI S-MD 53Z 5.5x19

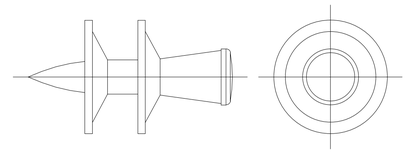

HILTI X-ENP-19 L15 MX

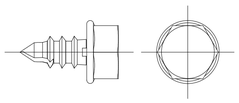

HILTI S-MD 01Z 4.2x13

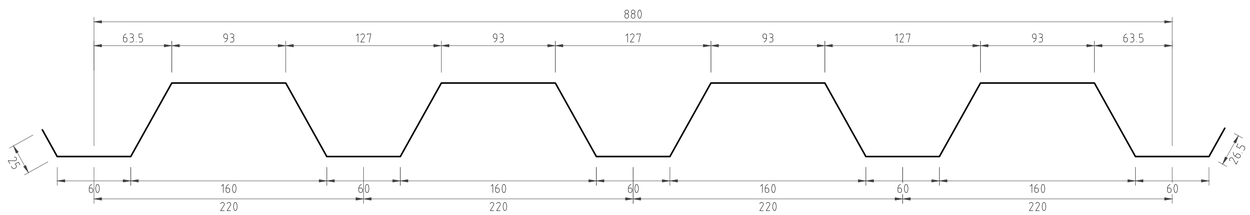

STEEL FORMWORK TYPE-1
SCALE: 1:2.5

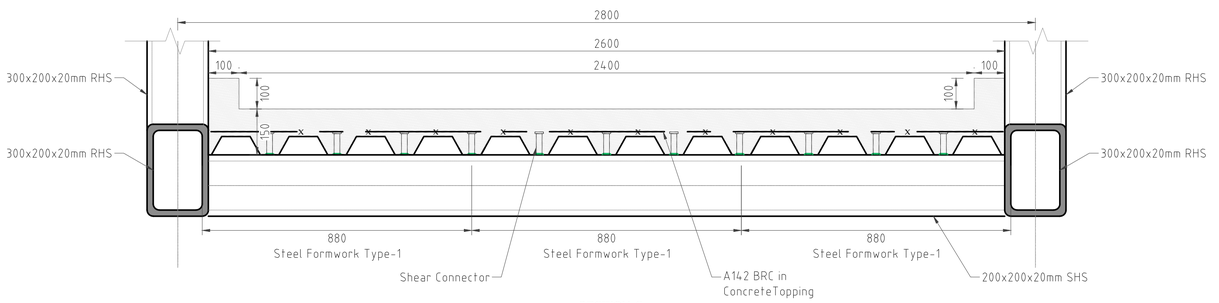

SECTION C
SCALE: 1:10

CLIENT:

KENYA NATIONAL HIGHWAY AUTHORITY
Barabara Plaza,
Off Airport South Road,
P. O. Box, 49712 - 00100,
NAIROBI.

KENYA URBAN ROADS AUTHORITY
Barabara Plaza,
Off Airport South Road,
P. O. Box, 49712 - 00100,
NAIROBI.

FINANCIER:

THE WORLD BANK

PROJECT:

HORN OF AFRICA GATEWAY DEVELOPMENT PROJECT (HOAGDP): -

Consultancy Services for the Design and Works Supervision for the Proposed Extension of Meru Bypass.

CONTRACT NO:

KeNHA/RD/CS/D/4205/2024

CONSULTANT:

One Padmore Place 6th Floor,
George Padmore Road,
P. O. Box, 76672 - 00508,
NAIROBI.

DESIGN DETAILS

Action	Name	Date
Designed By:	I.O	AUG 2025
Drawn By:	W.O	AUG 2025
Checked By:	S.I	AUG 2025
Approved By:	S.O	AUG 2025

DRAWING REVISIONS

No.	Revision Details		Reviewed	Initials	Date	Approved
		By				
		Checked				
		By				
		Checked				
		By				
		Checked				
		By				
		Checked				
		By				
		Checked				

DRAWING TITLE:

DECK SLAB DETAILS

DRAWING SCALE:

AS SHOWN

DRAWING NO:

TYP - FB1-012

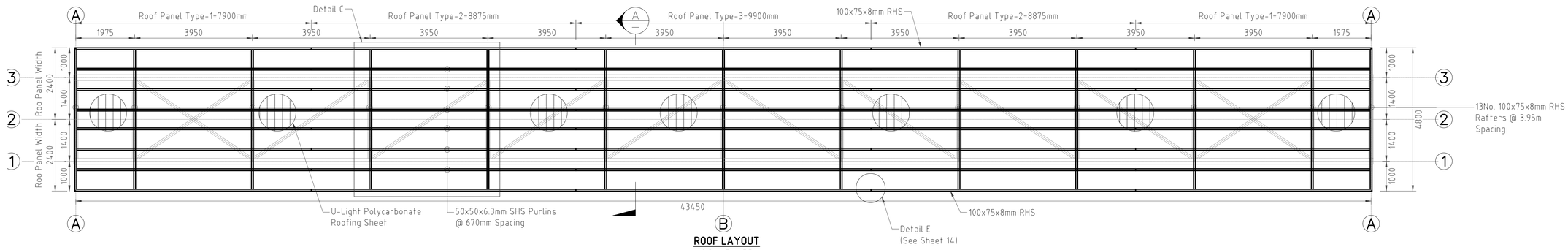

ROOF LAYOUT
SCALE: 1:75

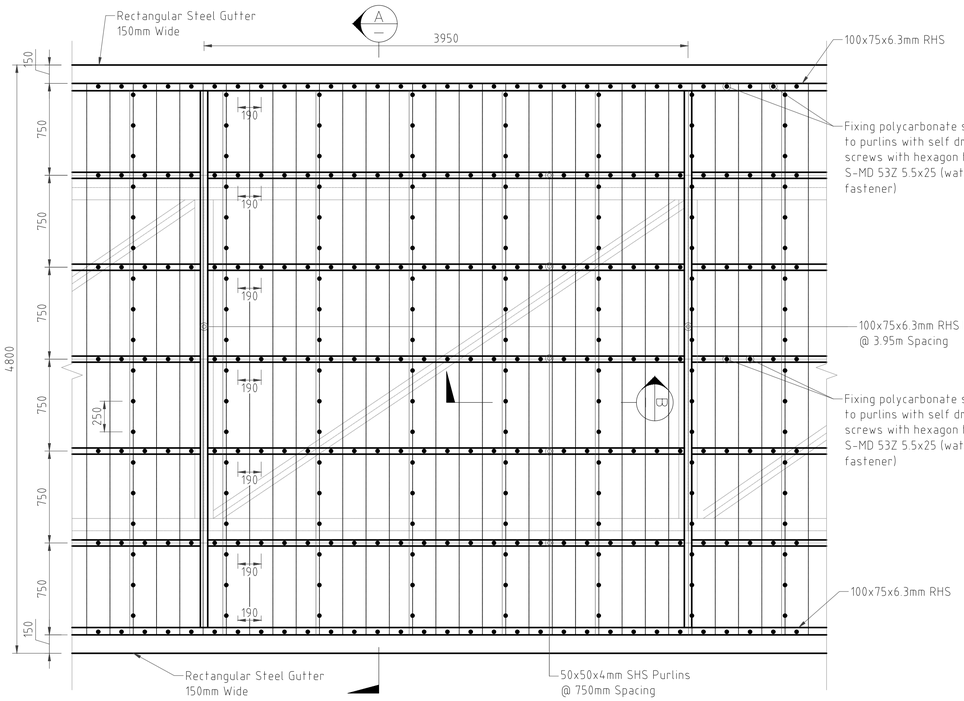

DETAIL C
SCALE: 1:25

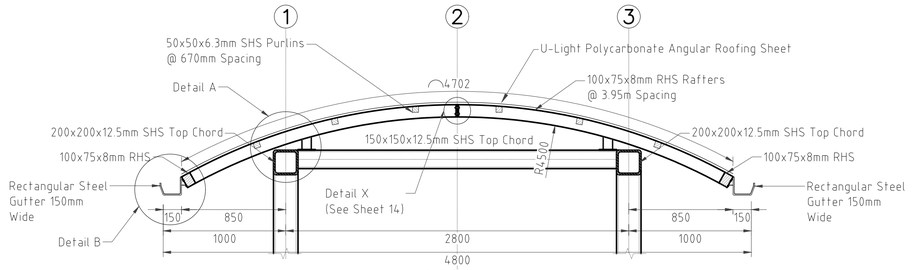

SECTION A-A
SCALE: 1:25

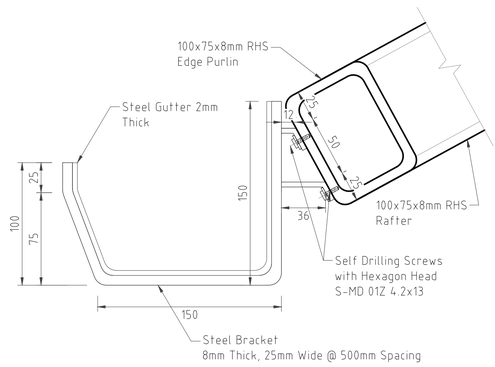

DETAIL B: STEEL GUTTER
SCALE: 1:2.5

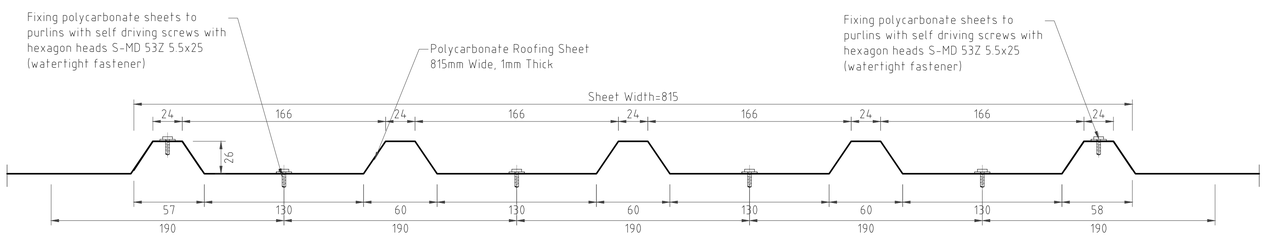

SECTION B-B
POLYCARBONATE ROOFING SHEET
SCALE: 1:2.5

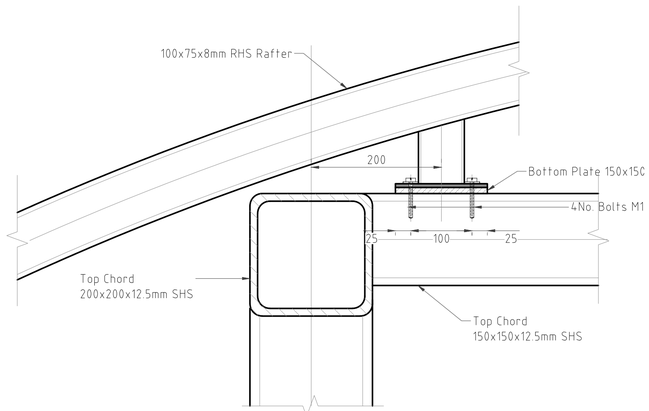

DETAIL A
SCALE: 1:5

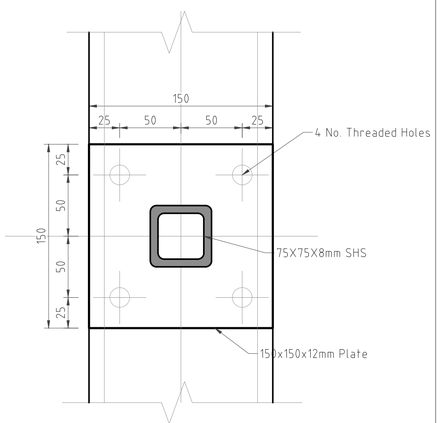

BOTTOM PLATE PLAN
SCALE: 1:2.5

CLIENT:

KENYA NATIONAL HIGHWAY AUTHORITY
Barabara Plaza,
Off Airport South Road,
P. O. Box, 49712 - 00100,
NAIROBI.

KENYA URBAN ROADS AUTHORITY
Barabara Plaza,
Off Airport South Road,
P. O. Box, 49712 - 00100,
NAIROBI.

FINANCIER:

THE WORLD BANK

PROJECT:

HORN OF AFRICA GATEWAY DEVELOPMENT PROJECT (HOAGDP): -

Consultancy Services for the Design and Works Supervision for the Proposed Extension of Meru Bypass.

CONTRACT NO:

KeNHA/RD/CS/D/4205/2024

CONSULTANT:

One Padmore Place 6th Floor,
George Padmore Road,
P. O. Box, 76672 - 00508,
NAIROBI.

DESIGN DETAILS

Action	Name	Date
Designed By:	LO	AUG 2025
Drawn By:	W.O	AUG 2025
Checked By:	S.I	AUG 2025
Approved By:	S.O	AUG 2025

DRAWING REVISIONS

No.	Revision Details	Reviewed	Initials	Date	Approved
		By			
		Checked			
		By			
		Checked			
		By			
		Checked			
		By			
		Checked			
		By			
		Checked			

DRAWING TITLE:

DECK ROOF DETAILS

DRAWING SCALE:

AS SHOWN

DRAWING NO:

TYP - FB1-013

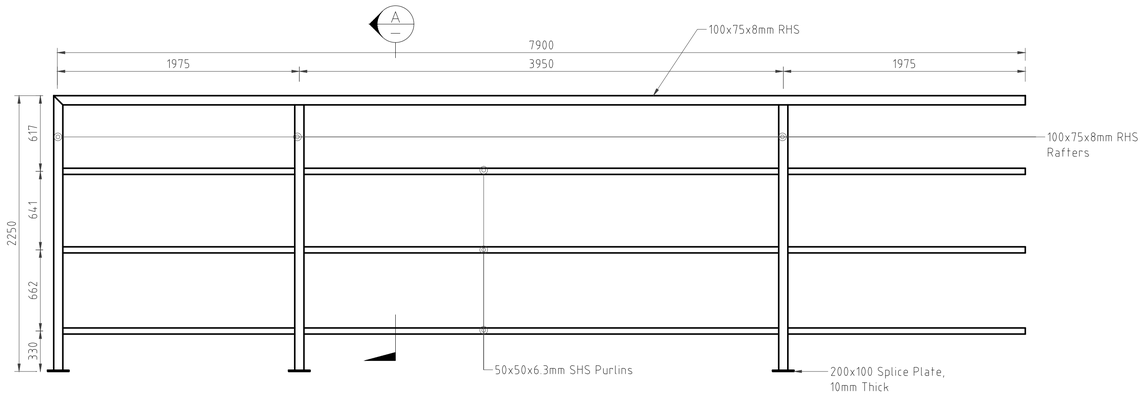

ROOF PANEL TYPE-1 (4 No.)
SCALE: 1:25

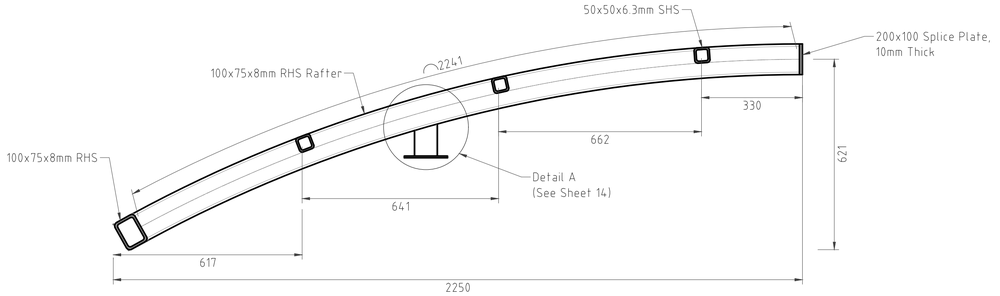

SECTION A-A:
SCALE: 1:10

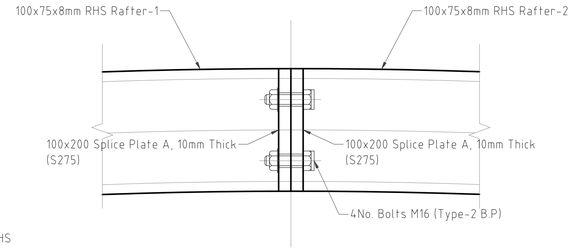

DETAIL X: RAFTER BOLTED SPLICE CONNECTION
SCALE: 1:2.5

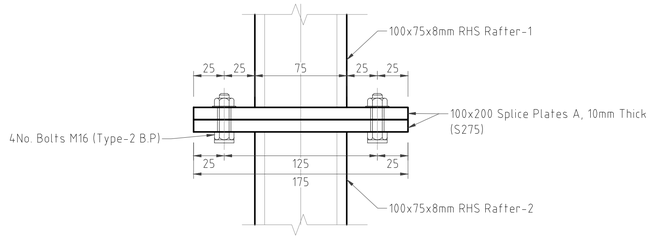

SECTION B-B
SCALE: 1:2.5

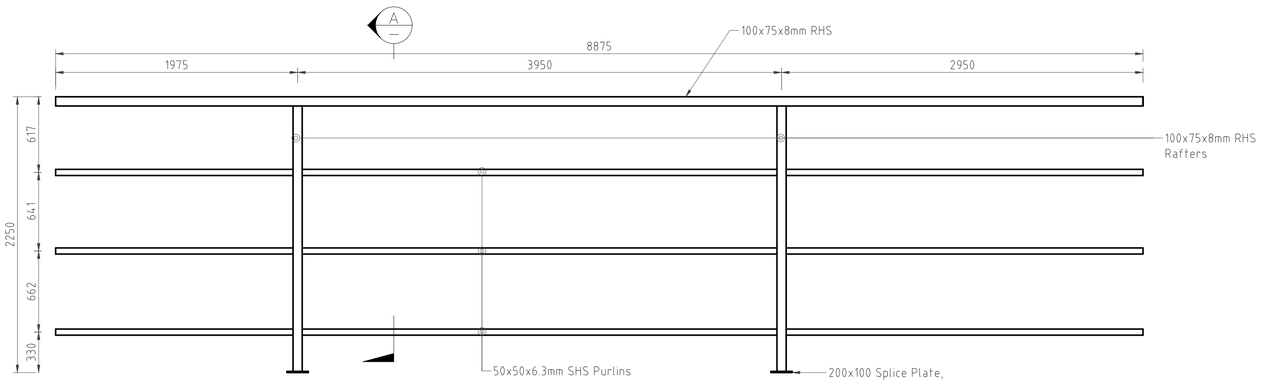

ROOF PANEL TYPE-2 (4 No.)
SCALE: 1:25

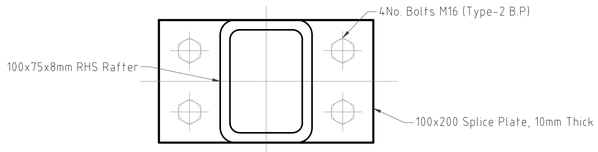

SPLICE PLATE A
SCALE: 1:2.5

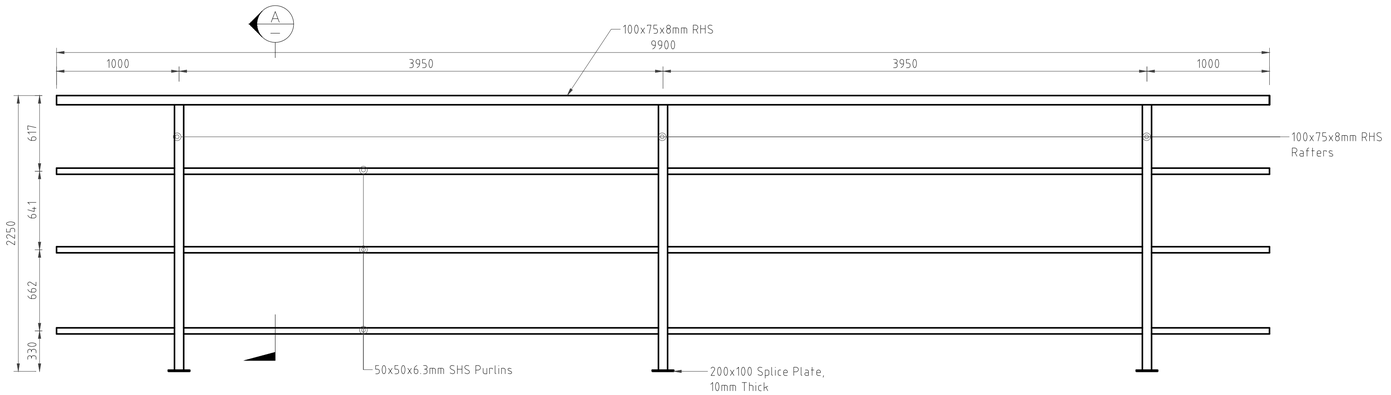

ROOF PANEL TYPE-3 (2 No.)
SCALE: 1:25

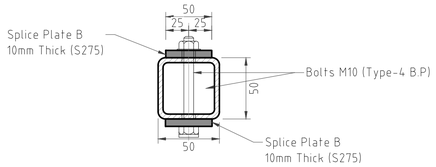

DETAIL E: PURLINS BOLTED CONNECTION
SCALE: 1:5

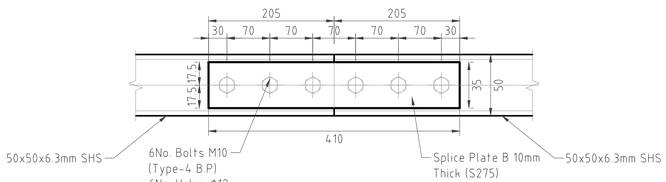

SPLICE PLATE B
SCALE: 1:5

CLIENT:
KENYA NATIONAL HIGHWAY AUTHORITY
Barabara Plaza,
Off Airport South Road,
P. O. Box, 49712 - 00100,
NAIROBI.

KENYA URBAN ROADS AUTHORITY
Barabara Plaza,
Off Airport South Road,
P. O. Box, 49712 - 00100,
NAIROBI.

FINANCIER:
THE WORLD BANK

PROJECT:
HORN OF AFRICA GATEWAY DEVELOPMENT PROJECT (HOAGDP): -

Consultancy Services for the Design and Works Supervision for the Proposed Extension of Meru Bypass.

CONTRACT NO:
KeNHA/RD/CS/D/4205/2024

CONSULTANT:
One Padmore Place 6th Floor,
George Padmore Road,
P. O. Box, 76672 - 00508,
NAIROBI.

DESIGN DETAILS

Action	Name	Date
Designed By:	LO	AUG 2025
Drawn By:	W.O	AUG 2025
Checked By:	S.I	AUG 2025
Approved By:	S.O	AUG 2025

DRAWING REVISIONS

No.	Revision Details	Reviewed	Initials	Date	Approved
		By			
		Checked			
		By			
		Checked			
		By			
		Checked			
		By			
		Checked			
		By			
		Checked			

DRAWING TITLE:
DECK ROOF PANELS DETAILS

DRAWING SCALE:
AS SHOWN

DRAWING NO:
TYP - FB1-014

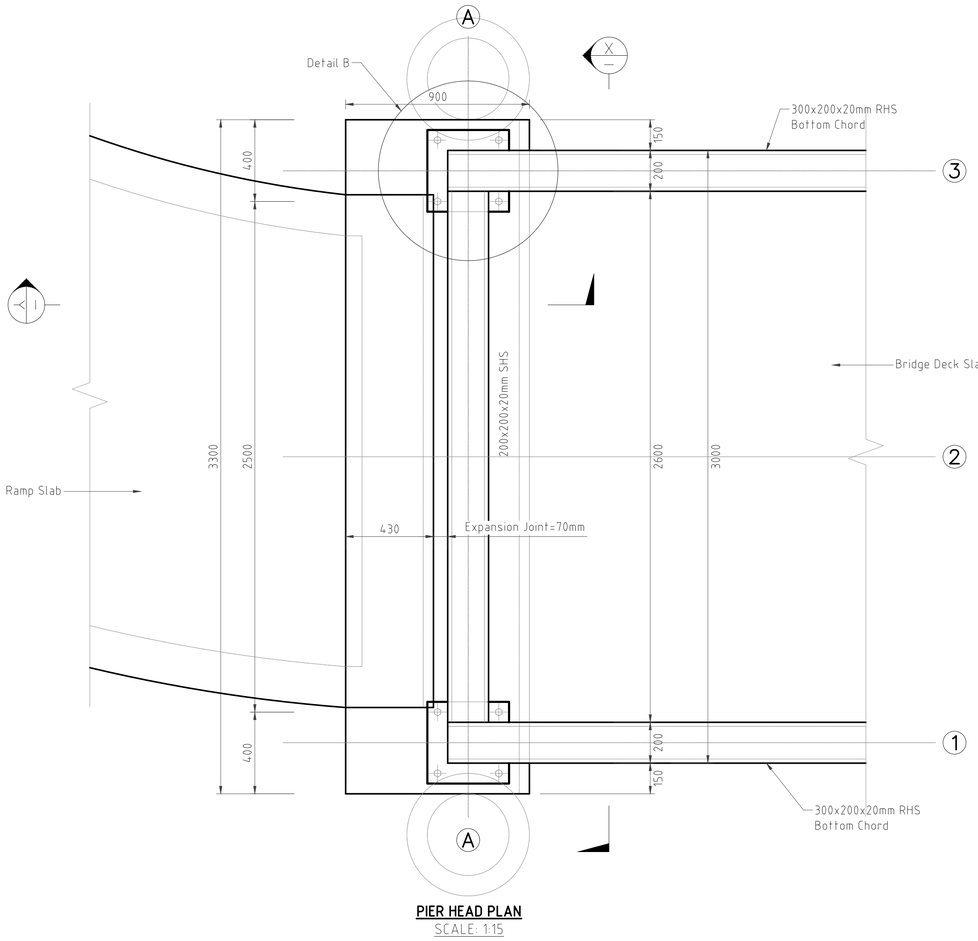

PIER HEAD PLAN
SCALE: 1:15

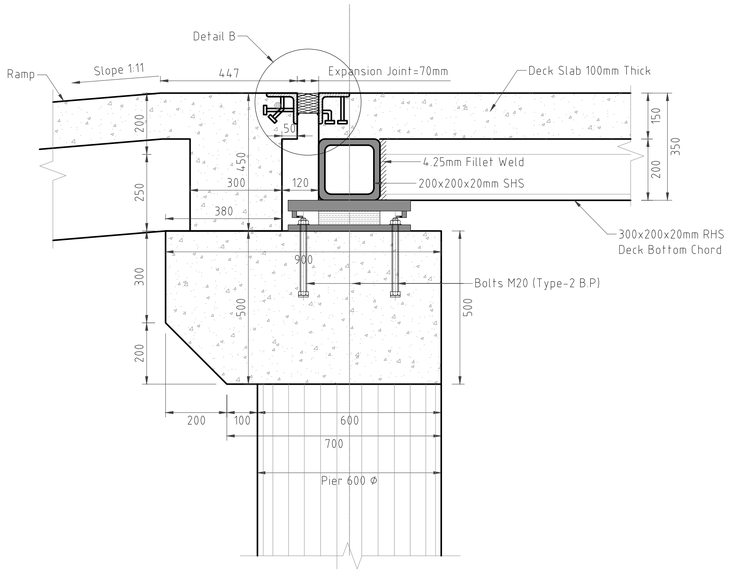

SECTION Y-Y
SCALE: 1:10

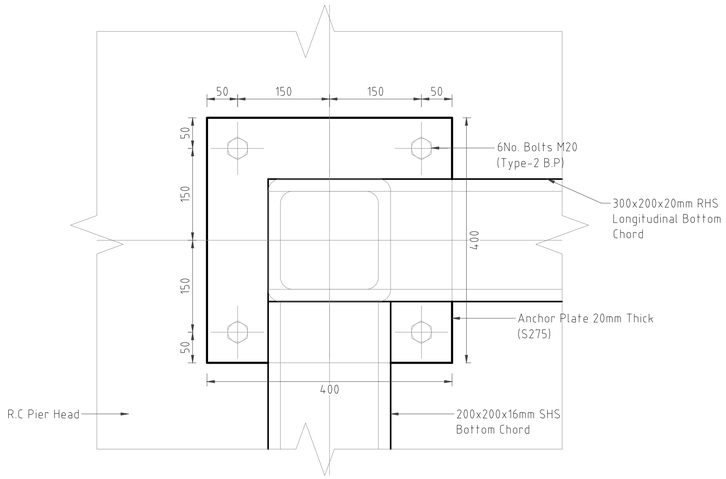

DETAIL B
SCALE: 1:5

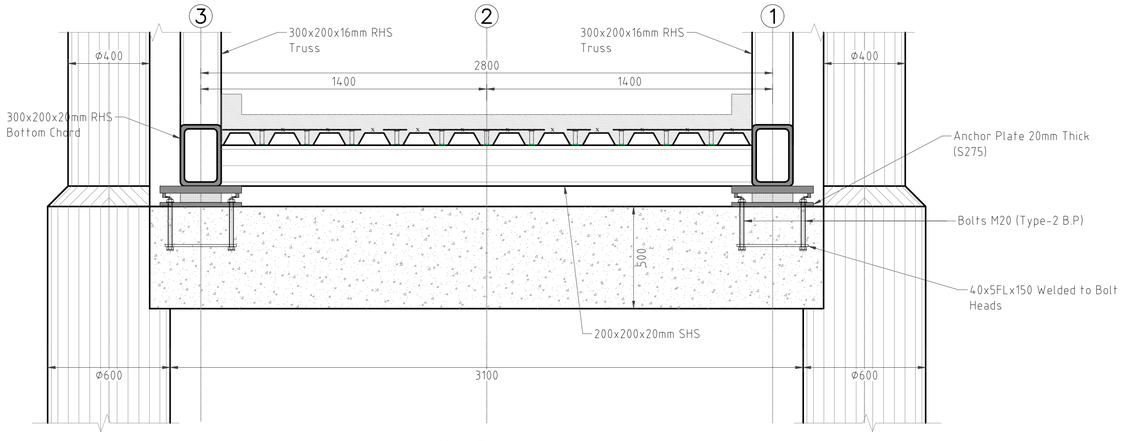

SECTION X-X
SCALE: 1:15

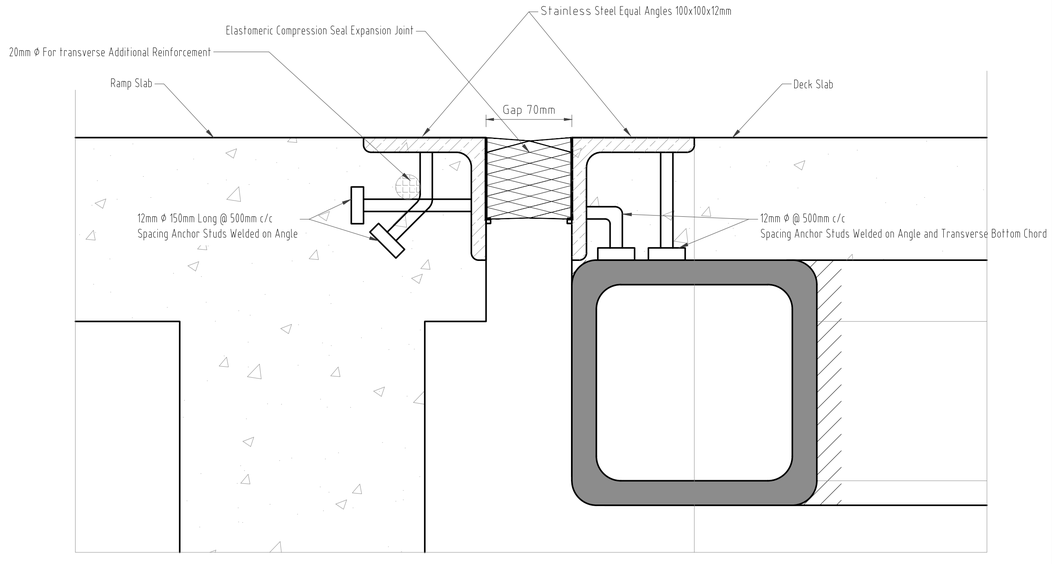

DETAIL B: 70mm COMPRESSION SEAL EXPANSION JOINT
SCALE: 1:2.5

CLIENT:

KENYA NATIONAL HIGHWAY AUTHORITY
Barabara Plaza,
Off Airport South Road,
P. O. Box, 49712 - 00100,
NAIROBI.

KENYA URBAN ROADS AUTHORITY
Barabara Plaza,
Off Airport South Road,
P. O. Box, 49712 - 00100,
NAIROBI.

FINANCIER:

THE WORLD BANK

PROJECT:

HORN OF AFRICA GATEWAY DEVELOPMENT PROJECT (HOAGDP): -

Consultancy Services for the Design and Works Supervision for the Proposed Extension of Meru Bypass.

CONTRACT NO:

KeNHA/RD/CS/D/4205/2024

CONSULTANT:

One Padmore Place 6th Floor,
George Padmore Road,
P. O. Box, 76672 - 00508,
NAIROBI.

DESIGN DETAILS

Action	Name	Date
Designed By:	I.O	AUG 2025
Drawn By:	W.O	AUG 2025
Checked By:	S.I	AUG 2025
Approved By:	S.O	AUG 2025

DRAWING REVISIONS

No.	Revision Details	Reviewed	Initials	Date	Approved
		By			
		Checked			
		By			
		Checked			
		By			
		Checked			
		By			
		Checked			
		By			
		Checked			

DRAWING TITLE:

PIER HEAD DETAILS

DRAWING SCALE:

AS SHOWN

DRAWING NO:

TYP - FB1-015

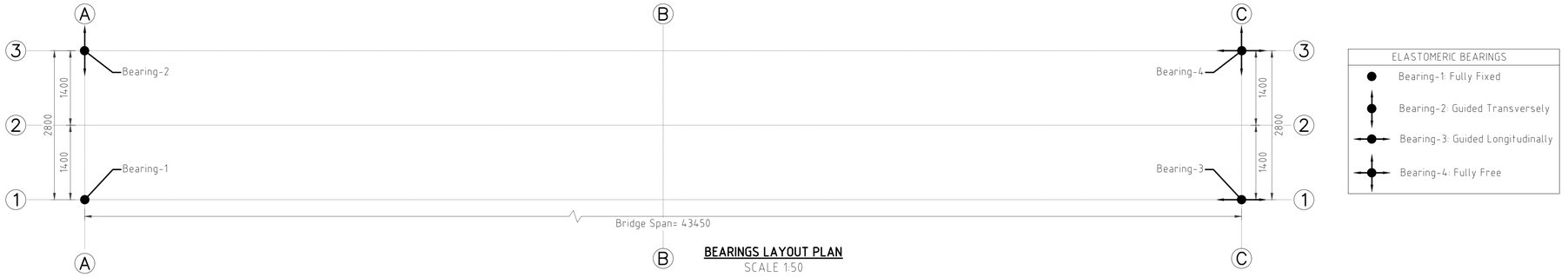

BEARINGS LAYOUT PLAN
SCALE 1:50

BEARING-1: FULLY FIXED

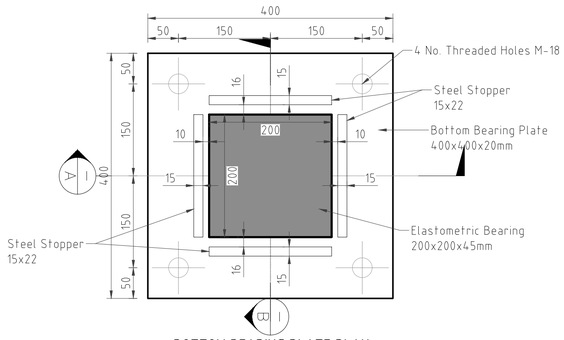

BOTTOM BEARING PLATE PLAN
SCALE: 1:5

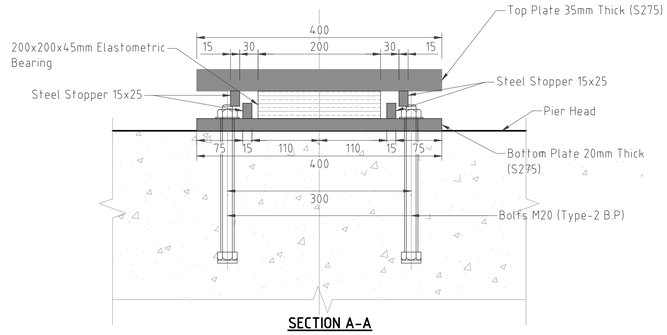

SECTION A-A
SCALE: 1:5

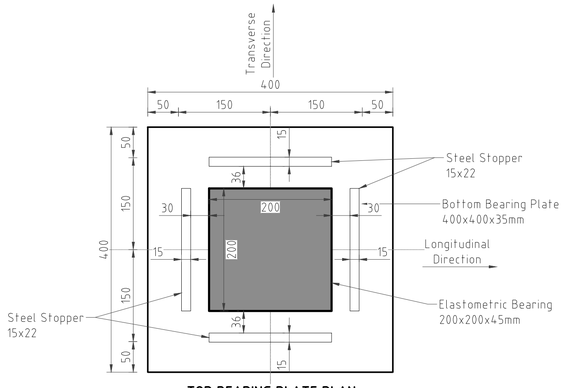

TOP BEARING PLATE PLAN
SCALE: 1:5

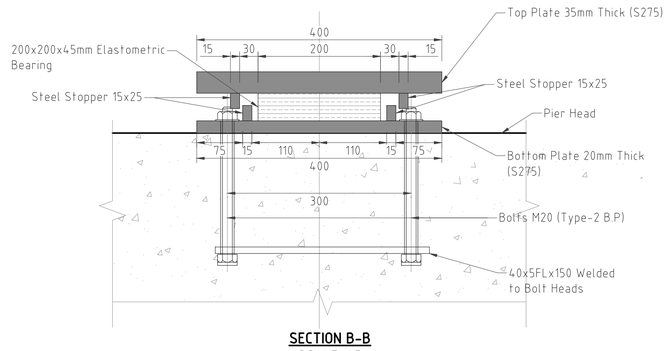

SECTION B-B
SCALE: 1:5

CLIENT:

KENYA NATIONAL HIGHWAY AUTHORITY
Barabara Plaza,
Off Airport South Road,
P. O. Box, 49712 - 00100,
NAIROBI.

KENYA URBAN ROADS AUTHORITY
Barabara Plaza,
Off Airport South Road,
P. O. Box, 49712 - 00100,
NAIROBI.

FINANCIER:

THE WORLD BANK

PROJECT:

HORN OF AFRICA GATEWAY DEVELOPMENT PROJECT (HOAGDP): -

Consultancy Services for the Design and Works Supervision for the Proposed Extension of Meru Bypass.

CONTRACT NO:

KeNHA/RD/CS/D/4205/2024

CONSULTANT:

One Padmore Place 6th Floor,
George Padmore Road,
P. O. Box, 76672 - 00508,
NAIROBI.

DESIGN DETAILS		
Action	Name	Date
Designed By:	LO	AUG 2025
Drawn By:	W.O	AUG 2025
Checked By:	S.I	AUG 2025
Approved By:	S.O	AUG 2025

DRAWING REVISIONS						
No.	Revision Details	Reviewed	Initials	Date	Approved
		By			
		Checked			
		By			
		Checked			
		By			
		Checked			
		By			
		Checked			
		By			
		Checked			

DRAWING TITLE:

BEARINGS DETAILS

DRAWING SCALE:

AS SHOWN

DRAWING NO:

TYP - FB1-016

BEARING-2:GUIDED TRANSVERSELY

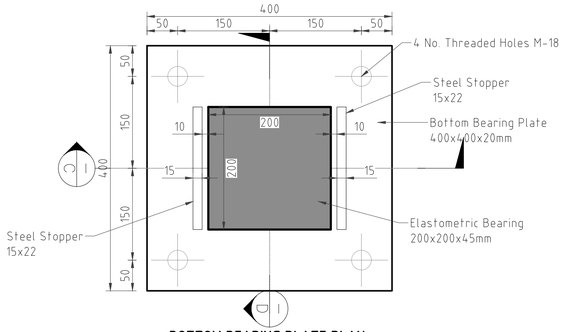

BOTTOM BEARING PLATE PLAN
SCALE: 1:5

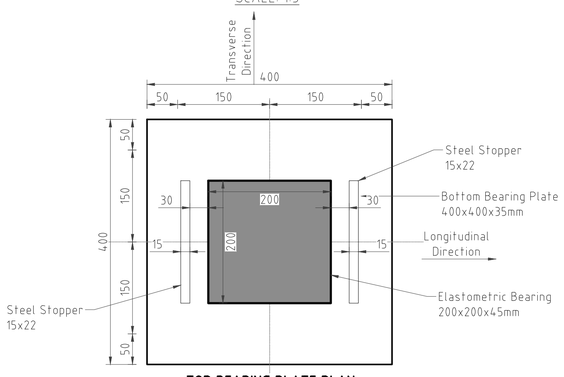

TOP BEARING PLATE PLAN
SCALE: 1:5

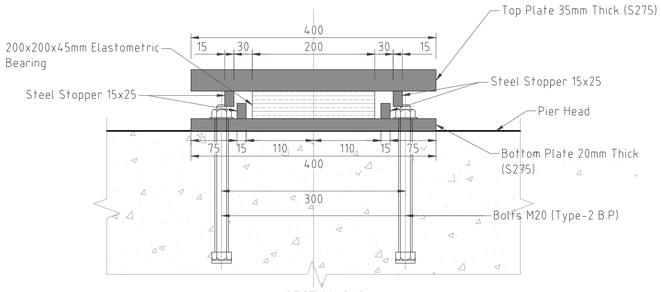

SECTION C-C
SCALE: 1:5

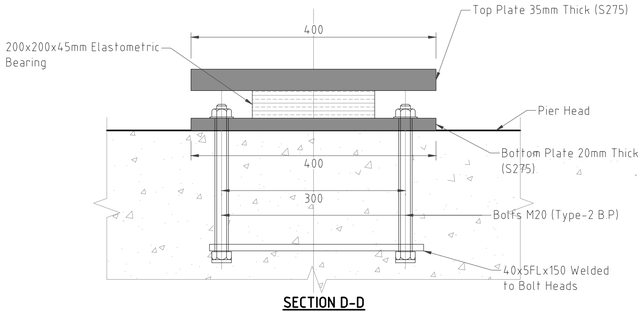

SECTION D-D
SCALE: 1:5

BEARING-3:GUIDED LONGITUDINALLY

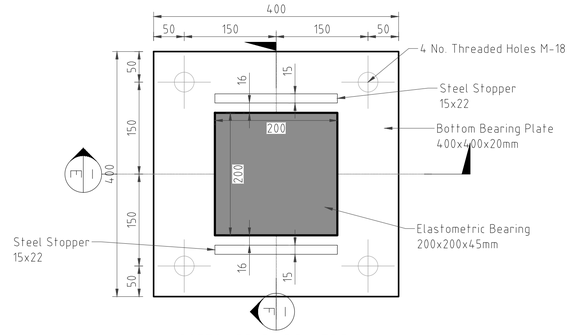

BOTTOM BEARING PLATE PLAN
SCALE: 1:5

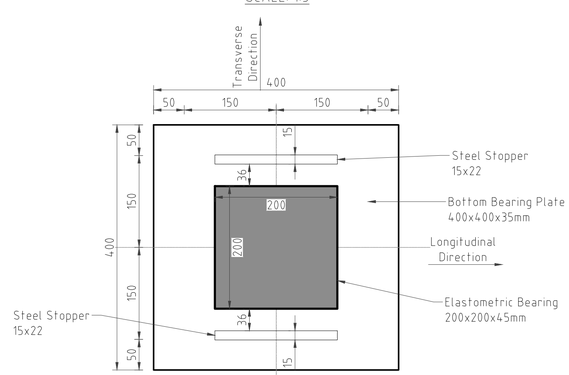

TOP BEARING PLATE PLAN
SCALE: 1:5

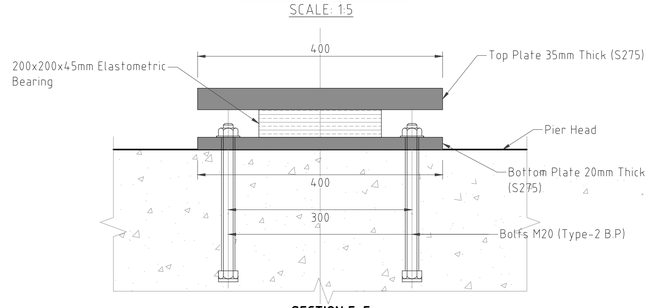

SECTION E-E
SCALE: 1:5

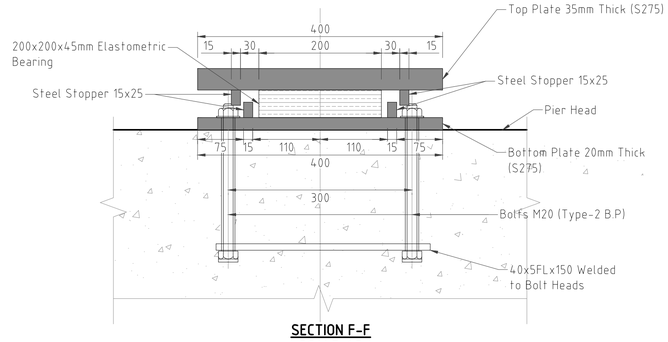

SECTION F-F
SCALE: 1:5

BEARING-4: FULLY FREE

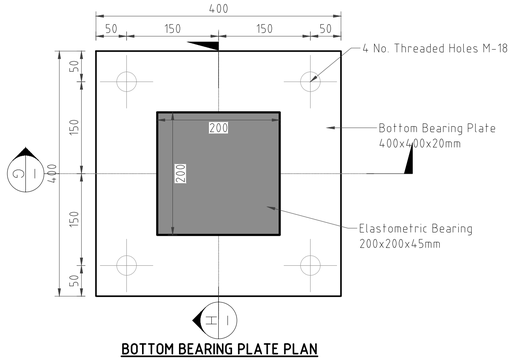

BOTTOM BEARING PLATE PLAN
SCALE: 1:5

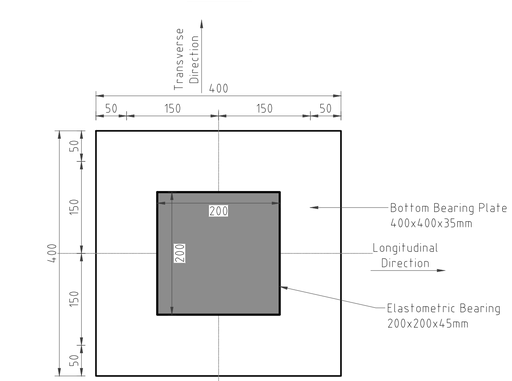

TOP BEARING PLATE PLAN
SCALE: 1:5

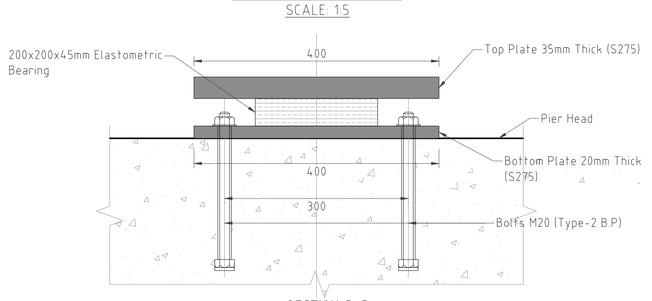

SECTION G-G
SCALE: 1:5

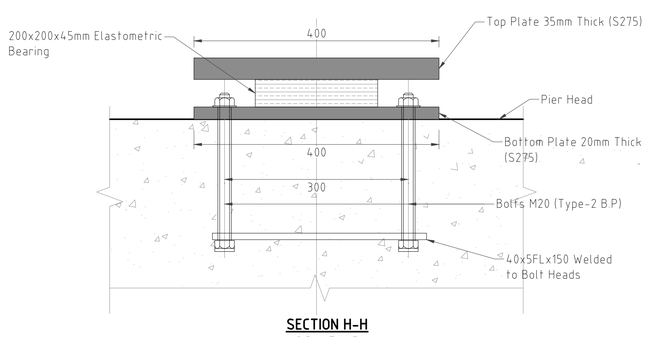

SECTION H-H
SCALE: 1:5

CLIENT:

KENYA NATIONAL HIGHWAY AUTHORITY
Barabara Plaza,
Off Airport South Road,
P. O. Box, 49712 - 00100,
NAIROBI.

KENYA URBAN ROADS AUTHORITY
Barabara Plaza,
Off Airport South Road,
P. O. Box, 49712 - 00100,
NAIROBI.

FINANCIER:

THE WORLD BANK

PROJECT:

HORN OF AFRICA GATEWAY DEVELOPMENT PROJECT (HOAGDP): -

Consultancy Services for the Design and Works Supervision for the Proposed Extension of Meru Bypass.

CONTRACT NO:

KeNHA/RD/CS/D/4205/2024

CONSULTANT:

One Padmore Place 6th Floor,
George Padmore Road,
P. O. Box, 76672 - 00508,
NAIROBI.

DESIGN DETAILS

Action	Name	Date
Designed By:	I.O	AUG 2025
Drawn By:	W.O	AUG 2025
Checked By:	S.I	AUG 2025
Approved By:	S.O	AUG 2025

DRAWING REVISIONS

No.	Revision Details	Reviewed	Initials	Date	Approved
		By			
		Checked			
		By			
		Checked			
		By			
		Checked			
		By			
		Checked			
		By			
		Checked			

DRAWING TITLE:

BEARINGS DETAILS

DRAWING SCALE:

AS SHOWN

DRAWING NO:

TYP - FB1-017

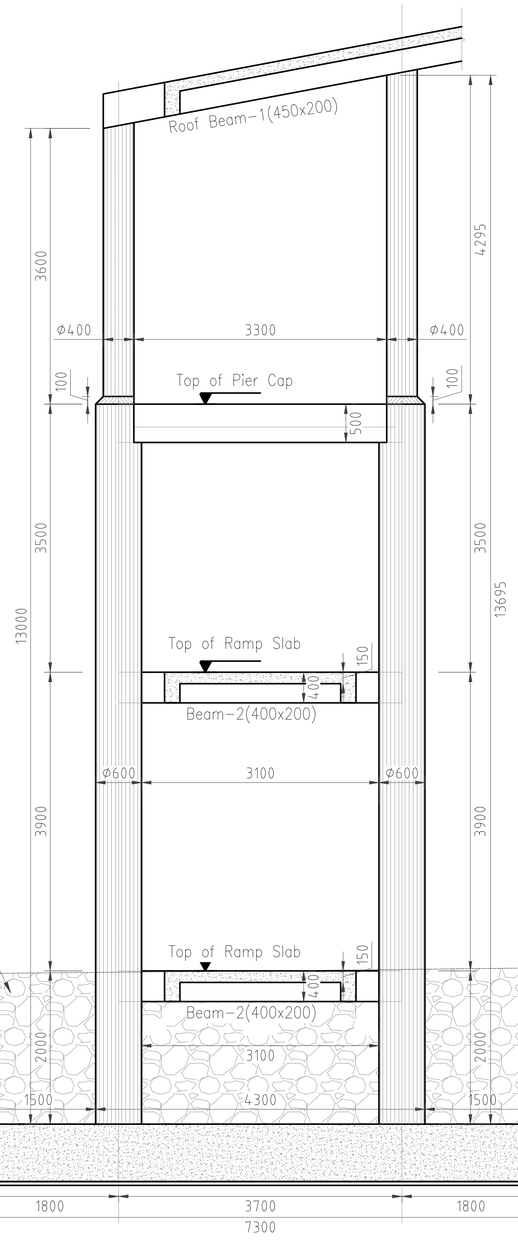

PIER ELEVATION

SCALE 1:50

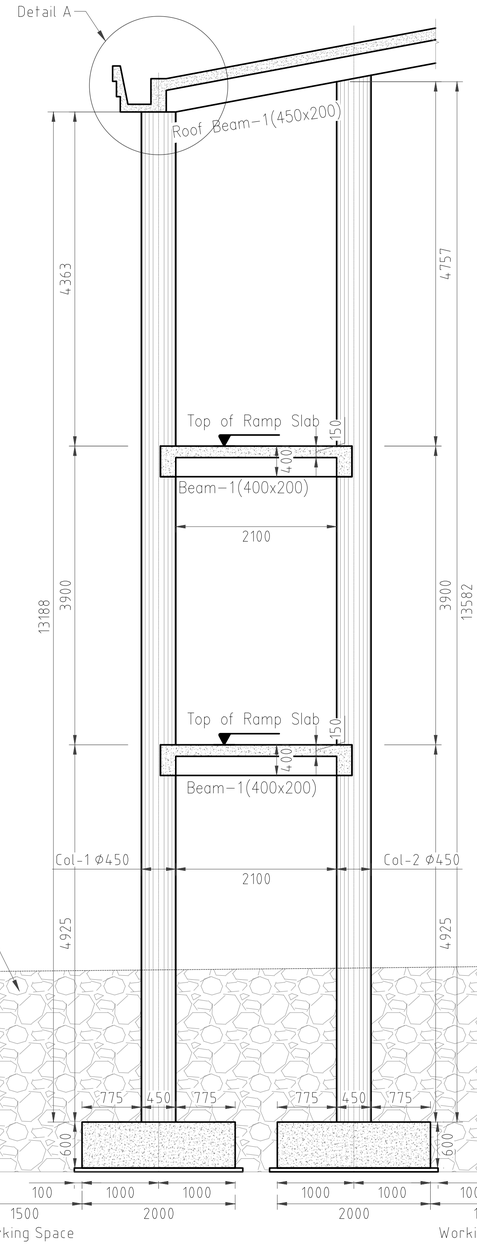

COLUMN-1 ELEVATION

SCALE 1:50

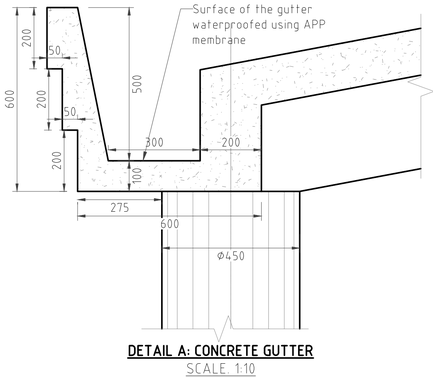

DETAIL A: CONCRETE GUTTER

SCALE 1:10

CLIENT:

KENYA NATIONAL HIGHWAY AUTHORITY
Barabara Plaza,
Off Airport South Road,
P. O. Box, 49712 - 00100,
NAIROBI.

KENYA URBAN ROADS AUTHORITY
Barabara Plaza,
Off Airport South Road,
P. O. Box, 49712 - 00100,
NAIROBI.

FINANCIER:

THE WORLD BANK

PROJECT:

HORN OF AFRICA GATEWAY DEVELOPMENT PROJECT (HOAGDP): -

Consultancy Services for the Design and Works Supervision for the Proposed Extension of Meru Bypass.

CONTRACT NO:

KeNHA/RD/CS/D/4205/2024

CONSULTANT:

One Padmore Place 6th Floor,
George Padmore Road,
P. O. Box, 76672 - 00508,
NAIROBI.

DESIGN DETAILS

Action	Name	Date
Designed By:	I.O	AUG 2025
Drawn By:	W.O	AUG 2025
Checked By:	S.I	AUG 2025
Approved By:	S.O	AUG 2025

DRAWING REVISIONS

No.	Revision Details	Reviewed	Initials	Date	Approved
		By			
		Checked			
		By			
		Checked			
		By			
		Checked			
		By			
		Checked			
		By			
		Checked			

DRAWING TITLE:

COLUMNS ELEVATIONS

DRAWING SCALE:

AS SHOWN

DRAWING NO:

TYP - FB1-018

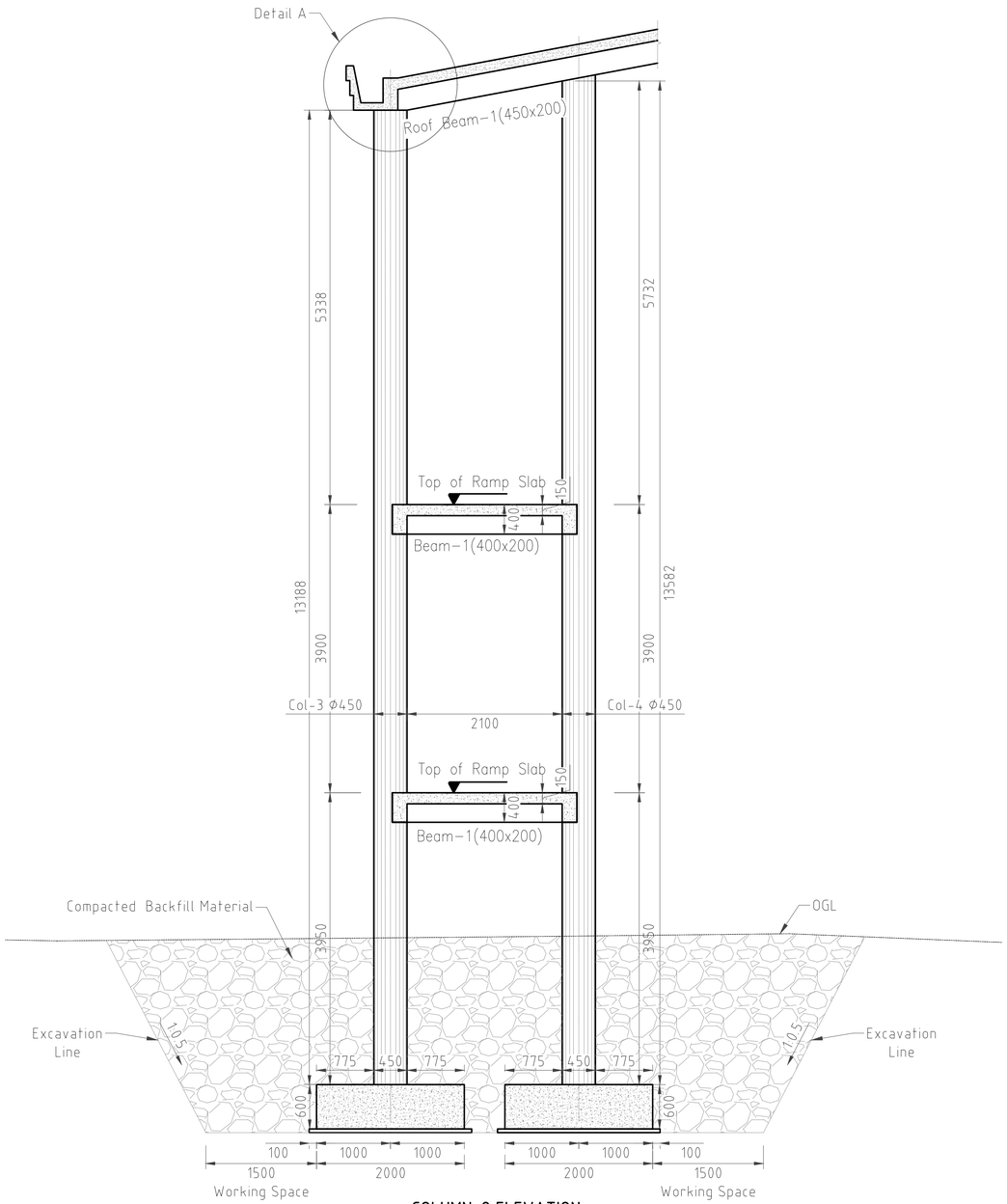

COLUMN-2 ELEVATION
SCALE 1:50

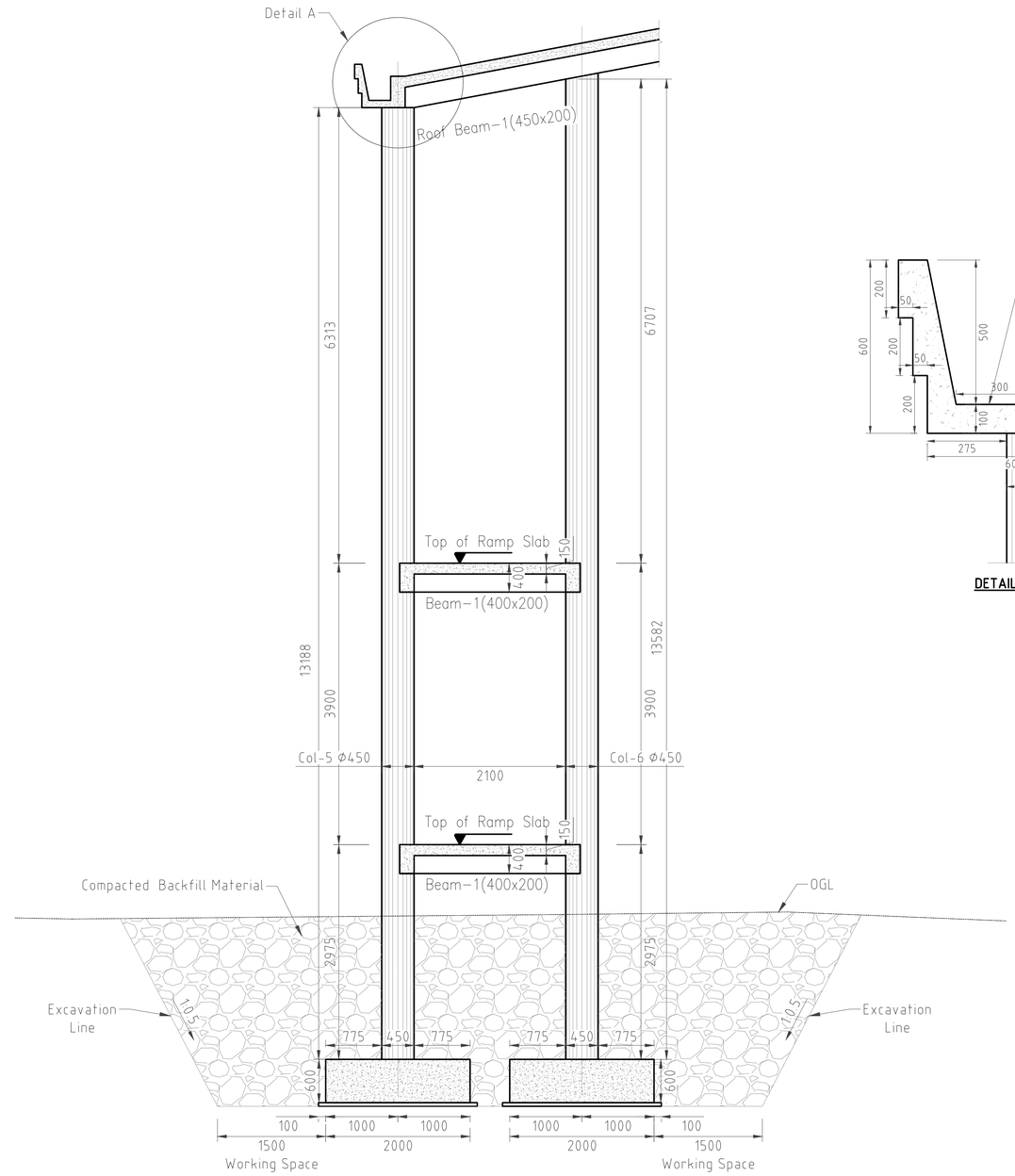

COLUMN-3 ELEVATION
SCALE 1:50

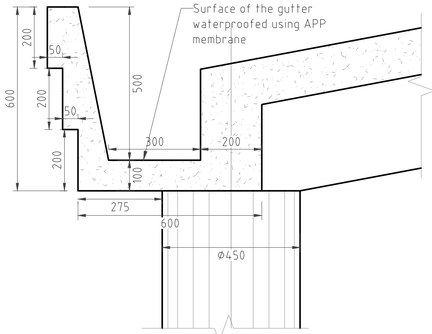

DETAIL A: CONCRETE GUTTER
SCALE 1:10

CLIENT:
KENYA NATIONAL HIGHWAY AUTHORITY
Barabara Plaza,
Off Airport South Road,
P. O. Box, 49712 - 00100,
NAIROBI.

KENYA URBAN ROADS AUTHORITY
Barabara Plaza,
Off Airport South Road,
P. O. Box, 49712 - 00100,
NAIROBI.

FINANCIER:
THE WORLD BANK

PROJECT:
HORN OF AFRICA GATEWAY DEVELOPMENT PROJECT (HOAGDP): -

Consultancy Services for the Design and Works Supervision for the Proposed Extension of Meru Bypass.

CONTRACT NO:
KeNHA/RD/CS/D/4205/2024

CONSULTANT:
egis
One Padmore Place 6th Floor,
George Padmore Road,
P. O. Box, 76672 - 00508,
NAIROBI.

DESIGN DETAILS

Action	Name	Date
Designed By:	I.O	AUG 2025
Drawn By:	W.O	AUG 2025
Checked By:	S.I	AUG 2025
Approved By:	S.O	AUG 2025

DRAWING REVISIONS

No.	Revision Details	Reviewed	Initials	Date	Approved
		By			
		Checked			
		By			
		Checked			
		By			
		Checked			
		By			
		Checked			
		By			
		Checked			

DRAWING TITLE:
COLUMNS ELEVATIONS

DRAWING SCALE:
AS SHOWN

DRAWING NO:
TYP - FB1-019

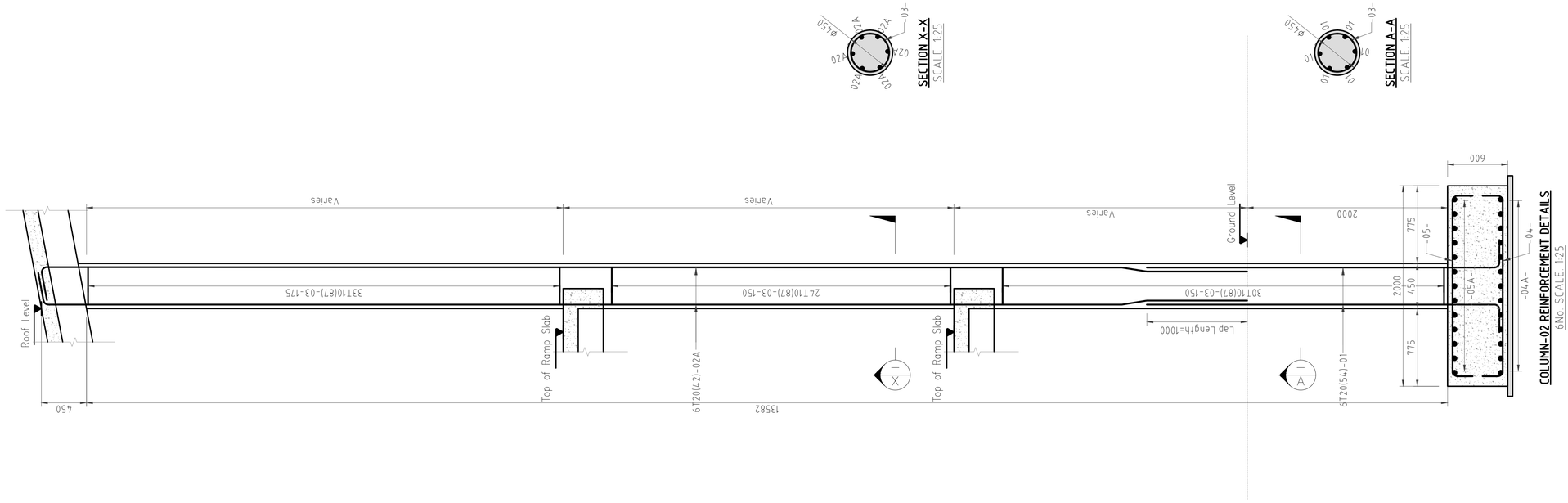

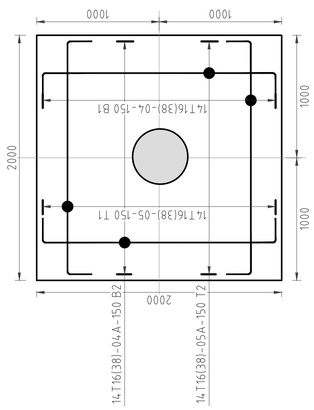

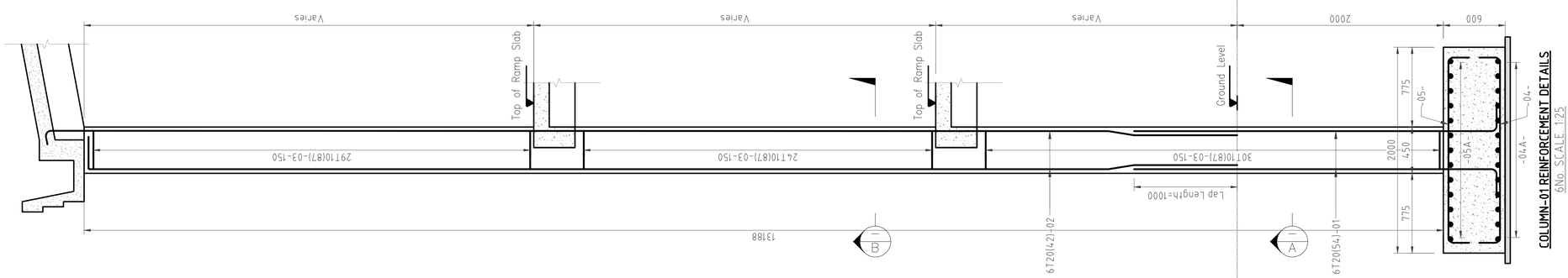

CLIENT:

KENYA NATIONAL HIGHWAY AUTHORITY
Barabara Plaza,
Off Airport South Road,
P. O. Box, 49712 - 00100,
NAIROBI.

KENYA URBAN ROADS AUTHORITY
Barabara Plaza,
Off Airport South Road,
P. O. Box, 49712 - 00100,
NAIROBI.

FINANCIER:

THE WORLD BANK

PROJECT:

HORN OF AFRICA GATEWAY DEVELOPMENT PROJECT (HOAGDP): -

Consultancy Services for the Design and Works Supervision for the Proposed Extension of Meru Bypass.

CONTRACT NO:

KeNHA/RD/CS/D/4205/2024

CONSULTANT:

One Padmore Place 6th Floor,
George Padmore Road,
P. O. Box, 76672 - 00508,
NAIROBI.

DESIGN DETAILS

Action	Name	Date
Designed By:	I.O	AUG 2025
Drawn By:	W.O	AUG 2025
Checked By:	S.I	AUG 2025
Approved By:	S.O	AUG 2025

DRAWING REVISIONS

No.	Revision Details	Reviewed	Initials	Date	Approved
		By			
		Checked			
		By			
		Checked			
		By			
		Checked			
		By			
		Checked			
		By			
		Checked			

DRAWING TITLE:

COLUMN-01 AND COLUMN-02 REINFORCEMENT DETAILS

DRAWING SCALE:

AS SHOWN

DRAWING NO:

TYP - FB1-020

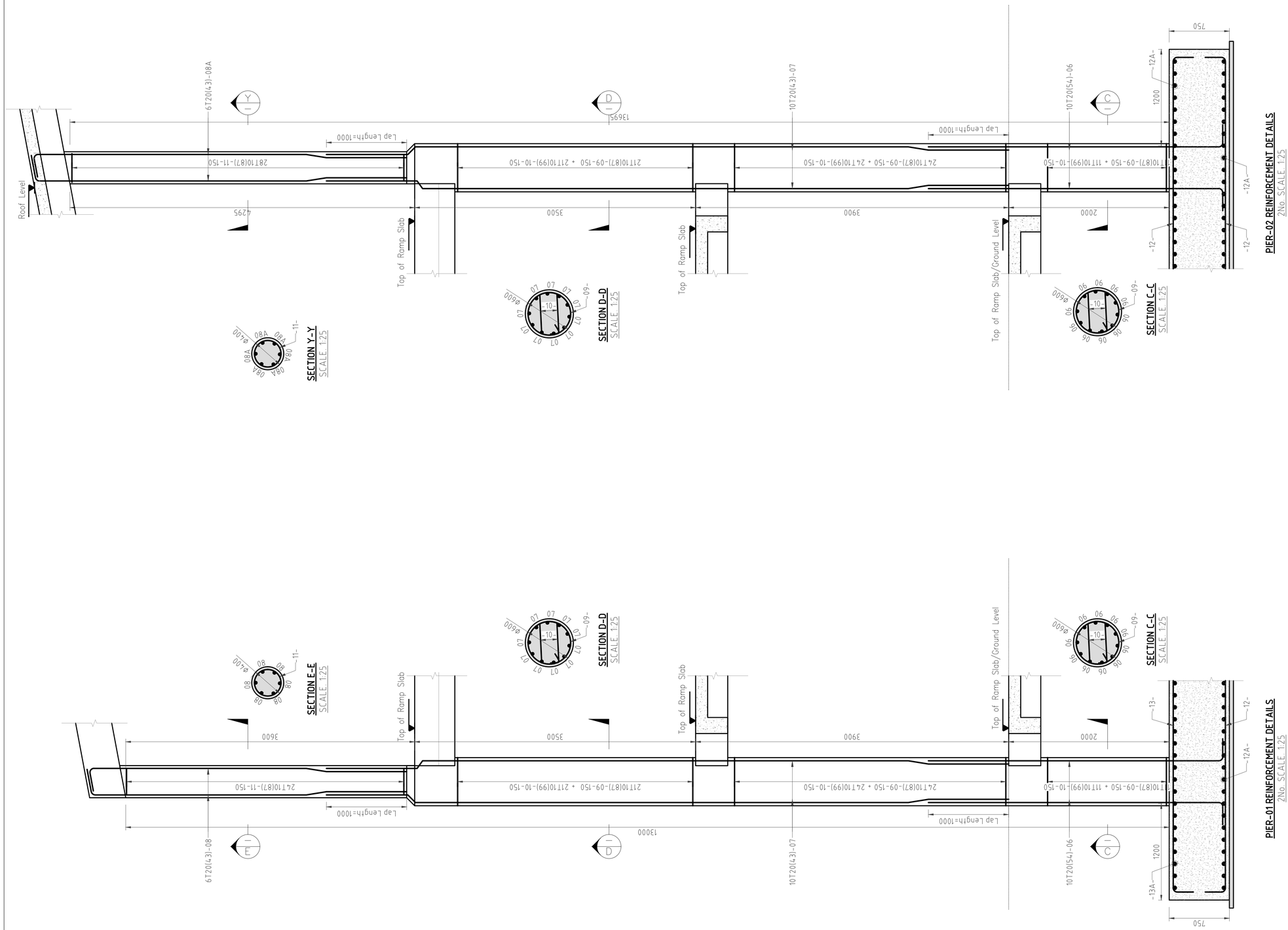

CLIENT:

KENYA NATIONAL HIGHWAY AUTHORITY
Barabara Plaza,
Off Airport South Road,
P. O. Box, 49712 - 00100,
NAIROBI.

KENYA URBAN ROADS AUTHORITY
Barabara Plaza,
Off Airport South Road,
P. O. Box, 49712 - 00100,
NAIROBI.

FINANCIER:

THE WORLD BANK

PROJECT:

HORN OF AFRICA GATEWAY DEVELOPMENT PROJECT (HOAGDP): -

Consultancy Services for the Design and Works Supervision for the Proposed Extension of Meru Bypass.

CONTRACT NO:

KeNHA/RD/CS/D/4205/2024

CONSULTANT:

One Padmore Place 6th Floor,
George Padmore Road,
P. O. Box, 76672 - 00508,
NAIROBI.

DESIGN DETAILS

Action	Name	Date
Designed By:	I.O	AUG 2025
Drawn By:	W.O	AUG 2025
Checked By:	S.I	AUG 2025
Approved By:	S.O	AUG 2025

DRAWING REVISIONS

No.	Revision Details	Reviewed	Initials	Date	Approved
		By			
		Checked			
		By			
		Checked			
		By			
		Checked			
		By			
		Checked			
		By			
		Checked			

DRAWING TITLE:

PIER-1 AND PIER-2 REINFORCEMENT DETAILS

DRAWING SCALE:

AS SHOWN

DRAWING NO:

TYP - FB1-021

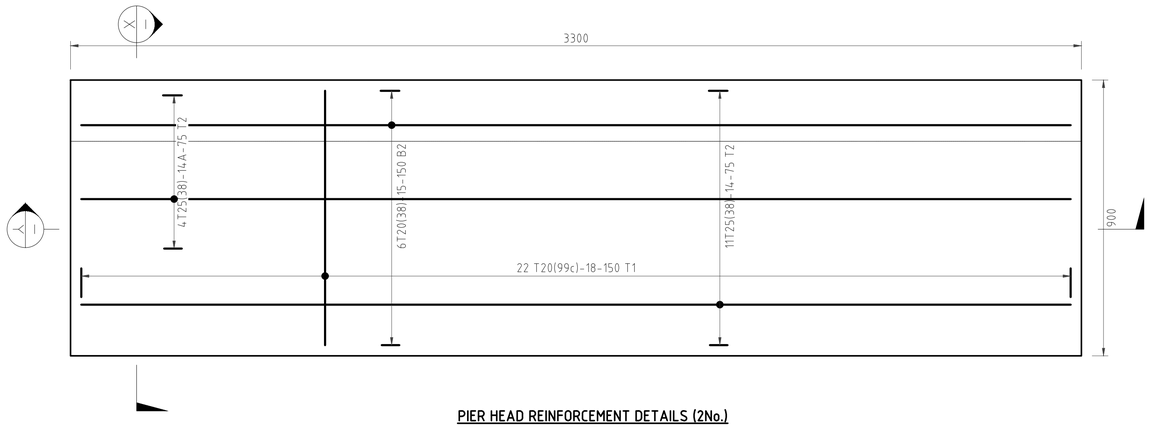

PIER HEAD REINFORCEMENT DETAILS (2No.)
SCALE. 1:10

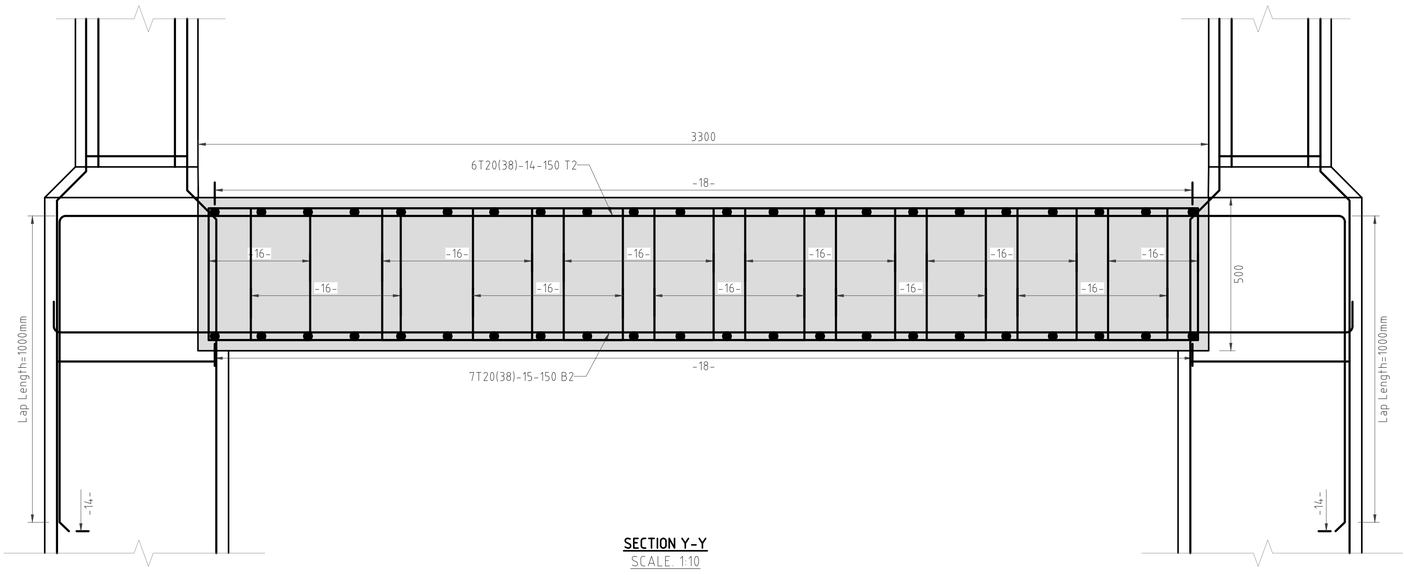

SECTION Y-Y
SCALE. 1:10

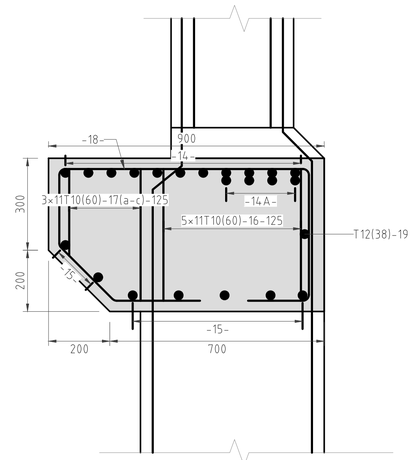

SECTION X-X
SCALE. 1:10

CLIENT:
KENYA NATIONAL HIGHWAY AUTHORITY
Barabara Plaza,
Off Airport South Road,
P. O. Box, 49712 - 00100,
NAIROBI.

KENYA URBAN ROADS AUTHORITY
Barabara Plaza,
Off Airport South Road,
P. O. Box, 49712 - 00100,
NAIROBI.

FINANCIER:
THE WORLD BANK

PROJECT:
HORN OF AFRICA GATEWAY DEVELOPMENT PROJECT (HOAGDP): -

Consultancy Services for the Design and Works Supervision for the Proposed Extension of Meru Bypass.

CONTRACT NO:
KeNHA/RD/CS/D/4205/2024

CONSULTANT:
One Padmore Place 6th Floor,
George Padmore Road,
P. O. Box, 76672 - 00508,
NAIROBI.

DESIGN DETAILS		
Action	Name	Date
Designed By:	I.O	AUG 2025
Drawn By:	W.O	AUG 2025
Checked By:	S.I	AUG 2025
Approved By:	S.O	AUG 2025

DRAWING REVISIONS					
No.	Revision Details	Reviewed	Initials	Date	Approved
		By			
		Checked			
		By			
		Checked			
		By			
		Checked			
		By			
		Checked			
		By			
		Checked			

DRAWING TITLE:
PIER HEAD REINFORCEMENT DETAILS

DRAWING SCALE:
AS SHOWN

DRAWING NO:
TYP - FB1-022

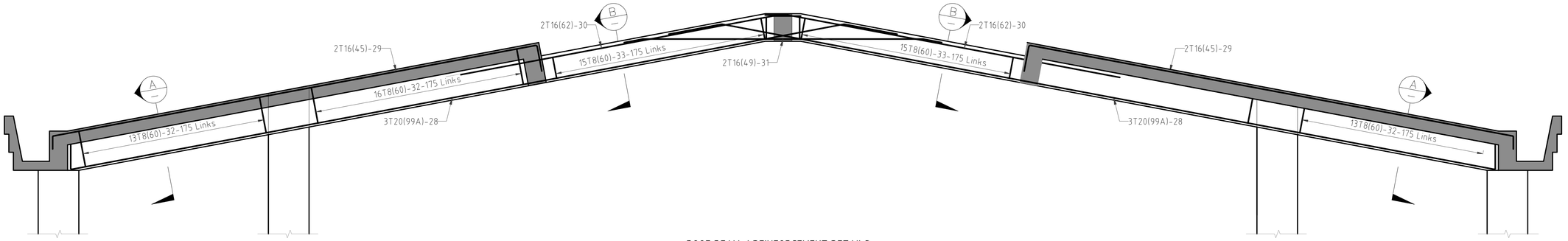

ROOF BEAM-1 REINFORCEMENT DETAILS
2No. SCALE: 1:25

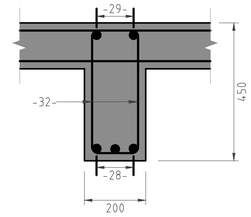

SECTION A-A
SCALE: 1:10

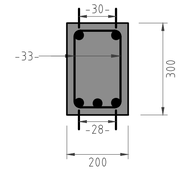

SECTION B-B
SCALE: 1:10

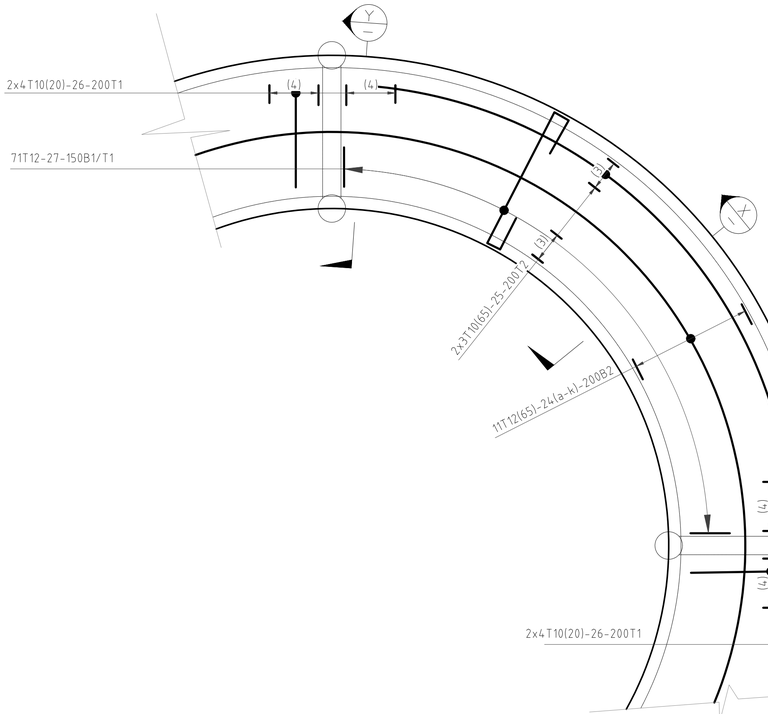

TYPICAL RAMP SLAB REINFORCEMENT DETAILS
SCALE: 1:50

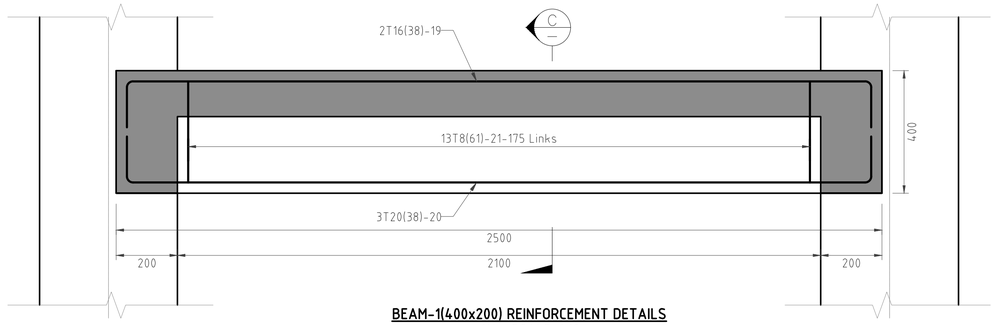

BEAM-1(400x200) REINFORCEMENT DETAILS
6No. SCALE: 1:10

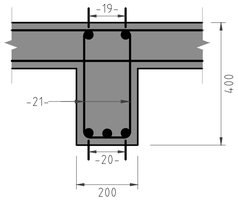

SECTION C-C
SCALE: 1:10

BEAM-2(400x200) REINFORCEMENT DETAILS
2No. SCALE: 1:10

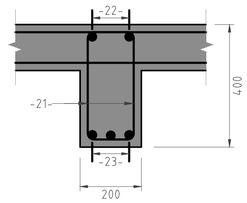

SECTION D-D
SCALE: 1:10

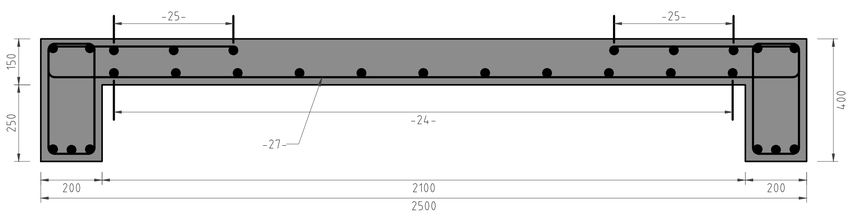

SECTION X-X
SCALE: 1:10

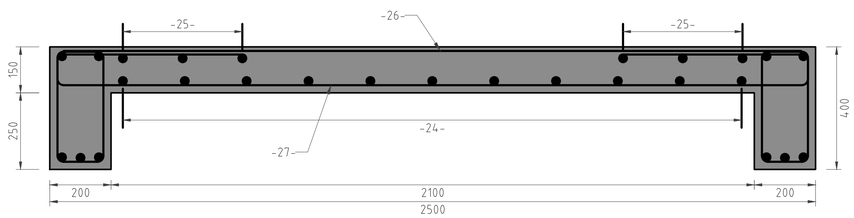

SECTION Y-Y
SCALE: 1:10

CLIENT:

KENYA NATIONAL HIGHWAY AUTHORITY
Barabara Plaza,
Off Airport South Road,
P. O. Box, 49712 - 00100,
NAIROBI.

KENYA URBAN ROADS AUTHORITY
Barabara Plaza,
Off Airport South Road,
P. O. Box, 49712 - 00100,
NAIROBI.

FINANCIER:

THE WORLD BANK

PROJECT:

HORN OF AFRICA GATEWAY DEVELOPMENT PROJECT (HOAGDP): -

Consultancy Services for the Design and Works Supervision for the Proposed Extension of Meru Bypass.

CONTRACT NO:

KeNHA/RD/CS/D/4205/2024

CONSULTANT:

One Padmore Place 6th Floor,
George Padmore Road,
P. O. Box, 76672 - 00508,
NAIROBI.

DESIGN DETAILS

Action	Name	Date
Designed By:	LO	AUG 2025
Drawn By:	W.O	AUG 2025
Checked By:	S.I	AUG 2025
Approved By:	S.O	AUG 2025

DRAWING REVISIONS

No.	Revision Details	Reviewed	Initials	Date	Approved
		By			
		Checked			
		By			
		Checked			
		By			
		Checked			
		By			
		Checked			
		By			
		Checked			

DRAWING TITLE:

BEAMS & RAMP SLAB REINFORCEMENT DETAILS

DRAWING SCALE:

AS SHOWN

DRAWING NO:

TYP - FB1-023

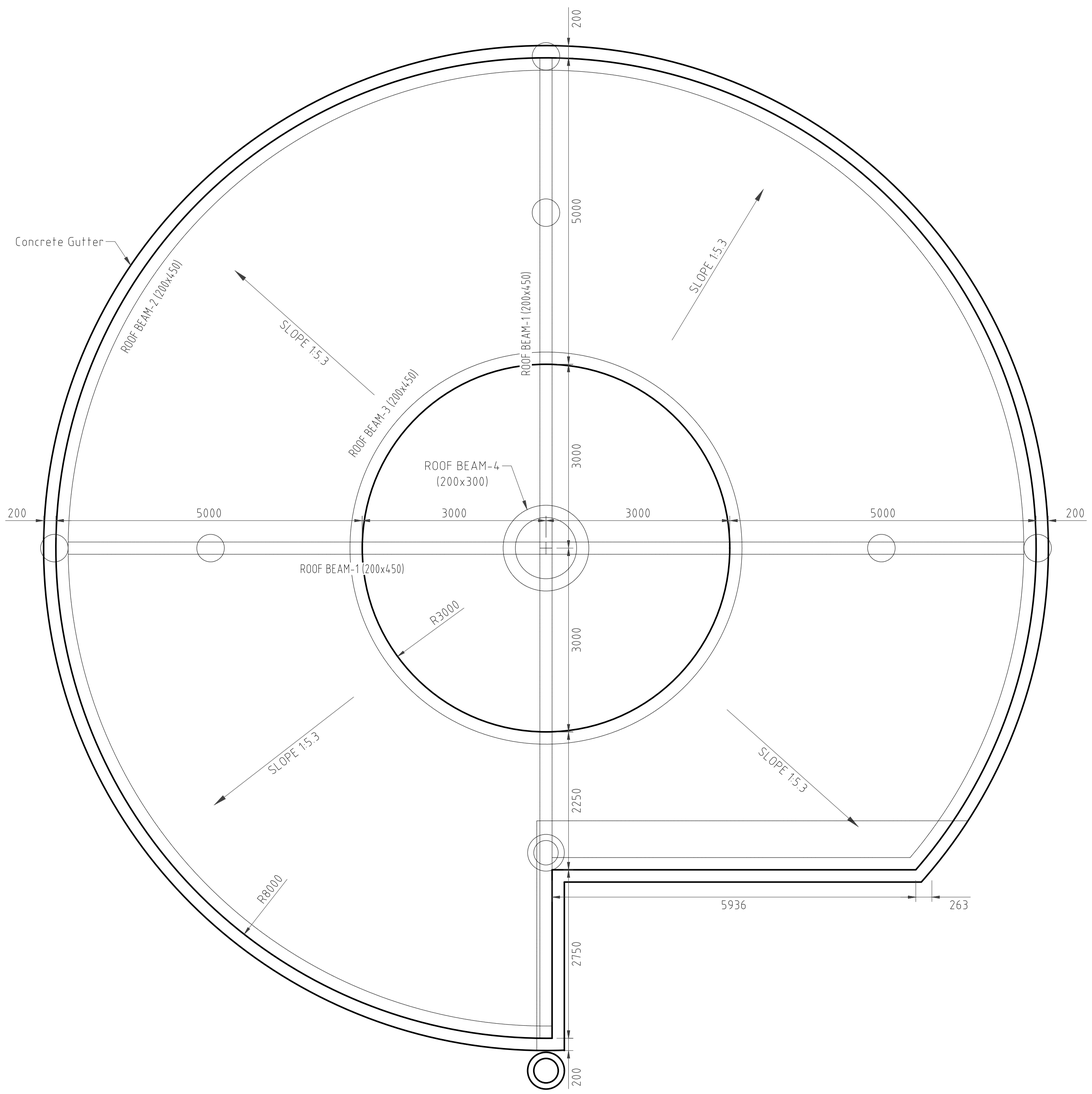

ROOF SLAB LAYOUT PLAN
SCALE 1:50

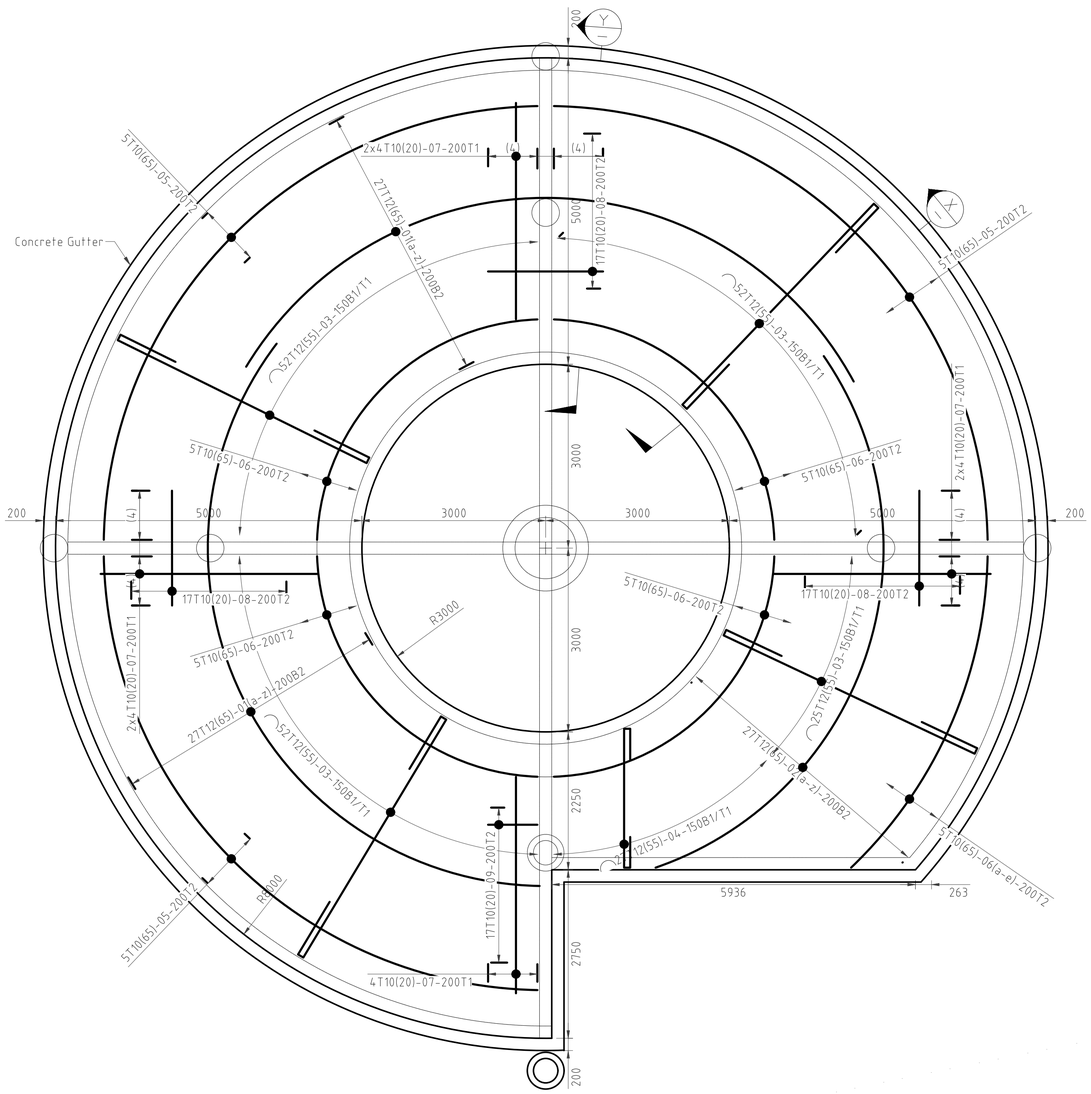

ROOF SLAB LAYOUT PLAN
SCALE 1:50

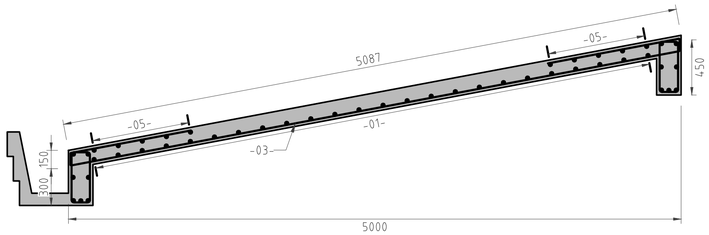

SECTION X-X
SCALE. 1:25

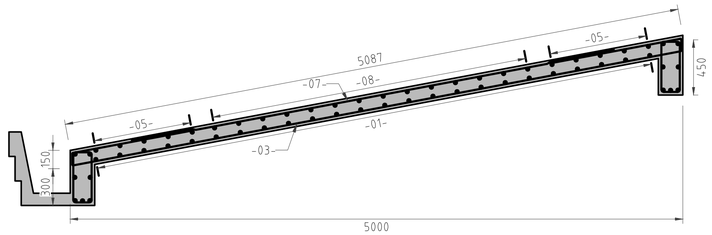

SECTION Y-Y
SCALE. 1:25

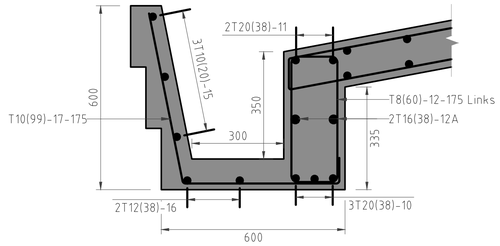

ROOF BEAM-2 & CONCRETE CGUTTER REINFORCEMENT DETAILS
SCALE. 1:10

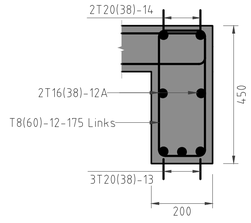

ROOF BEAM-3 REINFORCEMENT DETAILS
SCALE. 1:10

CLIENT:

Kenya National Highways Authority
Quality Highways, Better Connections

KENYA NATIONAL HIGHWAY AUTHORITY
Barabara Plaza,
Off Airport South Road,
P. O. Box, 49712 - 00100,
NAIROBI.

KENYA URBAN ROADS AUTHORITY
Barabara Plaza,
Off Airport South Road,
P. O. Box, 49712 - 00100,
NAIROBI.

FINANCIER:

THE WORLD BANK

PROJECT:

HORN OF AFRICA GATEWAY DEVELOPMENT PROJECT (HOAGDP): -

Consultancy Services for the Design and Works Supervision for the Proposed Extension of Meru Bypass.

CONTRACT NO:

KeNHA/RD/CS/D/4205/2024

CONSULTANT:

egis

One Padmore Place 6th Floor,
George Padmore Road,
P. O. Box, 76672 - 00508,
NAIROBI.

DESIGN DETAILS

Action	Name	Date
Designed By:	I.O	AUG 2025
Drawn By:	W.O	AUG 2025
Checked By:	S.I	AUG 2025
Approved By:	S.O	AUG 2025

DRAWING REVISIONS

No.	Revision Details		Initials	Date	Approved
		By			
		Checked			
		By			
		Checked			
		By			
		Checked			
		By			
		Checked			
		By			
		Checked			

DRAWING TITLE:

RAMP ROOF SLAB LAYOUT PLAN AND REINFORCEMENT DETAILS

DRAWING SCALE:

AS SHOWN

DRAWING NO:

TYP - FB1-024

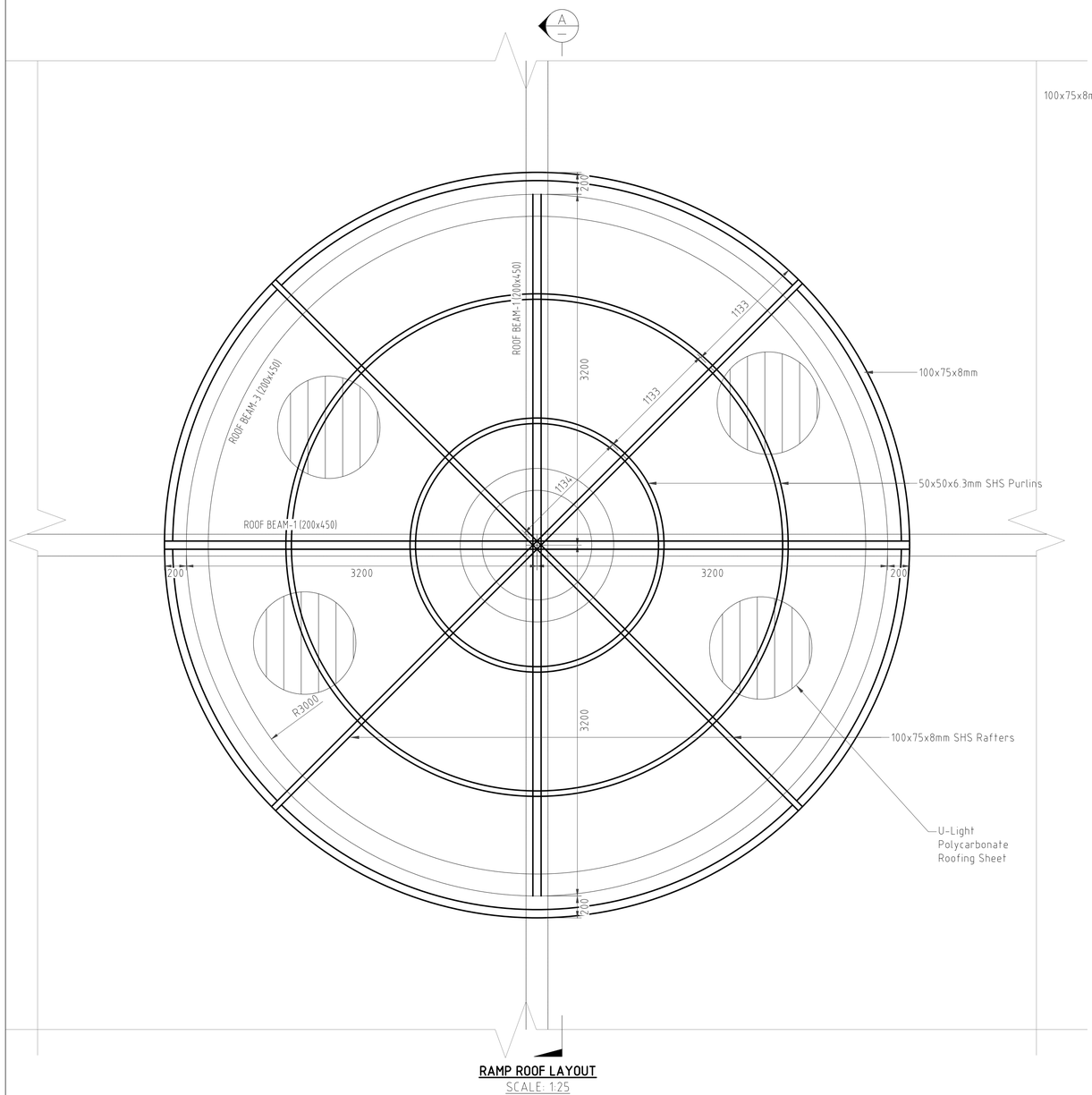

RAMP ROOF LAYOUT
SCALE: 1:25

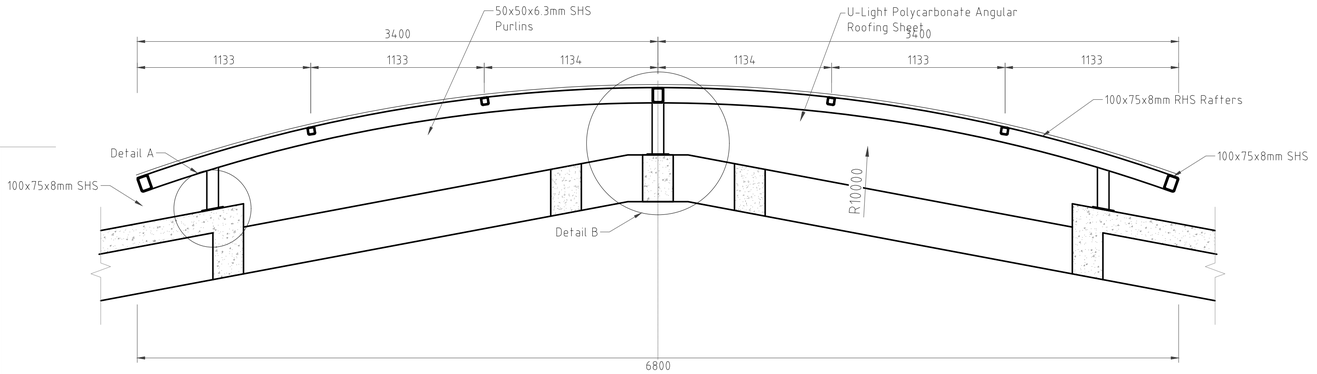

SECTION A-A
SCALE: 1:20

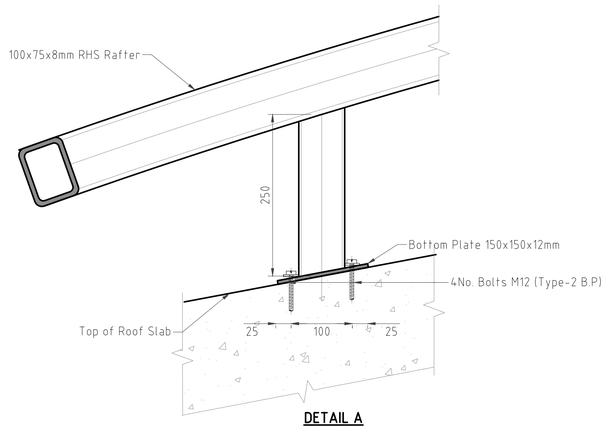

DETAIL A
SCALE: 1:5

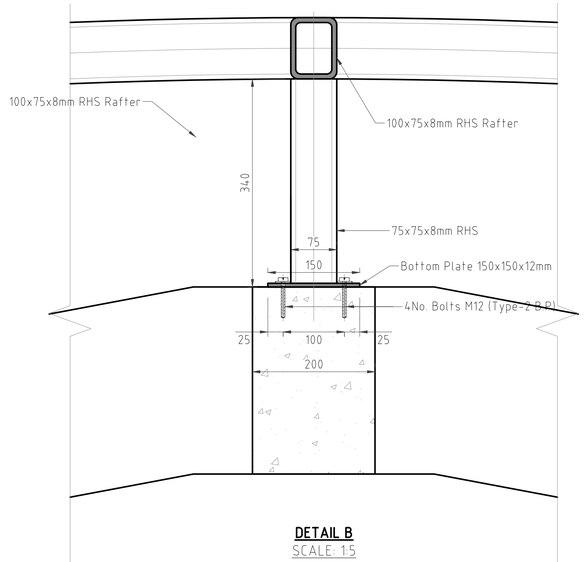

DETAIL B
SCALE: 1:5

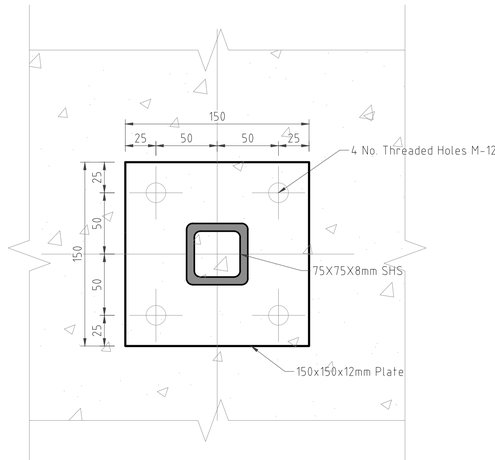

BOTTOM PLATE PLAN
SCALE: 1:2.5

CLIENT:

KENYA NATIONAL HIGHWAY AUTHORITY
Barabara Plaza,
Off Airport South Road,
P. O. Box, 49712 - 00100,
NAIROBI.

KENYA URBAN ROADS AUTHORITY
Barabara Plaza,
Off Airport South Road,
P. O. Box, 49712 - 00100,
NAIROBI.

FINANCIER:

THE WORLD BANK

PROJECT:

HORN OF AFRICA GATEWAY DEVELOPMENT PROJECT (HOAGDP): -

Consultancy Services for the Design and Works Supervision for the Proposed Extension of Meru Bypass.

CONTRACT NO:

KeNHA/RD/CS/D/4205/2024

CONSULTANT:

One Padmore Place 6th Floor,
George Padmore Road,
P. O. Box, 76672 - 00508,
NAIROBI.

DESIGN DETAILS

Action	Name	Date
Designed By:	LO	AUG 2025
Drawn By:	W.O	AUG 2025
Checked By:	S.I	AUG 2025
Approved By:	S.O	AUG 2025

DRAWING REVISIONS

No.	Revision Details	Reviewed	Initials	Date	Approved
		By			
		Checked			
		By			
		Checked			
		By			
		Checked			
		By			
		Checked			
		By			
		Checked			

DRAWING TITLE:

RAMP ROOF LAYOUT AND DETAILS

DRAWING SCALE:

AS SHOWN

DRAWING NO:

TYP - FB1-025

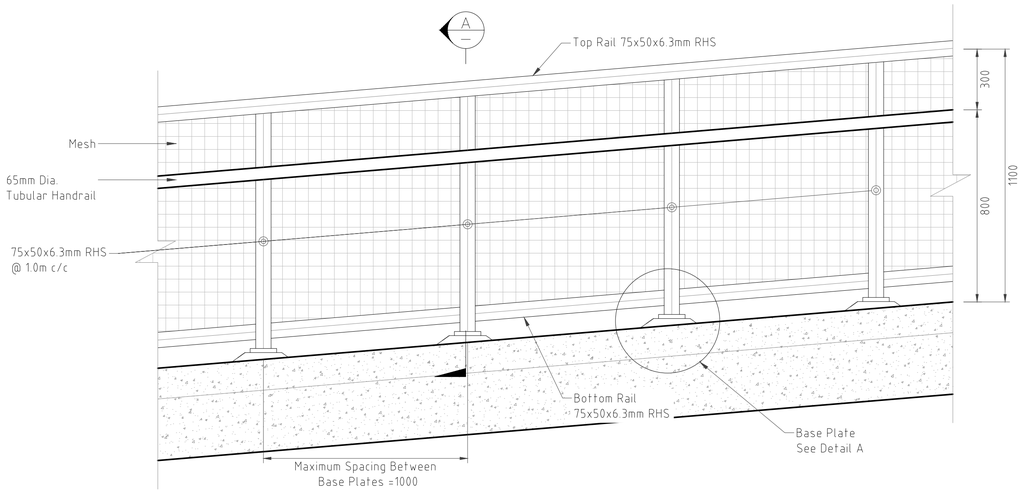

STEEL RAILING TYPE-2
SCALE 1:15

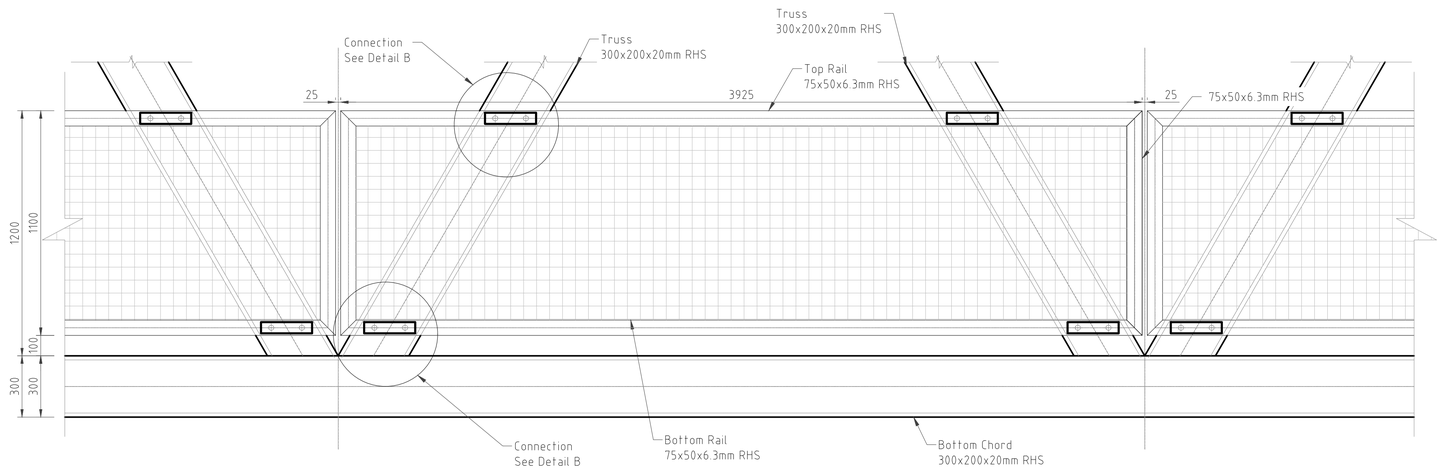

STEEL RAILING TYPE-1
SCALE 1:15

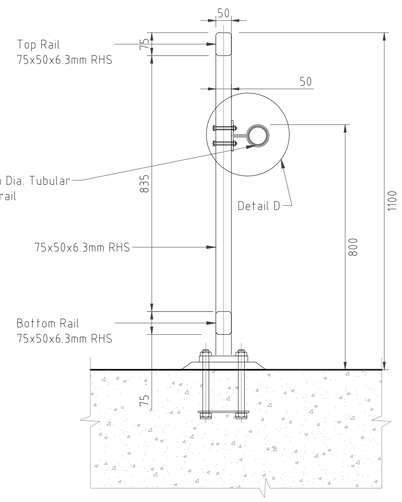

SECTION A-A
SCALE 1:10

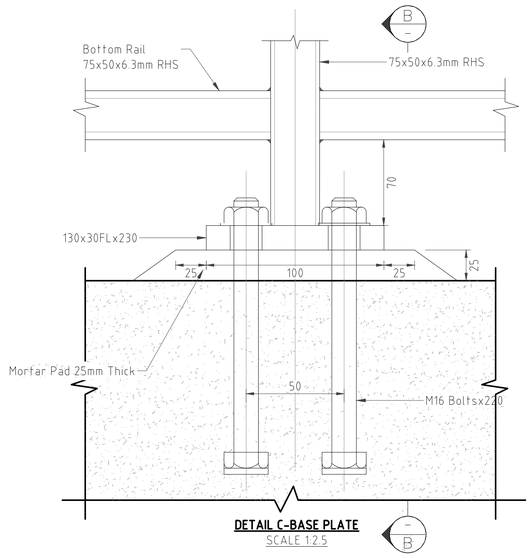

DETAIL C-BASE PLATE
SCALE 1:2.5

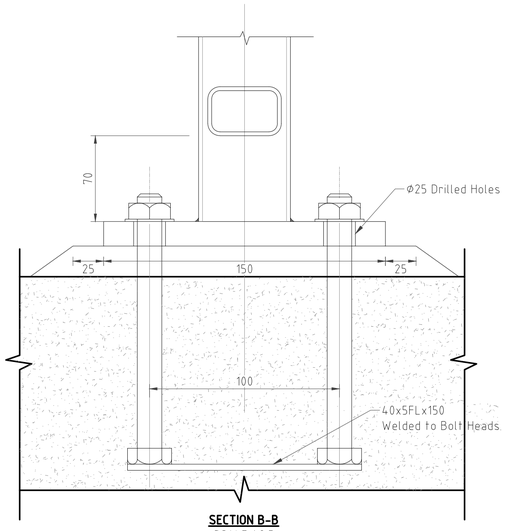

SECTION B-B
SCALE 1:2.5

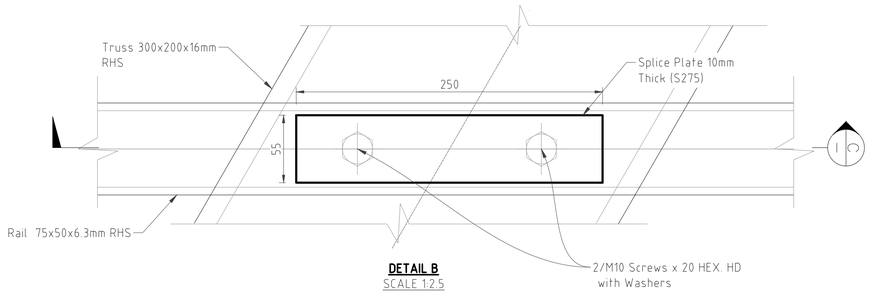

DETAIL B
SCALE 1:2.5

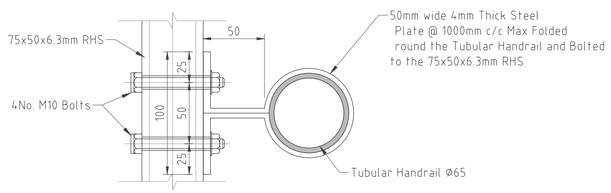

DETAIL C: HANDRAIL ANCHORAGE
SCALE 1:2.5

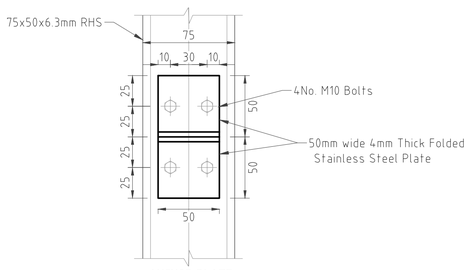

ANCHOR PLATE
SIDE ELEVATION
SCALE 1:2.5

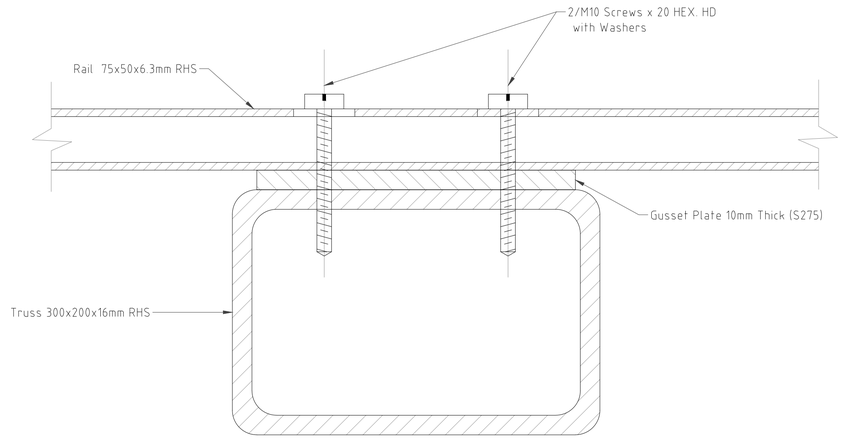

SECTION C
SCALE 1:2.5

CLIENT:

KENYA NATIONAL HIGHWAY AUTHORITY
Barabara Plaza,
Off Airport South Road,
P. O. Box, 49712 - 00100,
NAIROBI.

KENYA URBAN ROADS AUTHORITY
Barabara Plaza,
Off Airport South Road,
P. O. Box, 49712 - 00100,
NAIROBI.

FINANCIER:

THE WORLD BANK

PROJECT:

HORN OF AFRICA GATEWAY DEVELOPMENT PROJECT (HOAGDP): -

Consultancy Services for the Design and Works Supervision for the Proposed Extension of Meru Bypass.

CONTRACT NO:

KeNHA/RD/CS/D/4205/2024

CONSULTANT:

One Padmore Place 6th Floor,
George Padmore Road,
P. O. Box, 76672 - 00508,
NAIROBI.

DESIGN DETAILS		
Action	**Name**	**Date**
Designed By:	LO	AUG 2025
Drawn By:	W.O	AUG 2025
Checked By:	S.I	AUG 2025
Approved By:	S.O	AUG 2025

DRAWING REVISIONS					
No.	Revision Details	Reviewed	Initials	Date	Approved
		By			
		Checked			
		By			
		Checked			
		By			
		Checked			
		By			
		Checked			
		By			
		Checked			

DRAWING TITLE:

STEEL HANDRAILING DETAILS

DRAWING SCALE:

AS SHOWN

DRAWING NO:

TYP - FB1-026

KAAGA BOYS FOOTBRIDGE

No.	DRAWING TITLE	DRAWING NUMBER
1	LIST OF DRAWINGS	TYP-FB2-001
2	GENERAL NOTES	TYP-FB2-002
3	GENERAL NOTES	TYP-FB2-003
4	KEY PLAN	TYP-FB2-004
5	FOUNDATION LAYOUT AND SETTING OUT DATA	TYP-FB2-005
6	FOOT BRIDGE LAYOUT PLAN AND LONGITUDINAL ELEVATION	TYP-FB2-006
7	DECK LAYOUT PLANS	TYP-FB2-007
8	BOLTED SPLICE CONNECTIONS	TYP-FB2-008
9	DECK PANEL-1, PANEL-2 AND PANEL-3 DETAILS	TYP-FB2-009
10	DECK CORSS SECTION AND PANEL-4 & PANEL-5 DETAILS	TYP-FB2-010
11	DECK PANELS CONNECTION DETAILS	TYP-FB2-011
12	DECK SLAB DETAILS	TYP-FB2-012
13	DECK ROOF DETAILS	TYP-FB2-013
14	DECK ROOF PANELS DETAILS	TYP-FB2-014
15	PIER HEAD DETAILS	TYP-FB2-015
16	BEARINGS DETAILS	TYP-FB2-016
17	BEARINGS DETAILS	TYP-FB2-017
18	COLUMNS ELEVATIONS	TYP-FB2-018
19	COLUMNS ELEVATIONS	TYP-FB2-019
20	COLUMN-01 AND COLUMN-02 REINFORMENT DETAILS	TYP-FB2-020
21	PIER-1 AND PIER-2 REINFORCEMENT DETAILS	TYP-FB2-021
22	PIER HEAD REINFORCEMENT DETAILS	TYP-FB2-022
23	BEAMS AND RAMP SLAB REINFORCEMENT DETAILS	TYP-FB2-023
24	RAMP ROOF SLAB LAYOUT PLAN AND REINFORCEMENT DETAILS	TYP-FB2-024
25	RAMP ROOF LAYOUT AND DETAILS	TYP-FB2-025
26	STEEL HANDRAILING DETAILS	TYP-FB2-026

CLIENT:

KENYA NATIONAL HIGHWAY AUTHORITY
Barabara Plaza,
Off Airport South Road,
P. O. Box, 49712 - 00100,
NAIROBI.

KENYA URBAN ROADS AUTHORITY
Barabara Plaza,
Off Airport South Road,
P. O. Box, 49712 - 00100,
NAIROBI.

FINANCIER:

THE WORLD BANK

PROJECT:

HORN OF AFRICA GATEWAY DEVELOPMENT PROJECT (HOAGDP): -

Consultancy Services for the Design and Works Supervision for the Proposed Extension of Meru Bypass.

CONTRACT NO:

KeNHA/RD/CS/D/4205/2024

CONSULTANT:

egis

One Padmore Place 6th Floor,
George Padmore Road,
P. O. Box, 76672 - 00508,
NAIROBI.

DESIGN DETAILS

Action	Name	Date
Designed By:	I.O	AUG 2025
Drawn By:	W.O	AUG 2025
Checked By:	S.I	AUG 2025
Approved By:	S.O	AUG 2025

DRAWING REVISIONS

No.	Revision Details	Reviewed	Initials	Date	Approved
		By			
		Checked			
		By			
		Checked			
		By			
		Checked			
		By			
		Checked			
		By			
		Checked			

DRAWING TITLE:

LIST OF DRAWINGS

DRAWING SCALE:

AS SHOWN

DRAWING NO:

TYP - FB2-001

DIMENSIONS AND ELEVATIONS

- Elevations and coordinates in meters
- Dimensions in millimeters and angles in degrees, unless otherwise noted on drawings

DESIGN SPECIFICATIONS

- EN 1990: Eurocode 0, Basis of Structural Design.
- Planning and Building Regulations 2009. Volumes 2 and 4 National Planning and Building Authority Republic of Kenya

EUROCODE 1
- BS-EN 1991-1: Eurocode 1, Action on Structures, Part 1-1: General Actions, Densities, Self-weight, Imposed Loads for Buildings
- BS-EN 1992-2: Eurocode 1, Actions on Structures Part 2: Traffic Loads on Bridges
- NA to BS-EN 1991-2: 2003 UK National Annex to Eurocode 1: Actions on Structures Part 2: Traffic Loads on Bridges
- BS-EN 1991-1-4: Eurocode 1, Actions on Structures Part 1-4: General Actions, Wind Actions
- BS-EN 1991-1-5: Eurocode 1, Actions on Structures Part 1-5: General Actions, Thermal Actions

EUROCODE 2
- BS-EN 1992-1-1: Eurocode 2, Design of Concrete Structures Part 1-1: General Rules and Rules for Buildings
- BS-EN 1992-1-2: Eurocode 2, Design of Concrete Structures Part 1-2: Concrete Bridges, Design and Detailing Rules

EUROCODE 3
- BS-EN 1993-1-1: Eurocode 3, Design of Steel Structures, Part 1-1: General Rules for Buildings
- BS-EN 1993-1-5: Eurocode 3, Design of Steel Structures, Part 1-5: Plated Structural Elements
- BS-EN 1993-1-8: Eurocode 3, Design of Steel Structures, Part 1-8: Design of Joints
- BS-EN 1993-2: Eurocode 3, Design of Steel Structures Part 2: Steel Bridges

EUROCODE 4
- BS-EN 1994-1-1: Eurocode 4, Design of Composite Steel and Concrete Structures, Part 1-1: General Rules and Rules for Buildings.
- BS-EN 1994-2: Eurocode 4, Design of Composite Steel and Concrete Structures, Part 2: General Rules and Rules for Bridges.

EUROCODE 8
- BS-EN 1998-1: Eurocode 8, Design of Structures for Earthquakes Resistance. Part 1: General Rules, Seismic Actions and Rules for Bridges.
- BS-EN 1998-2: Eurocode 8, Design of Structures for Earthquakes Resistance. Part 2: Bridges.

BS EN 12056-3
- Gravity Drainage Systems Inside Buildings. Part 3: Roof Drainage, Layout and Calculations

DESIGN METHODOLOGY

- Partial Safety, Factor method using service and ultimate limit states

DESIGN LOADINGS

PERMANENT LOADS
- BS-EN 1991-1: Eurocode 1, Action on Structures, Part 1-1: General Actions, Densities, Self-weight, Imposed Loads for Buildings
  - Self Weight of Steel: 77 kN/m^3
  - Self Weight of Reinforced Concrete: 25 kN/m^3
  - Self Weight of Railing: 0.5 kN/m^3

CONCRETE SHRINKAGE AND CONCRETE CREEP
- BS-EN 1992-1-1: Eurocode 2, Design of Concrete Structures Part 1-1: General Rules and Rules for Buildings
- BS-EN 1992-1-2: Eurocode 2, Design of Concrete Structures Part 1-1: Concrete Bridges, Design and Detailing Rules

PEDESTRIAN LOADS
- BS-EN 1992-2: Eurocode 1, Actions on Structures Part 2: Traffic Loads on Bridges
- Uniformly distributed load, Q_{fk}, shall be defined and applied only in the unfavorable parts of the influence surface, longitudinally and transversely. The characteristic value of the load shall be Q_{fk}: 5 kN/m^3
- A concentrated load Q_{fwk}. The characteristic value of this load shall be Q_{fwk}: 10 kN acting on a square surface of sides 0.10 m. This load shall be taken into account only for local effects.
- Horizontal force Q_{flk} shall be taken into account, equal to the 10 per cent of the total load corresponding to the uniformly distributed load Q_{fk}.
- Horizontal force is considered acting along the bridge deck axis at the pavement level and acting simultaneously with the corresponding vertical load, and in no case with the concentrated load Q_{fwk}.

WIND LOAD
- The fundamental value of the basic wind velocity for Meru is Vb,o: 28 m/s.

THERMAL ACTION
- BS-EN 1991-1-5: Eurocode 1, Actions on Structures Part 1-5: General Actions, Thermal Actions
- To assess the overall range of the uniform footbridge temperature, shall be considered a minimum shade air temperature T_{min}: 5°C and a maximum shade air temperature T_{max}: 30°C.

EARTHQUAKE LOAD
- BS-EN 1998-1: Eurocode 8, Design of Structures for Earthquakes Resistance. Part 1: General Rules, Seismic Actions and Rules for Bridges.
- BS-EN 1998-2: Eurocode 8, Design of Structures for Earthquakes Resistance. Part 2: Bridges.

MANUFACTURING

- All main steelwork shall be executed in accordance with execution class EXC 3 (BS-EN 1090-2).
- Tube handrailing, steel landings and steel steps shall be executed in accordance with execution Class EXC 2 IBS-EN 1090-2).

CONSTITUENT STEEL MATERIALS

STRUCTURAL STEEL

STEEL QUALITY	STANDARD	Minimum Yield Strength (MPa)	Tensile Strength MPa	REMARKS
S355	BS-EN 10025-2	355	470 to 630	The grade and quality of each structural steel component is specified on the drawings
	BS-EN 10025-3			
S275	BS-EN 10025-2	275	410 to 560	

TUBE HANDRAILING

STEEL QUALITY	STANDARD	Minimum Yield Strength (MPa)	Tensile Strength MPa	REMARKS
S235 JR	BS-EN 10025-2	235	360 to 510	Handrail, posts, bottom rail and baluster. Technical delivery conditions and tolerances, dimensions and sectional properties BS-EN 10219-1/10219-2
S275	BS-EN 10025-2	275	410 to 560	Toe base plates

STEEL DECKING (Non-Composite)

- Steel decking formwork shall be formed from hot dip galvanized and steel coil, quality S250GD +Z 275 according to BS-EN 10346. Visible areas coated with powder paint layer of pure polyster resin.

STEEL ROOFING

- Profiled steel roofing flashings, gutters and accesories shall be formed from hot dip galvanized and steel coil, quality S250GD +Z 275 according to BS-EN 10346 and top/bottom sides organic coated with polyester in accordance with BS-EN 10169.

WELDING

- All welded joints shall be factory welded in a controlled environment, and welds will be applied by skilled welders using specialist equipment to achieve highest possible standards, as specified in relevant code of practice. No welding of structural connections will be carried out on site, unless special exception for a specific part/spot on a structural component is requested and approval granted by the Engineer.
- Welding shall be undertaken in accordance with the requirement of the relevant part of BS-EN ISO 3834 Part 2, unless noted otherwise on drawings.
- All welding consumables shall conform to the requirements to BS-EN 13479 and the appropriate product standard as listed in BS-EN 1090-2.
- The type of welding consumables shall be appropriate to the welding process, the material to be welded and the welding process.
- Weld symbol shall be in accordance with BS-EN 2553.
- The throat (A) is the shortest distance from the joint root to the hypotenuse (straight line drawn toe to toe) of the largest right triangle that can be drawn within the fillet weld cross section.
- Workmanship, techniques, qualifications and inspection shall be in accordance with BS-EN 1090-2.
- All weld shall be fillet weld type, 8mm nominal throat thickness and continuous, unless noted otherwise on the drawings.
- Acceptance criteria for welding execution according to BS-EN 5817 Quality Level B. The acceptance criteria for excessive throat thickness" (5214) shall be quality Level D.

STUD SHEAR CONNECTORS

- Stud shear connectors shall be conformed to requirement of BS-EN 13918.

SHEAR CONNECTOR	STANDARD	Minimum Yield Strength (MPa)	Tensile Strength MPa	Minimum Elongation %
Type SD1	BS-EN 13918	350	450	15%

- Stud welding shall be carried in accordance with BS-EN ISO 14555.

STRUCTURAL BOLTS, NUTS AND WASHERS

- All structural bolting assemblies to be made with the following types:

TYPE	STANDARD	QUALITY	STANDARD	ASSEMBLIES
Structural Bolting for preloading	BS-EN 14399 Type HV	10.9	BS-EN 898-1	Bolt BS-EN 14399-4 Nut BS-EN 14399-4 Washer BS-EN 14399-5 Washer BS-EN 14399-6 Washer BS-EN 14399-9
Structural Bolting for non-preloading	BS-EN 15048	5.8/6.8	BS-EN 898-1	Bolt BS-EN 4017 Nut BS-EN 4032 Washer BS-EN 7089

- Bolts, nuts, plain and chamfered washers shall be hot dip galvanized according to BS-EN ISO 10684
- Direct tension indicator washers shall be sheradized according with BS-EN 13811 or BS-EN ISO 17668.

FOUNDATION BOLTS

- Foundation bolts shall conform to the following requirements:

FOUNDATION BOLT TYPE	Minimum Yield Strength (MPa)	Tensile Strength MPa	REMARKS
Thread bars	500	550	Left hand thread on full length

- Type and quality of anchor nuts, lock nuts, anchor plates and washers shall be in accordance with quality of thread bars.

STRUCTURAL BEARINGS

- Structural elastomeric bearings shall be designed in accordance with BS-EN 1337-1 and manufacturing according to BS-EN 1337-3.
- EXPANSION JOINT
- Expansion joints in steel deck shall be preformed elastomeric comression seal type.
- Elastomeric material shall be EPDM (synthetic rubber) with a minimum durometer hardness 60 (AST D 2240).

SURFACE TREATMENT

- The surface treatment for footbridge steelwork shall be C5M H (high durability) according to BS-EN 12944-6. Unless otherwise noted in drawings, type of paint, dry film thickness ranges shall be as specified in the following table:

COAT	MATERIAL	Minimum Dry Film Thickness µ	REMARKS
Surface preparation	Blast Cleaning GRADE 21/2		According to BS-EN ISO 8501-1
First Coat-Blast Primer	Two Component universal epoxy paint	120 µ	Hempadur Quattro 17634 or Equivalent
2nd Coat -Undercoat	Two Component universal epoxy paint	120 µ	Hempadur Quattro 17634 or Equivalent
3rd Coat -Gloss Finish	Two Component glossy acrylic polyurethane top coat	80 µ	Hempathane HS 55610 or equivalent

- Coatings or coating systems applied on faying surfaces, splices and fill plates of steelwork for preloading bolting assemblies shall satisfy requirements for the specified slip friction coefficient of 0.4 (see table 8.4 table 18 EN 1090-2). The first coating shall be alkali-zinc silicate paint with a thickness of 50mm to 80mm, hempel gavosil or equivalent.
- The surface treatment with alkali-zinc silicate paint shall be applied to both side of splice and fill plates.
- Alkali-zinc paint at connected elements shall be extended 50mm from the splice plate edge as a primer layer and painted with the three layers of the main surface treatment.
- All closed and non-accessible sections shall be painted at workshop with an epoxy-aluminum paint 70-80 µm dry film thickness.
- Steel tubes handrailing shall be galvanized according to BS-EN 1461 and externally coated with a powder painting layer of polyester resin.
- Step and steel landing shall be galvanized according to BS-EN 1461.

BOLT ASSEMBLY- PRELOADED BOLTS
TYPE-1 P.B

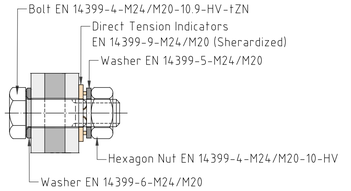

NOTE:
- Washers used under heads of preloaded bolts shall be chamfered according to EN 14399-6 and positioned with the chamfer towards the bolts heads.
- Washers according to EN 14399-5 shall only be used under nuts

BOLT ASSEMBLY- PRELOADED BOLTS
TYPE-2 P.B

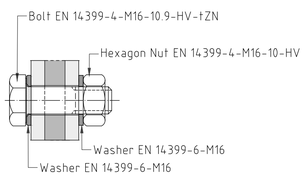

NOTE:
- Washers used under heads of preloaded bolts shall be chamfered according to EN 14399-6 and positioned with the chamfer towards the bolts heads.

BOLT ASSEMBLY- PRELOADED BOLTS
TYPE-3 P.B

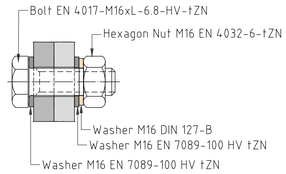

NOTE:
- Each bolt assembly with non-preloaded bolts shall be brought at least to a sung-tight condition, with special care being given to avoid over tightening.

BOLT ASSEMBLY- PRELOADED BOLTS
TYPE-4 P.B

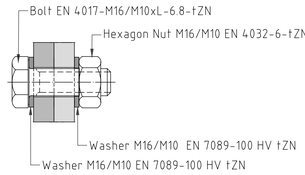

NOTE:
- Each bolt assembly with non-preloaded bolts shall be brought at least to a sung-tight condition, with special care being given to avoid over tightening.

BOLT ASSEMBLY- PRELOADED BOLTS
TYPE-5 P.B

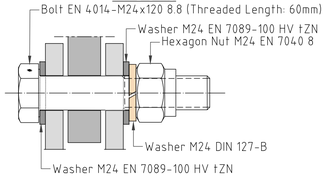

NOTE:
- Each bolt assembly with non-preloaded bolts shall be brought at least to a sung-tight condition, with special care being given to avoid over tightening.

BOLT ASSEMBLY- PRELOADED BOLTS
TYPE-6 P.B

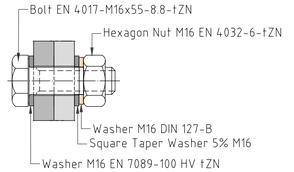

NOTE:
- Each bolt assembly with non-preloaded bolts shall be brought at least to a sung-tight condition, with special care being given to avoid over tightening.

BOLT ASSEMBLY- PRELOADED BOLTS
TYPE-7 P.B

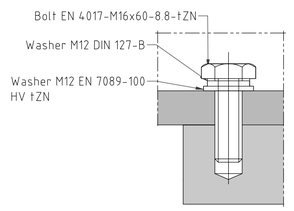

WELDING:
- Symbolic representation on drawing according to BS-EN 22553
- Quality requirement for welding BS-EN ISO 5817 Quality Level B.
- Welding general tolerance BS-EN ISO 13920.

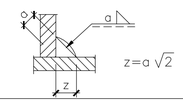

CLIENT:

KENYA NATIONAL HIGHWAY AUTHORITY
Barabara Plaza,
Off Airport South Road,
P. O. Box, 49712 - 00100,
NAIROBI.

KENYA URBAN ROADS AUTHORITY
Barabara Plaza,
Off Airport South Road,
P. O. Box, 49712 - 00100,
NAIROBI.

FINANCIER:

THE WORLD BANK

PROJECT:

HORN OF AFRICA GATEWAY DEVELOPMENT PROJECT (HOAGDP): -

Consultancy Services for the Design and Works Supervision for the Proposed Extension of Meru Bypass.

CONTRACT NO:

KeNHA/RD/CS/D/4205/2024

CONSULTANT:

egis

One Padmore Place 6th Floor,
George Padmore Road,
P. O. Box, 76672 - 00508,
NAIROBI.

DESIGN DETAILS

Action	Name	Date
Designed By:	I.O	AUG 2025
Drawn By:	W.O	AUG 2025
Checked By:	S.I	AUG 2025
Approved By:	S.O	AUG 2025

DRAWING REVISIONS

No.	Revision Details	Reviewed	Initials	Date	Approved
		By			
		Checked			
		By			
		Checked			
		By			
		Checked			
		By			
		Checked			
		By			
		Checked			

DRAWING TITLE:

GENERAL NOTES

DRAWING SCALE:

AS SHOWN

DRAWING NO:

TYP - FB2-002

SETTING OUT

- The setting out details and levels of all structures shall be checked and approved by the Engineer prior to any construction work.

FOUNDATION LEVELS

- Any foundation levels shown on the drawings are tentative and all structures will be required to be founded at a level and in a stratum to be determined on site by the Engineer.

EXCAVATION

- All excavations shall be excavated to the lines and depth directed by the Engineer. All excavations to be approved by the Engineer prior to any construction work including laying of blinding concrete.

FILLING

- Filling for structures shall be selected material, directed by the Engineer brought up in horizontal layers not exceeding 150mm compacted thickness.
- Each layer shall be thoroughly mixed, watered, dried as necessary, and compacted to a minimum dry density of 95% MDD (AASHTO T99).

CONCRETE

- The following concrete grades shall be used (maximum size of aggregate in mm indicated in bracket).
  Grade 15 (20) - Blinding
  Grade 30 (20) - Foundations, Pier Columns, Pier Cap, Deck Slab, Ramp Slab, Ramp Beams, Columns, Roof Beams & Roof Slab

- Concrete shall not be placed before the Engineer's approval of the formwork and reinforcement has been given.
- All concrete shall be thoroughly compacted by internal vibration to produce a dense uniform mass without segregation and without voids.

REINFORCEMENTS

- High Tensile ribbed steel bars (grade 500) shall comply with B.S. 4461.
- The following nomenclature is used on the reinforcement drawings :- 25T12-38-250 B.F where :-

25	= Number of bars	N.F	= Near Face
T	= Square twisted bars	L.F.	= Lower face
250	=Bar spacing	A.B.S.	= Alternate Bars Staggered
R	= Mild steel bars.	I.F.	= Inner face.
12	= Diameter of bars in mm	O.F.	= Outer face.
38	= Bar mark	A.W	= Alternate with
B1	= Bottom bars, first layer	F.F.	= Far Face
B.F	= Both faces.	L.L.	= Lower layer.
U.F	= Upper face	U.L.	= Upper layer.
B2	= Bottom bars, second layer	T1	= Top bars, first layer
T2	= Top bars, second layer		

- All steel bending dimensions to be in accordance with B.S. 4466 as shown below.
  Min. diameter of bend radius = D
  Diameter of reinforcement bar = d
  For d = 6,8,10,12 and 16 mm, D = 6xd
  For d = 20 and 25 mm, D = 8xd

- Lap length of all bars shall be 50 times diameter of the smaller bar lapped.
- All bars to be bent cold and no bars shall be straightened or bent again after having been bent.
- No splice shall be made in reinforcement except where shown on drawings or as agreed with the Engineer before concrete is placed.

BAR CUTTING AND BENDING

- Total Bar Cutting Lengths are specified in multiples of 25mm and shown in meters (m).
- r indicates the minimum value in Table 3 of BS 4466.
- The dimensions in parenthesis are the free dimensions
- To avoid separate equations for each steel grade and bending radius, simplified Total Length formulae are used for shape Codes 61, 77, 79 and 82. These formulae are necessarily appropriate
- The Length formula is approximate and when bending angles exceed 45º, the length should be calculated more accurately allowing for the difference between the specified overall dimensions and the true length measured along the central axis of the bar or wire. When the bending angle approaches 90º, it is preferable to specify Shape Code 99 with a fully dimensional sketch (It shall be shown on the reinforcement detailed drawing).
- Bar spacings stipulated are the maximum allowable as the space available may dictate, the bars may need to be redistributed evenly over an area
- The minimum former radii, bend anf hook allowances are as follows:

d	r	n	h
6	18	100	100
8	24	100	100
10	30	100	110
12	36	100	140
16	48	100	180
20	60	110	220
25	100	180	350
32	128	230	450
40	160	280	560
50	200	350	700

CONSTRUCTION JOINT

- The position and form of any construction joint shall be as shown on drawings or as agreed with the Engineer before concrete is placed.

CONCRETE COVER TO REINFORCEMENT

- The concrete cover to reinforcement bars shall be as follows if not otherwise shown :-
  Superstructures = 35 mm
  Substructures and bases = 50 mm.

FORMWORK

- All formwork shall be approved by the Engineer.
- All concrete sharp corners to have 25x25 mm chamfers.

PROTECTION AND CURING OF CONCRETE

- The concrete surface shall immediately after completion be protected from the harmful effects of sun, drying, winds, rains, running water and shocks. It shall be kept damp for at least 5 days as follows :-
- Vertical faces and underside horizontal surfaces: The formwork shall be left in place, and sprayed with water regularly.
- Top/Exposed Horizontal surfaces: They shall be kept damp through a well soaked layer of sand

CLIENT:

KENYA NATIONAL HIGHWAY AUTHORITY
Barabara Plaza,
Off Airport South Road,
P. O. Box, 49712 - 00100,
NAIROBI.

KENYA URBAN ROADS AUTHORITY
Barabara Plaza,
Off Airport South Road,
P. O. Box, 49712 - 00100,
NAIROBI.

FINANCIER:

THE WORLD BANK

PROJECT:

HORN OF AFRICA GATEWAY DEVELOPMENT PROJECT (HOAGDP): -

Consultancy Services for the Design and Works Supervision for the Proposed Extension of Meru Bypass.

CONTRACT NO:

KeNHA/RD/CS/D/4205/2024

CONSULTANT:

One Padmore Place 6th Floor,
George Padmore Road,
P. O. Box, 76672 - 00508,
NAIROBI.

DESIGN DETAILS

Action	Name	Date
Designed By:	I.O	AUG 2025
Drawn By:	W.O	AUG 2025
Checked By:	S.I	AUG 2025
Approved By:	S.O	AUG 2025

DRAWING REVISIONS

No.	Revision Details	Reviewed	Initials	Date	Approved
		By			
		Checked			
		By			
		Checked			
		By			
		Checked			
		By			
		Checked			
		By			
		Checked			

DRAWING TITLE:

GENERAL NOTES

DRAWING SCALE:

AS SHOWN

DRAWING NO:

TYP - FB2-003

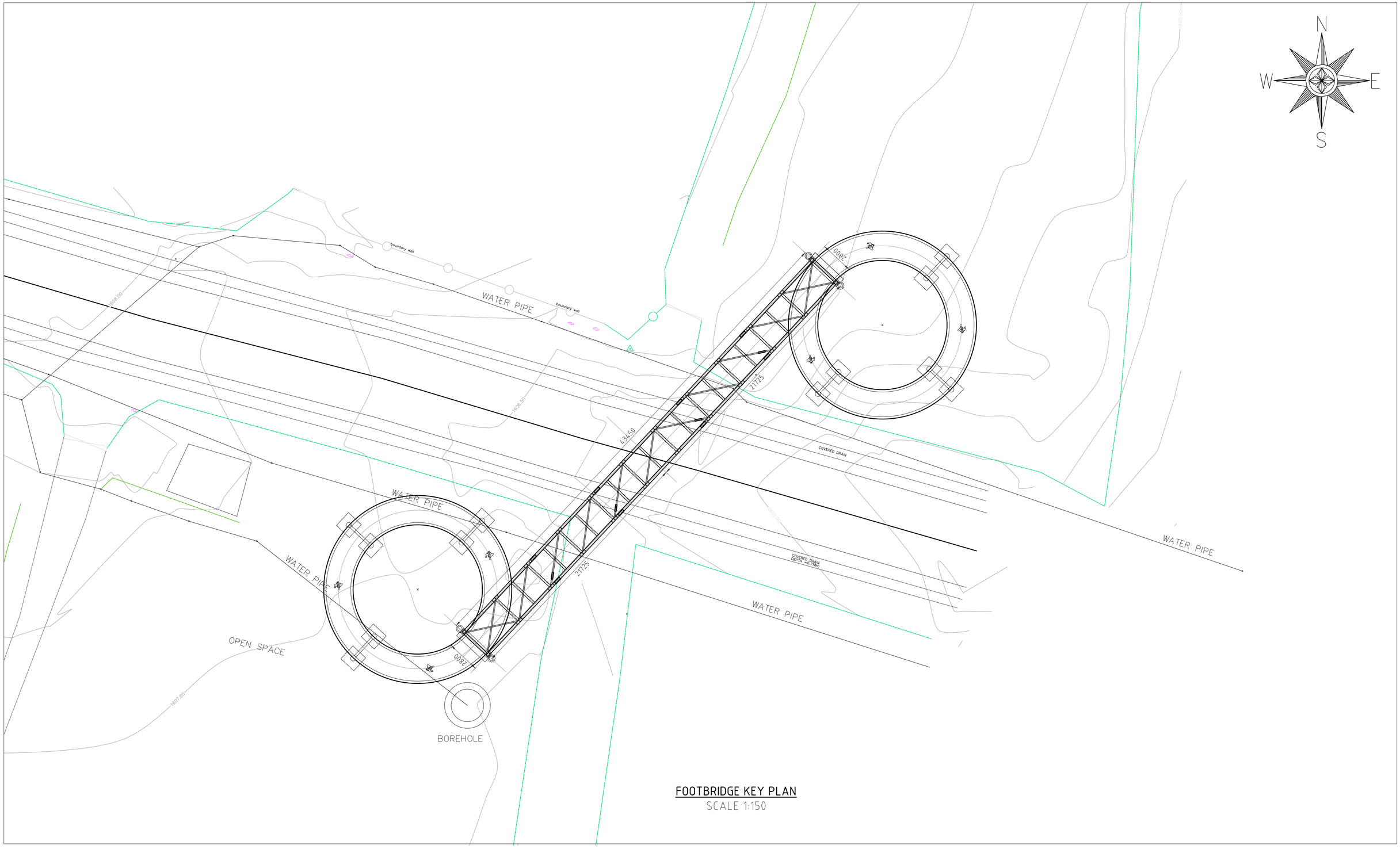

FOOTBRIDGE KEY PLAN

SCALE 1:150

CLIENT:

KENYA NATIONAL HIGHWAY AUTHORITY
Barabara Plaza,
Off Airport South Road,
P. O. Box, 49712 - 00100,
NAIROBI.

KENYA URBAN ROADS AUTHORITY
Barabara Plaza,
Off Airport South Road,
P. O. Box, 49712 - 00100,
NAIROBI.

FINANCIER:

THE WORLD BANK

PROJECT:

HORN OF AFRICA GATEWAY DEVELOPMENT PROJECT (HOAGDP): -

Consultancy Services for the Design and Works Supervision for the Proposed Extension of Meru Bypass.

CONTRACT NO:

KeNHA/RD/CS/D/4205/2024

CONSULTANT:

One Padmore Place 6th Floor,
George Padmore Road,
P. O. Box, 76672 - 00508,
NAIROBI.

DESIGN DETAILS

Action	Name	Date
Designed By:	I.O	AUG 2025
Drawn By:	W.O	AUG 2025
Checked By:	S.I	AUG 2025
Approved By:	S.O	AUG 2025

DRAWING REVISIONS

No.	Revision Details	Reviewed	Initials	Date	Approved
		By			
		Checked			
		By			
		Checked			
		By			
		Checked			
		By			
		Checked			
		By			
		Checked			

DRAWING TITLE:

FOOTBRIDGE LOCATION PLAN

DRAWING SCALE:

AS SHOWN

DRAWING NO:

TYP - FB2-004

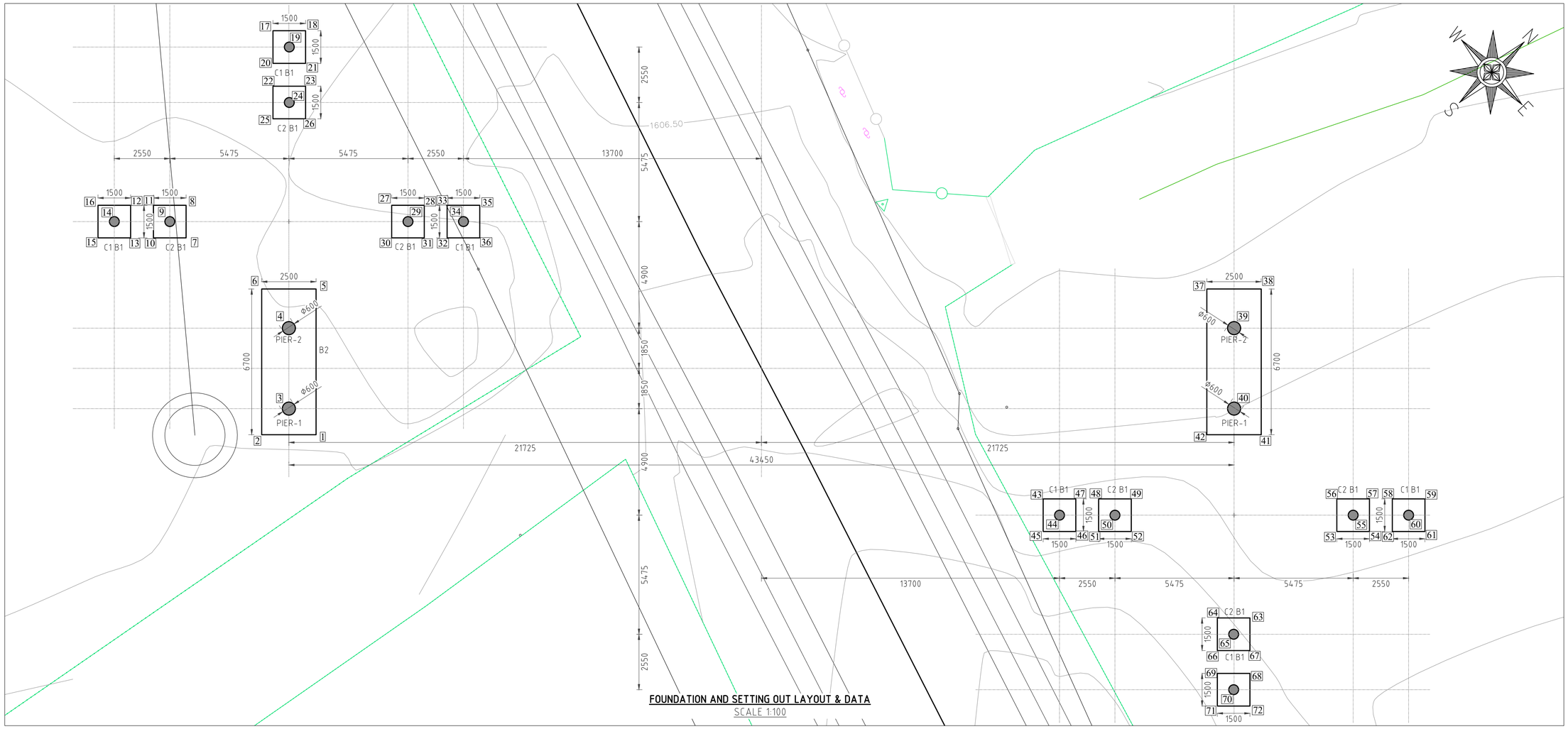

SETTING OUT DATA: COORDINATES (Arc 1960)

POINT NO.	EASTING (m): X - Coordinates in (m)	NORTHING (m): Y - Coordinates in (m)	POINT NO.	EASTING (m): X - Coordinates in (m)	NORTHING (m): Y - Coordinates in (m)	POINT NO.	EASTING (m): X - Coordinates in (m)	NORTHING (m): Y - Coordinates in (m)	POINT NO.	EASTING (m): X - Coordinates in (m)	NORTHING (m): Y - Coordinates in (m)	POINT NO.	EASTING (m): X - Coordinates in (m)	NORTHING (m): Y - Coordinates in (m)	POINT NO.	EASTING (m): X - Coordinates in (m)	NORTHING (m): Y - Coordinates in (m)
1	350380.152	7313.891	13	350367.719	7313.849	25	350368.192	7322.368	37	350403.237	7348.371	49	350407.91	7339.241	61	350418.228	7348.074
2	350378.444	7312.066	14	350366.659	7313.814	26	350369.217	7323.463	38	350404.945	7350.197	50	350407.945	7338.181	62	350417.203	7346.979
3	350378.422	7313.798	15	350366.694	7312.754	27	350374.822	7323.637	39	350405.405	7348.054	51	350407.98	7337.121	63	350415.635	7339.485
4	350375.720	7316.326	16	350365.599	7313.779	28	350375.847	7324.732	40	350408.107	7345.527	52	350409.005	7338.216	64	350414.611	7338.390
5	350375.260	7318.469	17	350365.234	7325.135	29	350375.882	7323.672	41	350409.838	7345.619	53	350415.461	7345.117	65	350415.671	7338.425
6	350373.552	7316.643	18	350366.259	7326.230	30	350375.918	7322.612	42	350408.130	7343.794	54	350416.486	7346.212	66	350415.706	7337.365
7	350369.461	7315.711	19	350366.294	7325.170	31	350376.943	7323.707	43	350405.143	7336.284	55	350415.426	7346.177	67	350416.731	7338.460
8	350368.366	7316.736	20	350366.330	7324.110	32	350377.660	7324.474	44	350406.203	7336.319	56	350414.366	7346.142	68	350417.498	7337.743
9	350368.401	7315.676	21	350367.355	7325.205	33	350376.565	7325.499	45	350406.238	7335.259	57	350415.391	7347.237	69	350416.473	7336.647
10	350368.437	7314.616	22	350367.096	7323.393	34	350377.625	7325.534	46	350407.263	7336.354	58	350416.108	7348.004	70	350417.533	7336.683
11	350367.341	7315.641	23	350368.121	7324.488	35	350377.589	7326.594	47	350406.167	7337.379	59	350417.133	7349.099	71	350417.568	7335.623
12	350366.624	7314.874	24	350368.144	7323.415	36	350378.685	7325.569	48	350406.885	7338.146	60	350417.168	7348.039	72	350418.593	7336.718

CLIENT:

KENYA NATIONAL HIGHWAY AUTHORITY
Barabara Plaza,
Off Airport South Road,
P. O. Box, 49712 - 00100,
NAIROBI.

KENYA URBAN ROADS AUTHORITY
Barabara Plaza,
Off Airport South Road,
P. O. Box, 49712 - 00100,
NAIROBI.

FINANCIER:

THE WORLD BANK

PROJECT:

HORN OF AFRICA GATEWAY DEVELOPMENT PROJECT (HOAGDP): -

Consultancy Services for the Design and Works Supervision for the Proposed Extension of Meru Bypass.

CONTRACT NO:

KeNHA/RD/CS/D/4205/2024

CONSULTANT:

egis

One Padmore Place 6th Floor,
George Padmore Road,
P. O. Box, 76672 - 00508,
NAIROBI.

DESIGN DETAILS

Action	Name	Date
Designed By:	I.O	AUG 2025
Drawn By:	W.O	AUG 2025
Checked By:	S.I	AUG 2025
Approved By:	S.O	AUG 2025

DRAWING REVISIONS

No.	Revision Details	Reviewed	Initials	Date	Approved
		By			
		Checked			
		By			
		Checked			
		By			
		Checked			
		By			
		Checked			
		By			
		Checked			

DRAWING TITLE:

FOOTBRIDGE FOUNDATION LAYOUT AND SETTING OUT DATA

DRAWING SCALE:

AS SHOWN

DRAWING NO:

TYP - FB2-005

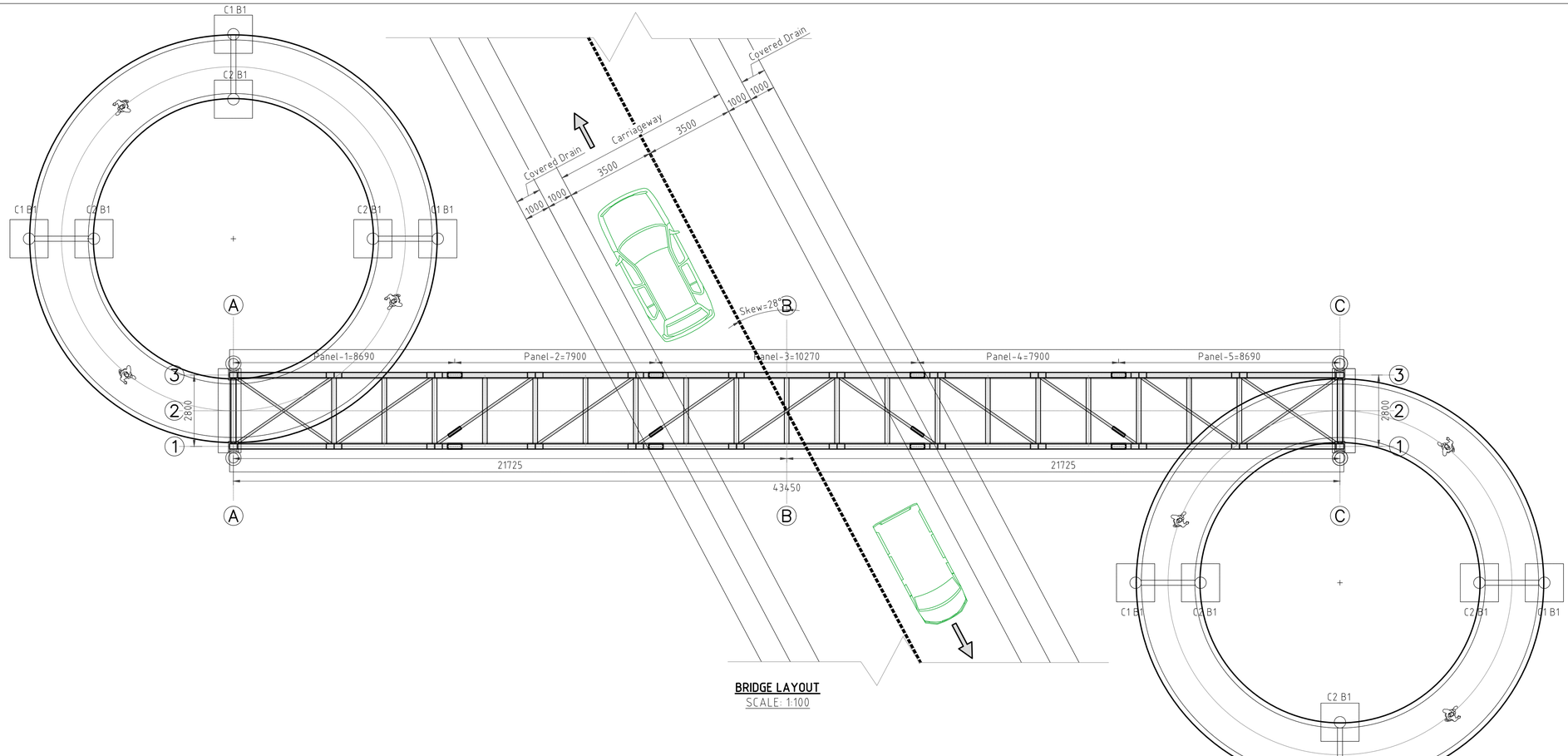

BRIDGE LAYOUT
SCALE: 1:100

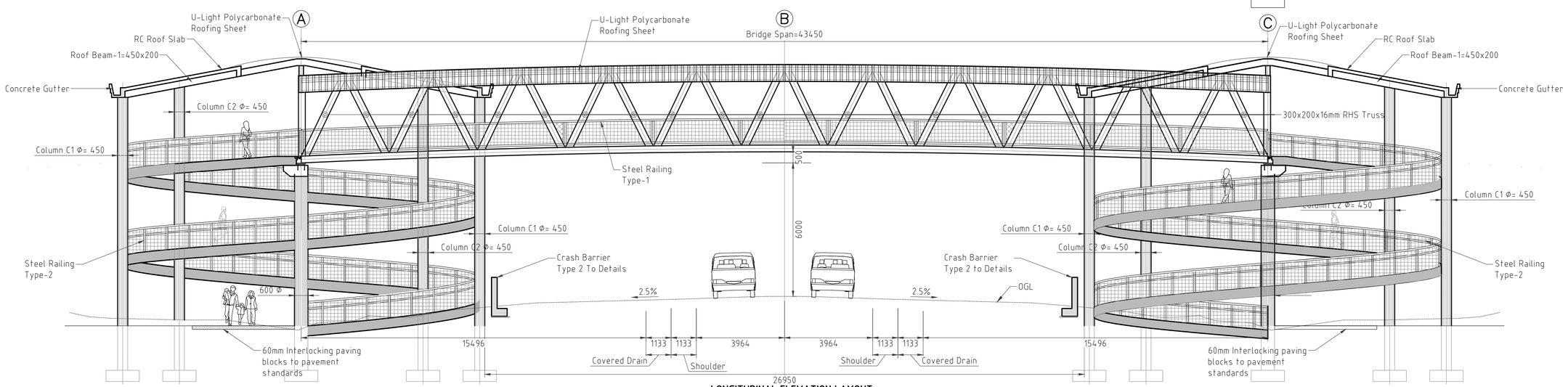

LONGITUDINAL ELEVATION LAYOUT
SCALE 1:100

CLIENT:

Kenya National Highways Authority
Quality Highways, Better Connections

KENYA NATIONAL HIGHWAY AUTHORITY
Barabara Plaza,
Off Airport South Road,
P. O. Box, 49712 - 00100,
NAIROBI.

KENYA URBAN ROADS AUTHORITY
KURA

KENYA URBAN ROADS AUTHORITY
Barabara Plaza,
Off Airport South Road,
P. O. Box, 49712 - 00100,
NAIROBI.

FINANCIER:

THE WORLD BANK

PROJECT:

HORN OF AFRICA GATEWAY DEVELOPMENT PROJECT (HOAGDP): -

Consultancy Services for the Design and Works Supervision for the Proposed Extension of Meru Bypass.

CONTRACT NO:

KeNHA/RD/CS/D/4205/2024

CONSULTANT:

egis

One Padmore Place 6th Floor,
George Padmore Road,
P. O. Box, 76672 - 00508,
NAIROBI.

DESIGN DETAILS

Action	Name	Date
Designed By:	I.O	AUG 2025
Drawn By:	W.O	AUG 2025
Checked By:	S.I	AUG 2025
Approved By:	S.O	AUG 2025

DRAWING REVISIONS

No.	Revision Details	Reviewed	Initials	Date	Approved
		By			
		Checked			
		By			
		Checked			
		By			
		Checked			
		By			
		Checked			
		By			
		Checked			

DRAWING TITLE:

FOOTBRIDGE LAYOUT PLAN AND LONGITUDINAL ELEVATION

DRAWING SCALE:

AS SHOWN

DRAWING NO:

TYP - FB2-006

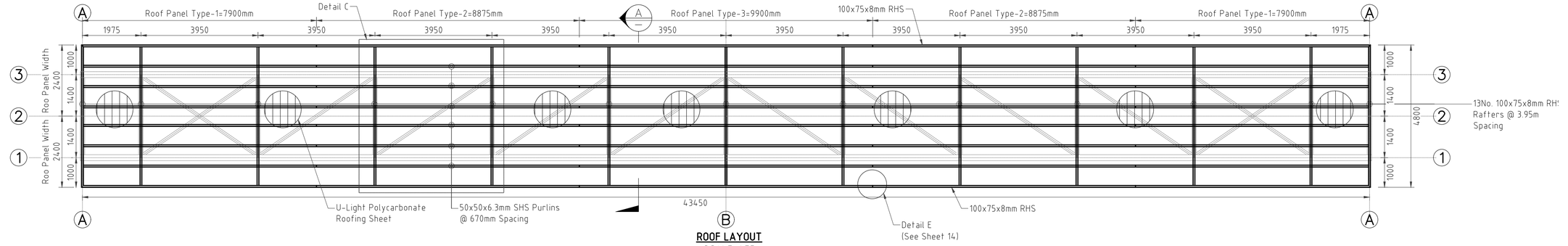

ROOF LAYOUT
SCALE: 1:75

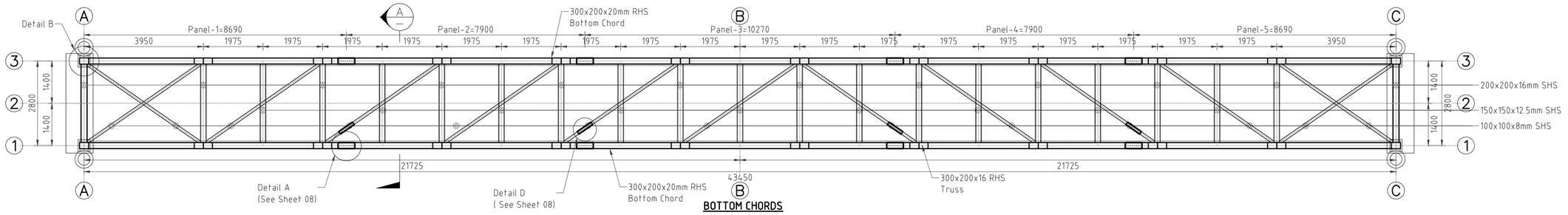

BOTTOM CHORDS
SCALE: 1:75

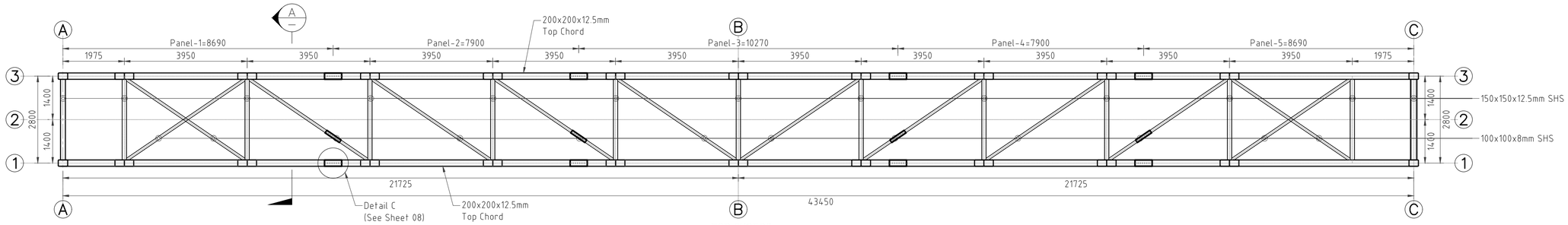

TOP CHORDS
SCALE: 1:75

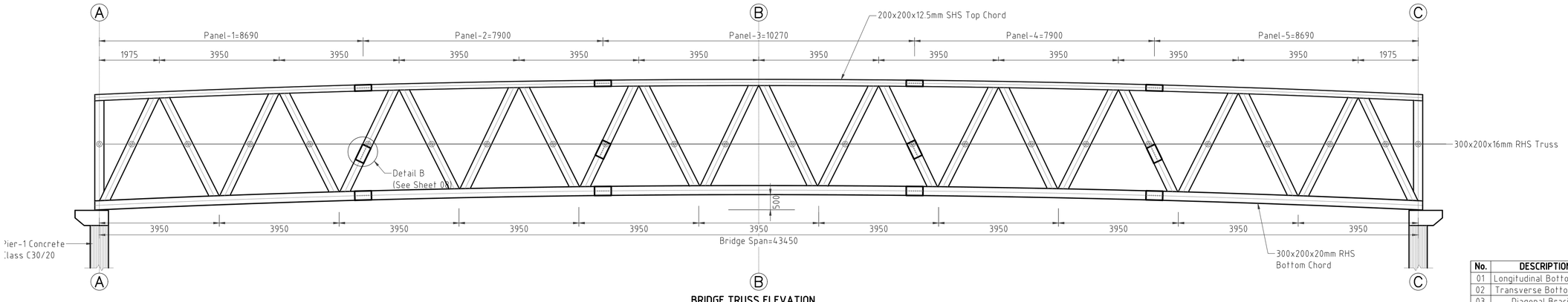

BRIDGE TRUSS ELEVATION
SCALE: 1:75

No.	DESCRIPTION	SIZE
01	Longitudinal Bottom Chord	300x200x20mm RHS
02	Transverse Bottom Chord	200x200x16mm SHS
03	Diagonal Bracings	100x100x8mm SHS
04	Longitudinal Top Chord	200x200x12.5mm SHS
05	Transverse Top Chord	150x150x12.5mm SHS
06	Truss	300x200x18mm RHS

CLIENT:
KENYA NATIONAL HIGHWAY AUTHORITY
Barabara Plaza,
Off Airport South Road,
P. O. Box, 49712 - 00100,
NAIROBI.

KENYA URBAN ROADS AUTHORITY
Barabara Plaza,
Off Airport South Road,
P. O. Box, 49712 - 00100,
NAIROBI.

FINANCIER:
THE WORLD BANK

PROJECT:
HORN OF AFRICA GATEWAY DEVELOPMENT PROJECT (HOAGDP): -

Consultancy Services for the Design and Works Supervision for the Proposed Extension of Meru Bypass.

CONTRACT NO:
KeNHA/RD/CS/D/4205/2024

CONSULTANT:
egis
One Padmore Place 6th Floor,
George Padmore Road,
P. O. Box, 76672 - 00508,
NAIROBI.

DESIGN DETAILS

Action	Name	Date
Designed By:	LO	AUG 2025
Drawn By:	W.O	AUG 2025
Checked By:	S.I	AUG 2025
Approved By:	S.O	AUG 2025

DRAWING REVISIONS

No.	Revision Details	Reviewed	Initials	Date	Approved
		By			
		Checked			
		By			
		Checked			
		By			
		Checked			
		By			
		Checked			
		By			
		Checked			

DRAWING TITLE:
DECK LAYOUT PLANS

DRAWING SCALE:
AS SHOWN

DRAWING NO:
TYP - FB2-007

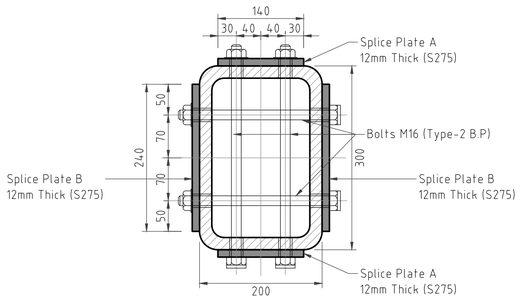

DETAIL A: BOLTED SPLICE CONNECTION-1

SCALE: 1:5

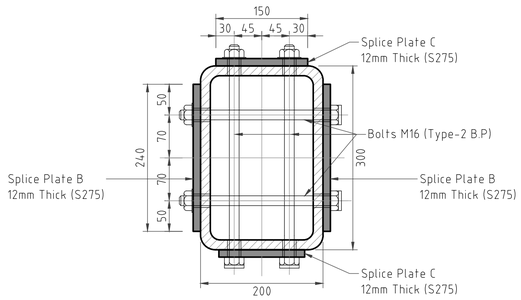

DETAIL B: BOLTED SPLICE CONNECTION-2

SCALE: 1:5

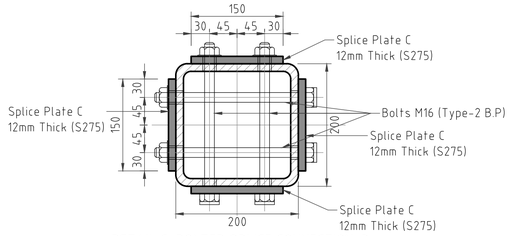

DETAIL C: BOLTED SPLICE CONNECTION-3

SCALE: 1:5

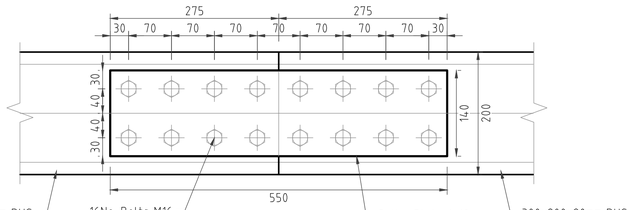

SPLICE PLATE A

SCALE: 1:5

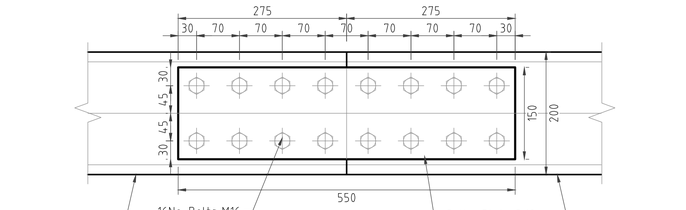

SPLICE PLATE C

SCALE: 1:5

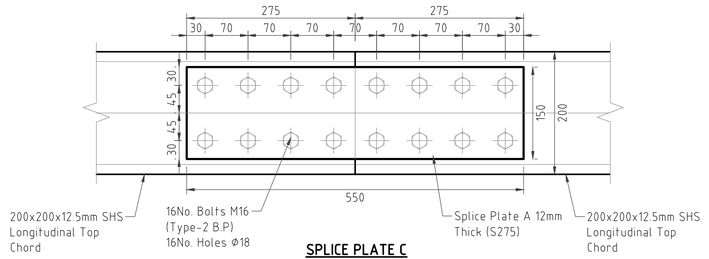

SPLICE PLATE C

SCALE: 1:5

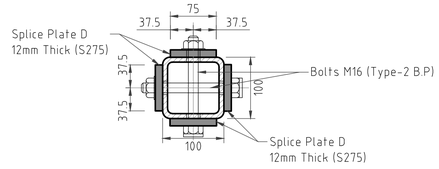

DETAIL D: BOLTED SPLICE CONNECTION-4

SCALE: 1:5

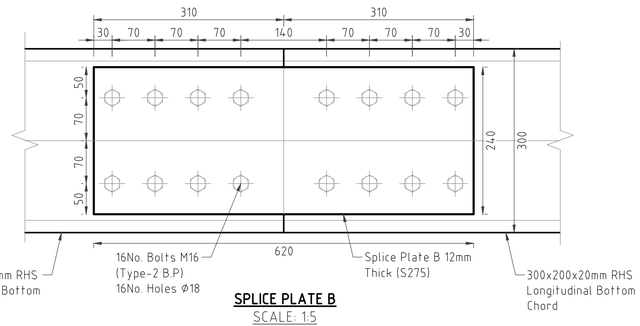

SPLICE PLATE B

SCALE: 1:5

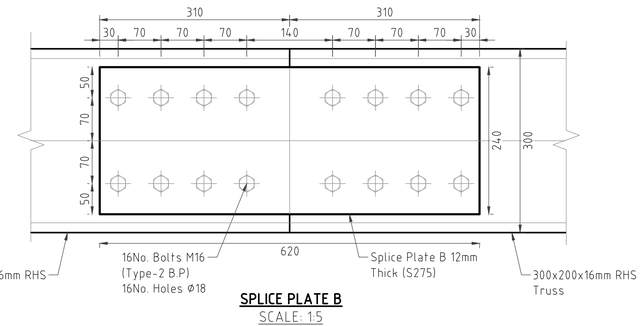

SPLICE PLATE B

SCALE: 1:5

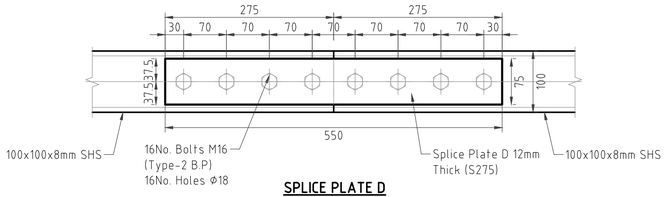

SPLICE PLATE D

SCALE: 1:5

BOLT ASSEMBLY- PRELOADED BOLTS
TYPE-2 P.B

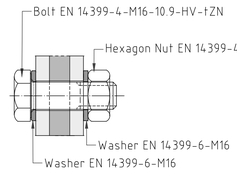

NOTE:

- Washers used under heads of preloaded bolts shall be chamfered according to EN 14399-6 and positioned with the chamfer towards the bolts heads.

CLIENT:

KENYA NATIONAL HIGHWAY AUTHORITY
Barabara Plaza,
Off Airport South Road,
P. O. Box, 49712 - 00100,
NAIROBI.

KENYA URBAN ROADS AUTHORITY
Barabara Plaza,
Off Airport South Road,
P. O. Box, 49712 - 00100,
NAIROBI.

FINANCIER:

THE WORLD BANK

PROJECT:

HORN OF AFRICA GATEWAY DEVELOPMENT PROJECT (HOAGDP): -

Consultancy Services for the Design and Works Supervision for the Proposed Extension of Meru Bypass.

CONTRACT NO:

KeNHA/RD/CS/D/4205/2024

CONSULTANT:

egis

One Padmore Place 6th Floor,
George Padmore Road,
P. O. Box, 76672 - 00508,
NAIROBI.

DESIGN DETAILS		
Action	Name	Date
Designed By:	I.O	AUG 2025
Drawn By:	W.O	AUG 2025
Checked By:	S.I	AUG 2025
Approved By:	S.O	AUG 2025

DRAWING REVISIONS					
No.	Revision Details	Reviewed	Initials	Date	Approved
		By			
		Checked			
		By			
		Checked			
		By			
		Checked			
		By			
		Checked			
		By			
		Checked			

DRAWING TITLE:

BOLTED SPLICE CONNECTIONS

DRAWING SCALE:

AS SHOWN

DRAWING NO:

TYP - FB2-008

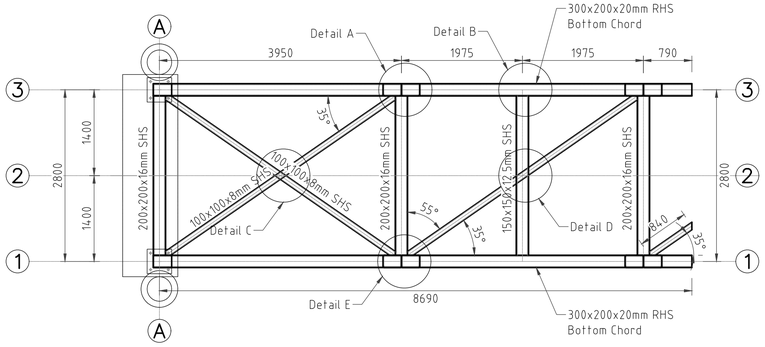

PANEL-1 BOTTOM CHORDS
SCALE: 1:50

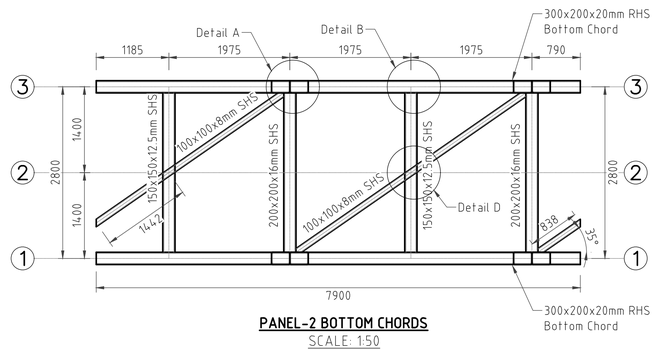

PANEL-2 BOTTOM CHORDS
SCALE: 1:50

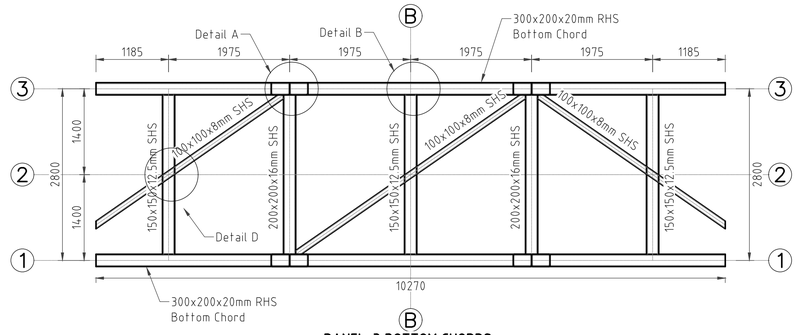

PANEL-3 BOTTOM CHORDS
SCALE: 1:50

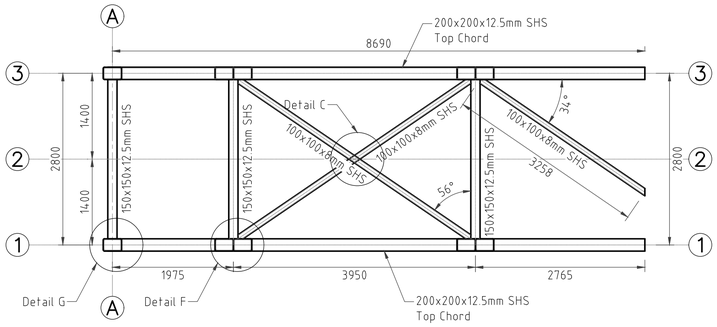

PANEL-1 TOP CHORDS
SCALE: 1:50

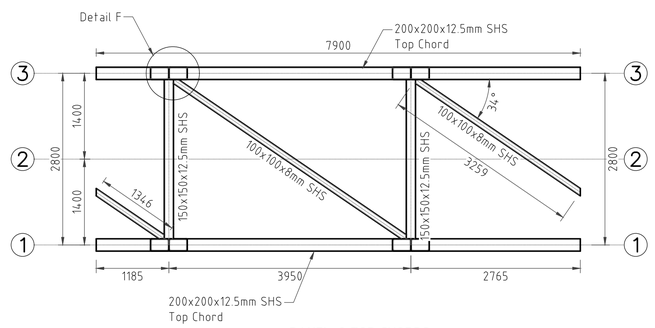

PANEL-2 TOP CHORDS
SCALE: 1:50

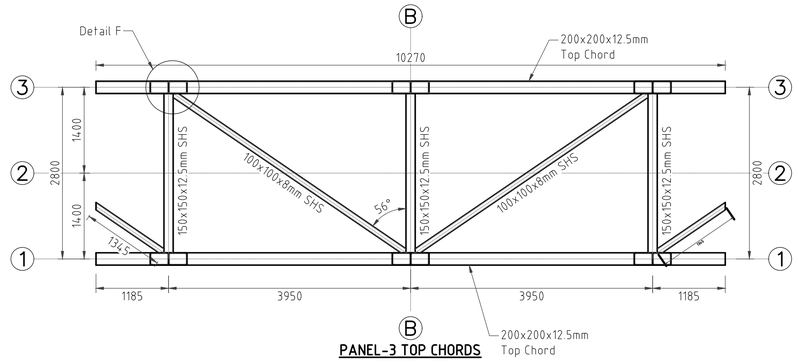

PANEL-3 TOP CHORDS
SCALE: 1:50

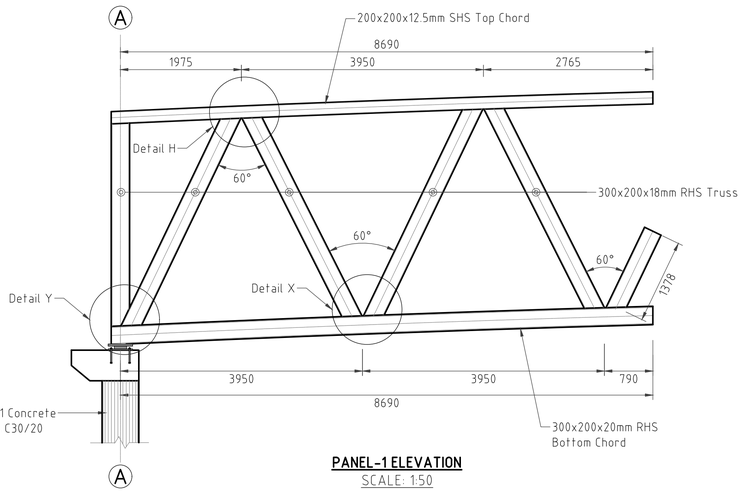

PANEL-1 ELEVATION
SCALE: 1:50

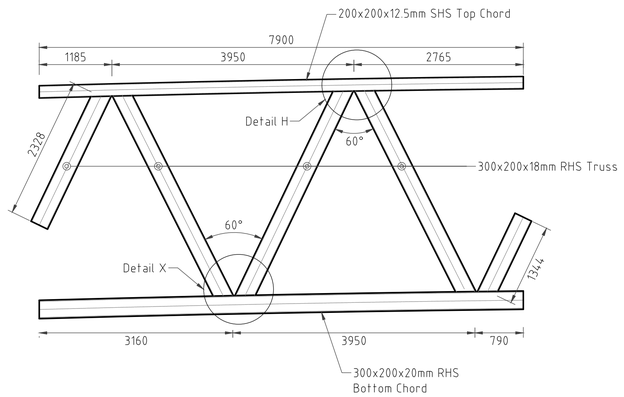

PANEL-2 ELEVATION
SCALE: 1:50

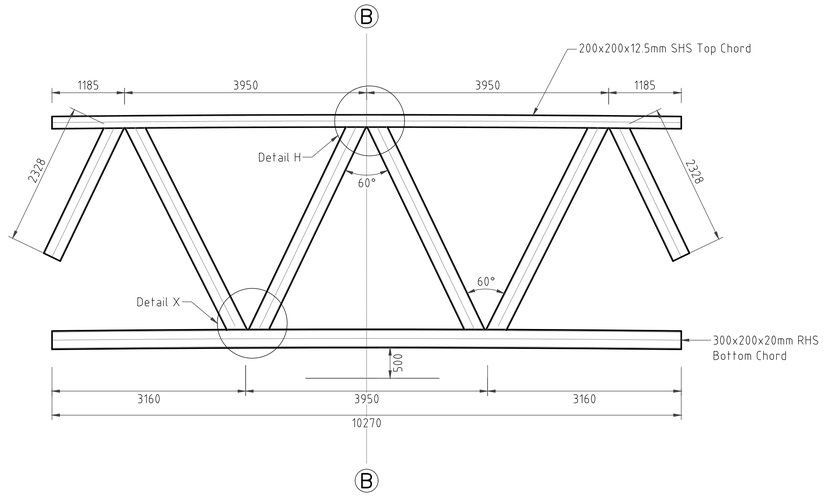

PANEL-3 ELEVATION
SCALE: 1:50

No.	DESCRIPTION	SIZE
01	Longitudinal Bottom Chord	300x200x20mm RHS
02	Transverse Bottom Chord	200x200x16mm SHS
03	Diagonal Bracings	100x100x8mm SHS
04	Longitudinal Top Chord	200x200x12.5mm SHS
05	Transverse Top Chord	150x150x12.5mm SHS
06	Truss	300x200x18mm RHS

CLIENT:
KENYA NATIONAL HIGHWAY AUTHORITY
Barabara Plaza,
Off Airport South Road,
P. O. Box, 49712 - 00100,
NAIROBI.

KENYA URBAN ROADS AUTHORITY
Barabara Plaza,
Off Airport South Road,
P. O. Box, 49712 - 00100,
NAIROBI.

FINANCIER:
THE WORLD BANK

PROJECT:
HORN OF AFRICA GATEWAY DEVELOPMENT PROJECT (HOAGDP): -

Consultancy Services for the Design and Works Supervision for the Proposed Extension of Meru Bypass.

CONTRACT NO:
KeNHA/RD/CS/D/4205/2024

CONSULTANT:
egis
One Padmore Place 6th Floor,
George Padmore Road,
P. O. Box, 76672 - 00508,
NAIROBI.

DESIGN DETAILS

Action	Name	Date
Designed By:	I.O	AUG 2025
Drawn By:	W.O	AUG 2025
Checked By:	S.I	AUG 2025
Approved By:	S.O	AUG 2025

DRAWING REVISIONS

No.	Revision Details	Reviewed	Initials	Date	Approved
		By			
		Checked			
		By			
		Checked			
		By			
		Checked			
		By			
		Checked			
		By			
		Checked			

DRAWING TITLE:
DECK PANEL-1, PANEL-2 AND PANEL-3 DETAILS

DRAWING SCALE:
AS SHOWN

DRAWING NO:
TYP - FB2-009

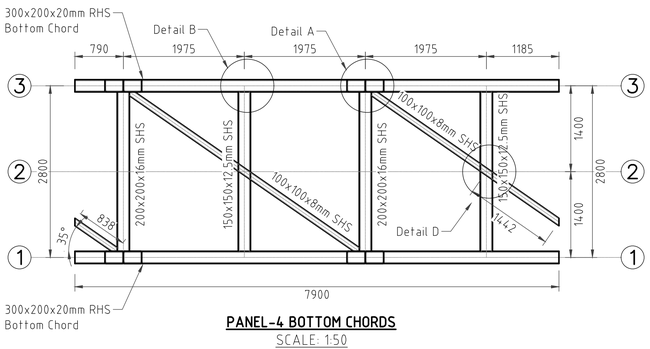

PANEL-4 BOTTOM CHORDS
SCALE: 1:50

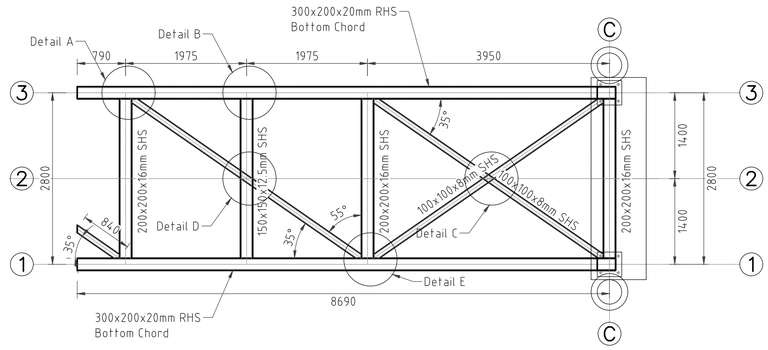

PANEL-5 BOTTOM CHORDS
SCALE: 1:50

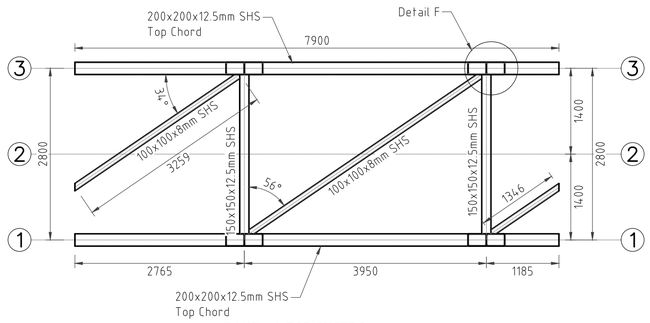

PANEL-4 TOP CHORDS
SCALE: 1:50

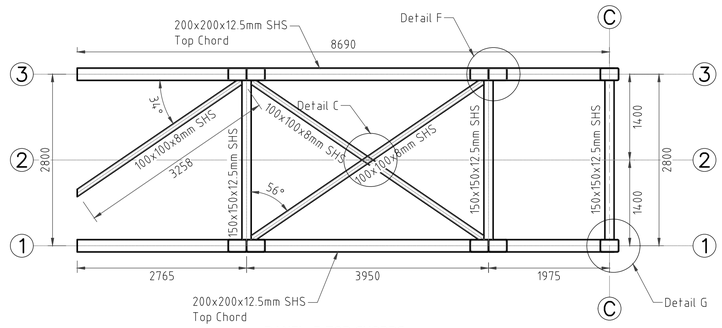

PANEL-5 TOP CHORDS
SCALE: 1:50

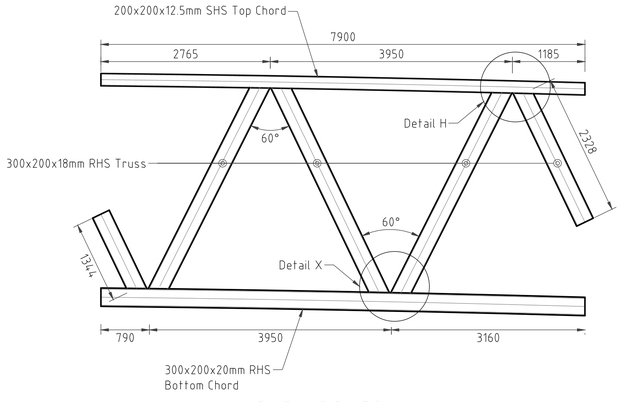

PANEL-4 ELEVATION
SCALE: 1:50

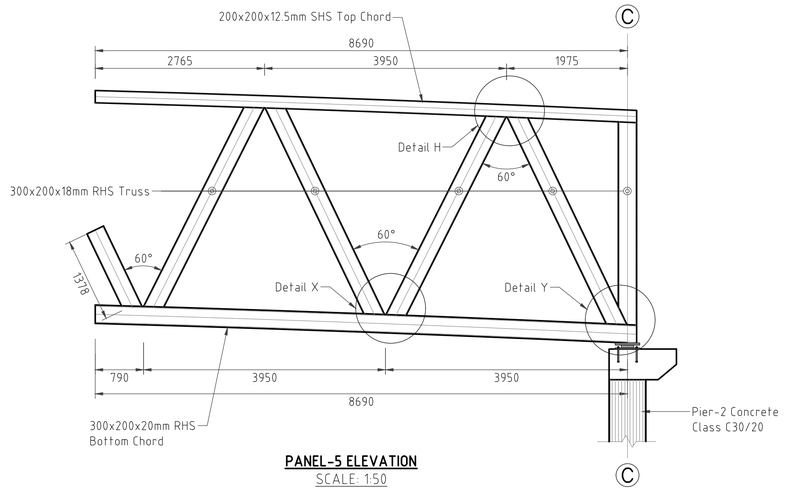

PANEL-5 ELEVATION
SCALE: 1:50

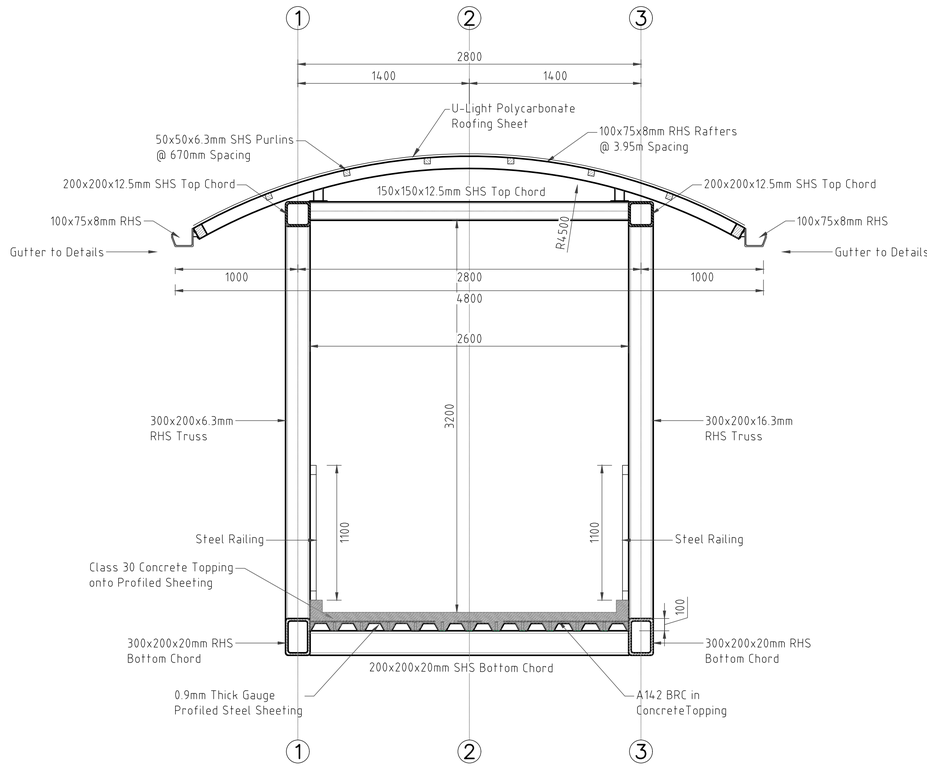

BRIDGE DECK CROSS-SECTION
SCALE: 1:25

No.	DESCRIPTION	SIZE
01	Longitudinal Bottom Chord	300x200x20mm RHS
02	Transverse Bottom Chord	200x200x16mm SHS
03	Diagonal Bracings	100x100x8mm SHS
04	Longitudinal Top Chord	200x200x12.5mm SHS
05	Transverse Top Chord	150x150x12.5mm SHS
06	Truss	300x200x18mm RHS

CLIENT:

KENYA NATIONAL HIGHWAY AUTHORITY
Barabara Plaza,
Off Airport South Road,
P. O. Box, 49712 - 00100,
NAIROBI.

KENYA URBAN ROADS AUTHORITY
Barabara Plaza,
Off Airport South Road,
P. O. Box, 49712 - 00100,
NAIROBI.

FINANCIER:

THE WORLD BANK

PROJECT:

HORN OF AFRICA GATEWAY DEVELOPMENT PROJECT (HOAGDP): -

Consultancy Services for the Design and Works Supervision for the Proposed Extension of Meru Bypass.

CONTRACT NO:

KeNHA/RD/CS/D/4205/2024

CONSULTANT:

egis

One Padmore Place 6th Floor,
George Padmore Road,
P. O. Box, 76672 - 00508,
NAIROBI.

DESIGN DETAILS

Action	Name	Date
Designed By:	I.O	AUG 2025
Drawn By:	W.O	AUG 2025
Checked By:	S.I	AUG 2025
Approved By:	S.O	AUG 2025

DRAWING REVISIONS

No.	Revision Details	Reviewed	Initials	Date	Approved
		By			
		Checked			
		By			
		Checked			
		By			
		Checked			
		By			
		Checked			
		By			
		Checked			

DRAWING TITLE:

DECK CROSS-SECTION AND PANEL-4 & PANEL-5 DETAILS

DRAWING SCALE:

AS SHOWN

DRAWING NO:

TYP - FB2-010

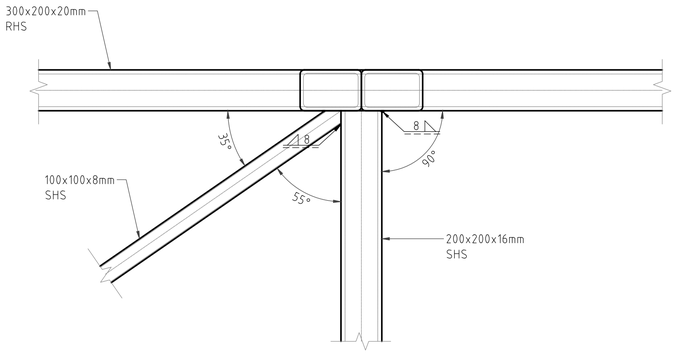

DETAIL A
SCALE: 1:15

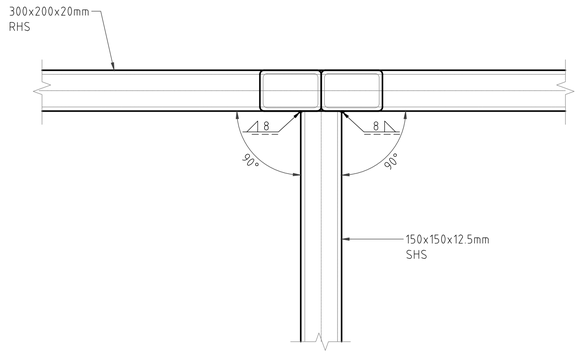

DETAIL B
SCALE: 1:15

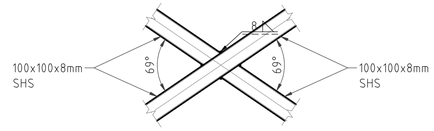

DETAIL C
SCALE: 1:15

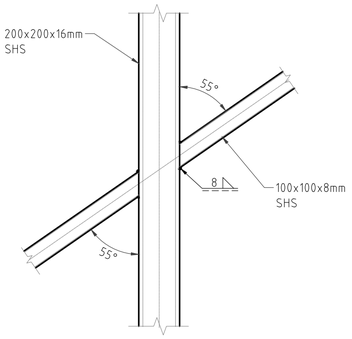

DETAIL D
SCALE: 1:15

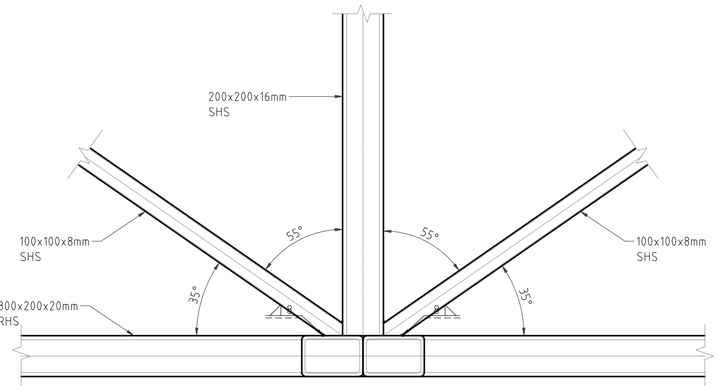

DETAIL E
SCALE: 1:15

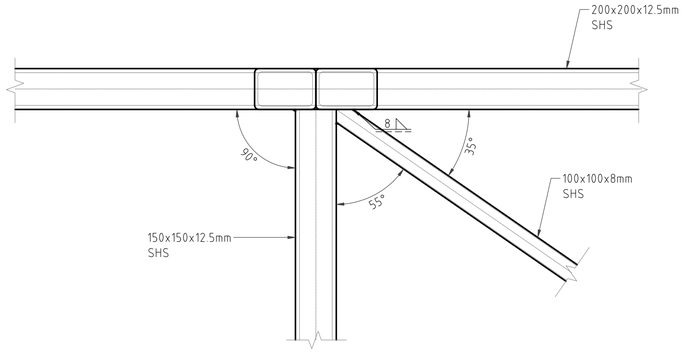

DETAIL F
SCALE: 1:15

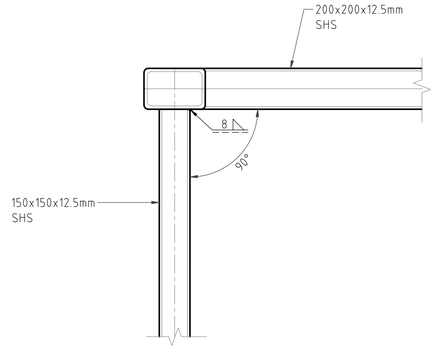

DETAIL G
SCALE: 1:15

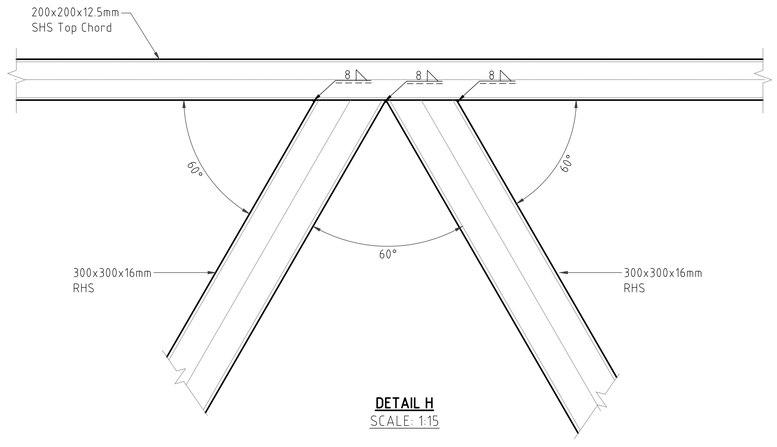

DETAIL H
SCALE: 1:15

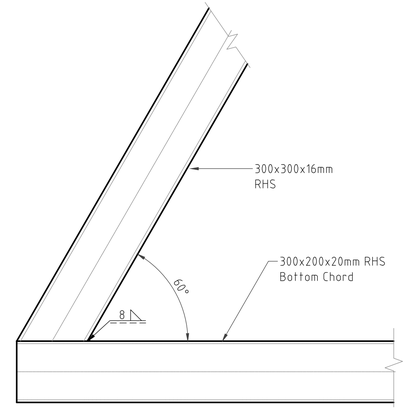

DETAIL X
SCALE: 1:15

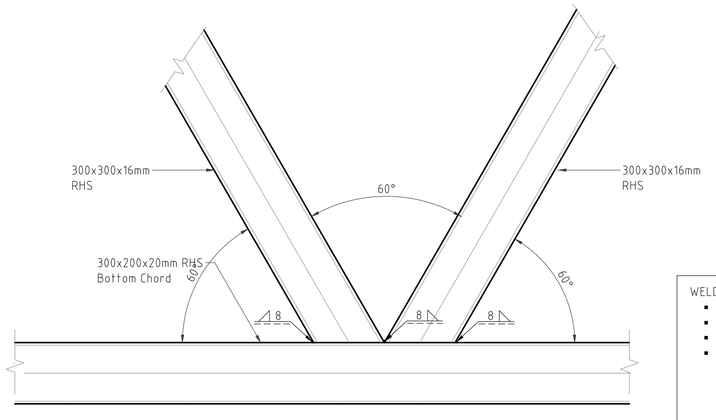

DETAIL Y
SCALE: 1:15

No.	DESCRIPTION	SIZE
01	Longitudinal Bottom Chord	300x200x20mm RHS
02	Transverse Bottom Chord	200x200x16mm SHS
03	Diagonal Bracings	100x100x8mm SHS
04	Longitudinal Top Chord	200x200x12.5mm SHS
05	Transverse Top Chord	150x150x12.5mm SHS
06	Truss	300x200x18mm RHS

WELDING:

- Symbolic representation on drawing according to BS-EN 22553
- Quality requirement for welding UNE-EN ISO 5817 Quality Level B.
- Welding general tolerance BS-EN ISO 13920.
- All welded joints shall be factory welded in a controlled environment, and welds will be applied by skilled welders using specialist equipment to achieve highest possible standards, as specified in relevant code of practice. No welding of structural connections will be carried out on site, unless special exception for a specific part/spot on a structural component is requested and approval granted by the Engineer.

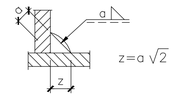

CLIENT:

Kenya National Highways Authority
Quality Highways, Better Connections

KENYA NATIONAL HIGHWAY AUTHORITY
Barabara Plaza,
Off Airport South Road,
P. O. Box, 49712 - 00100,
NAIROBI.

KENYA URBAN ROADS AUTHORITY
Barabara Plaza,
Off Airport South Road,
P. O. Box, 49712 - 00100,
NAIROBI.

FINANCIER:

THE WORLD BANK

PROJECT:

HORN OF AFRICA GATEWAY DEVELOPMENT PROJECT (HOAGDP): -

Consultancy Services for the Design and Works Supervision for the Proposed Extension of Meru Bypass.

CONTRACT NO:

KeNHA/RD/CS/D/4205/2024

CONSULTANT:

egis

One Padmore Place 6th Floor,
George Padmore Road,
P. O. Box, 76672 - 00508,
NAIROBI.

DESIGN DETAILS

Action	Name	Date
Designed By:	I.O	AUG 2025
Drawn By:	W.O	AUG 2025
Checked By:	S.I	AUG 2025
Approved By:	S.O	AUG 2025

DRAWING REVISIONS

No.	Revision Details	Reviewed	Initials	Date	Approved
		By			
		Checked			
		By			
		Checked			
		By			
		Checked			
		By			
		Checked			
		By			
		Checked			

DRAWING TITLE:

DECK PANELS CONNECTION DETAILS

DRAWING SCALE:

AS SHOWN

DRAWING NO:

TYP - FB2-011

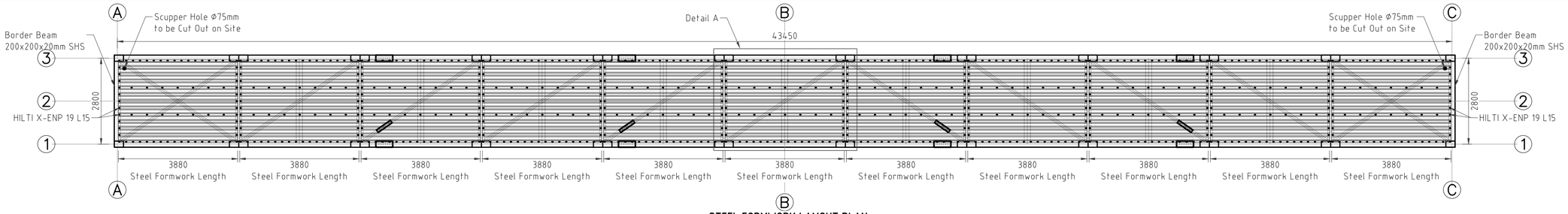

STEEL FORMWORK LAYOUT PLAN
SCALE: 1:75

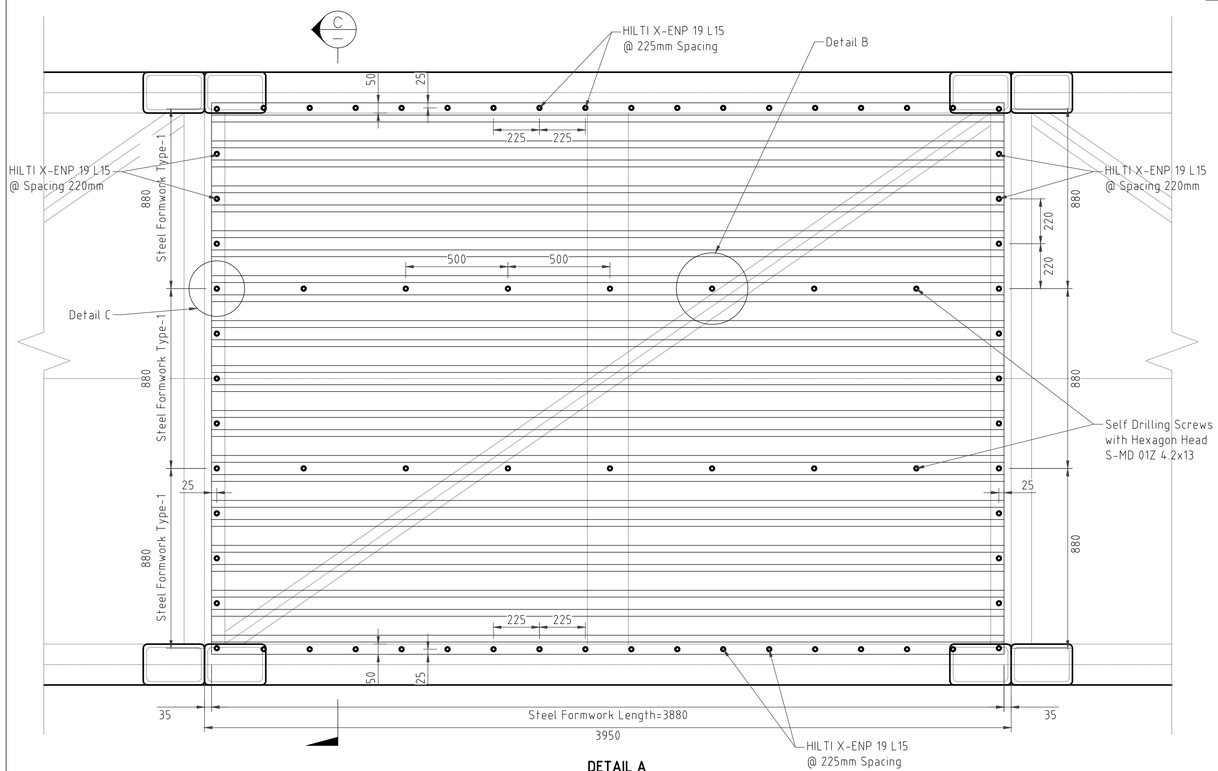

DETAIL A
SCALE: 1:15

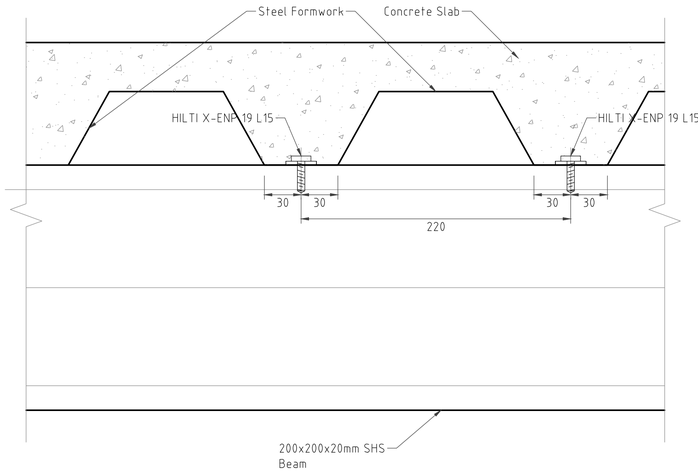

DETAIL C
SCALE: 1:2.5

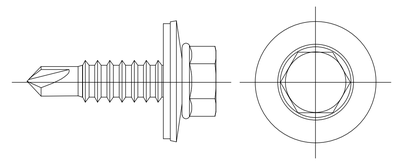

HILTI S-MD 53Z 5.5x25

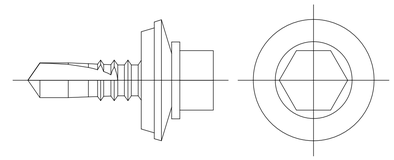

HILTI S-MD 53Z 5.5x19

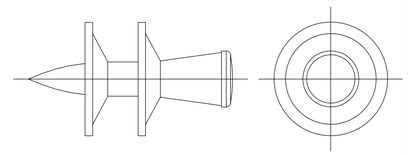

HILTI X-ENP-19 L15 MX

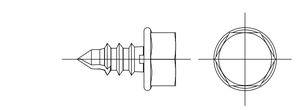

HILTI S-MD 01Z 4.2x13

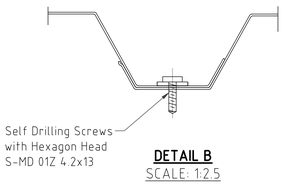

DETAIL B
SCALE: 1:2.5

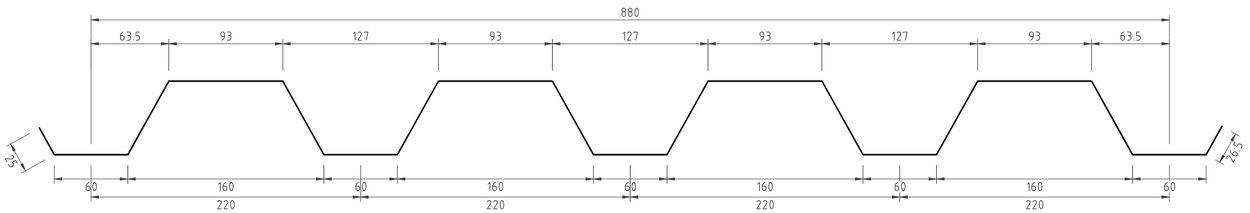

STEEL FORMWORK TYPE-1
SCALE: 1:2.5

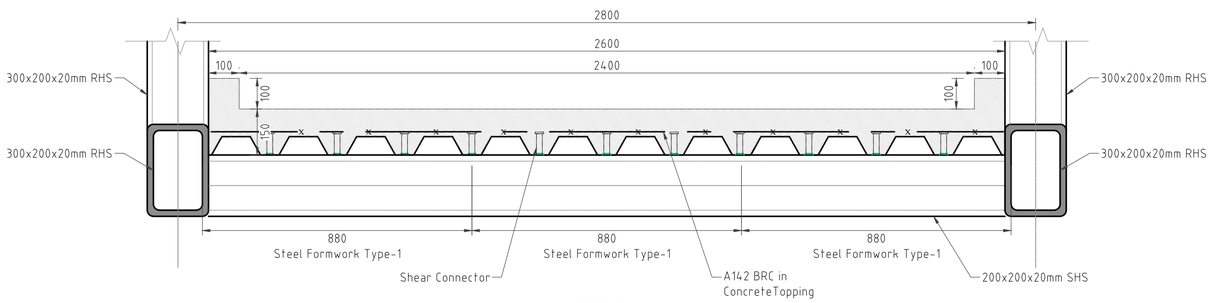

SECTION C
SCALE: 1:10

CLIENT:

KENYA NATIONAL HIGHWAY AUTHORITY
Barabara Plaza,
Off Airport South Road,
P. O. Box, 49712 - 00100,
NAIROBI.

KENYA URBAN ROADS AUTHORITY
Barabara Plaza,
Off Airport South Road,
P. O. Box, 49712 - 00100,
NAIROBI.

FINANCIER:

THE WORLD BANK

PROJECT:

HORN OF AFRICA GATEWAY DEVELOPMENT PROJECT (HOAGDP): -

Consultancy Services for the Design and Works Supervision for the Proposed Extension of Meru Bypass.

CONTRACT NO:

KeNHA/RD/CS/D/4205/2024

CONSULTANT:

One Padmore Place 6th Floor,
George Padmore Road,
P. O. Box, 76672 - 00508,
NAIROBI.

DESIGN DETAILS

Action	Name	Date
Designed By:	I.O	AUG 2025
Drawn By:	W.O	AUG 2025
Checked By:	S.I	AUG 2025
Approved By:	S.O	AUG 2025

DRAWING REVISIONS

No.	Revision Details	Reviewed	Initials	Date	Approved
		By			
		Checked			
		By			
		Checked			
		By			
		Checked			
		By			
		Checked			
		By			
		Checked			

DRAWING TITLE:

DECK SLAB DETAILS

DRAWING SCALE:

AS SHOWN

DRAWING NO:

TYP - FB2-012

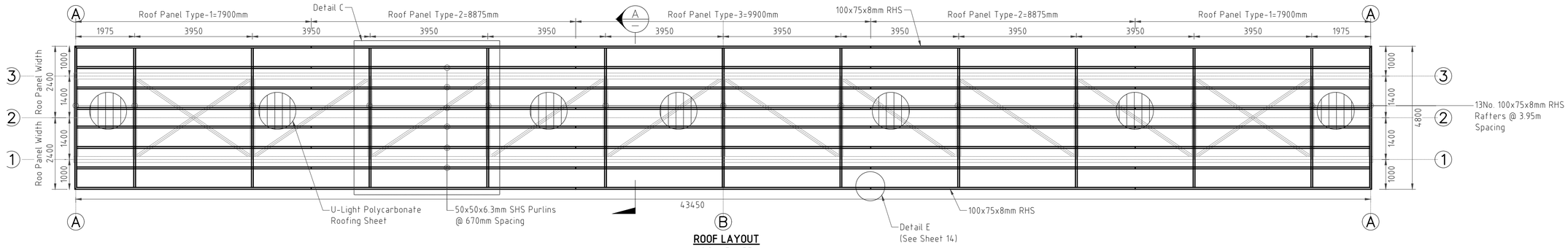

ROOF LAYOUT
SCALE: 1:75

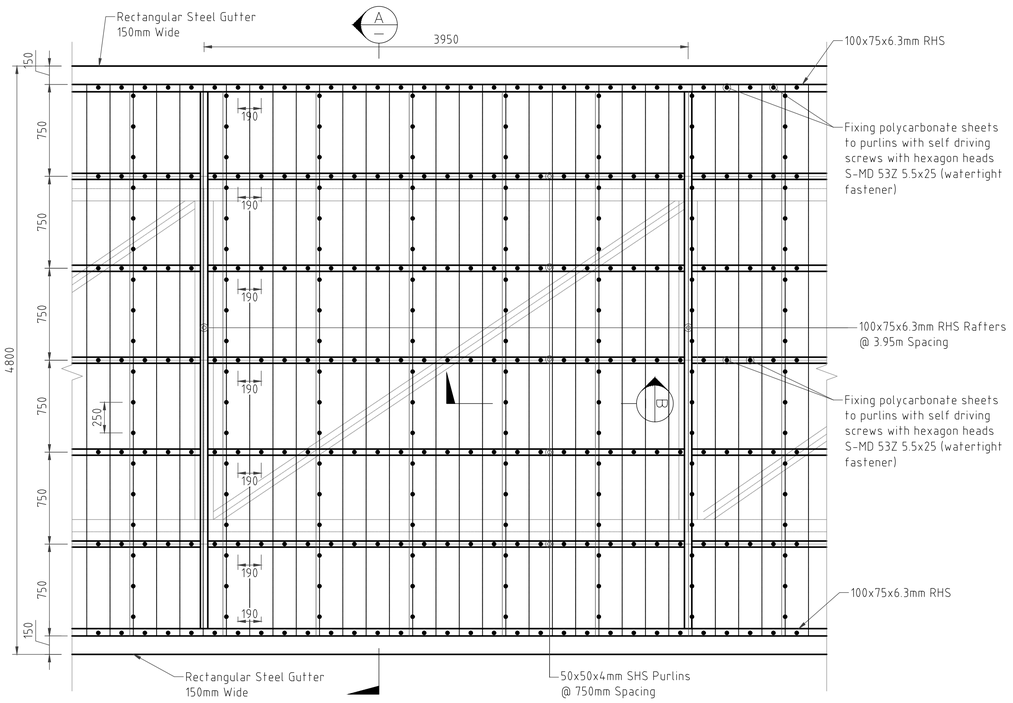

DETAIL C
SCALE: 1:25

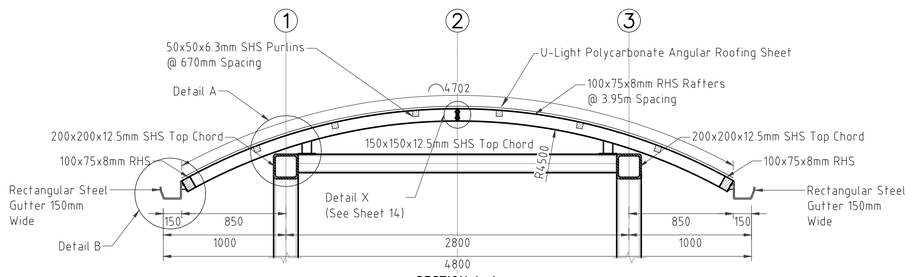

SECTION A-A
SCALE: 1:25

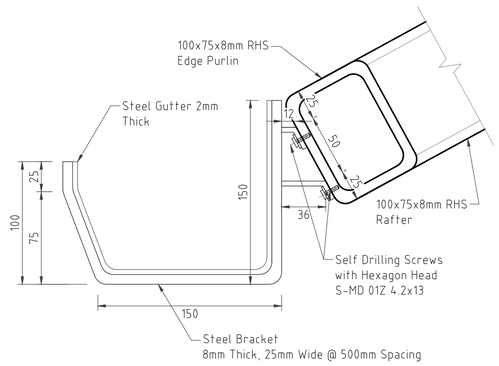

DETAIL B: STEEL GUTTER
SCALE: 1:2.5

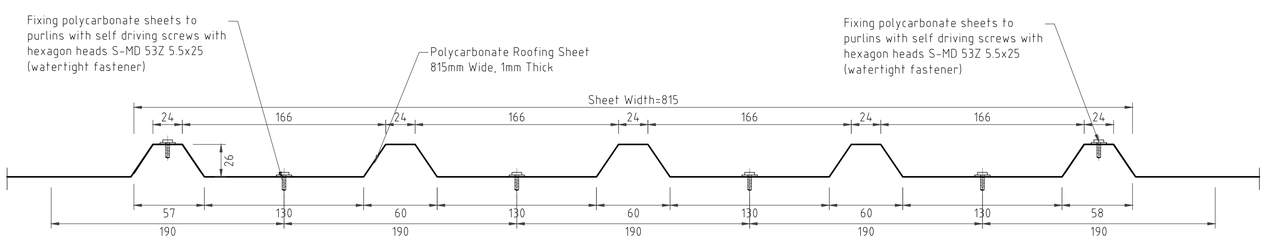

SECTION B-B
POLYCARBONATE ROOFING SHEET
SCALE: 1:2.5

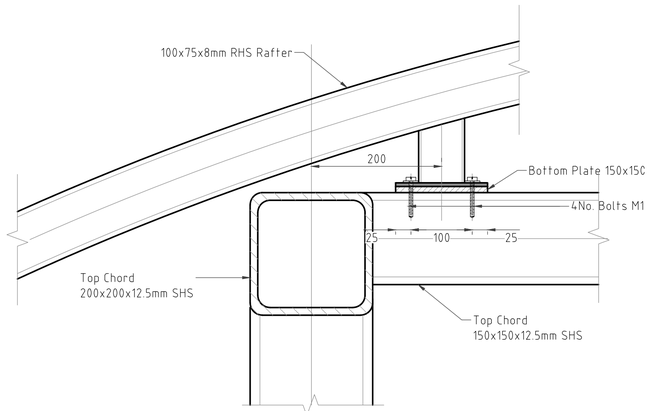

DETAIL A
SCALE: 1:5

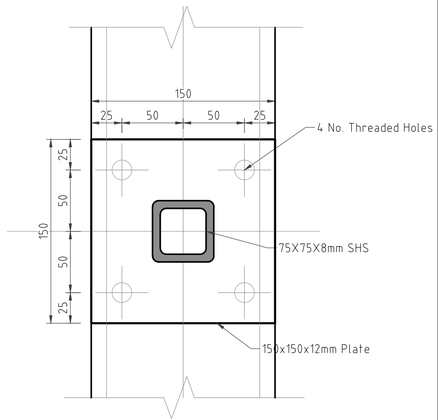

BOTTOM PLATE PLAN
SCALE: 1:2.5

CLIENT:
KENYA NATIONAL HIGHWAY AUTHORITY
Barabara Plaza,
Off Airport South Road,
P. O. Box, 49712 - 00100,
NAIROBI.

KENYA URBAN ROADS AUTHORITY
Barabara Plaza,
Off Airport South Road,
P. O. Box, 49712 - 00100,
NAIROBI.

FINANCIER:
THE WORLD BANK

PROJECT:
HORN OF AFRICA GATEWAY DEVELOPMENT PROJECT (HOAGDP): -

Consultancy Services for the Design and Works Supervision for the Proposed Extension of Meru Bypass.

CONTRACT NO:
KeNHA/RD/CS/D/4205/2024

CONSULTANT:
egis
One Padmore Place 6th Floor,
George Padmore Road,
P. O. Box, 76672 - 00508,
NAIROBI.

DESIGN DETAILS

Action	Name	Date
Designed By:	I.O	AUG 2025
Drawn By:	W.O	AUG 2025
Checked By:	S.I	AUG 2025
Approved By:	S.O	AUG 2025

DRAWING REVISIONS

No.	Revision Details	Reviewed	Initials	Date	Approved
		By			
		Checked			
		By			
		Checked			
		By			
		Checked			
		By			
		Checked			
		By			
		Checked			

DRAWING TITLE:
DECK ROOF DETAILS

DRAWING SCALE:
AS SHOWN

DRAWING NO:
TYP - FB2-013

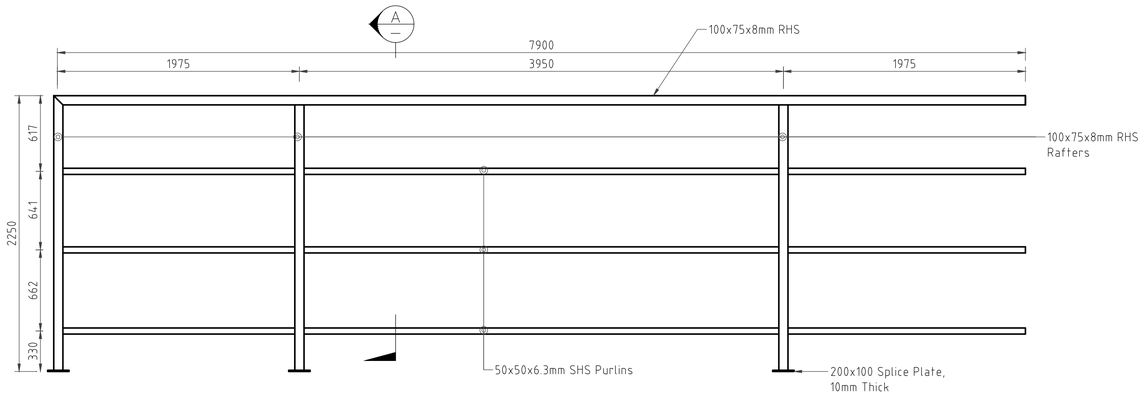

ROOF PANEL TYPE-1 (4 No.)
SCALE: 1:25

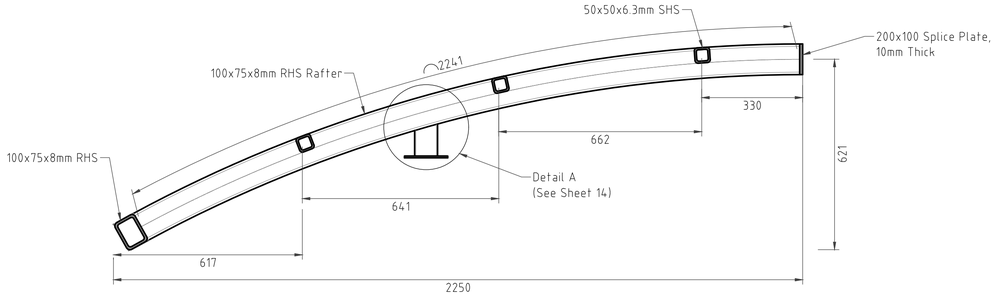

SECTION A-A:
SCALE: 1:10

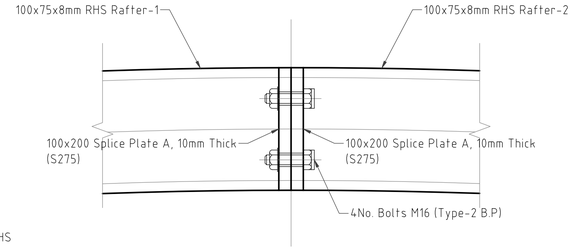

DETAIL X: RAFTER BOLTED SPLICE CONNECTION
SCALE: 1:2.5

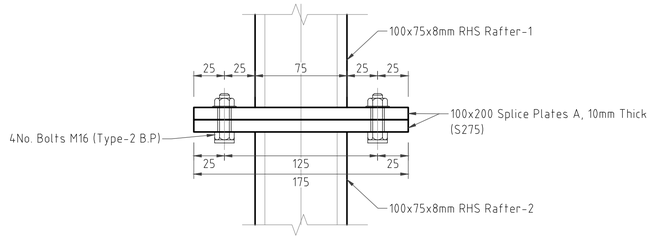

SECTION B-B
SCALE: 1:2.5

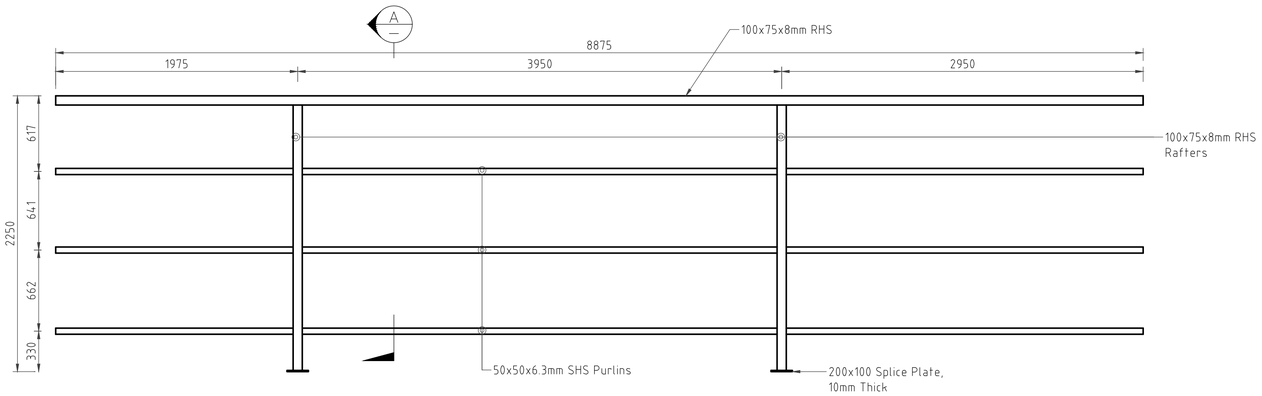

ROOF PANEL TYPE-2 (4 No.)
SCALE: 1:25

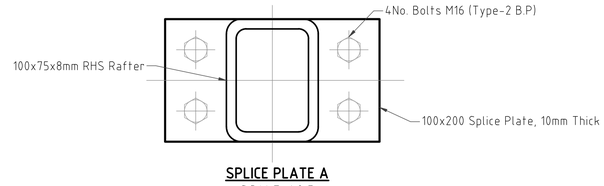

SPLICE PLATE A
SCALE: 1:2.5

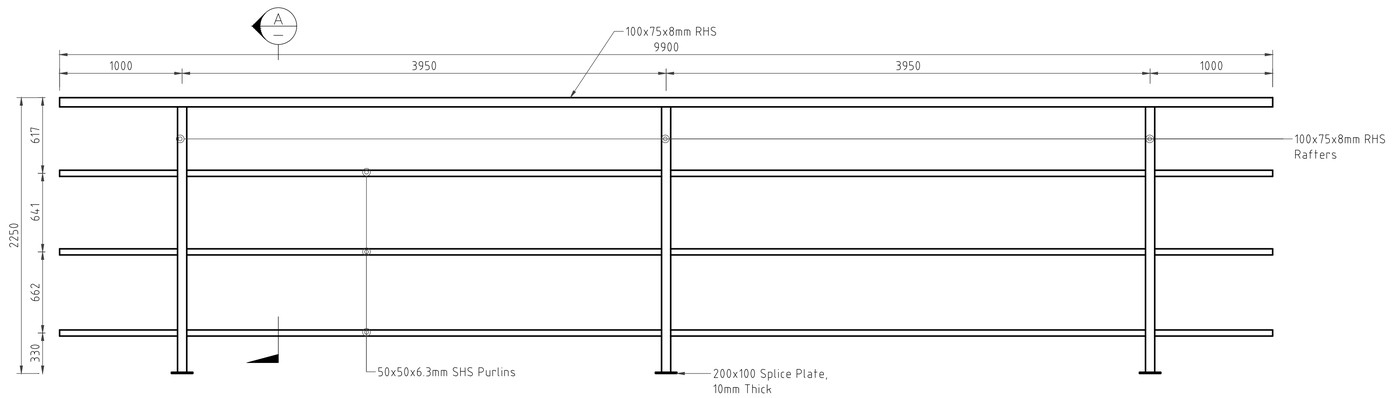

ROOF PANEL TYPE-3 (2 No.)
SCALE: 1:25

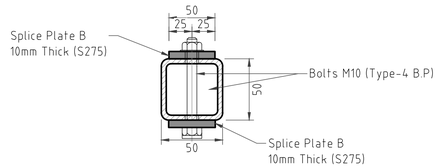

DETAIL E: PURLINS BOLTED CONNECTION
SCALE: 1:5

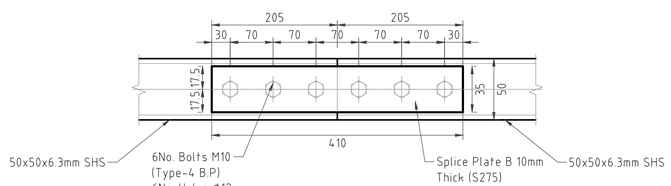

SPLICE PLATE B
SCALE: 1:5

CLIENT:
KENYA NATIONAL HIGHWAY AUTHORITY
Barabara Plaza,
Off Airport South Road,
P. O. Box, 49712 - 00100,
NAIROBI.

KENYA URBAN ROADS AUTHORITY
Barabara Plaza,
Off Airport South Road,
P. O. Box, 49712 - 00100,
NAIROBI.

FINANCIER:
THE WORLD BANK

PROJECT:
HORN OF AFRICA GATEWAY DEVELOPMENT PROJECT (HOAGDP): -

Consultancy Services for the Design and Works Supervision for the Proposed Extension of Meru Bypass.

CONTRACT NO:
KeNHA/RD/CS/D/4205/2024

CONSULTANT:
One Padmore Place 6th Floor,
George Padmore Road,
P. O. Box, 76672 - 00508,
NAIROBI.

DESIGN DETAILS

Action	Name	Date
Designed By:	I.O	AUG 2025
Drawn By:	W.O	AUG 2025
Checked By:	S.I	AUG 2025
Approved By:	S.O	AUG 2025

DRAWING REVISIONS

No.	Revision Details	Reviewed	Initials	Date	Approved
		By			
		Checked			
		By			
		Checked			
		By			
		Checked			
		By			
		Checked			
		By			
		Checked			

DRAWING TITLE:
DECK ROOF PANELS DETAILS

DRAWING SCALE:
AS SHOWN

DRAWING NO:
TYP - FB2-014

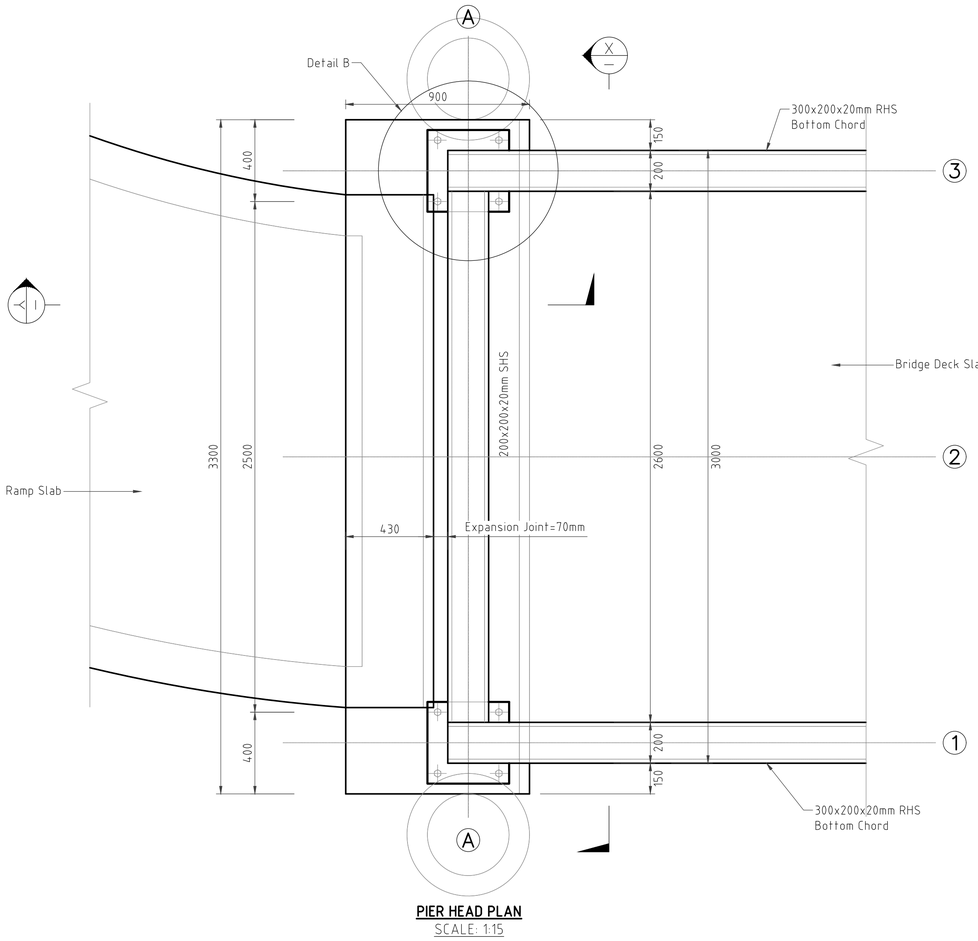

PIER HEAD PLAN
SCALE: 1:15

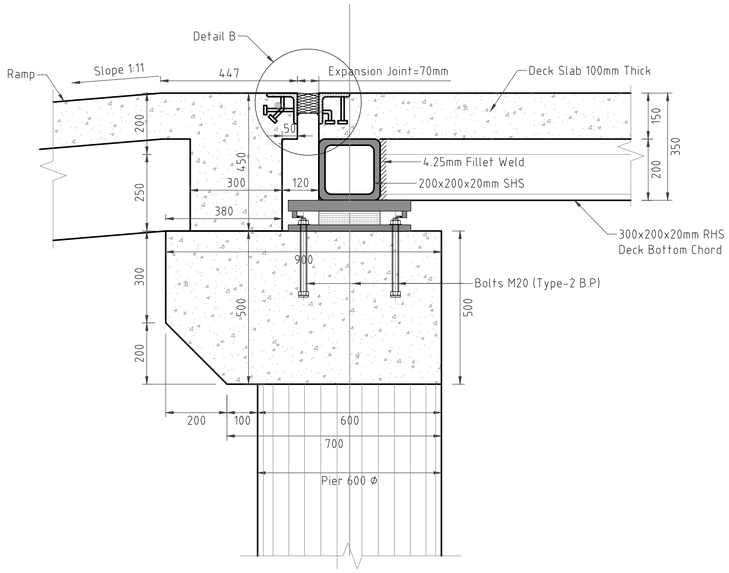

SECTION Y-Y
SCALE: 1:10

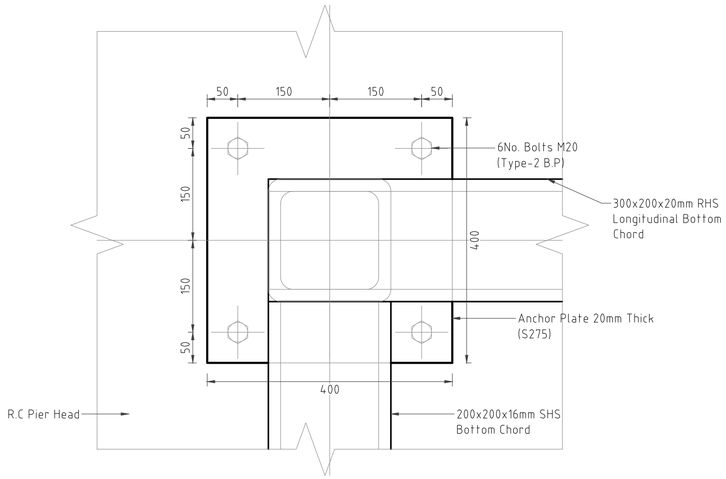

DETAIL B
SCALE: 1:5

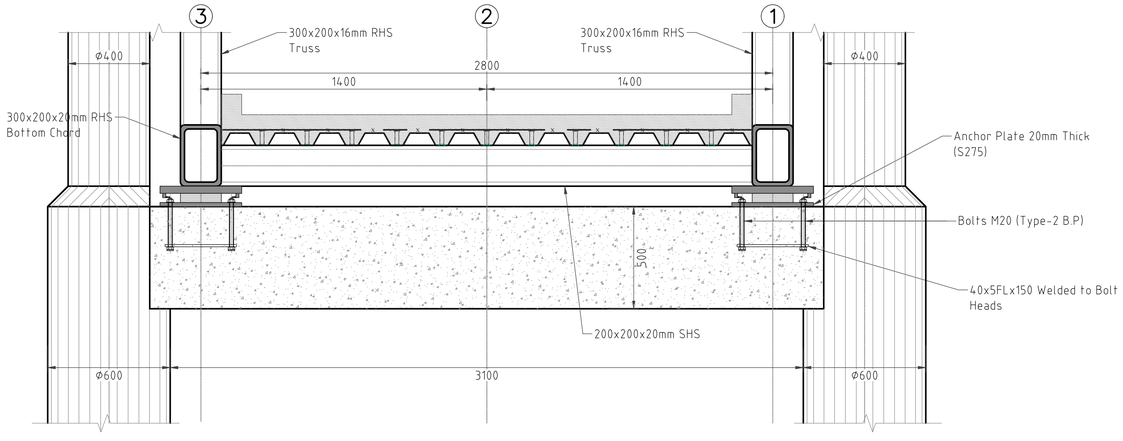

SECTION X-X
SCALE: 1:15

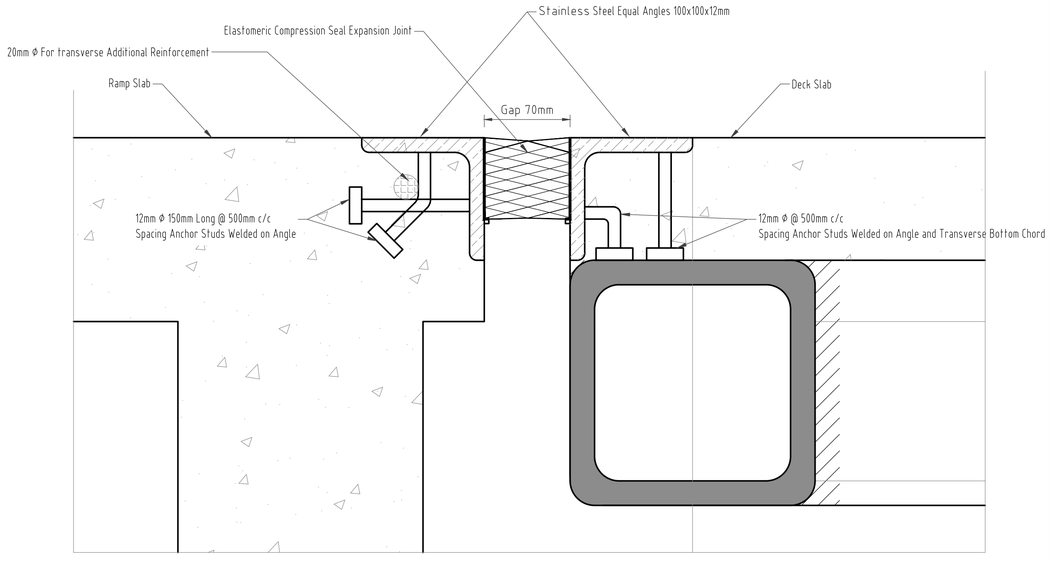

DETAIL B: 70mm COMPRESSION SEAL EXPANSION JOINT
SCALE: 1:2.5

CLIENT:

KENYA NATIONAL HIGHWAY AUTHORITY
Barabara Plaza,
Off Airport South Road,
P. O. Box, 49712 - 00100,
NAIROBI.

KENYA URBAN ROADS AUTHORITY
Barabara Plaza,
Off Airport South Road,
P. O. Box, 49712 - 00100,
NAIROBI.

FINANCIER:

THE WORLD BANK

PROJECT:

HORN OF AFRICA GATEWAY DEVELOPMENT PROJECT (HOAGDP): -

Consultancy Services for the Design and Works Supervision for the Proposed Extension of Meru Bypass.

CONTRACT NO:

KeNHA/RD/CS/D/4205/2024

CONSULTANT:

One Padmore Place 6th Floor,
George Padmore Road,
P. O. Box, 76672 - 00508,
NAIROBI.

DESIGN DETAILS

Action	Name	Date
Designed By:	I.O	AUG 2025
Drawn By:	W.O	AUG 2025
Checked By:	S.I	AUG 2025
Approved By:	S.O	AUG 2025

DRAWING REVISIONS

No.	Revision Details	Reviewed	Initials	Date	Approved
		By			
		Checked			
		By			
		Checked			
		By			
		Checked			
		By			
		Checked			
		By			
		Checked			

DRAWING TITLE:

PIER HEAD DETAILS

DRAWING SCALE:

AS SHOWN

DRAWING NO:

TYP - FB2-015

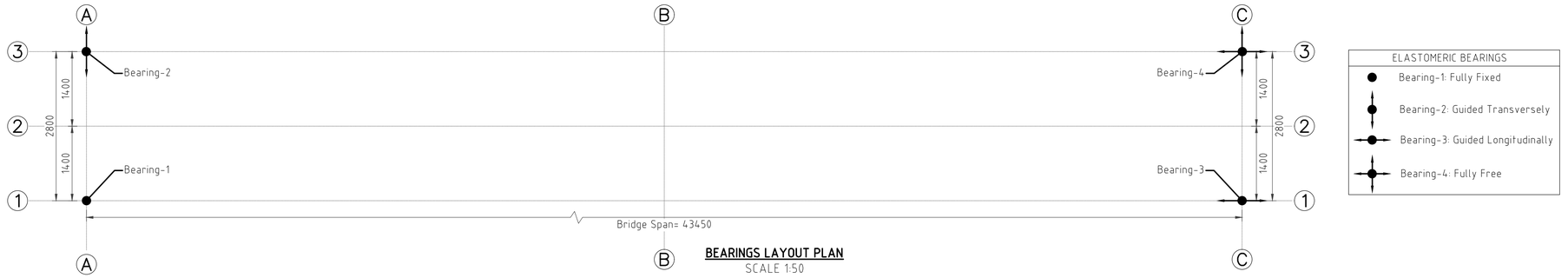

BEARINGS LAYOUT PLAN
SCALE 1:50

BEARING-1: FULLY FIXED

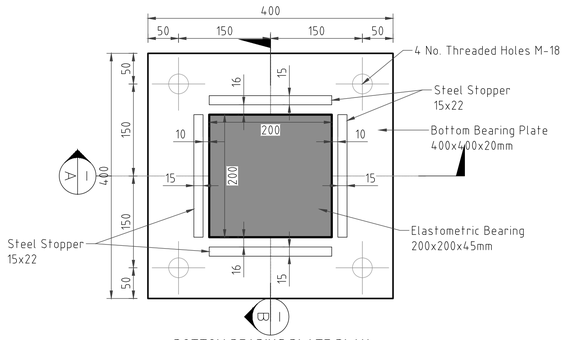

BOTTOM BEARING PLATE PLAN
SCALE: 1:5

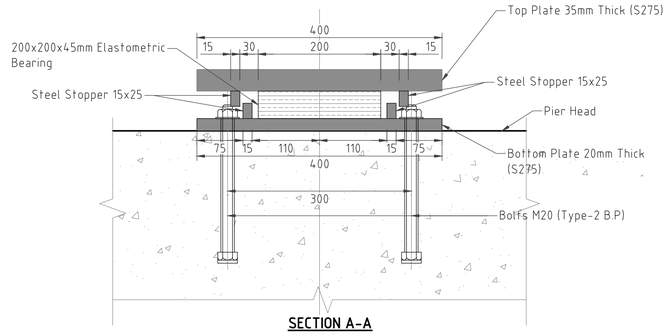

SECTION A-A
SCALE: 1:5

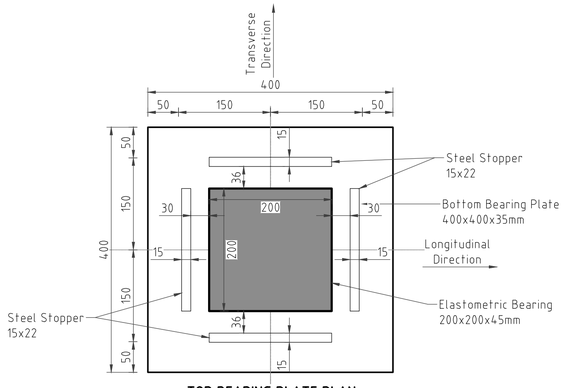

TOP BEARING PLATE PLAN
SCALE: 1:5

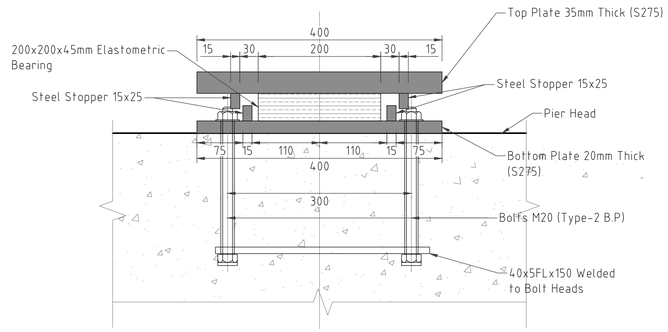

SECTION B-B
SCALE: 1:5

CLIENT:

KENYA NATIONAL HIGHWAY AUTHORITY
Barabara Plaza,
Off Airport South Road,
P. O. Box, 49712 - 00100,
NAIROBI.

KENYA URBAN ROADS AUTHORITY
Barabara Plaza,
Off Airport South Road,
P. O. Box, 49712 - 00100,
NAIROBI.

FINANCIER:

THE WORLD BANK

PROJECT:

HORN OF AFRICA GATEWAY DEVELOPMENT PROJECT (HOAGDP): -

Consultancy Services for the Design and Works Supervision for the Proposed Extension of Meru Bypass.

CONTRACT NO:

KeNHA/RD/CS/D/4205/2024

CONSULTANT:

One Padmore Place 6th Floor,
George Padmore Road,
P. O. Box, 76672 - 00508,
NAIROBI.

DESIGN DETAILS

Action	Name	Date
Designed By:	I.O	AUG 2025
Drawn By:	W.O	AUG 2025
Checked By:	S.I	AUG 2025
Approved By:	S.O	AUG 2025

DRAWING REVISIONS

No.	Revision Details	Reviewed	Initials	Date	Approved
		By			
		Checked			
		By			
		Checked			
		By			
		Checked			
		By			
		Checked			
		By			
		Checked			

DRAWING TITLE:

BEARINGS DETAILS

DRAWING SCALE:

AS SHOWN

DRAWING NO:

TYP - FB2-016

BEARING-2:GUIDED TRANSVERSELY

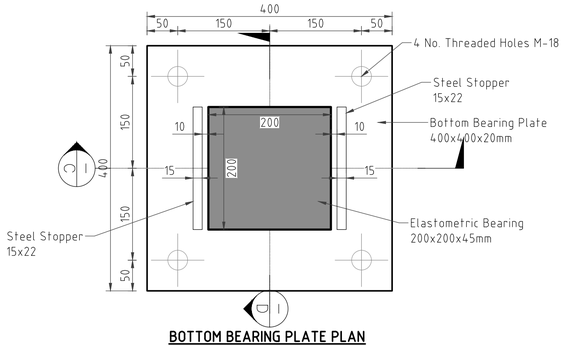

BOTTOM BEARING PLATE PLAN
SCALE: 1:5

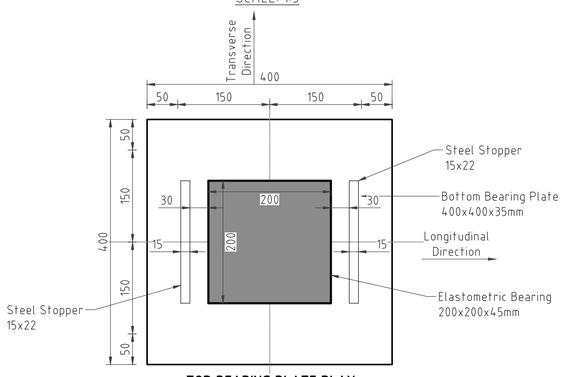

TOP BEARING PLATE PLAN
SCALE: 1:5

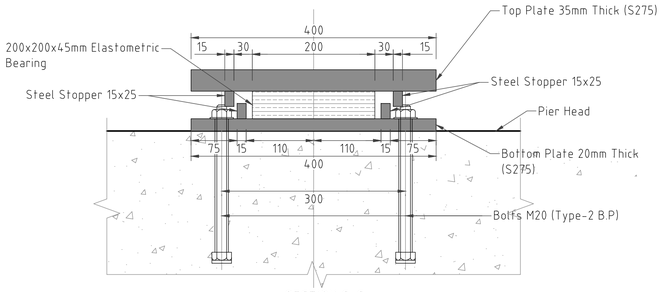

SECTION C-C
SCALE: 1:5

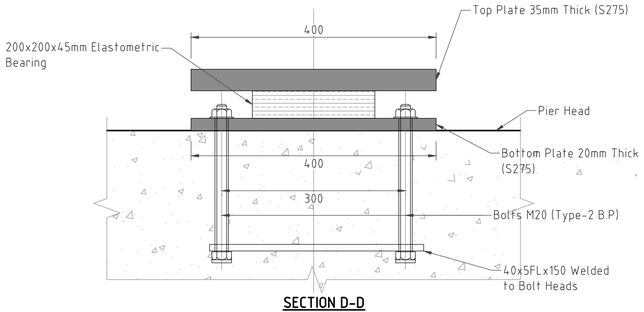

SECTION D-D
SCALE: 1:5

BEARING-3:GUIDED LONGITUDINALLY

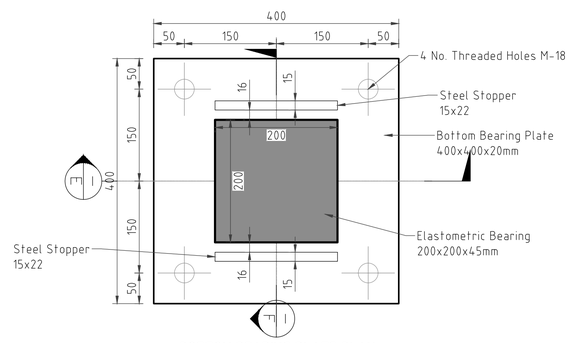

BOTTOM BEARING PLATE PLAN
SCALE: 1:5

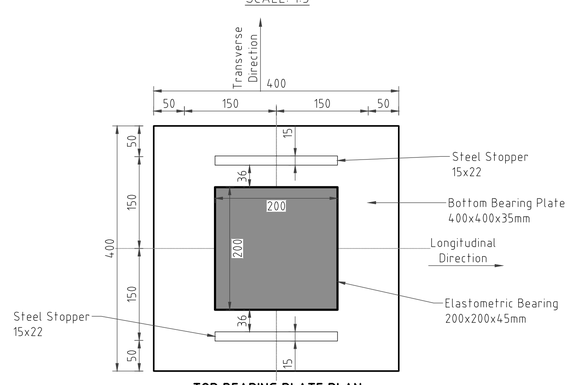

TOP BEARING PLATE PLAN
SCALE: 1:5

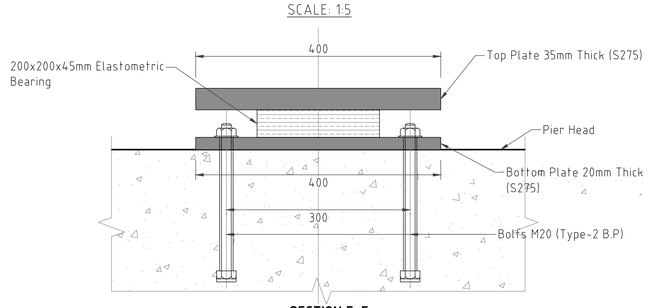

SECTION E-E
SCALE: 1:5

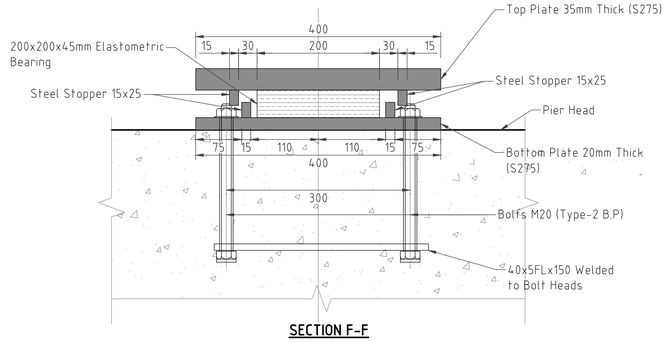

SECTION F-F
SCALE: 1:5

BEARING-4: FULLY FREE

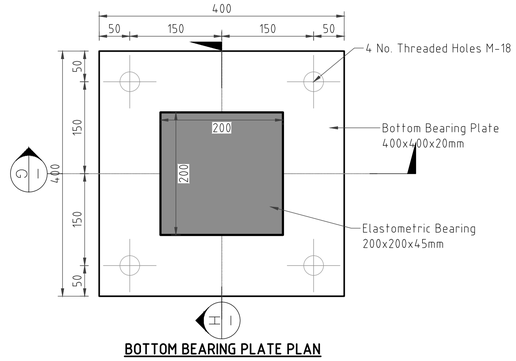

BOTTOM BEARING PLATE PLAN
SCALE: 1:5

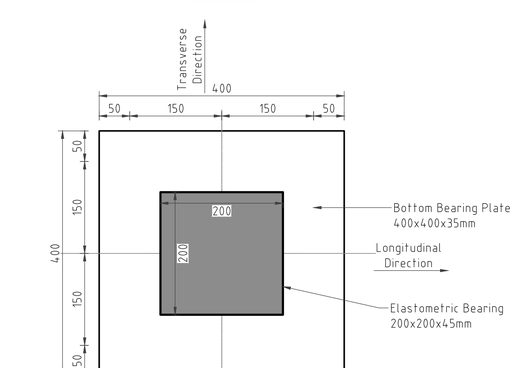

TOP BEARING PLATE PLAN
SCALE: 1:5

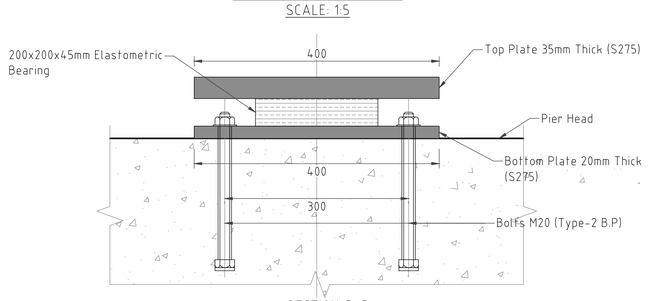

SECTION G-G
SCALE: 1:5

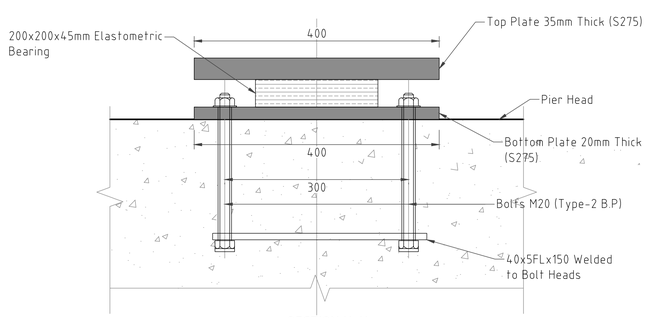

SECTION H-H
SCALE: 1:5

CLIENT:

KENYA NATIONAL HIGHWAY AUTHORITY
Barabara Plaza,
Off Airport South Road,
P. O. Box, 49712 - 00100,
NAIROBI.

KENYA URBAN ROADS AUTHORITY
Barabara Plaza,
Off Airport South Road,
P. O. Box, 49712 - 00100,
NAIROBI.

FINANCIER:

THE WORLD BANK

PROJECT:

HORN OF AFRICA GATEWAY DEVELOPMENT PROJECT (HOAGDP): -

Consultancy Services for the Design and Works Supervision for the Proposed Extension of Meru Bypass.

CONTRACT NO:

KeNHA/RD/CS/D/4205/2024

CONSULTANT:

One Padmore Place 6th Floor,
George Padmore Road,
P. O. Box, 76672 - 00508,
NAIROBI.

DESIGN DETAILS

Action	Name	Date
Designed By:	I.O	AUG 2025
Drawn By:	W.O	AUG 2025
Checked By:	S.I	AUG 2025
Approved By:	S.O	AUG 2025

DRAWING REVISIONS

No.	Revision Details	Reviewed	Initials	Date	Approved
		By			
		Checked			
		By			
		Checked			
		By			
		Checked			
		By			
		Checked			
		By			
		Checked			

DRAWING TITLE:

BEARINGS DETAILS

DRAWING SCALE:

AS SHOWN

DRAWING NO:

TYP - FB2-017

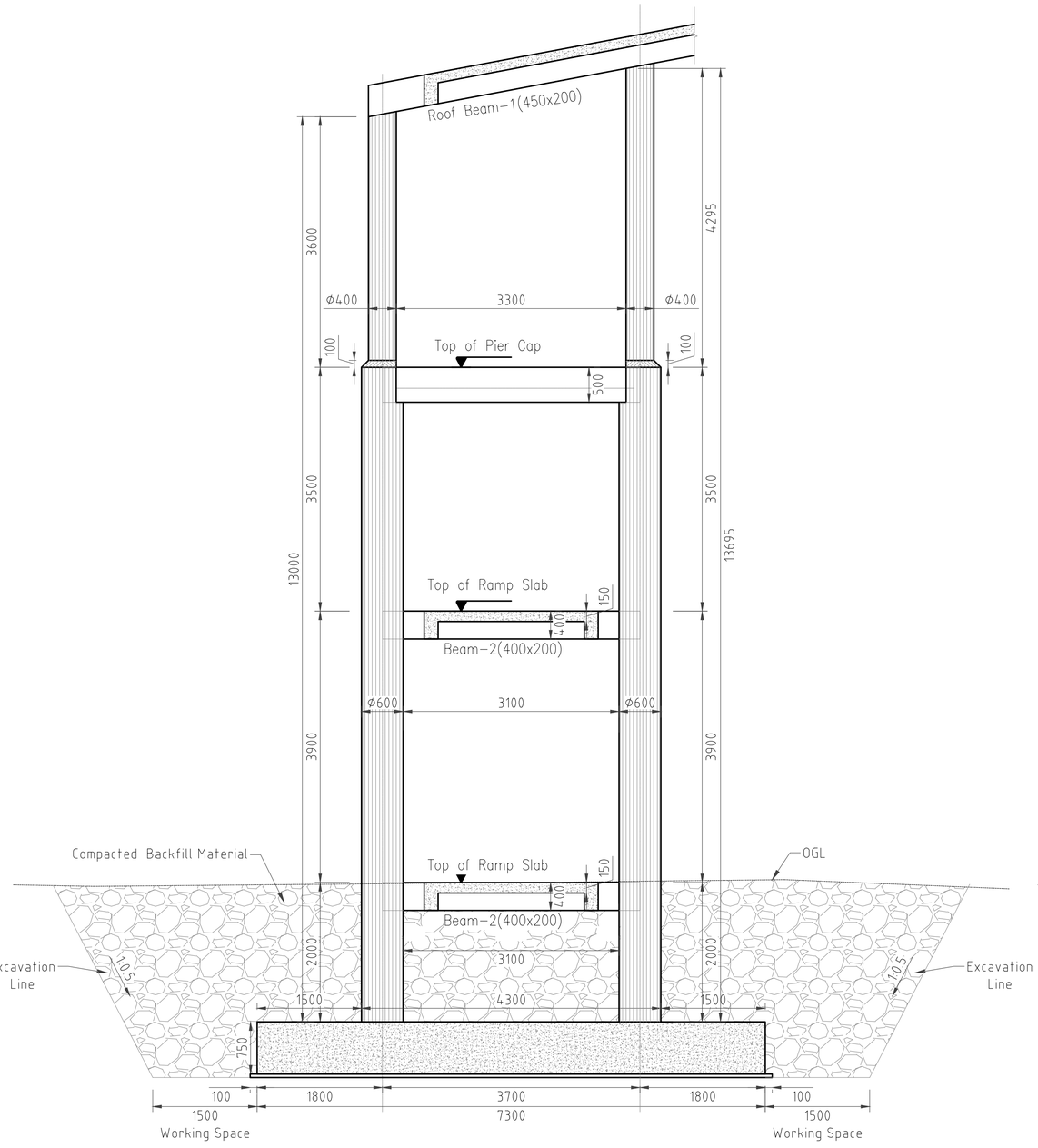

PIER ELEVATION

SCALE 1:50

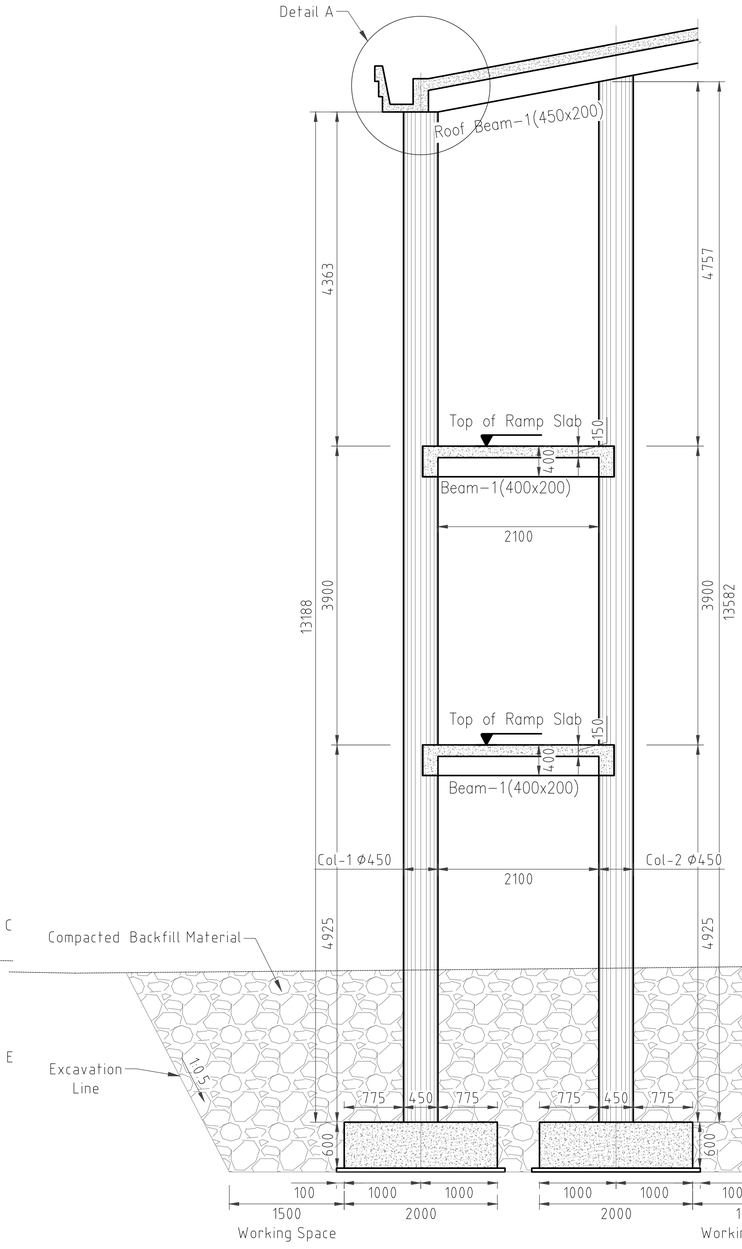

COLUMN-1 ELEVATION

SCALE 1:50

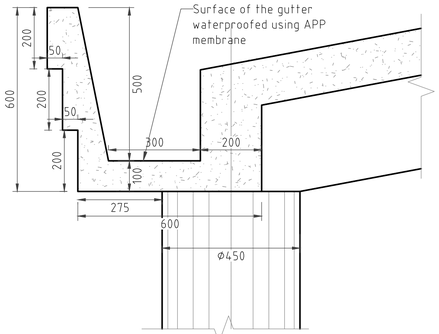

DETAIL A: CONCRETE GUTTER

SCALE 1:10

CLIENT:

KENYA NATIONAL HIGHWAY AUTHORITY
Barabara Plaza,
Off Airport South Road,
P. O. Box, 49712 - 00100,
NAIROBI.

KENYA URBAN ROADS AUTHORITY
Barabara Plaza,
Off Airport South Road,
P. O. Box, 49712 - 00100,
NAIROBI.

FINANCIER:

THE WORLD BANK

PROJECT:

HORN OF AFRICA GATEWAY DEVELOPMENT PROJECT (HOAGDP): -

Consultancy Services for the Design and Works Supervision for the Proposed Extension of Meru Bypass.

CONTRACT NO:

KeNHA/RD/CS/D/4205/2024

CONSULTANT:

One Padmore Place 6th Floor,
George Padmore Road,
P. O. Box, 76672 - 00508,
NAIROBI.

DESIGN DETAILS

Action	Name	Date
Designed By:	I.O	AUG 2025
Drawn By:	W.O	AUG 2025
Checked By:	S.I	AUG 2025
Approved By:	S.O	AUG 2025

DRAWING REVISIONS

No.	Revision Details	Reviewed	Initials	Date	Approved
		By			
		Checked			
		By			
		Checked			
		By			
		Checked			
		By			
		Checked			
		By			
		Checked			

DRAWING TITLE:

COLUMNS ELEVATIONS

DRAWING SCALE:

AS SHOWN

DRAWING NO:

TYP - FB2-018

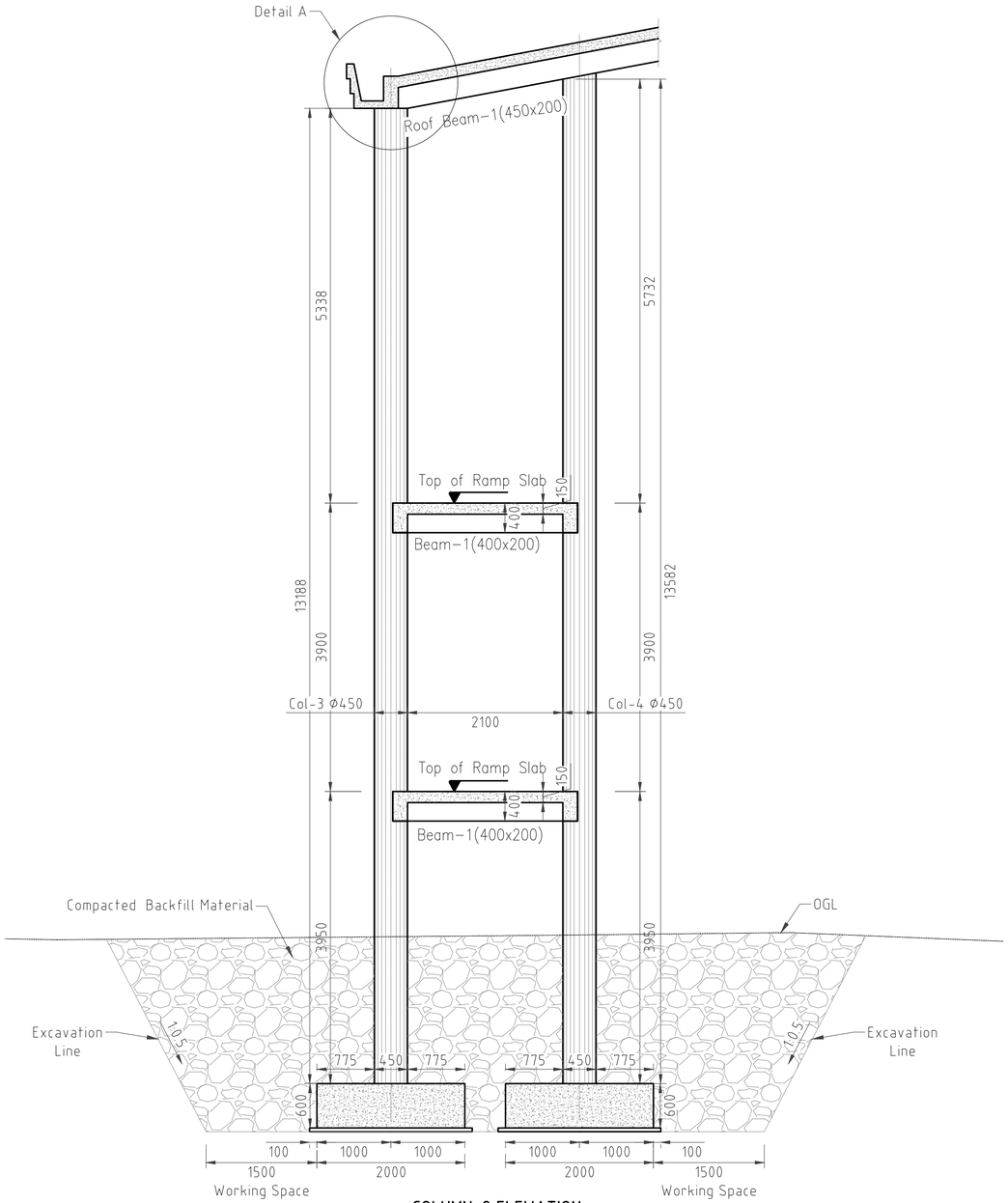

COLUMN-2 ELEVATION
SCALE 1:50

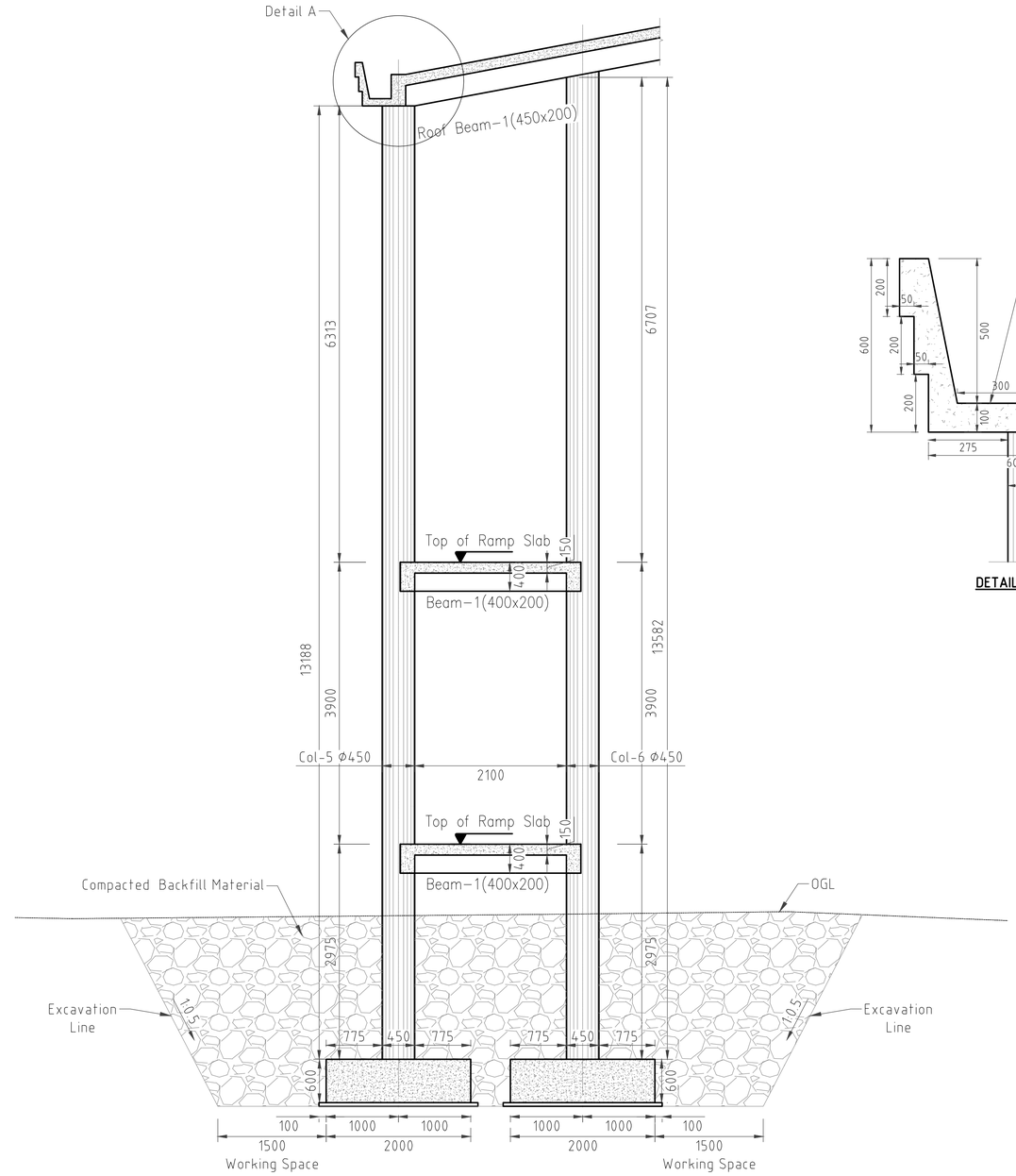

COLUMN-3 ELEVATION
SCALE 1:50

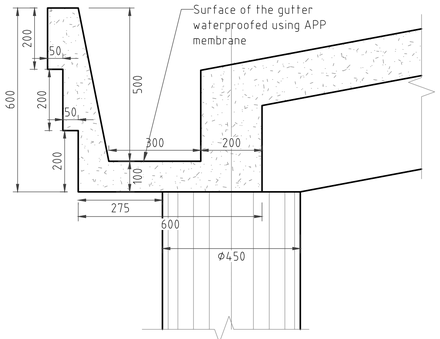

DETAIL A: CONCRETE GUTTER
SCALE 1:10

CLIENT:

KENYA NATIONAL HIGHWAY AUTHORITY
Barabara Plaza,
Off Airport South Road,
P. O. Box, 49712 - 00100,
NAIROBI.

KENYA URBAN ROADS AUTHORITY
Barabara Plaza,
Off Airport South Road,
P. O. Box, 49712 - 00100,
NAIROBI.

FINANCIER:

THE WORLD BANK

PROJECT:

HORN OF AFRICA GATEWAY DEVELOPMENT PROJECT (HOAGDP): -

Consultancy Services for the Design and Works Supervision for the Proposed Extension of Meru Bypass.

CONTRACT NO:

KeNHA/RD/CS/D/4205/2024

CONSULTANT:

One Padmore Place 6th Floor,
George Padmore Road,
P. O. Box, 76672 - 00508,
NAIROBI.

DESIGN DETAILS

Action	Name	Date
Designed By:	I.O	AUG 2025
Drawn By:	W.O	AUG 2025
Checked By:	S.I	AUG 2025
Approved By:	S.O	AUG 2025

DRAWING REVISIONS

No.	Revision Details	Reviewed	Initials	Date	Approved
		By			
		Checked			
		By			
		Checked			
		By			
		Checked			
		By			
		Checked			
		By			
		Checked			

DRAWING TITLE:

COLUMNS ELEVATIONS

DRAWING SCALE:

AS SHOWN

DRAWING NO:

TYP - FB2-019

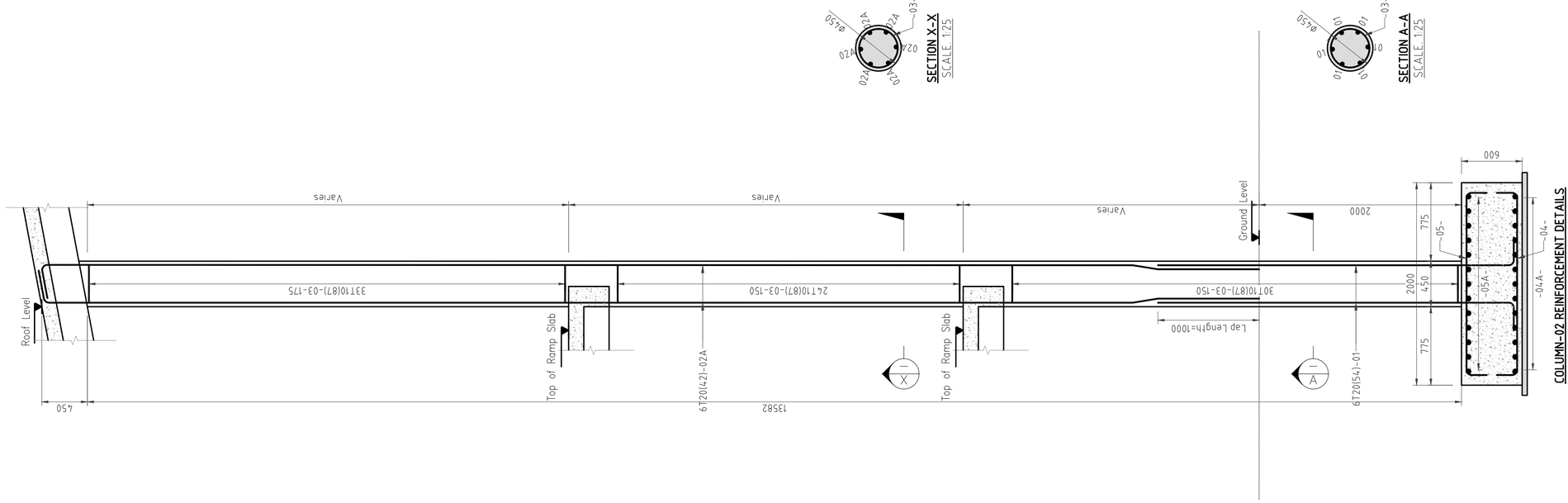

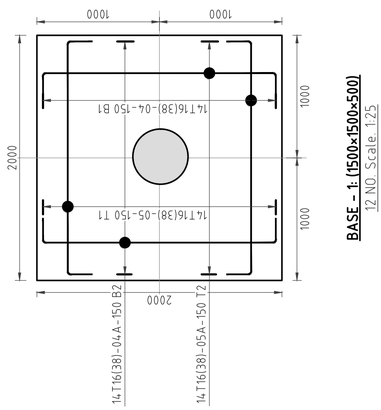

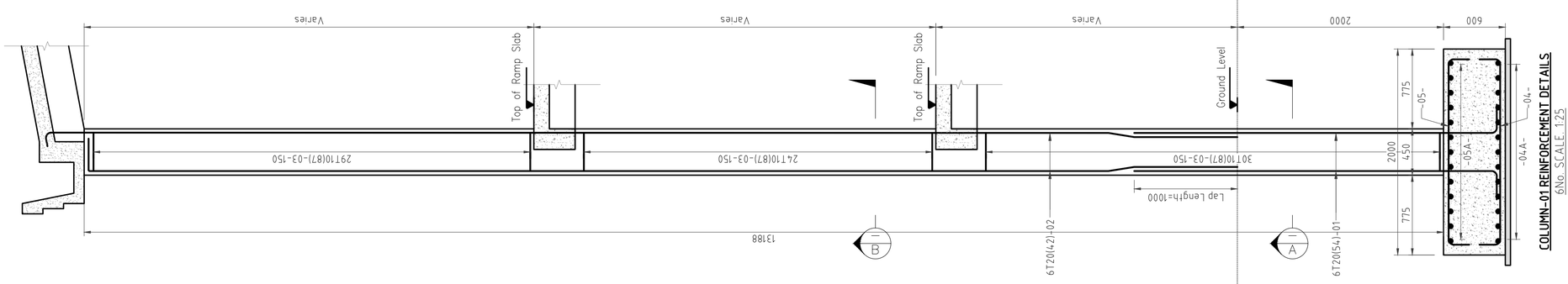

CLIENT:

KENYA NATIONAL HIGHWAY AUTHORITY
Barabara Plaza,
Off Airport South Road,
P. O. Box, 49712 - 00100,
NAIROBI.

KENYA URBAN ROADS AUTHORITY
Barabara Plaza,
Off Airport South Road,
P. O. Box, 49712 - 00100,
NAIROBI.

FINANCIER:

THE WORLD BANK

PROJECT:

HORN OF AFRICA GATEWAY DEVELOPMENT PROJECT (HOAGDP): -

Consultancy Services for the Design and Works Supervision for the Proposed Extension of Meru Bypass.

CONTRACT NO:

KeNHA/RD/CS/D/4205/2024

CONSULTANT:

One Padmore Place 6th Floor,
George Padmore Road,
P. O. Box, 76672 - 00508,
NAIROBI.

DESIGN DETAILS

Action	Name	Date
Designed By:	I.O	AUG 2025
Drawn By:	W.O	AUG 2025
Checked By:	S.I	AUG 2025
Approved By:	S.O	AUG 2025

DRAWING REVISIONS

No.	Revision Details	Reviewed	Initials	Date	Approved
		By			
		Checked			
		By			
		Checked			
		By			
		Checked			
		By			
		Checked			
		By			
		Checked			

DRAWING TITLE:

COLUMN-01 AND COLUMN-02 REINFORCEMENT DETAILS

DRAWING SCALE:

AS SHOWN

DRAWING NO:

TYP - FB2-020

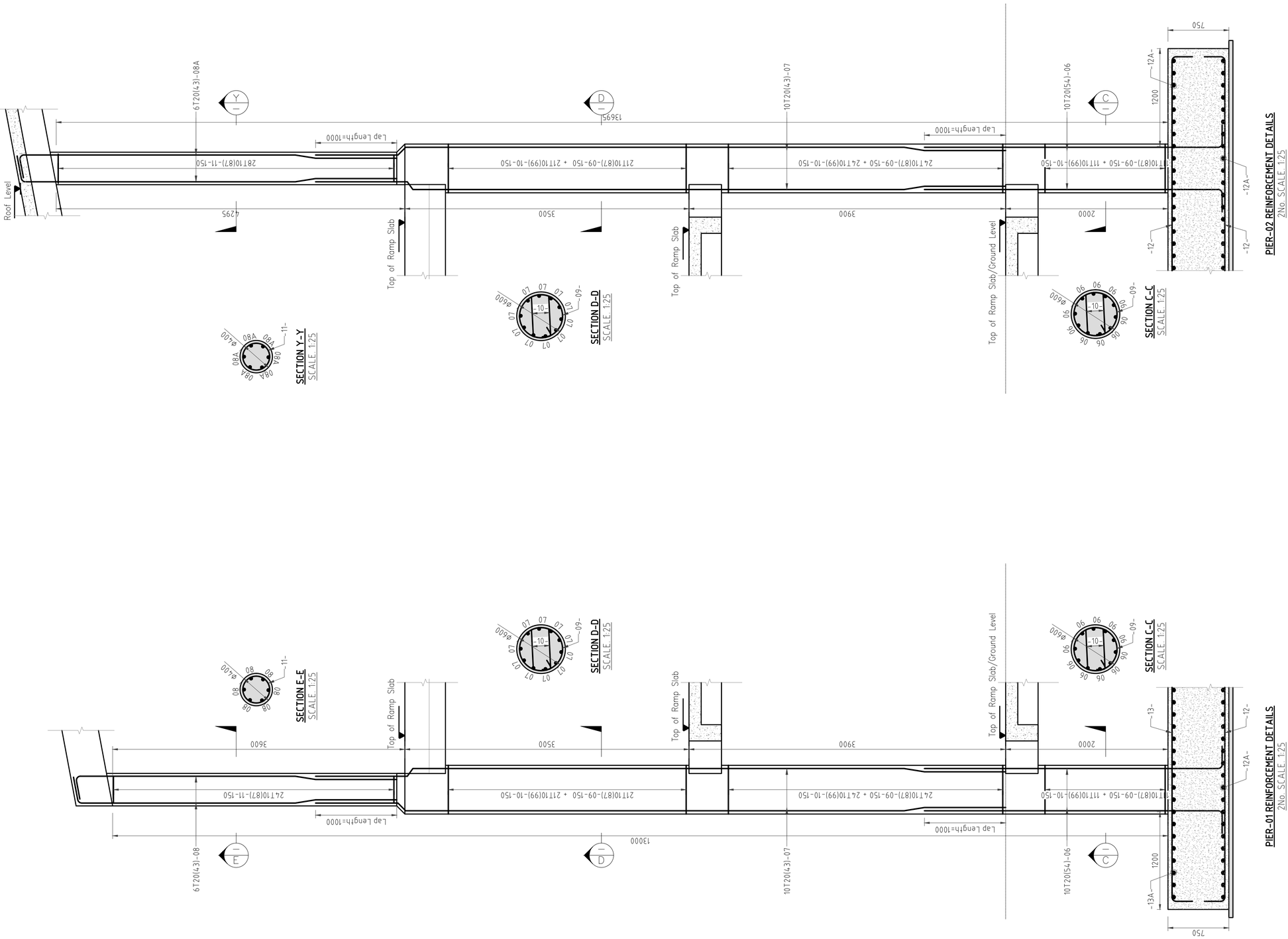

CLIENT:

KENYA NATIONAL HIGHWAY AUTHORITY
Barabara Plaza,
Off Airport South Road,
P. O. Box, 49712 - 00100,
NAIROBI.

KENYA URBAN ROADS AUTHORITY
Barabara Plaza,
Off Airport South Road,
P. O. Box, 49712 - 00100,
NAIROBI.

FINANCIER:

THE WORLD BANK

PROJECT:

HORN OF AFRICA GATEWAY DEVELOPMENT PROJECT (HOAGDP): -

Consultancy Services for the Design and Works Supervision for the Proposed Extension of Meru Bypass.

CONTRACT NO:

KeNHA/RD/CS/D/4205/2024

CONSULTANT:

One Padmore Place 6th Floor,
George Padmore Road,
P. O. Box, 76672 - 00508,
NAIROBI.

DESIGN DETAILS

Action	Name	Date
Designed By:	I.O	AUG 2025
Drawn By:	W.O	AUG 2025
Checked By:	S.I	AUG 2025
Approved By:	S.O	AUG 2025

DRAWING REVISIONS

No.	Revision Details	Reviewed	Initials	Date	Approved
		By			
		Checked			
		By			
		Checked			
		By			
		Checked			
		By			
		Checked			
		By			
		Checked			

DRAWING TITLE:

PIER-1 AND PIER-2 REINFORCEMENT DETAILS

DRAWING SCALE:

AS SHOWN

DRAWING NO:

TYP - FB2-021

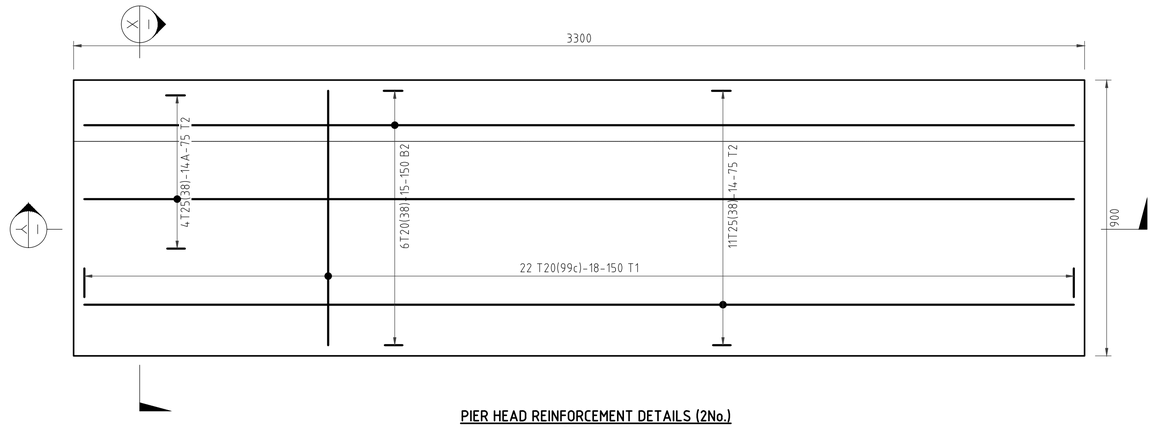

PIER HEAD REINFORCEMENT DETAILS (2No.)
SCALE. 1:10

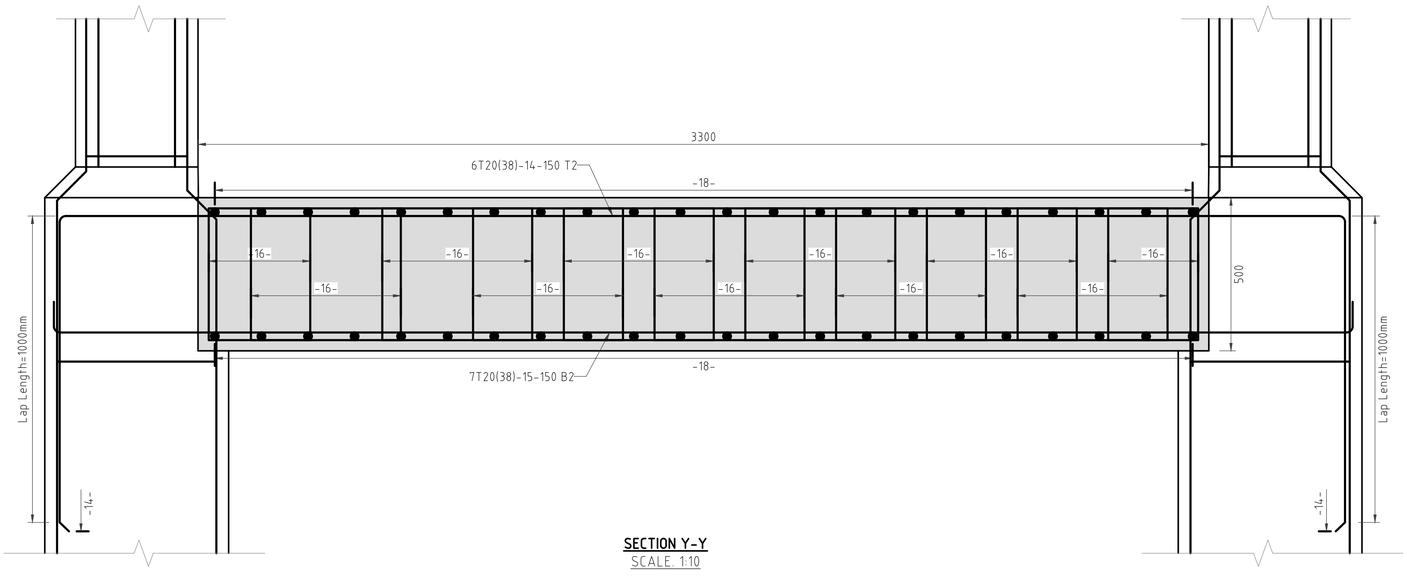

SECTION Y-Y
SCALE. 1:10

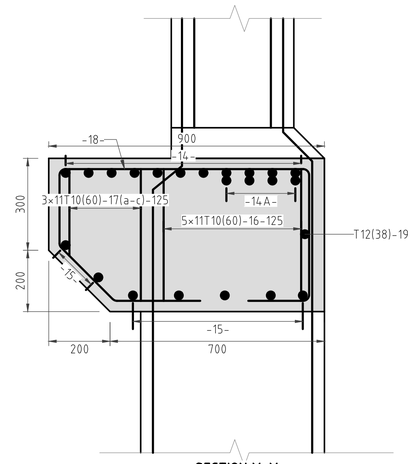

SECTION X-X
SCALE. 1:10

CLIENT:
KENYA NATIONAL HIGHWAY AUTHORITY
Barabara Plaza,
Off Airport South Road,
P. O. Box, 49712 - 00100,
NAIROBI.

KENYA URBAN ROADS AUTHORITY
Barabara Plaza,
Off Airport South Road,
P. O. Box, 49712 - 00100,
NAIROBI.

FINANCIER:
THE WORLD BANK

PROJECT:
HORN OF AFRICA GATEWAY DEVELOPMENT PROJECT (HOAGDP): -

Consultancy Services for the Design and Works Supervision for the Proposed Extension of Meru Bypass.

CONTRACT NO:
KeNHA/RD/CS/D/4205/2024

CONSULTANT:
One Padmore Place 6th Floor,
George Padmore Road,
P. O. Box, 76672 - 00508,
NAIROBI.

DESIGN DETAILS		
Action	Name	Date
Designed By:	I.O	AUG 2025
Drawn By:	W.O	AUG 2025
Checked By:	S.I	AUG 2025
Approved By:	S.O	AUG 2025

DRAWING REVISIONS					
No.	Revision Details	Reviewed	Initials	Date	Approved
		By			
		Checked			
		By			
		Checked			
		By			
		Checked			
		By			
		Checked			
		By			
		Checked			

DRAWING TITLE:
PIER HEAD REINFORCEMENT DETAILS

DRAWING SCALE:
AS SHOWN

DRAWING NO:
TYP - FB2-022

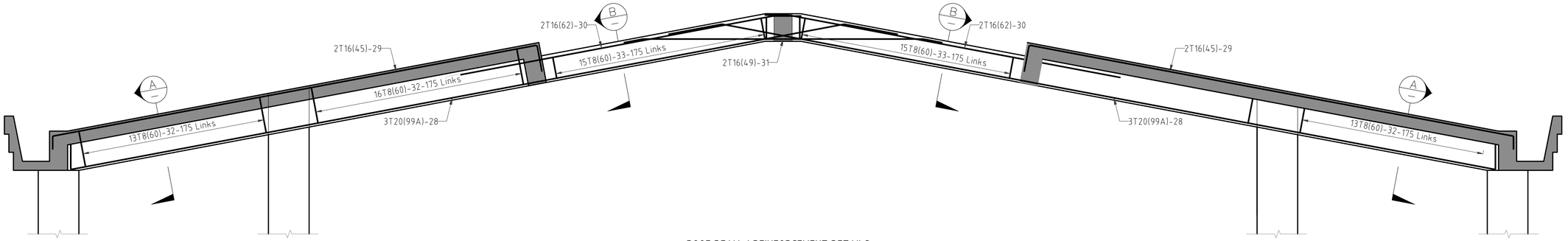

ROOF BEAM-1 REINFORCEMENT DETAILS
2No. SCALE. 1:25

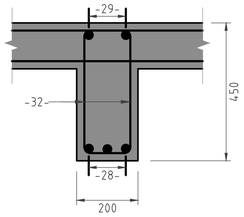

SECTION A-A
SCALE. 1:10

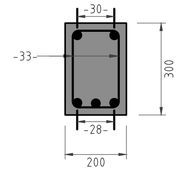

SECTION B-B
SCALE. 1:10

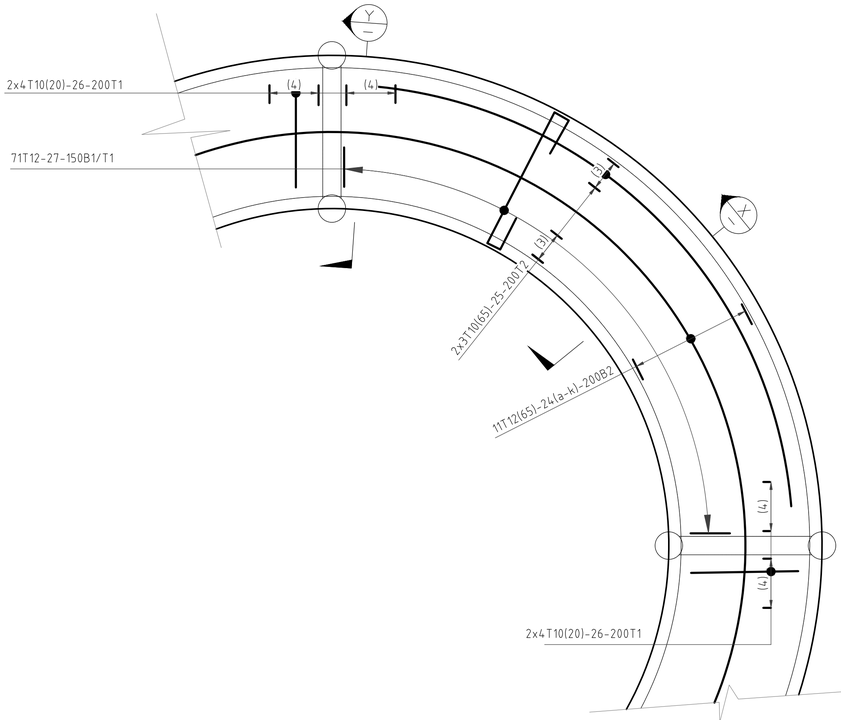

TYPICAL RAMP SLAB REINFORCEMENT DETAILS
SCALE. 1:50

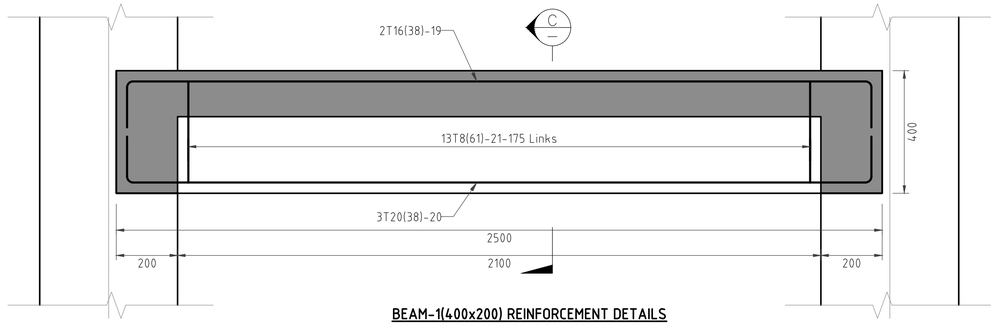

BEAM-1(400x200) REINFORCEMENT DETAILS
6No. SCALE. 1:10

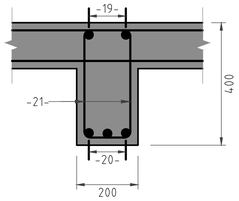

SECTION C-C
SCALE. 1:10

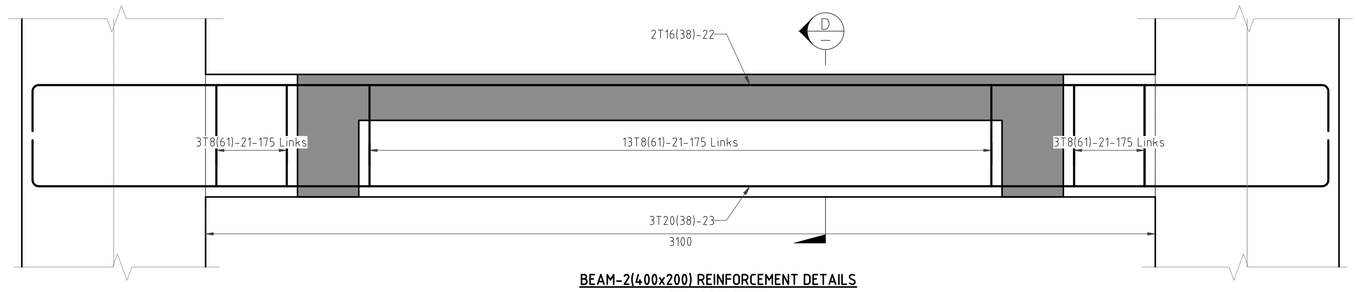

BEAM-2(400x200) REINFORCEMENT DETAILS
2No. SCALE. 1:10

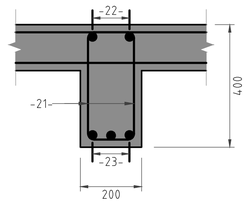

SECTION D-D
SCALE. 1:10

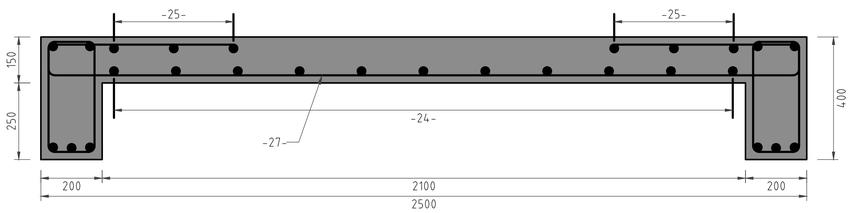

SECTION X-X
SCALE. 1:10

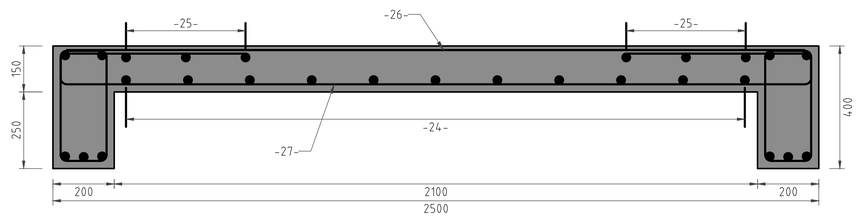

SECTION Y-Y
SCALE. 1:10

CLIENT:

KENYA NATIONAL HIGHWAY AUTHORITY
Barabara Plaza,
Off Airport South Road,
P. O. Box, 49712 - 00100,
NAIROBI.

KENYA URBAN ROADS AUTHORITY
Barabara Plaza,
Off Airport South Road,
P. O. Box, 49712 - 00100,
NAIROBI.

FINANCIER:

THE WORLD BANK

PROJECT:

HORN OF AFRICA GATEWAY DEVELOPMENT PROJECT (HOAGDP): -

Consultancy Services for the Design and Works Supervision for the Proposed Extension of Meru Bypass.

CONTRACT NO:

KeNHA/RD/CS/D/4205/2024

CONSULTANT:

One Padmore Place 6th Floor,
George Padmore Road,
P. O. Box, 76672 - 00508,
NAIROBI.

DESIGN DETAILS

Action	Name	Date
Designed By:	LO	AUG 2025
Drawn By:	W.O	AUG 2025
Checked By:	S.I	AUG 2025
Approved By:	S.O	AUG 2025

DRAWING REVISIONS

No.	Revision Details	Reviewed	Initials	Date	Approved
		By			
		Checked			
		By			
		Checked			
		By			
		Checked			
		By			
		Checked			
		By			
		Checked			

DRAWING TITLE:

BEAMS & RAMP SLAB REINFORCEMENT DETAILS

DRAWING SCALE:

AS SHOWN

DRAWING NO:

TYP - FB2-023

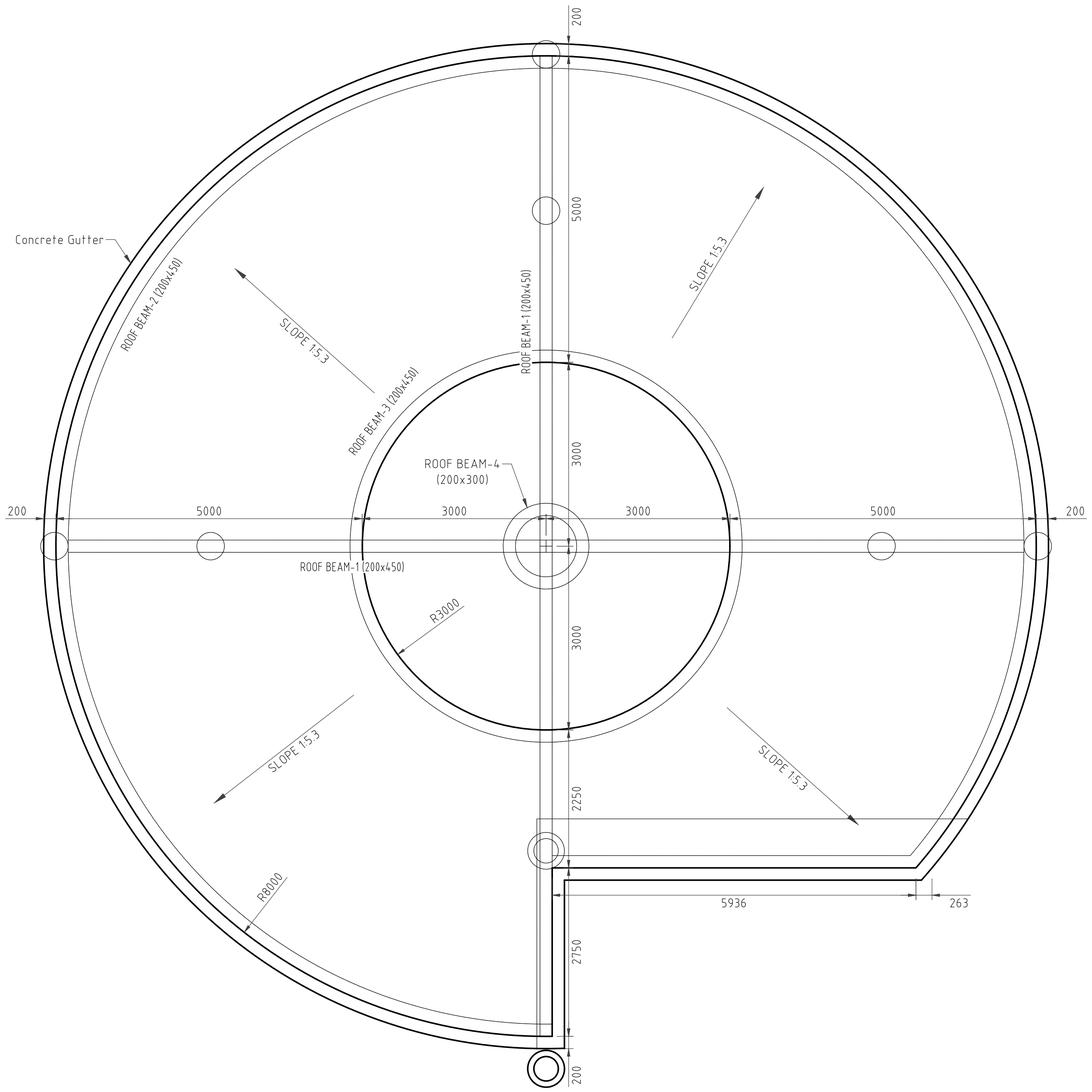

ROOF SLAB LAYOUT PLAN
SCALE 1:50

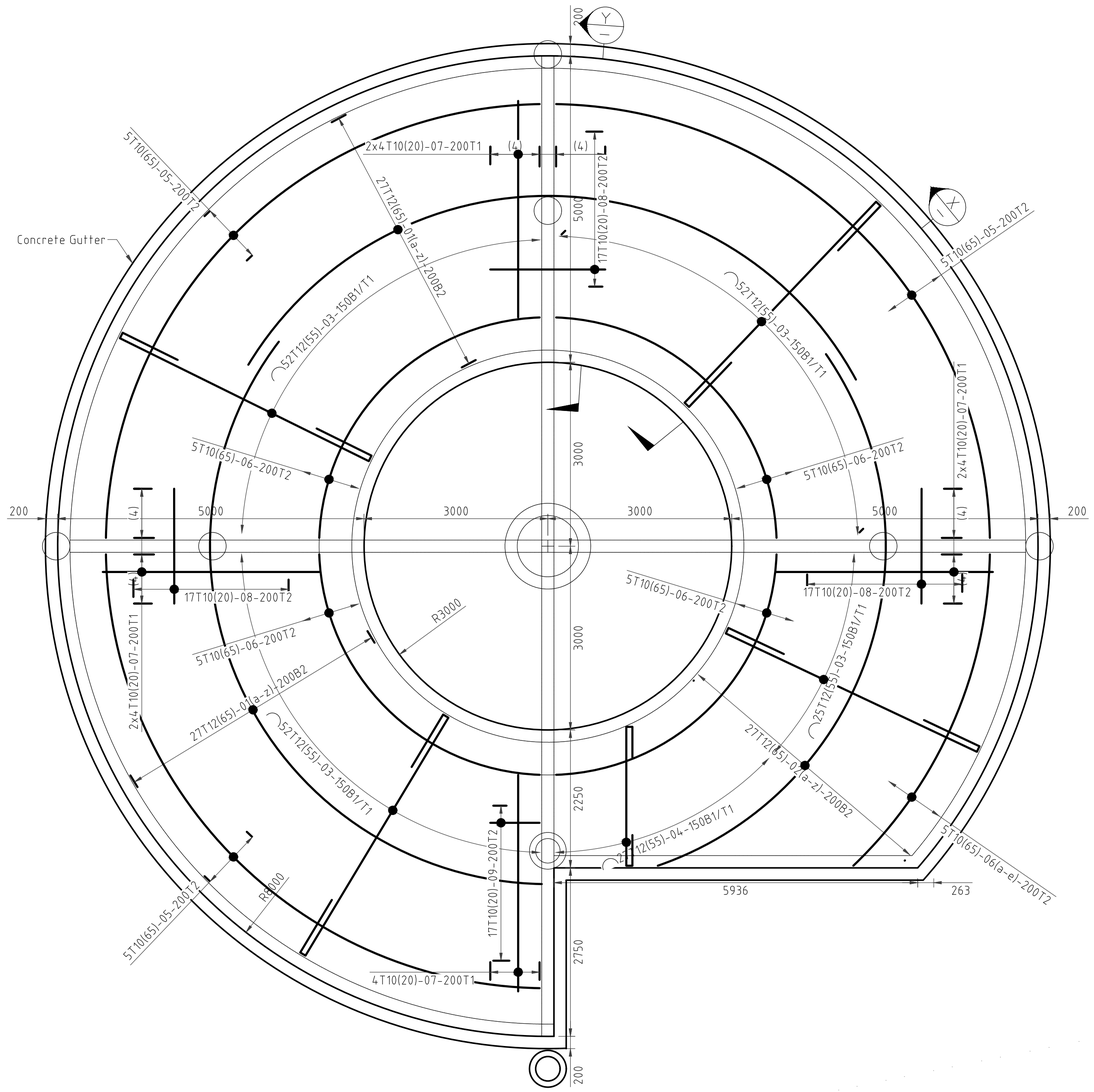

ROOF SLAB LAYOUT PLAN
SCALE 1:50

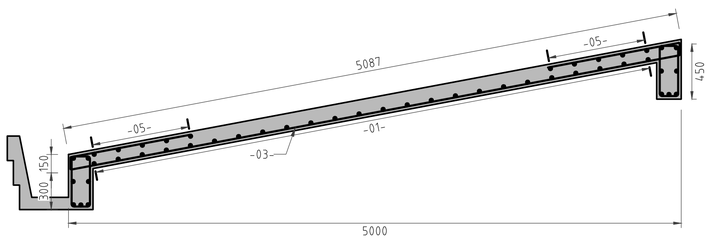

SECTION X-X
SCALE. 1:25

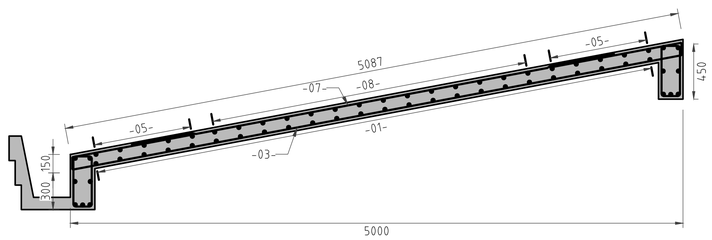

SECTION Y-Y
SCALE. 1:25

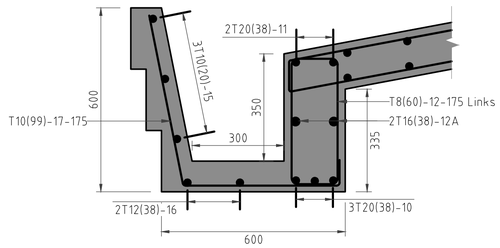

ROOF BEAM-2 & CONCRETE CGUTTER REINFORCEMENT DETAILS
SCALE. 1:10

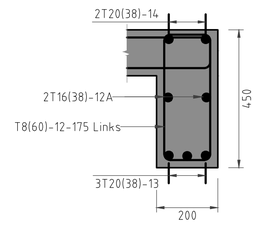

ROOF BEAM-3 REINFORCEMENT DETAILS
SCALE. 1:10

CLIENT:

Kenya National Highways Authority
Quality Highways, Better Connections

KENYA NATIONAL HIGHWAY AUTHORITY
Barabara Plaza,
Off Airport South Road,
P. O. Box, 49712 - 00100,
NAIROBI.

KENYA URBAN ROADS AUTHORITY
Barabara Plaza,
Off Airport South Road,
P. O. Box, 49712 - 00100,
NAIROBI.

FINANCIER:

THE WORLD BANK

PROJECT:

HORN OF AFRICA GATEWAY DEVELOPMENT PROJECT (HOAGDP): -

Consultancy Services for the Design and Works Supervision for the Proposed Extension of Meru Bypass.

CONTRACT NO:

KeNHA/RD/CS/D/4205/2024

CONSULTANT:

egis

One Padmore Place 6th Floor,
George Padmore Road,
P. O. Box, 76672 - 00508,
NAIROBI.

DESIGN DETAILS

Action	Name	Date
Designed By:	I.O	AUG 2025
Drawn By:	W.O	AUG 2025
Checked By:	S.I	AUG 2025
Approved By:	S.O	AUG 2025

DRAWING REVISIONS

No.	Revision Details	Reviewed	Initials	Date	Approved
		By			
		Checked			
		By			
		Checked			
		By			
		Checked			
		By			
		Checked			
		By			
		Checked			

DRAWING TITLE:

RAMP ROOF SLAB LAYOUT PLAN AND REINFORCEMENT DETAILS

DRAWING SCALE:

AS SHOWN

DRAWING NO:

TYP - FB2-024

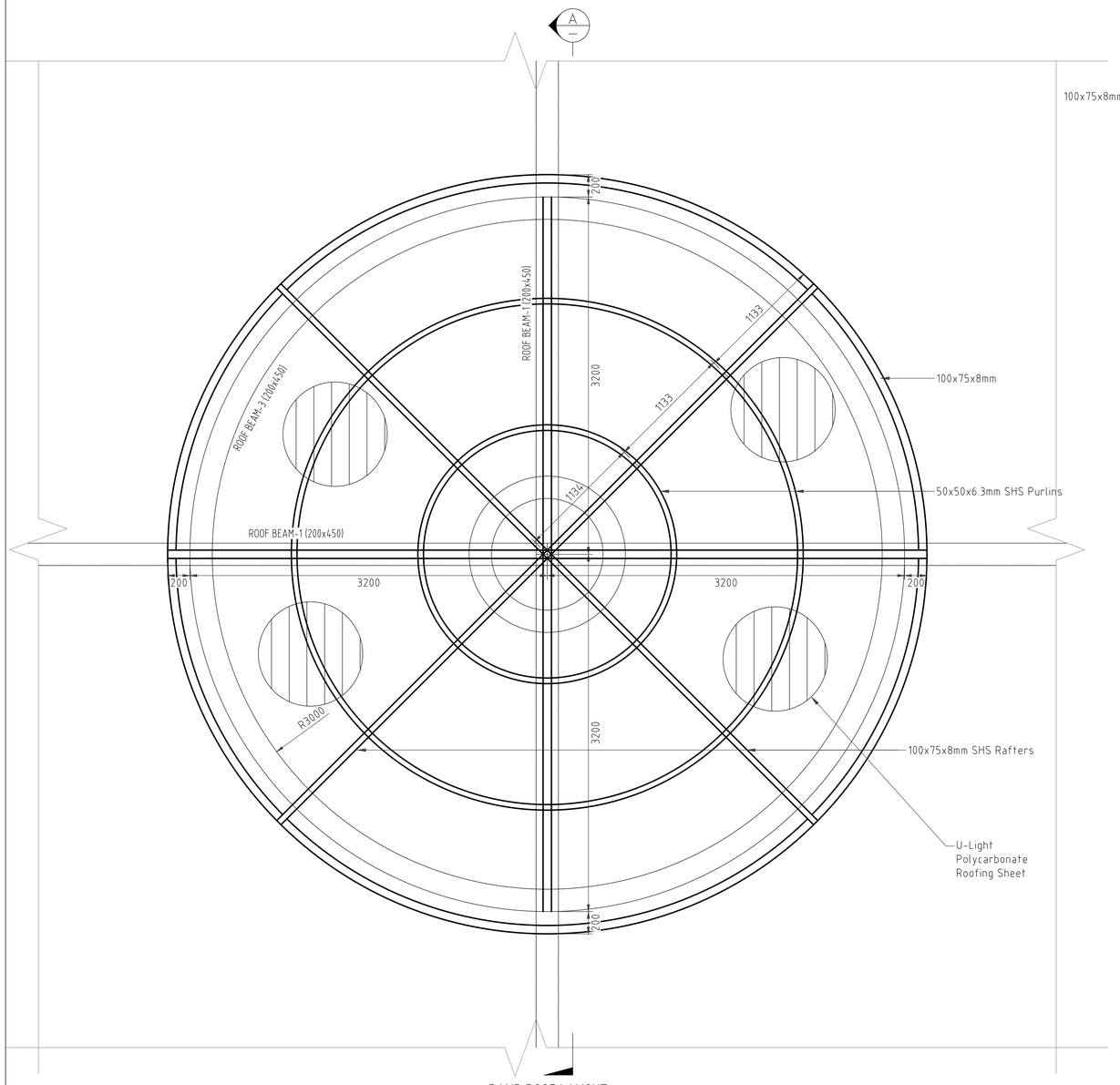

RAMP ROOF LAYOUT
SCALE: 1:25

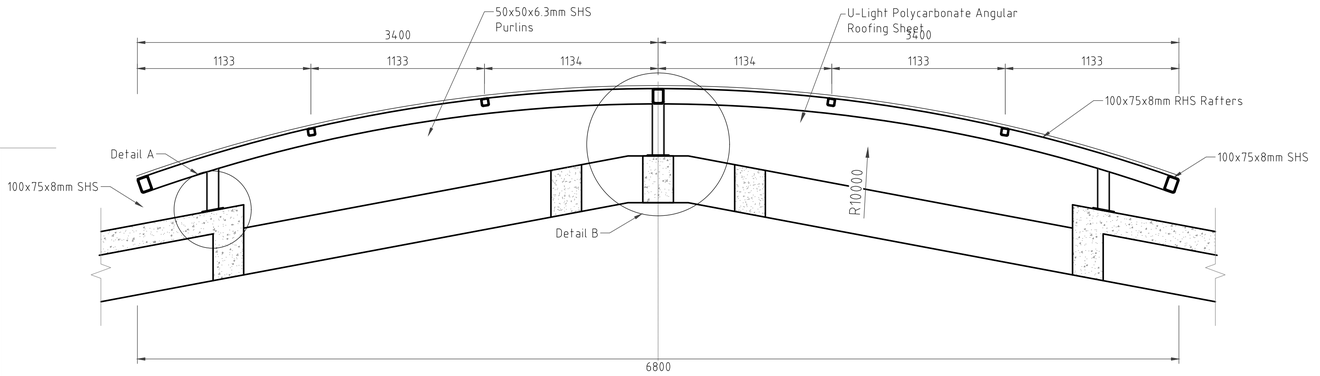

SECTION A-A
SCALE: 1:20

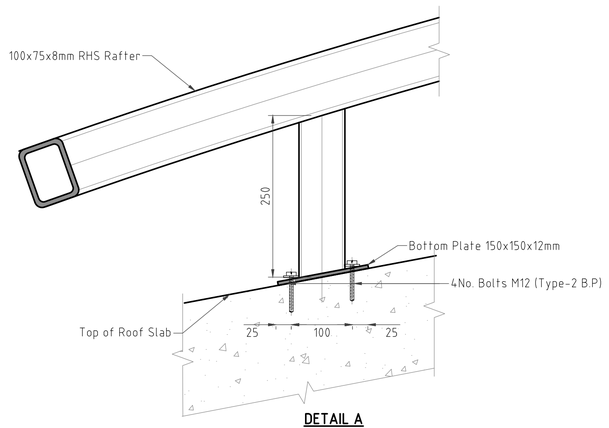

DETAIL A
SCALE: 1:5

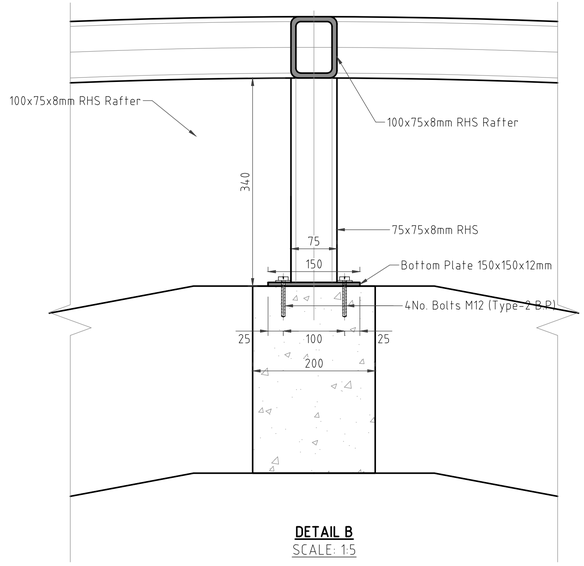

DETAIL B
SCALE: 1:5

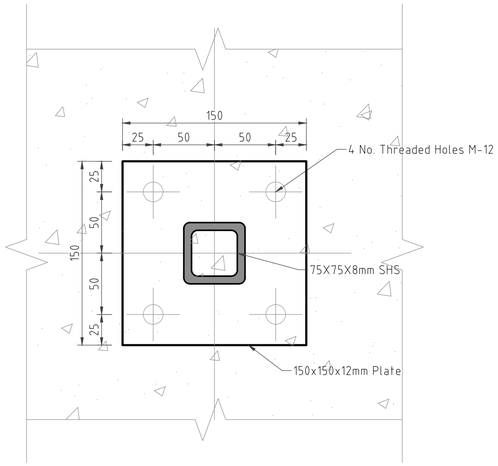

BOTTOM PLATE PLAN
SCALE: 1:2.5

CLIENT:

Kenya National Highways Authority
Quality Highways, Better Connections

KENYA NATIONAL HIGHWAY AUTHORITY
Barabara Plaza,
Off Airport South Road,
P. O. Box, 49712 - 00100,
NAIROBI.

KENYA URBAN ROADS AUTHORITY
KURA

KENYA URBAN ROADS AUTHORITY
Barabara Plaza,
Off Airport South Road,
P. O. Box, 49712 - 00100,
NAIROBI.

FINANCIER:

THE WORLD BANK

PROJECT:

HORN OF AFRICA GATEWAY DEVELOPMENT PROJECT (HOAGDP): -

Consultancy Services for the Design and Works Supervision for the Proposed Extension of Meru Bypass.

CONTRACT NO:

KeNHA/RD/CS/D/4205/2024

CONSULTANT:

egis

One Padmore Place 6th Floor,
George Padmore Road,
P. O. Box, 76672 - 00508,
NAIROBI.

DESIGN DETAILS

Action	Name	Date
Designed By:	LO	AUG 2025
Drawn By:	W.O	AUG 2025
Checked By:	S.I	AUG 2025
Approved By:	S.O	AUG 2025

DRAWING REVISIONS

No.	Revision Details	Reviewed	Initials	Date	Approved
		By			
		Checked			
		By			
		Checked			
		By			
		Checked			
		By			
		Checked			
		By			
		Checked			

DRAWING TITLE:

RAMP ROOF LAYOUT AND DETAILS

DRAWING SCALE:

AS SHOWN

DRAWING NO:

TYP - FB2-025

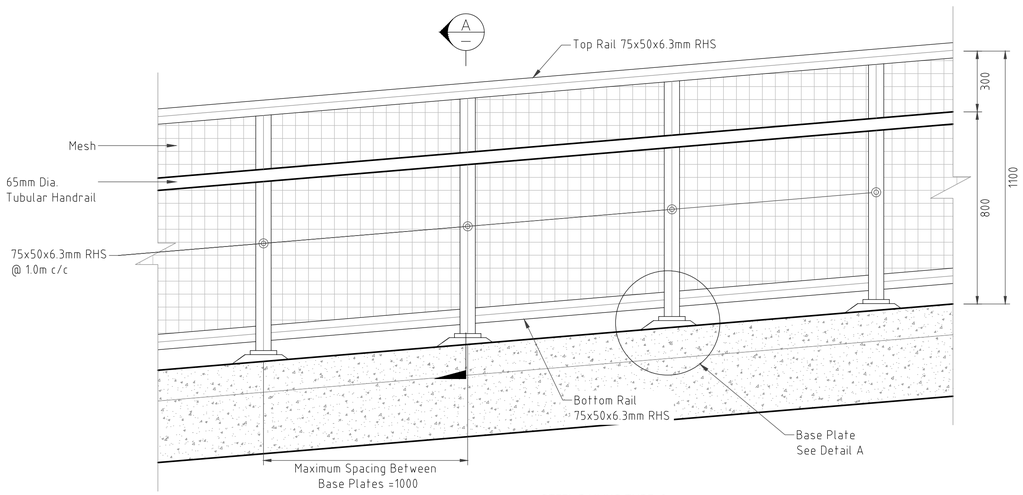

STEEL RAILING TYPE-2
SCALE 1:15

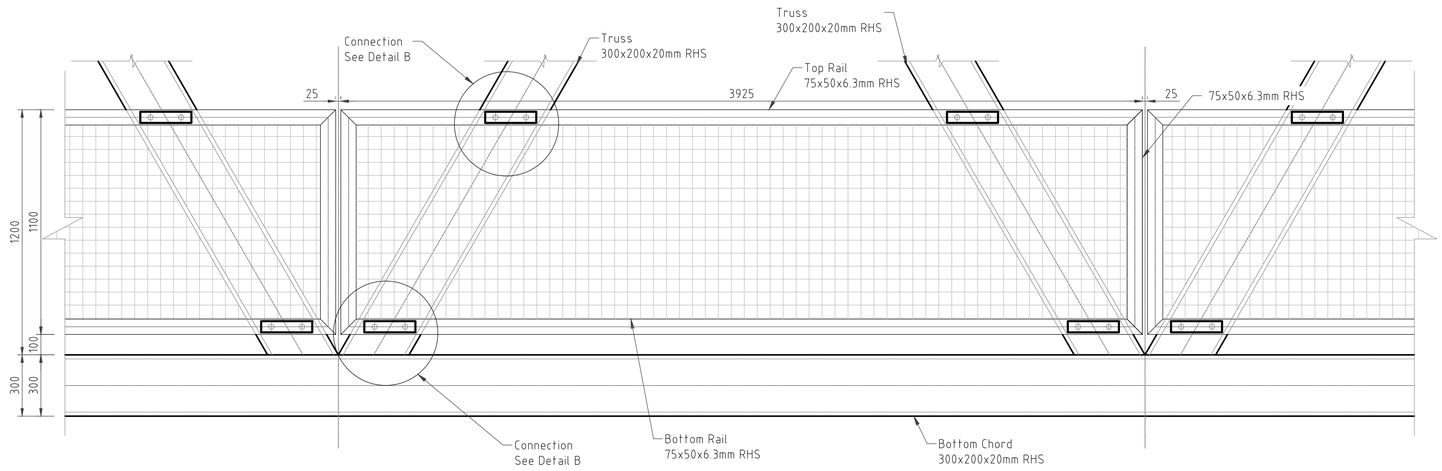

STEEL RAILING TYPE-1
SCALE 1:15

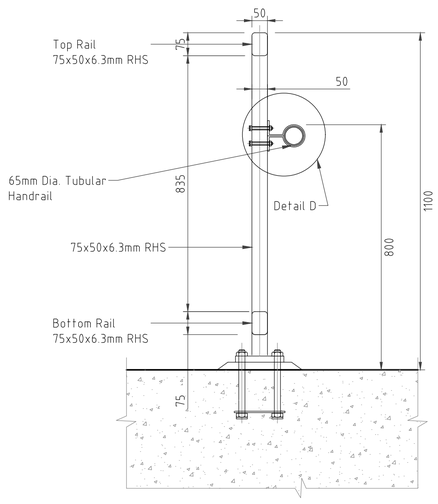

SECTION A-A
SCALE 1:10

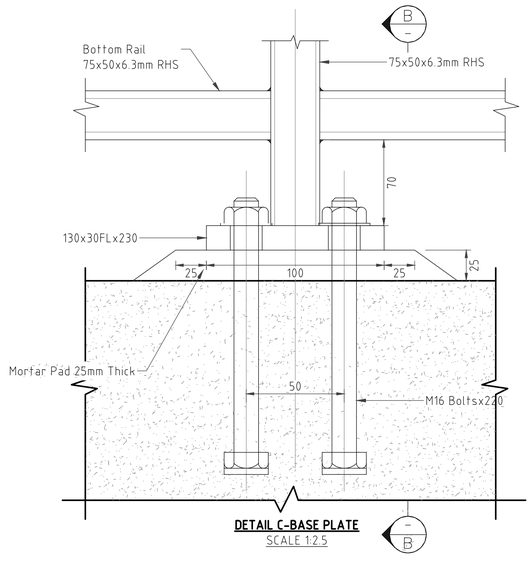

DETAIL C-BASE PLATE
SCALE 1:2.5

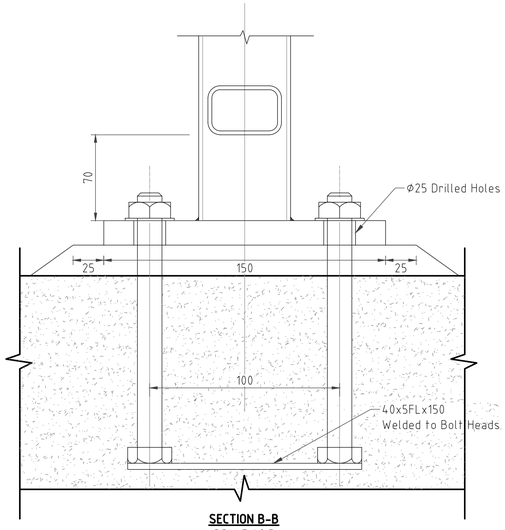

SECTION B-B
SCALE 1:2.5

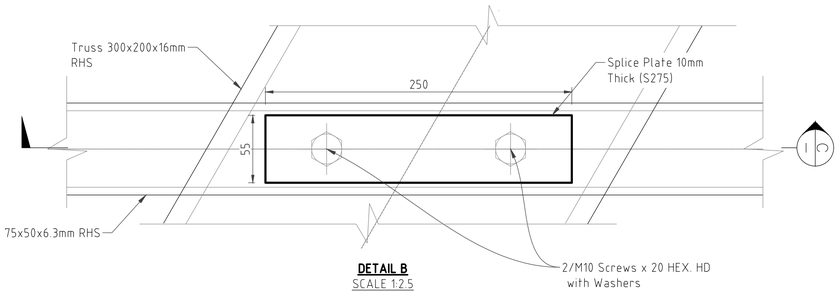

DETAIL B
SCALE 1:2.5

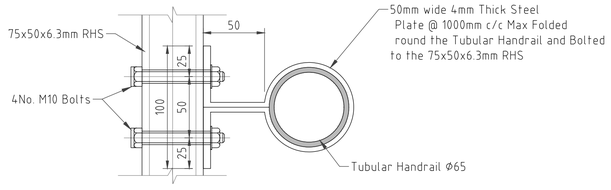

DETAIL C: HANDRAIL ANCHORAGE
SCALE 1:2.5

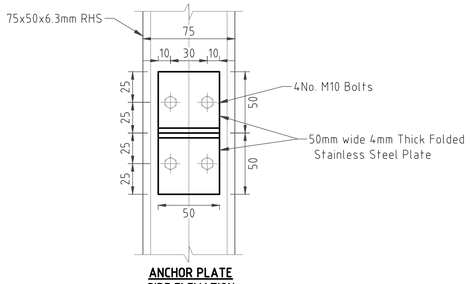

ANCHOR PLATE
SIDE ELEVATION
SCALE 1:2.5

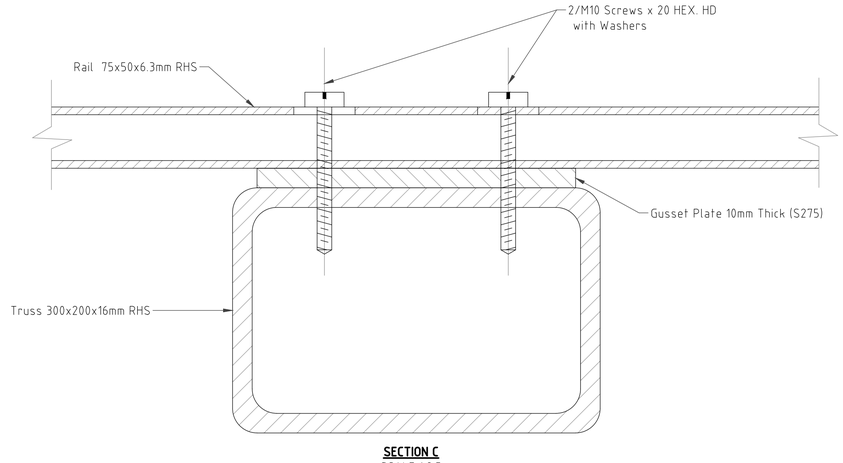

SECTION C
SCALE 1:2.5

CLIENT:

KENYA NATIONAL HIGHWAY AUTHORITY
Barabara Plaza,
Off Airport South Road,
P. O. Box, 49712 - 00100,
NAIROBI.

KENYA URBAN ROADS AUTHORITY
Barabara Plaza,
Off Airport South Road,
P. O. Box, 49712 - 00100,
NAIROBI.

FINANCIER:

THE WORLD BANK

PROJECT:

HORN OF AFRICA GATEWAY DEVELOPMENT PROJECT (HOAGDP): -

Consultancy Services for the Design and Works Supervision for the Proposed Extension of Meru Bypass.

CONTRACT NO:

KeNHA/RD/CS/D/4205/2024

CONSULTANT:

One Padmore Place 6th Floor,
George Padmore Road,
P. O. Box, 76672 - 00508,
NAIROBI.

DESIGN DETAILS		
Action	Name	Date
Designed By:	I.O	AUG 2025
Drawn By:	W.O	AUG 2025
Checked By:	S.I	AUG 2025
Approved By:	S.O	AUG 2025

DRAWING REVISIONS						
No.	Revision Details	Reviewed	Initials	Date	Approved
		By			
		Checked			
		By			
		Checked			
		By			
		Checked			
		By			
		Checked			
		By			
		Checked			

DRAWING TITLE:

STEEL HANDRAILING DETAILS

DRAWING SCALE:

AS SHOWN

DRAWING NO:

TYP - FB2-026

MERU BY-PASS ROADS

ARTISTIC REPRESENTATION OF FOOT BRIDGES



CLIENT:

KENYA NATIONAL HIGHWAY AUTHORITY
Barabara Plaza,
Off Airport South Road,
P. O. Box, 49712 - 00100,
NAIROBI.

KENYA URBAN ROADS AUTHORITY
Barabara Plaza,
Off Airport South Road,
P. O. Box, 49712 - 00100,
NAIROBI.

FINANCIER:

THE WORLD BANK

PROJECT:

HORN OF AFRICA GATEWAY DEVELOPMENT PROJECT (HOAGDP): -

Consultancy Services for the Design and Works Supervision for the Proposed Extension of Meru Bypass.

CONTRACT NO:

KeNHA/RD/CS/D/4205/2024

CONSULTANT:

egis

One Padmore Place 6th Floor,
George Padmore Road,
P. O. Box, 76672 - 00508,
NAIROBI.

DESIGN DETAILS

Action	Name	Date
Designed By:	C.J	AUG 2025
Drawn By:	C.J	AUG 2025
Checked By:	S.I	AUG 2025
Approved By:	L.R	AUG 2025

DRAWING REVISIONS

No.	Revision Details	Reviewed	Initials	Date	Approved
		By			
		Checked			
		By			
		Checked			
		By			
		Checked			
		By			
		Checked			
		By			
		Checked			

DRAWING TITLE:

FOOT BRIDGES ARTISTIC IMPRESSIONS

DRAWING SCALE:

AS SHOWN

DRAWING NO:

TYP-IMP-001
(1 of 6)

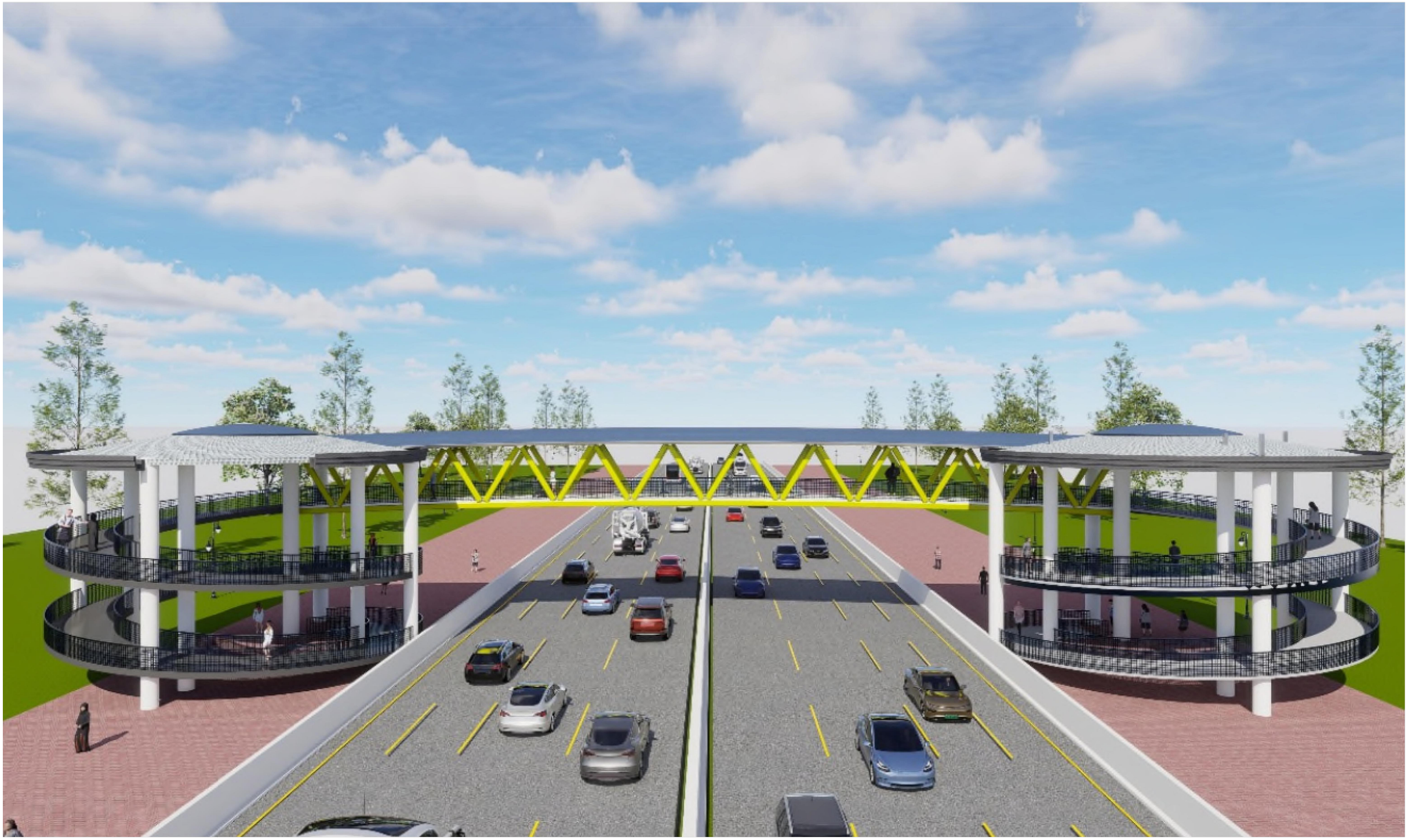

CLIENT:

KENYA NATIONAL HIGHWAY AUTHORITY
Barabara Plaza,
Off Airport South Road,
P. O. Box, 49712 - 00100,
NAIROBI.

KENYA URBAN ROADS AUTHORITY
Barabara Plaza,
Off Airport South Road,
P. O. Box, 49712 - 00100,
NAIROBI.

FINANCIER:

THE WORLD BANK

PROJECT:

HORN OF AFRICA GATEWAY DEVELOPMENT PROJECT (HOAGDP): -

Consultancy Services for the Design and Works Supervision for the Proposed Extension of Meru Bypass.

CONTRACT NO:

KeNHA/RD/CS/D/4205/2024

CONSULTANT:

egis

One Padmore Place 6th Floor,
George Padmore Road,
P. O. Box, 76672 - 00508,
NAIROBI.

DESIGN DETAILS

Action	Name	Date
Designed By:	C.J	AUG 2025
Drawn By:	C.J	AUG 2025
Checked By:	S.I	AUG 2025
Approved By:	L.R	AUG 2025

DRAWING REVISIONS

No.	Revision Details	Reviewed	Initials	Date	Approved
		By			
		Checked			
		By			
		Checked			
		By			
		Checked			
		By			
		Checked			
		By			
		Checked			

DRAWING TITLE:

FOOT BRIDGES ARTISTIC IMPRESSIONS

DRAWING SCALE:

AS SHOWN

DRAWING NO:

TYP-IMP-001
(2 of 6)



CLIENT:

KENYA NATIONAL HIGHWAY AUTHORITY
Barabara Plaza,
Off Airport South Road,
P. O. Box, 49712 - 00100,
NAIROBI.

KENYA URBAN ROADS AUTHORITY
Barabara Plaza,
Off Airport South Road,
P. O. Box, 49712 - 00100,
NAIROBI.

FINANCIER:

THE WORLD BANK

PROJECT:

HORN OF AFRICA GATEWAY DEVELOPMENT PROJECT (HOAGDP): -

Consultancy Services for the Design and Works Supervision for the Proposed Extension of Meru Bypass.

CONTRACT NO:

KeNHA/RD/CS/D/4205/2024

CONSULTANT:

egis

One Padmore Place 6th Floor,
George Padmore Road,
P. O. Box, 76672 - 00508,
NAIROBI.

DESIGN DETAILS

Action	Name	Date
Designed By:	C.J	AUG 2025
Drawn By:	C.J	AUG 2025
Checked By:	S.I	AUG 2025
Approved By:	L.R	AUG 2025

DRAWING REVISIONS

No.	Revision Details	Reviewed	Initials	Date	Approved
		By			
		Checked			
		By			
		Checked			
		By			
		Checked			
		By			
		Checked			
		By			
		Checked			

DRAWING TITLE:

FOOT BRIDGES ARTISTIC IMPRESSIONS

DRAWING SCALE:

AS SHOWN

DRAWING NO:

TYP-IMP-001
(3 of 6)



CLIENT:

KENYA NATIONAL HIGHWAY AUTHORITY
Barabara Plaza,
Off Airport South Road,
P. O. Box, 49712 - 00100,
NAIROBI.

KENYA URBAN ROADS AUTHORITY
Barabara Plaza,
Off Airport South Road,
P. O. Box, 49712 - 00100,
NAIROBI.

FINANCIER:

THE WORLD BANK

PROJECT:

HORN OF AFRICA GATEWAY DEVELOPMENT PROJECT (HOAGDP): -

Consultancy Services for the Design and Works Supervision for the Proposed Extension of Meru Bypass.

CONTRACT NO:

KeNHA/RD/CS/D/4205/2024

CONSULTANT:

egis

One Padmore Place 6th Floor,
George Padmore Road,
P. O. Box, 76672 - 00508,
NAIROBI.

DESIGN DETAILS

Action	Name	Date
Designed By:	C.J	AUG 2025
Drawn By:	C.J	AUG 2025
Checked By:	S.I	AUG 2025
Approved By:	L.R	AUG 2025

DRAWING REVISIONS

No.	Revision Details	Reviewed	Initials	Date	Approved
		By			
		Checked			
		By			
		Checked			
		By			
		Checked			
		By			
		Checked			
		By			
		Checked			

DRAWING TITLE:

FOOT BRIDGES ARTISTIC IMPRESSIONS

DRAWING SCALE:

AS SHOWN

DRAWING NO:

TYP-IMP-001
(4 of 6)

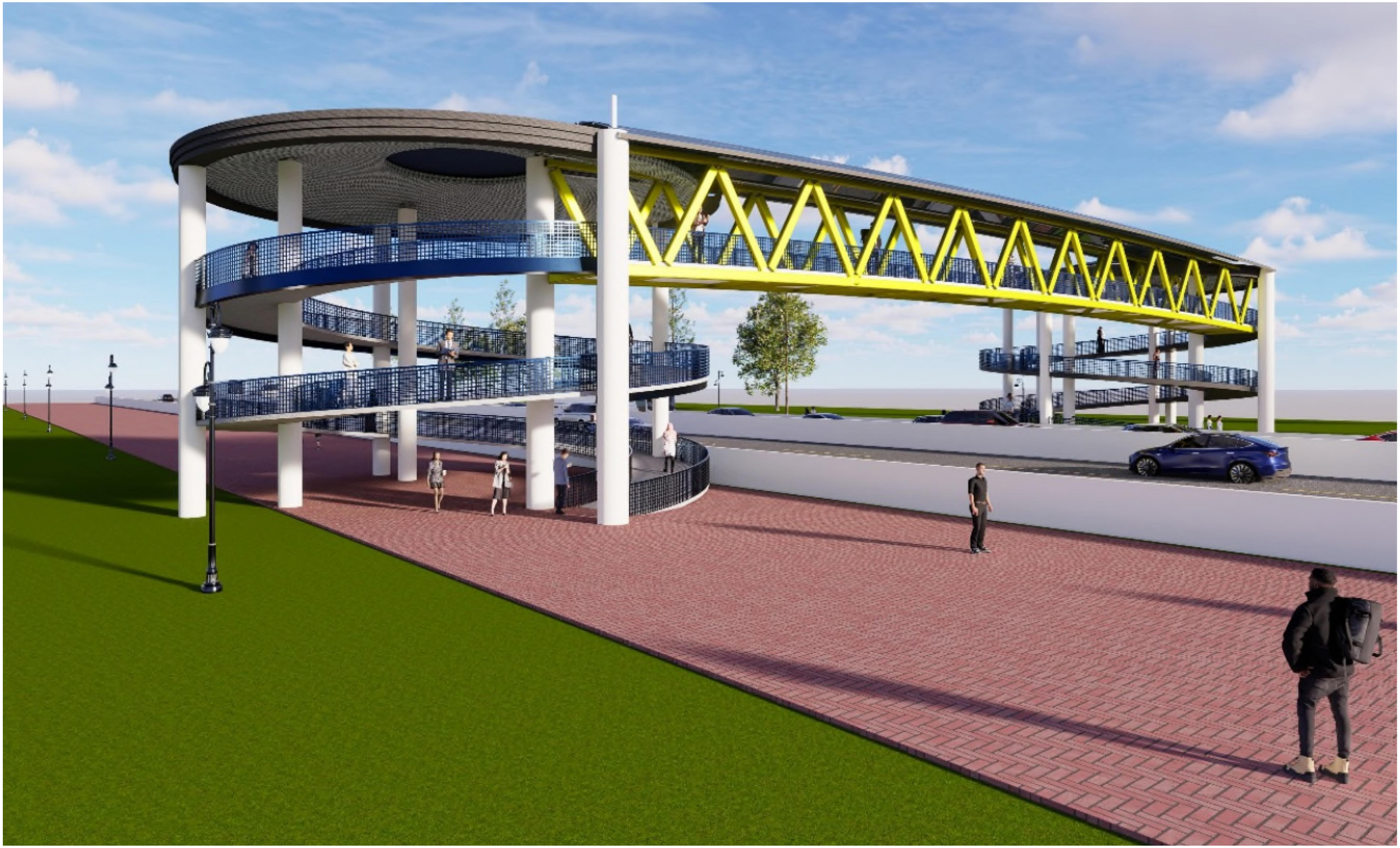

CLIENT:

KENYA NATIONAL HIGHWAY AUTHORITY
Barabara Plaza,
Off Airport South Road,
P. O. Box, 49712 - 00100,
NAIROBI.

KENYA URBAN ROADS AUTHORITY
Barabara Plaza,
Off Airport South Road,
P. O. Box, 49712 - 00100,
NAIROBI.

FINANCIER:

THE WORLD BANK

PROJECT:

HORN OF AFRICA GATEWAY DEVELOPMENT PROJECT (HOAGDP): -

Consultancy Services for the Design and Works Supervision for the Proposed Extension of Meru Bypass.

CONTRACT NO:

KeNHA/RD/CS/D/4205/2024

CONSULTANT:

egis

One Padmore Place 6th Floor,
George Padmore Road,
P. O. Box, 76672 - 00508,
NAIROBI.

DESIGN DETAILS

Action	Name	Date
Designed By:	C.J	AUG 2025
Drawn By:	C.J	AUG 2025
Checked By:	S.I	AUG 2025
Approved By:	L.R	AUG 2025

DRAWING REVISIONS

No.	Revision Details	Reviewed	Initials	Date	Approved
		By			
		Checked			
		By			
		Checked			
		By			
		Checked			
		By			
		Checked			
		By			
		Checked			

DRAWING TITLE:

FOOT BRIDGES ARTISTIC IMPRESSIONS

DRAWING SCALE:

AS SHOWN

DRAWING NO:

TYP-IMP-001
(5 of 6)



CLIENT:

KENYA NATIONAL HIGHWAY AUTHORITY
Barabara Plaza,
Off Airport South Road,
P. O. Box, 49712 - 00100,
NAIROBI.

KENYA URBAN ROADS AUTHORITY
Barabara Plaza,
Off Airport South Road,
P. O. Box, 49712 - 00100,
NAIROBI.

FINANCIER:

THE WORLD BANK

PROJECT:

HORN OF AFRICA GATEWAY DEVELOPMENT PROJECT (HOAGDP): -

Consultancy Services for the Design and Works Supervision for the Proposed Extension of Meru Bypass.

CONTRACT NO:

KeNHA/RD/CS/D/4205/2024

CONSULTANT:

egis

One Padmore Place 6th Floor,
George Padmore Road,
P. O. Box, 76672 - 00508,
NAIROBI.

DESIGN DETAILS

Action	Name	Date
Designed By:	C.J	AUG 2025
Drawn By:	C.J	AUG 2025
Checked By:	S.I	AUG 2025
Approved By:	L.R	AUG 2025

DRAWING REVISIONS

No.	Revision Details	Reviewed	Initials	Date	Approved
		By			
		Checked			
		By			
		Checked			
		By			
		Checked			
		By			
		Checked			
		By			
		Checked			

DRAWING TITLE:

FOOT BRIDGES ARTISTIC IMPRESSIONS

DRAWING SCALE:

AS SHOWN

DRAWING NO:

TYP-IMP-001
(6 of 6)

MERU BY-PASS ROADS

SCHEDULES

GUARDRAIL SCHEDULE

ALIGNMENT	GUARDRAIL RIGHT		GUARDRAIL LEFT		LENGTH
	FROM	TO	FROM	TO	
KAMBAKIA ROADS					
Hospital - kiramburine Rd	1+715.00	1+830.00			115.00
Hospital Link 1 Rd	0+223.00	0+241.00	0+223.00	0+241.00	36.00
Hospital Link 2 Gakoromone	0+268.00	0+288.00	0+268.00	0+288.00	40.00
Hospital Link 3 MEWAS	0+038.00	0+095.00	0+038.00	0+095.00	114.00
KAMBAKIA ROADS					
3 Steers - Kambakia	0+654.00	0+675.00	1+227.00	1+321.00	115.00
	0+734.00	0+748.00	1+357.00	1+452.00	109.00
	0+849.00	1+030.00	1+522.00	1+576.00	235.00
	1+562.00	1+610.00			48.00
Kambakia - Kagotone	0+485.00	0+605.00	0+485.00	0+605.00	240.00
	0+926.00	1+050.00	2+460.00	2+505.00	169.00
	1+284.00	1+409.00	2+610.00	2+665.00	180.00
	2+153.00	2+170.00	2+920.00	3+007.00	104.00
	2+202.00	2+315.00			113.00
	2+460.00	2+505.00			45.00
	2+594.00	2+714.00			120.00
	2+948.00	3+007.00			59.00
	3+212.00	3+250.00			38.00
Kagotone - KeMU	0+004.00	0+181.00			177.00
	0+290.00	0+300.00			10.00
Kongoacheke - Kwa Mukuru	0+456.00	0+529.00	0+004.00	0+047.00	116.00
	0+706.00	0+830.00	0+122.00	0+176.00	178.00
	2+123.00	2+172.00	0+456.00	0+545.00	138.00
			2+123.00	2+172.00	49.00
Kongo Gardens - Kambakia Link	0+170.00	0+232.00	0+173.00	0+223.00	112.00
RUNOGONE-KAITHE ROAD					
Runogone - Kaithe	1+125.00	1+195.00			70.00
WESTERN BYPASS ROAD					
Western Bypass Link			0+104.00	0+195.00	91.00
			0+500.00	0+580.00	80.00

GABION WALL SCHEDULE

ALIGNMENT	GABION RIGHT		GABION LEFT		LENGTH
	FROM	TO	FROM	TO	
KAMBAKIA ROADS					
3 Steers - Kambakia	0+849.00	0+886.00	0+895.00	0+971.00	0+113.00
	0+916.00	1+030.00	1+233.00	1+300.00	0+181.00
	1+562.00	1+590.00	1+360.00	1+450.00	0+118.00
			1+522.00	1+562.00	0+040.00
Kagotone - Kagotone	0+945.00	1+025.00	2+389.00	2+415.00	0+106.00
	1+316.00	1+410.00	2+915.00	2+993.00	0+172.00
	2+610.00	2+704.00			0+094.00
	3+145.00	3+195.00			0+050.00
	3+216.00	3+246.00			0+030.00
Kagotone - KeMU	0+004.00	0+034.00	0+240.00	0+308.00	0+098.00
	0+060.00	0+180.00			0+120.00
	0+290.00	0+300.00			0+010.00
Kongoacheke - Kwa Mukuru	0+706.00	0+827.00	0+005.00	0+037.00	0+153.00
	2+124.00	2+160.00	2+124.00	2+160.00	0+072.00
Kongo Gardens - Kambakia Link	0+175.00	0+221.00			0+046.00
RUNOGONE-KAITHE ROAD					
Runogone - Kaithe			1+249.00	1+295.00	46.00
WESTERN BYPASS ROAD					
Western Bypass Link			0+513.00	0+544.00	31.00
Gikumene - Mate			1+364.00	1+460.00	96.00

CLIENT:

KENYA NATIONAL HIGHWAY AUTHORITY
Barabara Plaza,
Off Airport South Road,
P. O. Box, 49712 - 00100,
NAIROBI.

KENYA URBAN ROADS AUTHORITY
Barabara Plaza,
Off Airport South Road,
P. O. Box, 49712 - 00100,
NAIROBI.

FINANCIER: THE WORLD BANK

PROJECT:
HORN OF AFRICA GATEWAY DEVELOPMENT PROJECT (HOAGDP): -

Consultancy Services for the Design and Works Supervision for the Proposed Extension of Meru Bypass.

CONTRACT NO:
KeNHA/RD/CS/D/4205/2024

CONSULTANT:

One Padmore Place 6th Floor,
George Padmore Road,
P. O. Box, 76672 - 00508,
NAIROBI.

DESIGN DETAILS

Action	Name	Date
Designed By:	S.A	AUG 2025
Drawn By:	J.M	AUG 2025
Checked By:	L.R	AUG 2025
Approved By:	S.O	AUG 2025

DRAWING REVISIONS

No.	Revision Details	Reviewed	Initials	Date	Approved
		By			
		Checked			
		By			
		Checked			
		By			
		Checked			
		By			
		Checked			
		By			
		Checked			

DRAWING TITLE:
SCHEDULE OF GUARDRAILS AND GABIONS

DRAWING SCALE:
AS SHOWN

DRAWING NO:
SCH-GDR/GAB-001

SCHEDULE OF ROAD MARKNING					
MERU BYPASS ROADS					
KEMU-KAMBAKIA ROADS					
3-STEERS-KAMBAKIA ROAD					
Start	**End**	**Length (m)**	**LHS**	**RCL**	**RHS**
0+000	0+075	75	1WB	1YB	1WB
0+075	0+093	18	1WB	3YB	4WB
0+093	0+242	149	1WB	3YB	1WB
0+242	0+262	20	1WB	3YB	4WB
0+262	0+431	169	1WB	3YB	1WB
0+431	0+451	20	4WB	3YB	1WB
0+451	0+520	69	1WB	3YB	1WB
0+520	0+528	8	4WB	3YB	1WB
0+528	0+535	7	4WB	3YB	4WB
0+535	0+547	12	1WB	3YB	4WB
0+547	0+583	36	1WB	3YB	1WB
0+583	0+586	3	4WB	3YB	1WB
0+586	0+599	13	4WB	3YB	4WB
0+599	0+606	7	1WB	3YB	4WB
0+606	0+748	142	1WB	1YB	1WB
0+748	0+771	23	4WB	3YB	1WB
0+771	0+811	40	1WB	1YB	1WB
0+811	0+831	20	4WB	3YB	1WB
0+831	0+942	111	1WB	1YB	1WB
0+942	0+962	20	4WB	3YB	1WB
0+962	1+021	59	1WB	1YB	1WB
1+021	1+036	15	4WB	3YB	1WB
1+036	1+046	10	1WB	1YB	1WB
1+046	1+061	15	4WB	3YB	1WB
1+061	1+250	189	1WB	1YB	1WB
1+250	1+410	160	1WB	3YB	1WB
1+410	1+425	15	1WB	3YB	4WB
1+425	1+520	95	1WB	1YB	1WB
1+520	1+560	40	1WB	1YB	4WB
1+560	1+582	22	1WB	1YB	1WB
1+582	1+600	18	1WB	3YB	4WB
1+600	1+675	75	1WB	1YB	1WB

SCHEDULE OF ROAD MARKNING					
MERU BYPASS ROADS					
Start	**End**	**Length (m)**	**LHS**	**RCL**	**RHS**
1+675	1+690	15	1WB	3YB	4WB
1+690	1+800	110	1WB	1YB	1WB
1+800	1+865	65	1WB	3YB	1WB
1+865	1+880	15	1WB	3YB	4WB
1+880	2+300	420	1WB	3YB	1WB
2+300	2+470	170	1WB	1YB	1WB
KAMBAKIA-KAGOTONE-KEMU C91 ROAD					
Start	**End**	**Length (m)**	**LHS**	**RCL**	**RHS**
0+000	0+100	100	1WB	3YB	1WB
0+100	0+219	119	1WB	1YB	1WB
0+219	0+224	5	1WB	3YB	4WB
0+224	0+237	13	4WB	3YB	4WB
0+237	0+400	163	1WB	3YB	1WB
0+400	0+690	290	1WB	3YB	1WB
0+690	0+703	13	1WB	3YB	4WB
0+703	0+708	5	4WB	3YB	4WB
0+708	0+718	10	4WB	3YB	1WB
0+718	0+732	14	1WB	3YB	1WB
0+732	0+777	45	5WB	3YB	1WB
0+777	0+900	123	1WB	1YB	1WB
0+900	1+225	325	1WB	3YB	1WB
1+225	1+245	20	1WB	3YB	4WB
1+245	1+400	155	1WB	1YB	1WB
1+400	1+523	123	1WB	3YB	1WB
1+523	1+600	77	1WB	1YB	1WB
1+600	1+618	18	1WB	3YB	4WB
1+618	1+863	245	1WB	1YB	1WB
1+863	2+171	308	1WB	3YB	1WB
2+171	2+202	31	1WB	1YB	1WB
2+202	2+215	13	1WB	3YB	4WB
2+215	2+700	485	1WB	3YB	1WB
2+700	3+050	350	1WB	1YB	1WB

CLIENT:

KENYA NATIONAL HIGHWAY AUTHORITY
Barabara Plaza,
Off Airport South Road,
P. O. Box, 49712 - 00100,
NAIROBI.

KENYA URBAN ROADS AUTHORITY
Barabara Plaza,
Off Airport South Road,
P. O. Box, 49712 - 00100,
NAIROBI.

FINANCIER:

THE WORLD BANK

PROJECT:

HORN OF AFRICA GATEWAY DEVELOPMENT PROJECT (HOAGDP): -

Consultancy Services for the Design and Works Supervision for the Proposed Extension of Meru Bypass.

CONTRACT NO:

KeNHA/RD/CS/D/4205/2024

CONSULTANT:

One Padmore Place 6th Floor,
George Padmore Road,
P. O. Box, 76672 - 00508,
NAIROBI.

DESIGN DETAILS

Action	Name	Date
Designed By:	S.A	AUG 2025
Drawn By:	J.M	AUG 2025
Checked By:	L.R	AUG 2025
Approved By:	S.O	AUG 2025

DRAWING REVISIONS

No.	Revision Details	Reviewed	Initials	Date	Approved
		By			
		Checked			
		By			
		Checked			
		By			
		Checked			
		By			
		Checked			
		By			
		Checked			

DRAWING TITLE:

SCHEDULE OF ROAD MARKING

DRAWING SCALE:

AS SHOWN

DRAWING NO:

SCH-RM-001

SCHEDULE OF ROAD MARKNING					
MERU BYPASS ROADS					
3+050	3+200	150	1WB	3YB	1WB
3+200	3+317	117	4WB	1YB	1WB
KAGOTONE-KEMU LINK C91 ROAD					
0+000	0+349	349	1WB	1YB	1WB
KONGOACHEKE JCT - KWA MUKURU JCT					
Start	**End**	**Length (m)**	**LHS**	**RCL**	**RHS**
0+000	0+100	100	1WB	3YB	1WB
0+100	0+600	500	1WB	1YB	1WB
0+600	0+627	27	1WB	3YB	4WB
0+627	0+800	173	1WB	3YB	1WB
0+800	0+883	83	1WB	1YB	1WB
0+883	0+903	20	4WB	3YB	1WB
0+903	0+950	47	1WB	1YB	1WB
0+950	1+411	461	1WB	3YB	1WB
1+411	1+446	35	4WB	3YB	1WB
1+446	1+600	154	1WB	3YB	1WB
1+600	1+615	15	1WB	3YB	4WB
1+615	1+815	200	1WB	1YB	1WB
1+815	1+900	85	1WB	3YB	1WB
1+900	2+018	118	1WB	1YB	1WB
2+018	2+041	23	4WB	1YB	1WB
2+041	2+300	259	1WB	1YB	1WB
2+300	2+490	190	1WB	3YB	1WB
KONGO GARDENS-KAMBAKIA LINK ROAD					
Start	**End**	**Length (m)**	**LHS**	**RCL**	**RHS**
0+000	0+447	447	1WB	1YB	1WB
RUNOGONE-KAITHE ROAD					
Start	**End**	**Length (m)**	**LHS**	**RCL**	**RHS**
0+000	0+080	80	1WB	3YB	1WB
0+080	0+125	45	1WB	1YB	1WB
0+125	0+140	15	1WB	1YB	4WB
0+140	0+185	45	1WB	1YB	1WB

SCHEDULE OF ROAD MARKNING					
MERU BYPASS ROADS					
0+185	0+200	15	1WB	3YB	4WB
0+200	0+300	100	1WB	1YB	1WB
0+300	0+315	15	1WB	3YB	4WB
0+315	0+365	50	1WB	1YB	1WB
0+365	0+400	35	1WB	1YB	4WB
0+400	0+740	340	1WB	1YB	1WB
0+740	0+755	15	1WB	1YB	4WB
0+755	0+994	239	1WB	1YB	1WB
0+994	1+009	15	1WB	1YB	4WB
1+009	1+760	751	1WB	1YB	1WB
HOSPITAL ROADS					
HOSPITAL ROAD - KIRAMBURINE JCT					
Start	**End**	**Length (m)**	**LHS**	**RCL**	**RHS**
0+000	0+030	30	1WB	1YB	1WB
0+030	0+045	15	4WB	3YB	1WB
0+045	0+230	185	1WB	1YB	1WB
0+230	0+245	15	4WB	3YB	1WB
0+245	0+420	175	1WB	3YB	1WB
0+420	0+540	120	1WB	1YB	1WB
0+540	0+555	15	4WB	1YB	1WB
0+555	0+780	225	1WB	3YB	1WB
0+780	0+795	15	1WB	3YB	4WB
0+795	0+880	85	1WB	3YB	1WB
0+880	1+075	195	1WB	1YB	1WB
1+075	1+090	15	1WB	1YB	4WB
1+090	1+120	30	1WB	1YB	1WB
1+120	1+140	20	1WB	1YB	4WB
1+140	1+220	80	1WB	3YB	1WB
1+220	1+235	15	1WB	3YB	4WB
1+235	1+580	345	1WB	3YB	1WB
1+580	1+680	100	1WB	1YB	1WB
1+680	1+710	30	1WB	1YB	4WB
1+710	1+715	5	1WB	1YB	4WB
1+715	1+938	223	1WB	3YB	1WB

CLIENT:

KENYA NATIONAL HIGHWAY AUTHORITY
Barabara Plaza,
Off Airport South Road,
P. O. Box, 49712 - 00100,
NAIROBI.

KENYA URBAN ROADS AUTHORITY
Barabara Plaza,
Off Airport South Road,
P. O. Box, 49712 - 00100,
NAIROBI.

FINANCIER:

THE WORLD BANK

PROJECT:

HORN OF AFRICA GATEWAY DEVELOPMENT PROJECT (HOAGDP): -

Consultancy Services for the Design and Works Supervision for the Proposed Extension of Meru Bypass.

CONTRACT NO:

KeNHA/RD/CS/D/4205/2024

CONSULTANT:

One Padmore Place 6th Floor,
George Padmore Road,
P. O. Box, 76672 - 00508,
NAIROBI.

DESIGN DETAILS		
Action	**Name**	**Date**
Designed By:	S.A	AUG 2025
Drawn By:	J.M	AUG 2025
Checked By:	L.R	AUG 2025
Approved By:	S.O	AUG 2025

DRAWING REVISIONS					
No.	**Revision Details**	**Reviewed**	**Initials**	**Date**	**Approved**
		By			
		Checked			
		By			
		Checked			
		By			
		Checked			
		By			
		Checked			
		By			
		Checked			

DRAWING TITLE:

SCHEDULE OF ROAD MARKING

DRAWING SCALE:

AS SHOWN

DRAWING NO:

SCH-RM-002

SCHEDULE OF ROAD MARKNING					
MERU BYPASS ROADS					
LINK 1-MERU BUS TERMINUS					
Start	**End**	**Length (m)**	**LHS**	**RCL**	**RHS**
0+000	0+054	54	1WB	1YB	1WB
0+054	0+069	15	4WB	1YB	4WB
0+069	0+235	166	1WB	1YB	1WB
0+235	0+250	15	1WB	1YB	4WB
0+250	0+360	110	1WB	1YB	1WB
0+360	0+375	15	4WB	1YB	1WB
0+375	0+465	90	1WB	1YB	1WB
LINK 2-GAKOROMONE MARKET					
Start	**End**	**Length (m)**	**LHS**	**RCL**	**RHS**
0+000	0+115	115	1WB	1YB	1WB
0+115	0+130	15	1WB	1YB	4WB
0+130	0+195	65	1WB	1YB	1WB
0+195	0+215	20	1WB	1YB	4WB
0+215	0+330	115	1WB	1YB	1WB
0+330	0+345	15	1WB	1YB	4WB
0+345	0+400	55	1WB	1YB	1WB
0+400	0+420	20	4WB	1YB	4WB
0+420	0+475	55	1WB	1YB	1WB
0+475	0+495	20	1WB	1YB	4WB
0+495	0+642	147	1WB	1YB	1WB
LINK 3-MEWAS JCT					
Start	**End**	**Length (m)**	**LHS**	**RCL**	**RHS**
0+000	0+260	260	1WB	1YB	1WB
0+260	0+285	25	4WB	1YB	1WB
0+285	0+341	56	1WB	1YB	1WB

SCHEDULE OF ROAD MARKNING					
MERU BYPASS ROADS					
WESTERN BYPASS-MATE ROADS					
WESTERN BYPASS-LINK ROAD					
Start	**End**	**Length (m)**	**LHS**	**RCL**	**RHS**
0+000	0+247	247	1WB	3YB	1WB
0+247	0+292	45	1WB	3YB	5WB
0+292	0+293	1	5WB	3YB	1WB
0+293	0+520	227	1WB	3YB	1WB
0+520	0+706	186	1WB	1YB	1WB
GIKUMENE JCT-MATE ROAD					
Start	**End**	**Length (m)**	**LHS**	**RCL**	**RHS**
0+000	0+175	175	1WB	3YB	1WB
0+175	0+700	525	1WB	1YB	1WB
0+700	0+875	175	1WB	3YB	1WB
0+875	1+000	125	1WB	1YB	1WB
1+000	1+200	200	1WB	3YB	1WB
1+200	1+550	350	1WB	1YB	1WB
1+550	1+580	30	1WB	3YB	1WB
1+580	1+625	45	1WB	3YB	5WB
1+625	1+700	75	1WB	3YB	1WB
1+700	1+735	35	4WB	3YB	1WB
1+735	1+814	79	1WB	3YB	1WB
1+814	1+859	45	5WB	3YB	1WB
1+859	2+020	161	1WB	1YB	1WB
2+020	2+597	577	1WB	3YB	1WB

CLIENT:

Kenya National Highways Authority
Quality Highways, Better Connections

KENYA NATIONAL HIGHWAY AUTHORITY
Barabara Plaza,
Off Airport South Road,
P. O. Box, 49712 - 00100,
NAIROBI.

KENYA URBAN ROADS AUTHORITY
Barabara Plaza,
Off Airport South Road,
P. O. Box, 49712 - 00100,
NAIROBI.

FINANCIER:

THE WORLD BANK

PROJECT:

HORN OF AFRICA GATEWAY DEVELOPMENT PROJECT (HOAGDP): -

Consultancy Services for the Design and Works Supervision for the Proposed Extension of Meru Bypass.

CONTRACT NO:

KeNHA/RD/CS/D/4205/2024

CONSULTANT:

egis

One Padmore Place 6th Floor,
George Padmore Road,
P. O. Box, 76672 - 00508,
NAIROBI.

DESIGN DETAILS

Action	Name	Date
Designed By:	S.A	AUG 2025
Drawn By:	J.M	AUG 2025
Checked By:	L.R	AUG 2025
Approved By:	S.O	AUG 2025

DRAWING REVISIONS

No.	Revision Details	Reviewed	Initials	Date	Approved
		By			
		Checked			
		By			
		Checked			
		By			
		Checked			
		By			
		Checked			
		By			
		Checked			

DRAWING TITLE:

SCHEDULE OF ROAD MARKING

DRAWING SCALE:

AS SHOWN

DRAWING NO:

SCH-RM-003

SCHEDULE OF CULVERTS DRAINAGE STRUCTURES

Id No	Station	Existing Cross Drainage Structure					Proposed Cross Drainage Structure						
		TYPE	No Cell	W	H	D	TYPE	No Cell	W	H	D	Length of Culvert	Culvert Fill Height
	km			m	m	m			m	m	m	m	m
CROSS DRAINAGE STRUCTURES LIST FOR KEMU-KAMBAKIA ROAD													
3 STEERS-KAMBAKIA ROAD													
1	0+000						RCP	1			0.90	12.50	0.64
2	0+297	RCP	1			0.45	RCP	1			1.20	11.50	1.15
3	0+440						RCP	1	4.0	2.0		12.00	0.32
4	1+021	RCP	1				BC	1	3.0	2.0		13.50	1.82
5	1+287						RCP	1			0.90	13.00	0.61
6	1+546						BC	2	5.0	2.0		20.00	2.88
KAMBAKIA-KAGOTONE/KEMU C91 ROAD													
7	0+018	RCP	1			0.6	RCP	1			0.90	41.00	0.73
8	0+185	RCP	1			0.6	RCP	1			0.90	16.60	0.69
9	0+577	RCP	2			0.6	BC	1	3.0	2.0		18.70	2.00
10	1+001						RCP	2			1.20	13.00	1.52
11	1+386	RPC	1			0.6	RCP	2			1.20	18.70	3.40
12	2+193	RPC	1			0.6	RCP	1			0.90	18.90	0.70
13	2+651						BC	1	3.0	2.0		17.70	8.35
14	3+002						RCP	1			0.90	15.60	0.85
15	3+233	SPC	1			1.5	BC	2	5.0	2.0		15.50	2.53
KAGOTONE-KEMU LINK C91 ROAD													
16	0+017						RCP	1			0.90	22.32	1.84
17	0+095	SPC	1			1.5	RCP	2			1.20	17.90	1.67
KONGOACHEKE JCT-KWA MUKURU JCT													
18	0+498						RCP	1			0.90	15.95	1.59
19	0+790						RCP	1			0.90	19.82	2.79
20	2+170	RCP	1			0.6	RCP	1			0.90	16.98	1.78
21	2+475	RCP	2			0.4	RCP	1			0.90	23.48	0.71
KONGO GARDENS-KAMBAKIA LINK ROAD													
22	0+012						PC	1			0.90	13.98	0.64
23	0+195	RPC	3			0.6	BC	2	5.0	2.0		12.06	0.27
24	0+320	RPC	1			0.6	RCP	1			0.90	10.55	0.69
CROSS DRAINAGE STRUCTURES LIST FOR RUNOGONE-KAITHE ROAD													
1	0+012						RCP	1			0.9	15.47	0.90
2	1+734						RCP	1			0.9	31.92	0.70

SCHEDULE OF CULVERTS DRAINAGE STRUCTURES

Id No	Station	Existing Cross Drainage Structure					Proposed Cross Drainage Structure						
		TYPE	No Cell	W	H	D	TYPE	No Cell	W	H	D	Length of Culvert	Culvert Fill Height
	km			m	m	m			m	m	m	m	m
CROSS DRAINAGE STRUCTURES LIST FOR HOSPITAL ROADS													
HOSPITAL ROAD-KIRAMBURINE JCT													
1	0+481						RCP	1			1.2	15.00	1.34
2	1+080						RCP	1			1.2	14.04	0.72
3	1+799						RCP	1			1.2	13.94	0.74
4	1+923						RCP	1			1.2	26.66	0.67
LINK 1.MERU BUS TERMINUS													
5	0+006						RCP	1			0.9	12.54	0.69
6	0+236						BC	1	4.0	2.5		19.34	2.34
LINK 2-GAKOROMONE MARKET													
7	0+009						RCP	1			0.9	15.56	0.62
8	0+284						BC	1	4.0	2.5		18.09	3.95
9	0+630						RCP	1			0.9		0.65
LINK 3-MEWAS JCT													
10	0+021						RCP	1			0.9	14.63	1.04
11	0+079						BC	1	4.0	2.5		15.25	1.77
12	0+323						RCP	1			0.90	12.47	0.66
CROSS DRAINAGE STRUCTURES LIST FOR WESTERN BYPASS-MATE ROAD													
WESTERN BYPASS-LINK ROAD													
1	0+165						RCP	1			1.2	14.10	1.08
2	0+534						RCP	1			1.2	13.31	1.17
3	0+696						RCP	1			0.9	19.58	0.65
GIKUMENE JCT-MATE ROAD													
4	0+843						RCP	1			1.2	17.90	0.67
5	2+160	RCP	1				RCP	1			1.2	22.81	0.67
6	2+587						RCP	1			1.2	35.02	0.75

CLIENT:

KENYA NATIONAL HIGHWAY AUTHORITY
Barabara Plaza,
Off Airport South Road,
P. O. Box, 49712 - 00100,
NAIROBI.

KENYA URBAN ROADS AUTHORITY
Barabara Plaza,
Off Airport South Road,
P. O. Box, 49712 - 00100,
NAIROBI.

FINANCIER: THE WORLD BANK

PROJECT:
HORN OF AFRICA GATEWAY DEVELOPMENT PROJECT (HOAGDP): -

Consultancy Services for the Design and Works Supervision for the Proposed Extension of Meru Bypass.

CONTRACT NO:
KeNHA/RD/CS/D/4205/2024

CONSULTANT:
egis
One Padmore Place 6th Floor,
George Padmore Road,
P. O. Box, 76672 - 00508,
NAIROBI.

DESIGN DETAILS

Action	Name	Date
Designed By:	S.A	AUG 2025
Drawn By:	J.M	AUG 2025
Checked By:	L.R	AUG 2025
Approved By:	S.O	AUG 2025

DRAWING REVISIONS

No.	Revision Details	Reviewed	Initials	Date	Approved
		By			
		Checked			
		By			
		Checked			
		By			
		Checked			
		By			
		Checked			
		By			
		Checked			

DRAWING TITLE:
SCHEDULE OF CULVERTS

DRAWING SCALE:
AS SHOWN

DRAWING NO:
SCH-CUL-001

MERU-BYPASS ROADS - SIGNS SCHEDULE				
KEMU-KAMBAKIA ROADS				
3 Steers-Kambakia Road				
No.	**Sign**	**Chainage (mm)**	**Position**	**Area (m2)**
1	I.30	0+000	RHS	0.36
2	R2	0+000	RHS	0.24
3	W17	0+040	RHS	0.24
4	I.3	0+060	RHS	1.5
5	W2	0+960	LHS	0.24
6	W36	1+010	LHS	0.58
7	I.27	1+020	LHS	0.63
8	I.27	1+030	RHS	0.63
9	W36	1+060	LHS	0.58
10	W1	1+100	LHS	0.24
11	I.41	1+490	RHS	0.48
12	I.9	1+500	LHS	0.6
13	I.13	1+540	LHS	1.34
14	I.9	1+570	RHS	0.6
15	W6	1+590	LHS	0.24
16	W1	1+590	LHS	0.24
17	W2	1+710	RHS	0.24
18	W5	1+900	RHS	0.24
19	W17	2+400	LHS	0.24
20	I.30	2+450	LHS	0.36
21	R1	2+450	LHS	0.47
Kambakai-Kagotone/Kemu C91 Road				
SN/No.	**Sign**	**Chainage (mm)**	**Position**	**Area (m2)**
22	I.30	0+000	RHS	0.36
23	R2	0+000	RHS	0.24
24	W17	0+060	RHS	0.24
25	I.3	0+100	RHS	1.5
26	W1	0+100	LHS	0.24
27	W2	0+260	RHS	0.24
28	I.3	0+330	LHS	1.5
29	I.9	0+400	LHS	0.61
30	I.13	0+430	LHS	1.5
31	I.9	0+450	RHS	0.61
32	W5	0+480	LHS	0.24
33	W6	0+600	RHS	0.24
34	I.41	0+650	RHS	0.48
35	I.41	0+750	LHS	0.48
36	W5	0+800	LHS	0.24
37	W6	1+030	RHS	0.24
38	W5	1+160	LHS	0.24

MERU-BYPASS ROADS - SIGNS SCHEDULE				
39	W5	1+420	RHS	0.24
40	I.9	2+160	LHS	0.63
41	I.13	2+190	LHS	1.5
42	I.9	2+210	RHS	0.63
43	W5	2+320	LHS	0.24
44	W6	2+540	RHS	0.24
45	W26	2+550	LHS	0.24
46	W26	2+750	RHS	0.24
47	W2	2+880	LHS	0.24
48	W1	3+090	RHS	0.24
49	W26	3+100	LHS	0.24
50	W12	3+110	LHS	0.24
51	W28	3+140	LHS	0.24
52	W2	3+160	LHS	0.24
53	I.9	3+200	LHS	0.37
54	I.13	3+230	RHS	1.34
55	I.9	3+250	RHS	0.37
56	I.3	3+250	LHS	1.5
57	W17	3+260	LHS	0.24
58	R2	3+280	LHS	0.24
59	I.30	3+290	LHS	0.36
60	I.11	3+317	ISLAND	1.5
Kagotone-Kemu Link C91 Road				
SN/No.	**Sign**	**Chainage (mm)**	**Position**	**Area (m2)**
61	I.30	0+000	RHS	0.36
62	R1	0+000	RHS	0.47
63	W17	0+310	LHS	0.24
64	I.30	0+330	LHS	0.36
65	R2	0+330	LHS	0.24
66	I.11	0+349	ISLAND	1.5
Kongoacheke Jct-Kwa Mukuru Jct				
SN/No.	**Sign**	**Chainage (mm)**	**Position**	**Area (m2)**
67	I.30	0+000	RHS	0.36
68	R1	0+000	RHS	0.47
69	W28	0+050	RHS	0.24
70	W28	0+540	LHS	0.24
71	W28	0+690	RHS	0.24
72	W12	0+750	LHS	0.24
73	W2	0+770	LHS	0.24
74	W12	0+970	RHS	0.24
75	W1	0+990	RHS	0.24
76	I.9	1+410	LHS	0.5
77	I.13	1+430	RHS	1.56
78	I.9	1+460	RHS	0.5

CLIENT:

Kenya National Highways Authority — Quality Highways, Better Connections

KENYA NATIONAL HIGHWAY AUTHORITY
Barabara Plaza,
Off Airport South Road,
P. O. Box, 49712 - 00100,
NAIROBI.

KENYA URBAN ROADS AUTHORITY
Barabara Plaza,
Off Airport South Road,
P. O. Box, 49712 - 00100,
NAIROBI.

FINANCIER:

THE WORLD BANK

PROJECT:

HORN OF AFRICA GATEWAY DEVELOPMENT PROJECT (HOAGDP): -

Consultancy Services for the Design and Works Supervision for the Proposed Extension of Meru Bypass.

CONTRACT NO:

KeNHA/RD/CS/D/4205/2024

CONSULTANT:

egis

One Padmore Place 6th Floor,
George Padmore Road,
P. O. Box, 76672 - 00508,
NAIROBI.

DESIGN DETAILS

Action	Name	Date
Designed By:	S.A	AUG 2025
Drawn By:	J.M	AUG 2025
Checked By:	L.R	AUG 2025
Approved By:	S.O	AUG 2025

DRAWING REVISIONS

No.	Revision Details	Reviewed	Initials	Date	Approved
		By			
		Checked			
		By			
		Checked			
		By			
		Checked			
		By			
		Checked			
		By			
		Checked			

DRAWING TITLE:

SCHEDULE OF ROAD SIGNS

DRAWING SCALE:

AS SHOWN

DRAWING NO:

SCH-RS-001

MERU-BYPASS ROADS - SIGNS SCHEDULE				
79	W5	1+970	LHS	0.24
80	W2	1+970	LHS	0.24
81	W1	2+100	RHS	0.24
82	W6	2+210	RHS	0.24
83	I.3	2+420	LHS	1.5
84	W17	2+440	LHS	0.24
85	R2	2+470	LHS	0.24
86	I.30	2+480	LHS	0.36
87	I.11	2+490	ISLAND	1.5
Allignment: KeMU-Kambakia Link Rd (Kongo Gardens)				
SN/No.	**Sign**	**Chainage (mm)**	**Position**	**Area (m2)**
88	I.30	0+000	RHS	0.36
89	R1	0+000	RHS	0.47
90	W17	0+060	RHS	0.24
91	W17	0+400	LHS	0.24
92	I.30	0+450	LHS	0.36
93	R1	0+450	LHS	0.47
RUNOGONE-KAITHE ROAD				
No.	**Sign Type**	**Chainage (mm)**	**Position**	**Area (m2)**
1	I.14	0+000	ISLAND	1.67
2	I.30	0+010	RHS	0.36
3	R1	0+020	RHS	0.47
4	W17	0+050	RHS	0.24
5	W1	0+330	LHS	0.24
6	W36	0+360	RHS	0.58
7	W36	0+400	RHS	0.58
8	I.41	0+450	RHS	0.28
9	W2	0+480	RHS	0.24
10	I.41	0+480	LHS	0.28
11	W5	1+190	LHS	0.24
12	W6	1+460	RHS	0.24
13	W5	1+520	LHS	0.24
14	I.3	1+690	LHS	1.76
15	W17	1+700	LHS	0.24
16	R1	1+730	LHS	0.47
17	W6	1+740	RHS	0.24
19	I.30	1+740	LHS	0.36
20	I.11	1+760	ISLAND	1.56
HOSPITAL ROADS				
Hospital Road-Kiramburine Junction				
SN/No.	**Sign**	**Chainage (mm)**	**Position**	**Area (m2)**
1	I.14	0+000	ISLAND	1.53
2	I.30	0+000	RHS	0.36
3	R1	0+010	RHS	0.47

MERU-BYPASS ROADS - SIGNS SCHEDULE				
4	W.17	0+050	RHS	0.24
5	W17	0+050	RHS	0.24
6	W2	0+400	LHS	0.24
7	W36	0+460	LHS	0.58
8	W36	0+580	RHS	0.58
9	W2	0+610	RHS	0.24
10	I.11	0+800	LHS	1.5
11	W2	1+030	LHS	0.24
12	I.11	1+120	LHS	1.5
13	W1	1+170	RHS	0.24
14	W2	1+570	LHS	0.24
15	W36	1+610	LHS	0.58
16	I.11	1+690	LHS	1.5
17	W1	1+750	RHS	0.24
18	W17	1+860	LHS	0.24
19	R1	1+920	LHS	0.47
20	I.30	1+920	LHS	0.36
21	I.11	1+938	ISLAND	1.7
Link 1- Meru Bus Terminus				
SN/No.	**Sign**	**Chainage (mm)**	**Position**	**Area (m2)**
22	I.30	0+000	RHS	0.36
23	R1	0+010	RHS	0.47
24	W17	0+050	RHS	0.24
25	W17	0+400	LHS	0.24
26	R1	0+450	LHS	0.47
27	I.30	0+455	LHS	0.36
28	I.14	0+465	Highland	1.54
Link 2-Gakoromene Market				
SN/No.	**Sign**	**Chainage (mm)**	**Position**	**Area (m2)**
29	I.30	0+000	RHS	0.36
30	R1	0+010	RHS	0.47
31	W17	0+620	LHS	0.24
32	R1	0+630	LHS	0.47
33	I.30	0+635	LHS	0.36
34	I.14	0+642	ISLAND	1.53
Link 3 - Mewas Jct				
SN/No.	**Sign**	**Chainage (mm)**	**Position**	**Area (m2)**
35	I.30	0+000	RHS	0.36
36	R1	0+010	RHS	0.47
37	W17	0+050	RHS	0.24
38	W17	0+280	RHS	0.24
39	R1	0+330	LHS	0.47
40	I.30	0+330	RHS	0.36
41	I.14	0+341	ISLAND	1.53

CLIENT:

Kenya National Highways Authority
Quality Highways, Better Connections

KENYA NATIONAL HIGHWAY AUTHORITY
Barabara Plaza,
Off Airport South Road,
P. O. Box, 49712 - 00100,
NAIROBI.

KENYA URBAN ROADS AUTHORITY
Barabara Plaza,
Off Airport South Road,
P. O. Box, 49712 - 00100,
NAIROBI.

FINANCIER:

THE WORLD BANK

PROJECT:

HORN OF AFRICA GATEWAY DEVELOPMENT PROJECT (HOAGDP): -

Consultancy Services for the Design and Works Supervision for the Proposed Extension of Meru Bypass.

CONTRACT NO:

KeNHA/RD/CS/D/4205/2024

CONSULTANT:

egis

One Padmore Place 6th Floor,
George Padmore Road,
P. O. Box, 76672 - 00508,
NAIROBI.

DESIGN DETAILS

Action	Name	Date
Designed By:	S.A	AUG 2025
Drawn By:	J.M	AUG 2025
Checked By:	L.R	AUG 2025
Approved By:	S.O	AUG 2025

DRAWING REVISIONS

No.	Revision Details	Reviewed	Initials	Date	Approved
		By			
		Checked			
		By			
		Checked			
		By			
		Checked			
		By			
		Checked			
		By			
		Checked			

DRAWING TITLE:

SCHEDULE OF ROAD SIGNS

DRAWING SCALE:

AS SHOWN

DRAWING NO:

SCH-RS-002

MERU-BYPASS ROADS - SIGNS SCHEDULE				
WESTERN BYPASS ROADS				
Western ByPass-Link Road				
SN/No.	**Sign**	**Chainage (mm)**	**Position**	**Area (m2)**
18	R1	0+000	LHS	0.47
19	I.30	0+010	LHS	0.36
20	W6	0+010	RHS	0.24
21	I.14	0+010	LHS	1.41
22	I.30	0+010	LHS	0.36
23	W.17	0+050	LHS	0.24
24	W5	0+190	LHS	0.24
25	I.41	0+270	LHS	0.28
26	I.41	0+270	LHS	0.28
27	I.41	0+310	RHS	0.28
28	W1	0+600	LHS	0.28
29	W29	0+650	RHS	0.24
30	R1	0+690	RHS	0.47
31	I.14	0+690	RHS	1.84
Gikumene Jct-Mate Road				
SN/No.	**Sign**	**Chainage (mm)**	**Position**	**Area (m2)**
1	I.11	0+000	ISLAND	3.19
2	R2	0+010	RHS	0.24
3	I.30	0+010	RHS	0.36
4	W17	0+060	RHS	0.24
5	I.3	0+100	RHS	3.72
6	R2	0+310	LHS	0.24
7	W1	0+320	LHS	0.28
8	W2	0+450	RHS	0.28
9	W2	0+450	RHS	0.28
10	W2	0+570	LHS	0.28
11	W1	0+710	RHS	0.28
12	W6	1+070	LHS	0.24
13	W5	1+450	RHS	0.24
14	I.22	1+690	LHS	0.73
15	W36	1+710	LHS	0.3
16	W36	1+720	LHS	0.58
17	I.30	1+730	RHS	0.36
18	I.22	1+750	RHS	0.73
19	W17	1+760	RHS	0.24
20	I.41	1+840	LHS	0.28
21	I.3	2+520	LHS	3.22
22	I.11	2+597	ISLAND	5.17

CLIENT:

Kenya National Highways Authority
Quality Highways, Better Connections

KENYA NATIONAL HIGHWAY AUTHORITY
Barabara Plaza,
Off Airport South Road,
P. O. Box, 49712 - 00100,
NAIROBI.

KENYA URBAN ROADS AUTHORITY
Barabara Plaza,
Off Airport South Road,
P. O. Box, 49712 - 00100,
NAIROBI.

FINANCIER:

THE WORLD BANK

PROJECT:

HORN OF AFRICA GATEWAY DEVELOPMENT PROJECT (HOAGDP): -

Consultancy Services for the Design and Works Supervision for the Proposed Extension of Meru Bypass.

CONTRACT NO:

KeNHA/RD/CS/D/4205/2024

CONSULTANT:

egis

One Padmore Place 6th Floor,
George Padmore Road,
P. O. Box, 76672 - 00508,
NAIROBI.

DESIGN DETAILS

Action	Name	Date
Designed By:	S.A	AUG 2025
Drawn By:	J.M	AUG 2025
Checked By:	L.R	AUG 2025
Approved By:	S.O	AUG 2025

DRAWING REVISIONS

No.	Revision Details	Reviewed	Initials	Date	Approved
		By			
		Checked			
		By			
		Checked			
		By			
		Checked			
		By			
		Checked			
		By			
		Checked			

DRAWING TITLE:

SCHEDULE OF ROAD SIGNS

DRAWING SCALE:

AS SHOWN

DRAWING NO:

SCH-RS-003

SCHEDULE OF BUS BAY					
ALIGNMENT	**SIGN.**	**FROM**	**TO**	**DIRECTION**	**LENGTH**
KAMBAKIA ROADS					
3 Steers - Kambakia	I.41	1+469.00	1+514.00	RHS	45.00
Kambakia - Kagotone	I.41	0+628.00	0+673.00	RHS	45.00
	I.41	0+735.00	0+780.00	LHS	45.00
RUNOGONE-KAITHE ROAD					
Runogone-Kaithe Road	I.41	0+425.00	0+470.00	RHS	45.00
	I.41	0+470.00	0+515.00	LHS	45.00
HOSPITAL ROAD					
Hospital Road-Kiramburine JCT	I.41	0+280.00	0+325.00	LHS	45.00
WESTERN BYPASS ROAD					
Western Bypass-Mate Link	I.41	0+244.00	0+289.00	RHS	45.00
	I.41	0+290.00	0+335.00	LHS	45.00
Gikumene - Mate	I.41	1+587.00	1+632.00	RHS	45.00
	I.41	1+815.00	1+860.00	LHS	45.00

CLIENT:

Kenya National Highways Authority
Quality Highways, Better Connections

KENYA NATIONAL HIGHWAY AUTHORITY
Barabara Plaza,
Off Airport South Road,
P. O. Box, 49712 - 00100,
NAIROBI.

KENYA URBAN ROADS AUTHORITY
K U R A

KENYA URBAN ROADS AUTHORITY
Barabara Plaza,
Off Airport South Road,
P. O. Box, 49712 - 00100,
NAIROBI.

FINANCIER:

THE WORLD BANK

PROJECT:

HORN OF AFRICA GATEWAY DEVELOPMENT PROJECT (HOAGDP): -

Consultancy Services for the Design and Works Supervision for the Proposed Extension of Meru Bypass.

CONTRACT NO:

KeNHA/RD/CS/D/4205/2024

CONSULTANT:

egis

One Padmore Place 6th Floor,
George Padmore Road,
P. O. Box, 76672 - 00508,
NAIROBI.

DESIGN DETAILS

Action	Name	Date
Designed By:	S.A	AUG 2025
Drawn By:	J.M	AUG 2025
Checked By:	L.R	AUG 2025
Approved By:	S.O	AUG 2025

DRAWING REVISIONS

No.	Revision Details	Reviewed	Initials	Date	Approved
		By			
		Checked			
		By			
		Checked			
		By			
		Checked			
		By			
		Checked			
		By			
		Checked			

DRAWING TITLE:
SCHEDULE BUS BAYS

DRAWING SCALE:
AS SHOWN

DRAWING NO:
SCH-BB-001