COUNTY GOVERNMENT OF LAIKIPIA
DEPARTMENT OF EDUCATION, LIBRARY AND SOCIAL DEVELOPMENT
P.O BOX 131-20321
RUMURUTI
Email: info@laikipia.go.ke

PROPOSED SUPPLY, DELIVERY AND INSTALLATION OF ECDE FURNITURE AND PLAY EQUIPMENT FOR ECDE CLASSROOMS IN KABATI (OL MORAN WARD),NJORUA(GITHIGA WARD), MARIAKANI(IGWAMITI WARD) MUTARA ECDE(NGOBIT WARD), KIMURI, RANCH, PP1 AND PP2 ECDE CLASSROOMS IN NGARENGIRO, EMUNGUSHI,LOKUSERO B,PCEA MIRERA, LIKII , NTURUKUMA, ST. MOSES,MATUIKU,MUGUMO AND KALALU

TENDER NO: LCG/A26/EDU/10/-26/27

ISSUE DATE : 21ST NOVEMBER, 2026

CLOSING DATE: 27TH NOVEMBER, 2026

TIME: 12:00 NOON

NEGOTIATION NUMBER: 2416723

NOVEMBER, 2026.

TABLE OF CONTENTS

PREFACE v

APPENDIX TOTHE PREFACE vi

GUIDELINES FOR PREPARATION OF TENDER DOCUMENTS vi

1. GENERAL vi
2. PART 1 - TENDERING PROCEDURES vi
3. PART 2 - PROCUREMENT ENTITY'S REQUIREMENTS vii
4. PART 3 - CONDITIONS OF CONTRACT ANDCONTRACTFORMS vii

INVITATION TOTENDER ix

PART 1 - TENDERING PROCEDURES

SECTION I - INSTRUCTIONSTOTENDERERS 1

A. General 1
1. Scope of Tender 1
2. Definitions 1
3. Fraud and Corruption 1
4. Eligible Tenderers 1
5. Eligible goods, Plant and equipment for Installation Services 3
B. Contents of Tendering Document 3
6. Sections of Tendering Document 3
7. Site Visit 4
8. Pre-Tender Meeting and a pre-arranged pretender visit of the site of the works 4
9. Clarification of Tender Documents 5
10. Amendment of Tendering Document 5
C. Preparation of Tenders 5
11. Cost of Tendering 5
12. Language of Tender 5
13. Documents Comprising the Tender 5
14. Form of Tender and Price Schedules 6
15. Alternative Tenders 6
14. Documents Establishing the Eligibility of the Plant and Installation Services 7
15. Documents Establishing the Eligibility and Qualifications of the Tenderer 7
16. Documents Establishing the Conformity of the Plant and Installation Services 8
17. Tender Prices and Discounts 8
18. Currencies of Tender and Payment 10
19. Period of Validity of Tenders 10
20. Tender Security 10
21. Format and Signing of Tender 11
22. Submission, Sealing and Marking of Tenders 11
23. Deadline for Submission of Tenders 12
24. Late Tenders 12
26. Tender Opening 12

B. Evaluation and Comparison of Tenders 13

27. Confidentiality 13

28. Clarification of Tenders 13
29. Deviations, Reservations, and Omissions 14
30. Determination of Responsiveness 14
31. Nonmaterial Non-conformities 14
32. Correction of Arithmetical Errors 14
33. Conversion to Single Currency 15
34. Margin of Preference 15
35. Evaluation of Tenders 15
36. Comparison of Tenders 16
37. Abnormally Low Tenders and Abnormally high Tenders 16
38. Unbalanced or Front Loaded Tenders 17
39. Eligibility and Qualification of the Tenderer 17
40. Procuring Entity's right to Accept any Tender and to Reject Any or all Tenders 18

A. Award of Contract 18
41 Award Criteria 18

42. Notice of Intention to Enter Into a Contract 18
43. Standstill Period 18
44. Debriefing by the Procuring Entity 18
45. Letter of Award 18
46. Signing of Contract 19
47. Performance Security 19
48 Publication of Procurement Contract 19

49. Appointment of Adjudicator 19
50. Procurement Related Complaint 19

SECTION II - TENDERDATASHEET 20

SECTION III - EVALUATION AND QUALIFICATIONCRITERIA 24

1. General Provision 24

2. Preliminary examination for Determination of Responsiveness 24
3. Evaluation 24
4. Multiple Contracts (ITT35.6) 26
5. MARGIN OF PREFERENCE 26
6. Alternative Tenders(ITT13.1) 27
7. Post qualification and Contract award (ITT 39),more specifically 27

SECTION IV -TENDERING FORMS 35

1. FORM OFTENDER 35
TENDERER'S ELIGIBILITY - CONFIDENTIALBUSINESSQUESTIONNAIRE 37

CERTIFICATE OF INDEPENDENTTENDERDETERMINATION 40

SCHEDULE OF RATESANDPRICES 44

Price Adjustment 46

TECHNICALPROPOSAL 48

Contractor's Equipment 53

Functional Guarantees 53

Personnel 54

Tenderers Qualification without prequalification 56
Form ELI 1.1 57
Form ELI 1.2 58
Form FIN – 3.1 60
Form FIN - 3.2 61
Form FIN3.3 61
Form EXP4.1 62
Form of Tender Security 65
Form of Tender Security –Bank Guarantee 65
FORM OF TENDER SECURITY -INSURANCE GUARANTEE 66
TENDER-SECURING DECLARATION FORM {r 46and 155(2)} 67
MANUFACTURER'SAUTHORIZATIONFORM 68
PART 2 - PROCURINGENTITY'S REQUIREMENTS 69
SCOPE OF SUPPLY OF PLANT AND INSTALLATION SERVICES BYTHE CONTRACTOR 70
Specification 71
FORMSAND PROCEDURES 72
Form of Completion Certificate 72
FORM OF OPERATIONALACCEPTANCECERTIFICATE 72
CHANGE ORDER PROCEDUREANDFORMS 73
ANNEX 1. REQUEST FORCHANGEPROPOSAL 74
ANNEX 2. ESTIMATE FORCHANGE PROPOSAL 75
ANNEX 3. ACCEPTANCEOFESTIMATE 76
ANNEX 4.CHANGEPROPOSAL 77
ANNEX 5.CHANGE ORDER 79
ANNEX 6. PENDING AGREEMENTCHANGEORDER 80
ANNEX 7. APPLICATION FORCHANGE PROPOSAL 81
PART 3 – CONDITIONS OF CONTRACT ANDCONTRACTFORMS 85
GENERAL CONDITIONSOFCONTRACT 86
A. Contract and Interpretation 86
1. Definitions 86
2. Contract Documents 86
3. Interpretation 87
4. Communications 88
5. Law and Language 88
6. Fraud and Corruption 88
B. Subject Matter of Contract 88
7. Scope of Facilities 88
8. Time for Commencement and Completion 89
9. Contractor's Responsibilities 89
10. Procuring Entity's Responsibilities 90

C. Payment 90
11. Contract Price 90
12. Terms of Payment 91
13. Securities 91
14. Taxes and Duties 92
A. Intellectual Property 92
15. License/Use of Technical Information 92
16. Confidential Information 92
B. Execution of the Facilities 93

17. Representatives 93
18. Work Program 94
19. Subcontracting 95
20. Design and Engineering 95

21. Procurement 96
22. Installation 97
23. Test and Inspection 102
24. Completion of the Facilities 103
25. Commissioning and Operational Acceptance 104

A. Guarantees and Liabilities 105
26. Completion Time Guarantee 105
27. Defect Liability 106
28. Functional Guarantees 107
29. Patent Indemnity 108
30. Limitation of Liability 108
B. Risk Distribution 109

31. Transfer of Ownership 109
32. Care of Facilities 109
34. Insurance 110
35. Unforeseen Conditions 113
36. Change in Laws and Regulations 113
37. Force Majeure 113
38. War Risks 114
A. Change in Contract Elements 115
39. Change in the Facilities 115
40. Extension of Time for Completion 117
41. Suspension 118
42. Termination 119
43. Assignment 122
44. Export Restrictions 122
B. Claims, Disputes and Arbitration 123

45. Contractor's Claims 123
46. Claims, Disputes and Arbitration 124

SECTION IX - SPECIAL CONDITIONSOFCONTRACT 126

SECTION VIII -CONTRACTFORMS 128

NOTIFICATION OF INTENTIONTOAWARD 129

REQUEST FOR REVIEW 132

LETTER OF AWARD 132

CONTRACT AGREEMENT 133

APPENDICES 135

APPENDIX 1: TERMS AND PROCEDURESOF PAYMENT 136

APPENDIX 2.PRICEADJUSTMENT 138

APPENDIX 3.INSURANCEREQUIREMENTS 140
APPENDIX 4.TIME SCHEDULE 142
APPENDIX 5. LIST OF MAJOR ITEMS OF PLANT AND INSTALLATION SERVICES AND LIST OFAPPROVEDSUBCONTRACTORS 143
APPENDIX 6. SCOPE OF WORKS AND SUPPLY BY THEPROCURING ENTITY 144
APPENDIX 7. LIST OF DOCUMENTS FOR APPROVALOR REVIEW 145
APPENDIX 8.FUNCTIONALGUARANTEES 146
PERFORMANCE SECURITY FORM 148
PERFORMANCE SECURITY OPTION 2 – (Performance Bond) 150
ADVANCE PAYMENT SECURITY – Demand Bank Guarantee 152

TENDER DOCUMENT FOR THE PROPOSED SUPPLY, DELIVERY AND INSTALLATION OF ECDE FURNITURE AND PLAY EQUIPMENT FOR ECDE CLASSROOMS IN KABATI (OL MORAN WARD),NJORUA(GITHIGA WARD), MARIAKANI(IGWAMITI WARD) MUTARA ECDE(NGOBIT WARD), KIMURI, RANCH, PP1 AND PP2 ECDE CLASSROOMS IN NGARENGIRO, EMUNGUSHI,LOKUSERO B,PCEA MIRERA, LIKII , NTURUKUMA, ST. MOSES,MATUIKU,MUGUMO AND KALALU.

NEGOTIATION NUMBER: 2416723-2026/27

NAME AND CONTACT ADDRESSES OF PROCURING ENTITY

Name: COUNTY GOVERNMENT OF LAIKIPIA

Address: P.O. BOX 131-20321, RUMURUTI-KENYA.

Email address: **info@laikipia.go.ke**

2) Invitation to Tender (ITT) No. **LCG/A26/EDU/10/-26/27**

3) **Tender Name**: **PROPOSED SUPPLY AND DELIVERY OF CHAIRS, TABLES, SLIDES AND SWINGS FOR ECDE CLASSROOMS IN KABATI (OL MORAN WARD),NJORUA(GITHIGA WARD), MARIAKANI(IGWAMITI WARD) MUTARA ECDE(NGOBIT WARD), KIMURI, RANCH, PP1 AND PP2 ECDE CLASSROOMS IN NGARENGIRO, EMUNGUSHI,LOKUSERO B,PCEA MIRERA, LIKII , NTURUKUMA, ST. MOSES,MATUIKU,MUGUMO AND KALALU.**.

INVITATION TO TENDER (ITT) PROCURING ENTITY:

Name: COUNTY GOVERNMENT OF LAIKIPIA

Address: P.O. BOX 131-20321, RUMURUTI-KENYA.

CONTRACT NAME AND DESCRIPTION: **PROPOSED SUPPLY, DELIVERY AND INSTALLATION OF ECDE FURNITURE AND PLAY EQUIPMENT FOR ECDE CLASSROOMS IN KABATI (OL MORAN WARD),NJORUA(GITHIGA WARD), MARIAKANI(IGWAMITI WARD) MUTARA ECDE(NGOBIT WARD), KIMURI, RANCH, PP1 AND PP2 ECDE CLASSROOMS IN NGARENGIRO, EMUNGUSHI,LOKUSERO B,PCEA MIRERA, LIKII , NTURUKUMA, ST. MOSES,MATUIKU,MUGUMO AND KALALU.** The *County Government of Laikipia* invites sealed tenders for **PROPOSED SUPPLY, DELIVERY AND INSTALLATION OF ECDE FURNITURE AND PLAY EQUIPMENT FOR ECDE CLASSROOMS IN KABATI (OL MORAN WARD),NJORUA(GITHIGA WARD), MARIAKANI(IGWAMITI WARD) MUTARA ECDE(NGOBIT WARD), KIMURI, RANCH, PP1 AND PP2 ECDE CLASSROOMS IN NGARENGIRO, EMUNGUSHI,LOKUSERO B,PCEA MIRERA, LIKII , NTURUKUMA, ST. MOSES,MATUIKU,MUGUMO AND KALALU.**Tendering will be conducted under open competitive method (National) using a standardized tender document. Tendering is open to all qualified and interested Tenderers.

1. Qualified and interested tenderers may obtain further information and inspect the Tender Documents during office hours *[i.e.0900to1700hours]* at the address given below.

Head of Supply Chain Management,
Department of Finance & Economic Planning,
County Government of Laikipia,
P.O. Box 131-20321,
Rumuruti, Kenya.

2. A complete set of tender documents may be obtained by interested tenderers on the County Government of Laikipia website at www.laikipia.go.ke free of charge. Tenderers who download the tender document must forward their particulars immediately to (info@laikipia.go.ke and P.O. Box 131-20321, Rumuruti, Kenya.
3. The Tenderer shall chronologically serialize all pages of the tender document submitted.
4. Completed tenders should be submitted, so as to be received on or before **27TH NOVEMBER, 2026**.
5. Tenders will be opened immediately after the deadline date and time specified above or any dead line date and time specified later. Tenders will be publicly opened in the presence of the Tenderers' designated representatives and anyone who chooses to attend at the address below.
6. Late tenders will be rejected.
7. The addresses referred to above are:
   - **A. Address for obtaining further information on tender documents**
   - 1) Name of Procuring Entity. County Government of Laikipia.
   - 2) Physical address for hand Courier Delivery to an office or Tender Box (Rumuruti Headquarter at the Treasury offices near Head of Supply Chain Management Office).
   - 3) Postal Address: 131 -20321, Rumuruti.

4) The officer to be contacted
Ms. Josephine N. Kamau,
Director Supply Chain Management,
Cell: 0723871712
E-mail: josephine.kamau@laikipia.go.ke

PART 1 - TENDERING PROCEDURES

SECTION I -INSTRUCTIONS TO TENDERERS

A. General

1. Scope of Tender

1.1 In connection with the Invitation to Tender (ITT), specified in the Tender Data Sheet (TDS), the Procuring Entity, issues this Tendering document for the Design, Supply and Installation of Plant and equipment as specified in Section VII, Procuring Entity's Requirements**.**

2. Definitions

2.1 Throughout this Tender document:

a) The term "in writing" means communicated in written form (e.g.by mail, e-mail, fax, including if specified **in the TDS,** distributed or received through the electronic-procurement system used by the Procuring Entity) with proof of receipt;
b) if the context so requires, "singular" means "plural" and vice versa; and
c) "Day" means calendar day, unless otherwise specified as "Business Day." A Business Day is any day that is an official working day in Kenya. It excludes the Kenya's official public holidays.

3. Fraud and Corruption

3.1 The Procuring Entity requires compliance with the provisions of the Public Procurement and Asset Disposal Act, 2015, Section 62 "Declaration not to engage in corruption". The tender submitted by a person shall include a declaration that the person shall not engage in any corrupt or fraudulent practice and a declaration that the person or his or her sub-contractors are not debarred from participating in public procurement proceedings.

3.2 The Procuring Entity requires compliance with the provisions of the Competition Act 2010, regarding collusive practices in contracting. Any tenderer found to have engaged in collusive conduct shall be disqualified and criminal and/or civil sanctions may be imposed. To this effect, Tenders shall be required to complete and sign the "Certificate of Independent Tender Determination" annexed to the Form of Tender.

3.3 Unfair Competitive Advantage-Fairness and transparency in the tender process require that the firms or their Affiliates competing for a specific assignment do not derive a competitive advantage from having provided consulting services related to this tender. To that end, the Procuring Entity shall indicate in the Data Sheet and make available to all the firms together with this tender document all information that would in that respect give such firm any unfair competitive advantage over competing firms.

3.4 Tenderers shall permit and shall cause their agents (where declared or not), subcontractors, sub consultants, service providers, suppliers, and their personnel, to permit the Procuring Entity to inspect all accounts, records and other documents relating to any initial selection process, prequalification process, tender submission, proposal submission, and contract performance (in the case of award), and to have them audited by auditors appointed by the Procuring Entity.

4. Eligible Tenderers

4.1 A Tenderer may be a firm that is a private entity, a state-owned enterprise or institution subject to ITT 4.6, or any combination of such entities in the form of a joint venture (JV) under an existing agreement or with the intent to enter into such an agreement supported by a Form of intent. In the case of a joint venture, all members shall be jointly and severally liable for the execution of the entire Contract in accordance with the Contract terms. The JV shall nominate a Representative who shall have the authority to conduct all business for and on behalf of any and all the members of the JV during the Tendering process and, in the event the JV is awarded the Contract, during contract execution. The maximum number of JV members shall be specified in the TDS.

4.2 Public Officers of the Procuring Entity and their relatives (i.e. spouse, child, parent, brother or sister and a child, parent, brother or sister of a spouse) their business associates or agents and firms/organizations in which they have a substantial or controlling interest shall not be eligible to tender or be awarded a contract. Public Officers are also not allowed to participate in any procurement proceedings.

4.3 A Tenderer shall not have a conflict of interest. Any Tenderer found to have a conflict of interest shall be disqualified. A Tenderer may be considered to have a conflict of interest for the purpose of this Tendering process, if the Tenderer:

a) Directly or indirectly controls, is controlled by or is under common control with another Tenderer; or
b) Receives or has received any direct or indirect subsidy from another Tenderer; or
c) Has the same legal representative as another Tenderer; or
d) Has a relationship with another Tenderer, directly or through common third parties, that puts it in a position to influence the Tender of another Tenderer, or influence the decisions of the Procuring Entity regarding this Tendering process; or
e) or any of its affiliates participated as a consultant in the preparation of the design or technical specifications of the Plant and Installation Services that are the subject of the Tender; or
f) or any of its affiliates has been hired (or is proposed to be hired) by the Procuring Entity as Project Manager for the Contract implementation; or
g) would be providing goods, works, or non-consulting services resulting from or directly related to consulting services for the preparation or implementation of the project specified in the TDS ITT
2.1 That it provided or were provided by any affiliate that directly or indirectly controls, is controlled by, or is under common control with that firm; or
h) has a close business or family relationship with a professional staff of the Procuring Entity who: (i) are directly or indirectly involved in the preparation of the Tendering document or specifications of the Contract, and/or the Tender evaluation process of such Contract; or (ii) would be involved in the implementation or supervision of such contract unless the conflict stemming from such relationship has been resolved in a manner acceptable to the Procuring Entity.

4.4 A tenderer shall not be involved in corrupt, coercive, obstructive or fraudulent practice. A tenderer that is proven to have been involved in any of these practices shall be automatically disqualified and would not be awarded a contract

4.5 A firm that is a Tenderer (either individually or as a JV member) shall not participate as a Tenderer or as JV member in more than one Tender except for permitted alternative Tenders. Such participation shall result in the disqualification of all Tenders in which the firm is involved. However, this does not limit the participation of a Tenderer as subcontractor in another Tender or of a firm as a subcontractor in more than one Tender.

4.6 A Tenderer may have the nationality of any country, subject to the restrictions pursuant to ITT 4.9. A Tenderer shall be deemed to have the nationality of a country if the Tenderer is constituted, incorporated or registered in and operates in conformity with the provisions of the laws of that country, as evidenced by its articles of incorporation (or equivalent documents of constitution or association) and its registration documents, as the case may be. This criterion also shall apply to the determination of the nationality of proposed subcontractors or sub-consultants for any part of the Contract including related Services.

4.7 A Tenderer that has been debarred by the PPRA shall be ineligible to be prequalified for, initially selected for, Tender for, propose for, financially or otherwise, during such period of time as the PPRA shall have determined. The list of debarred firms and individuals is available at PPRA Website www.ppra.go.ke.

4.8 Tenderers that are state-owned enterprises or institutions in Kenya may be eligible to compete and be awarded a Contract(s) only if they can establish that they (i) are legally and financially autonomous (ii) operate under commercial law, and (iii) are not under supervision of the Procuring Entity.

4.9 Firms and individuals may be ineligible if so indicated in Section V and (a)as a matter of law or official regulations, Kenya prohibits commercial relations with that country; or (b)by an act of compliance with a decision of the United Nations Security Council taken under Chapter VII of the Charter of the United Nations, Kenya prohibits any import of goods or contracting of works or services from that country, or any payments to any country, person, or entity in that country. Where the procurement is implemented across jurisdictional boundaries, then exclusion of a firm or individual on the basis of ITT 4.8 (a) above by any country may be applied to that procurement across other countries involved.

4.10 Foreign tenderers are required to source at least forty (40%) percent of their contract inputs (in supplies, subcontracts and labor) from national suppliers and contractors. To this end, a foreign tenderer shall provide in its tender documentary evidence that this requirement is met. Foreign tenderers not meeting this criterion will be automatically disqualified. Information required to enable the Procuring Entity determine if this condition is met shall be provided in for this purpose is be provided in "SECTION III - EVALUATION AND QUALIFICATION CRITERIA, Item 9".

4.11 Pursuant to the eligibility requirements of ITT 4.10, a tender is considered a foreign tenderer, if it is registered in Kenya, has less than 51 percent ownership by nationals of Kenya and if it does not subcontract foreign contractors more than 10 percent of the contract price. JVs are considered as foreign tenderers if the individual member firms are registered in Kenya have less than 51 percent ownership by nationals of Kenya. The JV shall not subcontract to foreign firms more than 10 percent of the contract price.

4.12 The Competition Act 2010 requires that firms wishing to tender as Joint Venture undertakings which may prevent, distort or lessen competition in provision of services are prohibited unless they are exempt in accordance with the provisions of Section 25 of the Act. JVs will be required to seek for exemption from the Competition Authority of Kenya. Exemption shall not be a condition for tender, but it shall be a condition of contract award and signature. A JV tenderer shall be given opportunity to seek such exemption as a condition of award and signature of contract. Application for exemption from the Competition Authority of Kenya may be accessed from the website www.cak.go.ke

4.13 A Kenyan tenderer shall provide evidence of having fulfilled his/her tax obligations by producing a valid tax clearance certificate or tax exemption certificate issued by the Kenya Revenue Authority.

5. Eligible goods, Plant and equipment for Installation Services

5.1 The Plant and equipment for Installation Services to be supplied under the Contract may have their origin in any eligible country.

5.2 For purposes of ITT 5.1 above, "origin" means the place where the plant, or component parts thereof are mined, grown, produced or manufactured, and from which the services are provided. Plant components are produced when, through manufacturing, processing, or substantial or major assembling of components, a commercially recognized product results that is substantially in its basic characteristics or in purpose or utility from its components.

5.3 Any goods, works and production processes with characteristics that have been declared by the relevant national environmental protection agency or by other competent authority as harmful to human beings and to the environment shall not be eligible for procurement.

B. Contents of Tendering Document

6. Sections of Tendering Document

6.1 The Tendering document consists of Parts 1, 2, and 3, which include all the sections indicated below, and should be read in conjunction with any Addenda issued in accordance with ITT 10.

PART 1 - Tendering Procedures

i) Section I- Instructions to Tenderers (ITT)
ii) Section II-Tender Data Sheet (TDS)
iii) Section III- Evaluation and Qualification Criteria
iv) Section IV-Tendering Forms
v) Section V- Eligible Countries
vi) Section VI- Fraud and Corruption

PART 2 - Procuring Entity's Requirements

vii) Section VII-Procuring Entity's Requirements

PART 3 - Conditions of Contract and Contract Forms

viii) Section VIII- General Conditions of Contract (GCC)
ix) Section IX- Special Conditions of Contract (SCC)
x) Section X- Contract Forms

6.2 The Invitation to Tender Notice issued by the Procuring Entity is not part of the Tendering document.

6.3 Unless obtained directly from the Procuring Entity, the Procuring Entity is not responsible for the completeness of the document, responses to requests for clarification, the Minutes of the pre-Tender meeting (if any), or Addenda to the Tendering document in accordance with ITT 10. In case of any contradiction, documents obtained directly from the Procuring Entity shall prevail.

6.4 The Tenderer is expected to examine all instructions, forms, terms, and specifications in the Tendering document and to furnish with its Tender all information or documentation as is required by the Tendering document.

7. Site Visit

7.1 The Tenderer, at the Tenderer's own responsibility and risk, is encouraged to visit and examine the Site of the Required Services and its surroundings and obtain all information that may be necessary for preparing the Tender and entering into a contract for the Services. The costs of visiting the Site shall be at the Tenderer's own expense.

8. Pre-Tender Meeting and a pre-arranged pretender visit of the site of the works

8.1 The Procuring Entity shall specify in the **TDS** if a pre-tender conference will be held, when and where. The Procuring Entity shall also specify in the **TDS** if a pre-arranged pretender visit of the site of the works will be held and when. The Tenderer's designated representative is invited to attend a pre-arranged pretender visit of the site of the works. The purpose of the meeting will be to clarify issues and to answer questions on any matter that may be raised at that stage.

8.2 The Tenderer is requested to submit any questions in writing, to reach the Procuring Entity not later than the period specified in the **TDS** before the meeting.

8.3 Minutes of the pre-Tender meeting and the pre-arranged pretender visit of the site of the works, if applicable, including the text of the questions asked by Tenderers and the responses given, together with any responses prepared after the meeting, will be transmitted promptly to all Tenderers who have acquired the Tender Documents in accordance with ITT6.3. Minutes shall not identify the source of the questions asked.

8.4 The Procuring Entity shall also promptly publish anonymized (no names) Minutes of the pre-Tender

meeting and the pre-arranged pretender visit of the site of the works at the webpage identified in the **TDS**. Any modification to the Tender Documents that may become necessary as a result of the pre-Tender meeting shall be made by the Procuring Entity exclusively through the issue of an Addendum pursuant to ITT10 and not through the minutes of the pre-Tender meeting. Nonattendance at the pre-Tender meeting will not be a cause for disqualification of a Tenderer.

9. Clarification of Tender Documents

9.1 A Tenderer requiring any clarification of the Tender Document shall contact the Procuring Entity in writing at the Procuring Entity's address specified in the **TDS** or raise its enquiries during the pre-Tender meeting and the pre-arranged pretender visit of the site of the works if provided for in accordance with ITT8.4. The Procuring Entity will respond in writing to any request for clarification, provided that such request is received no later than the period specified in the **TDS** prior to the deadline for submission of tenders. The Procuring Entity shall forward copies of its response to all tenderers who have acquired the Tender Documents in accordance with ITT6.3, including a description of the inquiry but without identifying its source. If so specified in the **TDS**, the Procuring Entity shall also promptly publish its response at the webpage identified in the **TDS**. Should the clarification result in changes to the essential elements of the Tender Documents, the Procuring Entity shall amend the Tender Documents appropriately following the procedure under ITT10.

10. Amendment of Tendering Document

10.1 At any time prior to the deadline for submission of Tenders, the Procuring Entity may amend the Tendering document by issuing addenda.

10.2 Any addendum issued shall be part of the tendering document and shall be communicated in writing to all who have obtained the tendering document from the Procuring Entity in accordance with ITT6.3. The Procuring Entity shall also promptly publish the addendum on the Procuring Entity's webpage in accordance with ITT8.1.

10.3 To give prospective Tenderers reasonable time in which to take an addendum into account in preparing their Tenders, the Procuring Entity shall extend, as necessary, the deadline for submission of Tenders, in accordance with ITT24.2 below.

C. Preparation of Tenders

11. Cost of Tendering

11.1 The Tenderer shall bear all costs associated with the preparation and submission of its Tender, and the Procuring Entity shall not be responsible or liable for those costs, regardless of the conductor outcome of the Tendering process.

12. Language of Tender

12.1 The Tender, as well as all correspondence and documents relating to the Tender exchanged by the Tenderer and the Procuring Entity, shall be written in the English language. Supporting documents and printed literature that are part of the Tender may be in another language provided they are accompanied by an accurate translation of the relevant passages in the English Language, in which case, for purposes of interpretation of the Tender, such translation shall govern.

13. Documents Comprising the Tender

13.1 The Tender shall comprise the following:

- **a) Form of Tender** prepared in accordance with ITT 14.1;
- **b) Price Schedules** completed in accordance with ITT 14 and ITT 19;
- **c) Tender Security** or **Tender Securing Declaration,** in accordance with ITT 22;
- **d) Alternative Tender**, if permissible, in accordance with ITT 15;

e) **Authorization**: written confirmation authorizing the signatory of the Tender to commit the Tenderer, in accordance with ITT 23.3;

f) **Eligibility of Plant and Installation Services:** documentary evidence established in accordance with ITT 16.1 that the Plant and Installation Services offered by the Tenderer in its Tender or in any alternative Tender, if permitted, are eligible;

g) **Tenderer's Eligibility and Qualifications:** documentary evidence in accordance with ITT 17.1 establishing the Tenderer's eligibility and qualifications to perform the Contract if its Tender is accepted;

h) **Conformity:** documentary evidence in accordance to ITT18 that the Plant and Installation Services offered by the Tenderer conform to the Tendering document;

i) **Subcontractors**: list of subcontractors in accordance with ITT18.2; and

j) Any other document required **in the TDS**.

13.1 In addition to the requirements under ITT 13.1, Tenders submitted by a JV shall include a copy of the Joint Venture Agreement entered in to by all members. Alternatively, a Form of intent to execute a Joint Venture Agreement in the event of a successful Tender shall be signed by all members and submitted with the Tender, together with a copy of the proposed Agreement. The Tenderer shall serialize pages of all tender documents submitted.

13.2 The Tenderer shall furnish in the Form of Tender information on commissions and gratuities, if any, paid or to be paid to agents or any other party relating to this Tender

14. Form of Tender and Price Schedules

14.1 The Form of Tender and Price Schedules shall be prepared, using the relevant forms furnished in Section IV, Tendering Forms. The forms must be completed as instructed in each form without any alterations to the text, and no substitutes shall be accepted except as provided under ITT 21.3. All blank spaces shall be filled in with the information requested.

15. Alternative Tenders

15.1 Unless otherwise specified in the **TDS**, alternative Tenders shall not be considered.

15.2 When alternatives to the Time Schedule are explicitly invited, a statement to that effect will be included in the **TDS**, and the method of evaluating different time schedules will be described in Section III, Evaluation and Qualification Criteria.

15.3 Except as provided under ITT 15.4 below, Tenderers wishing to offer technical alternatives to the Procuring Entity's requirements as described in the Tendering document must also provide: (i) a price at which they are prepared to offer a Plant meeting the Procuring Entity's requirements; and (ii) all information necessary for a complete evaluation of the alternatives by the Procuring Entity, including drawings, design calculations, technical specifications, breakdown of prices, and proposed installation methodology and other relevant details. Only the technical alternatives, if any, of the Tenderer with the Best Evaluated Tender conforming to the basic technical requirements shall be considered by the Procuring Entity.

15.4 When Tenderers are invited in the **TDS** to submit alternative technical solutions for specified parts of the facilities, such parts will be identified in the **TDS**, as will the method for their evaluation, and described in Section VII, Procuring Entity's Requirements.

16. Documents Establishing the Eligibility of the Plant and Installation Services

16.1 To establish the eligibility of the Plant and Installation Services in accordance with ITT 5, Tenderers shall complete the country of origin declarations in the Price Schedule Forms, included in Section IV, Tendering Forms.

17. Documents Establishing the Eligibility and Qualifications of the Tenderer

17.1 To establish its eligibility and qualifications to perform the Contract in accordance with Section III, Evaluation and Qualification Criteria, the Tenderer shall provide the information requested in the corresponding information sheets included in Section IV, Tendering Forms.

17.2 Tenderers shall be asked to provide, as part of the data for qualification, such information, including details of ownership, as shall be required to determine whether, according to the classification established by the Procuring Entity a supplier or group of suppliers qualifies for a margin of preference. Further the information will enable the Procuring Entity identify any actual or potential conflict of interest in relation to the procurement and/or contract management processes, or a possibility of collusion between tenderers, and thereby help to prevent any corrupt influence in relation to the procurement process or contract management.

17.3 The purpose of the information described in ITT 15.1 above overrides any claims to confidentiality which a tenderer may have. There can be no circumstances in which it would be justified for a tenderer to keep information relating to its ownership and control confidential where it is tendering to undertake public sector work and receive public sector funds. Thus, confidentiality will not be accepted by the Procuring Entity as a justification for a Tenderer's failure to disclose, or failure to provide required information on its ownership and control.

17.4 The Tenderer shall provide further documentary proof, information or authorizations that the Procuring Entity may request in relation to ownership and control which information on any changes to the information which was provided by the tenderer under ITT 15.1. The obligations to require this information shall continue for the duration of the procurement process and contract performance and after completion of the contract, if any change to the information previously provided may reveal a conflict of interest in relation to the award or management of the contract.

17.5 All information provided by the tenderer pursuant to these requirements must be complete, current and accurate as at the date of provision to the Procuring Entity. In submitting the information required pursuant to these requirements, the Tenderer shall warrant that the information submitted is complete, current and accurate as at the date of submission to the Procuring Entity.

17.6 If a tenderer fails to submit the information required by these requirements, its tenderer will be rejected. Similarly, if the Procuring Entity is unable, after taking reasonable steps, to verify to a reasonable degree the information submitted by a tenderer pursuant to these requirements, then the tender will be rejected.

17.7 If information submitted by a tenderer pursuant to these requirements, or obtained by the Procuring Entity (whether through its own enquiries, through notification by the public or otherwise), shows any conflict of interest which could materially and improperly benefit the tenderer in relation to the procurement or contract management process, then:

i) if the procurement process is still ongoing, the tenderer will be disqualified from the procurement process,

ii) if the contract has been awarded to that tenderer, the contract award will be set aside,

iii) the tenderer will be referred to the relevant law enforcement authorities for investigation of whether the tenderer or any other persons have committed any criminal offence.

17.8 If a tenderer submits information pursuant to these requirements that is in complete, inaccurate or out-of-date, or attempts to obstruct the verification process, then the consequences ITT 6.7 will ensue unless the tenderer can show to the reasonable satisfaction of the Procuring Entity that any such act was not material, or was due to genuine error which was not attributable to the intentional act, negligence or recklessness of the tenderer.

18. Documents Establishing the Conformity of the Plant and Installation Services

18.1 The Tenderer shall furnish the information stipulated in Section IV, Tendering Forms in sufficient

detail to demonstrate substantial responsiveness of the Tenderers' proposal to the work requirements and the completion time.

18.2 For major items of Plant and Installation Services as listed by the Procuring Entity in Section III, Evaluation and Qualification Criteria, which the Tenderer intends to purchase or subcontract, the Tenderer shall give details of the name and nationality of the proposed Subcontractors, including manufacturers, for each of those items. In addition, the Tenderer shall include in its Tender information establishing compliance with the requirements specified by the Procuring Entity for these items. Quoted rates and prices will be deemed to apply to whichever Subcontractor is appointed, and no adjustment of the rates and prices will be permitted.

18.3 The Tenderer shall be responsible for ensuring that any Subcontractor proposed complies with the requirements of ITT 4, and that any plant, or services to be provided by the Subcontractor comply with the requirements of ITT 5 and ITT 15.1.

19. Tender Prices and Discounts

19.1 Unless otherwise specified in the **TDS**, Tenderers shall quote for the entire Plant and Installation Services on a "single responsibility" basis. The total Tender price shall include all the Contractor's obligations mentioned in or to be reasonably inferred from the Tendering document in respect of the design, manufacture, including procurement and subcontracting (if any), delivery, construction, installation and completion of the Plant. This includes all requirements under the Contractor's responsibilities for testing, pre-commissioning and commissioning of the plant and, where so required by the Tendering document, the acquisition of all permits, approvals and licenses, etc.; the operation, maintenance and training services and such other items and services as specified in the Tendering document, all in accordance with the requirements of the General Conditions. Items against which no price is entered by the Tenderer will not be paid for by the Procuring Entity when executed and shall be deemed to be covered by the prices for other items.

19.2 Tenderers are required to quote the price for the commercial, contractual and technical obligations outlined in the Tendering document.

19.3 Tenderers shall give a breakdown of the prices in the manner and detail called for in the Price Schedules included in Section IV, Tendering Forms.

19.4 Depending on the scope of the Contract, the Price Schedules may comprise up to the six (6) schedules listed below. Separate numbered Schedules included in Section IV, Tendering Forms, from those numbered1to4 below, shall be used for each of the elements of the Plant and Installation Services. The total amount from each Schedule corresponding to an element of the Plant and Installation Services shall be summarized in the schedule titled Grand Summary, (Schedule 5), giving the total Tender price (s) to be entered in the Form of Tender. Tenderers shall note that the plant and equipment included in Schedule Nos. 1 and 2 below exclude materials used for civil, building and other construction works. All such materials shall be included and priced under Schedule No.4, Installation Services. The Schedules comprise:

Schedule No. 1: Plant (including Mandatory Spare Parts) Supplied from Abroad

Schedule No. 2: Plant (including Mandatory Spare Parts) Supplied from within Kenya

Schedule No. 3: Design Services

Schedule No. 4: Installation Services **Schedule No. 5**:

Grand Summary (Schedule Nos.1to4) **Schedule No. 6**:

Recommended Spare Parts

19.5 In the Schedules, Tenderers shall give the required details and a breakdown of their prices as follows:

a) Plant to be supplied from a broad (Schedule No.1):

The price of the Plant shall be quoted on CIP-named place of destination basis as specified **in the TDS,** including all taxes payable in Kenya.

b) Plant manufactured within Kenya (Schedule No.2):

i) The price of the plant shall be quoted on an EXW Incoterm basis (such as "ex-works," "ex-factory," "ex-warehouse" or "off-the-shelf," as applicable);

ii) Sales tax and all other taxes payable in Kenya on the plant if the contract is awarded to the Tenderer; and

iii) The total price for the item.

c) Design Services (Schedule No.3);

d) Installation Services shall be quoted separately (Schedule No.4) and shall include rates or prices for local transportation to named place of final destination as specified **in the TDS**, insurance and other services incidental to delivery of the plant, all labor, contractor's equipment, temporary works, materials, consumables and all matters and things of whatsoever nature, including operations and maintenance services, the provision of operations and maintenance manuals, training, etc., where identified in the Tendering document, as necessary for the proper execution of the installation and other services, including all taxes, duties, levies and charges payable in Kenya as of twenty-eight (28) days prior to the deadline for submission of Tenders;

e) Recommended spare parts shall be quoted separately (Schedule 6) as specified in either subparagraph (a) or (b) above in accordance with the origin of the spare parts.

19.6 The terms EXW, CIP, and other similar terms shall be governed by the rules prescribed in the current edition of Incoterms, published by the International Chamber of Commerce, as specified in the **TDS**.

19.7 The prices shall be either fixed or adjustable as specified in the **TDS**.

19.8 In the case of Fixed Price, prices quoted by the Tenderer shall be fixed during the Tenderer's performance of the contract and not subject to variation on any account. A Tender submitted with an adjustable price quotation will be treated as non-responsive and rejected.

19.9 In the case of Adjustable Price, prices quoted by the Tenderer shall be subject to adjustment during performance of the contract to reflect changes in the cost elements such as labor, material, transport and contractor's equipment in accordance with the procedures specified in the corresponding Appendix to the Contract Agreement. A Tender submitted with a fixed price quotation will not be rejected, but the price adjustment will be treated as zero. Tenderers are required to indicate the source of labor and material indices in the corresponding Form in Section IV, Tendering Forms.

19.10 If so indicated in ITT 1.1, Tenders are being invited for individual lots (contracts) or for any combination of lots (packages). Tenderers wishing to offer any price reduction (discount) for the award of more than one Contract shall specify in their Form of Tender the price reductions applicable to each package, or alternatively, to individual Contracts within the package, and the manner in which the price reductions will apply.

19.11 Tenderers wishing to offer any unconditional discount shall specify in their Form of Tender the offered discounts and the manner in which price discounts will apply.

20. Currencies of Tender and Payment

20.1 The currency(ies) of the Tender and the currency(ies) of payments shall be the same. The Tenderer shall quote in the currency of Kenya the portion of the Tender price that corresponds to expenditures incurred in the currency of Kenya, unless otherwise specified in the **TDS**.

20.2 The Tenderer may express the Tender price in any currency. If the Tenderer wishes to be paid in a combination of amounts in different currencies, it may quote its price accordingly but shall use no more than three foreign currencies in addition to the currency of Kenya.

21. Period of Validity of Tenders

21.1 Tenders shall remain valid for the Tender Validity period specified **in the TDS**. The Tender Validity period starts from the Tender submission deadline (as prescribed by the Procuring Entity in accordance with ITT 23.1). A Tender valid for a shorter period shall be rejected by the Procuring Entity as non-responsive.

21.2 In exceptional circumstances, prior to the expiration of the Tender validity period, the Procuring Entity may request Tenderers to extend the period of validity of their Tenders. The request and the responses shall be made in writing. If a Tender Security is requested in accordance with ITT 20, the Tenderer granting the request shall also extend the Tender Security for twenty-eight (28) days beyond the deadline of the extended validity period. A Tenderer may refuse the request without forfeiting its Tender Security. A Tenderer granting the request shall not be required or permitted to modify its Tender, except as provided in ITT 19.3.

21.3 If the award is delayed by a period exceeding fifty-six (56) days beyond the expiry of the initial Tender validity period, the Contract price shall be determined as follows:

a) In the case of **fixed price** contracts, the Contract price shall be the Tender price adjusted by the factor or factors specified **in the TDS**;

b) In the case of **adjustable price** contracts, no adjustment shall be made; or

c) in any case, Tender evaluation shall be based on the Tender price without taking into consideration the applicable correction from those indicated above.

22. Tender Security

22.1 The Tenderer shall furnish as part of its Tender, either a Tender-Securing Declaration or a Tender Security as specified **in the TDS,** in original form and, in the case of a Tender Security, in the amount and currency specified **in the TDS**.

22.2 A Tender-Securing Declaration shall use the form included in Section IV Tendering Forms.

22.3 If a Tender Security is specified pursuant to ITT 20.1, the Tender security shall be a demand guarantee in any of the following forms at the Tenderer's option:

a) cash;

b) a bank guarantee;

c) a guarantee by an insurance company registered and licensed by the Insurance Regulatory Authority listed by the Authority; or

d) a guarantee issued by a financial institution approved and licensed by the Central Bank of Kenya,

22.4 If a Tender Security or a Tender-Securing Declaration is specified pursuant to ITT 20.1, any Tender not accompanied by a substantially responsive Tender Security or Tender-Securing Declaration shall be rejected by the Procuring Entity as non-responsive.

22.5 If a Tender Security is specified pursuant to ITT 20.1, the Tender Security of unsuccessful Tenderers shall be returned as promptly as possible upon the successful Tenderer's furnishing of the Performance Security pursuant to ITT 47.

22.6 The Tender Security of the successful Tenderer shall be returned as promptly as possible once the successful Tenderer has signed the Contract and furnished the required Performance Security.

22.7 The Tender Security may be forfeited or the Tender-Securing Declaration executed:

a) If a Tenderer withdraws its Tender during the period of Tender validity specified by the Tenderer on the Form of Tender; or

b) If the successful Tenderer fails to**:**

i) Sign the Contract in accordance with ITT 47; or

ii) Furnish a performance security in accordance with ITT 48.

22.8 Where the Tender-Securing Declaration is executed the Procuring Entity will recommend to the PPRA to debars the Tenderer from participating in public procurement as provided in the law.

22.9 The Tender Security or the Tender-Securing Declaration of a JV shall be in the name of the JV that submits the

Tender. If the JV has not been legally constituted into a legally enforceable JV at the time of Tendering, the Tender Security or the Tender Securing Declaration shall be in the names of all future members as named in the Form of intent referred to in ITT 4.1and ITT 11.2.

23. Format and Signing of Tender

23.1 The Tenderer shall prepare one original of the documents comprising the Tender as described in ITT 11 and clearly mark it "Original." Alternative Tenders, if permitted in accordance with ITT 13, shall be clearly marked "Alternative". In addition, the Tenderer shall submit copies of the Tender, in the number specified in the TDS and clearly mark them "Copy." In the event of any discrepancy between the original and the copies, the original shall prevail.

23.2 Tenderers shall mark as "CONFIDENTIAL" information in their Tenders which is confidential to their business. This may include proprietary information, trade secrets or commercial or financially sensitive information.

23.3 The original and all copies of the Tender shall be typed or written in indelible ink and shall be signed by a person duly authorized to sign on behalf of the Tenderer. This authorization shall consist of a written confirmation as specified in the **TDS** and shall be attached to the Tender. The name and position held by each person signing the authorization must be typed or printed below the signature. All pages of the Tender where entries or amendments have been made shall be signed or initialed by the person signing the Tender.

23.4 In the case that the Tenderer is a JV, the Tender shall be signed by an authorized representative of the JV on behalf of the JV, and so as to be legally binding on all the members as evidenced by a power of attorney signed by their legally authorized representatives.

23.5 Any interlineations, erasures, or overwriting shall be valid only if they are signed or initialed by the person signing the Tender.

D. Submission and Opening of Tenders

24. Submission, Sealing and Marking of Tenders

24.1 The Tenderer shall deliver the Tender in a single, sealed envelope (one (1) envelope process). The Tenderer shall place the following separate, sealed envelopes:

Inner Envelops:

a) In an envelope marked "ORIGINAL", all documents comprising the Tender, as described in ITT11; and
b) In an envelope marked "COPIES", all required copies of the Tender; and
c) If alternative Tenders are permitted in accordance with ITT 13, and if relevant:
i) In an envelope marked "ORIGINAL–ALTERNATIVE TENDER" the alternative Tender; and
ii) in the envelope marked "COPIES – ALTERNATIVE TENDER" all required copies of the alternative Tender.

The inner envelopes shall:

a) Bear the name and address of the Tenderer;
b) Be addressed to the Procuring Entity in accordance with ITT 23.1;
c) Bear the specific identification of this Tendering process indicated in accordance with ITT 1.1; and
d) Bear a warning not to open before the time and date for Tender opening.

The outer envelope (s) in which the inner envelops are enclosed shall:

a) Be addressed to the Procuring Entity in accordance with ITT 23.1;
b) Bear the specific identification of this Tendering process indicated in accordance with ITT 1.1; and
c) Bear a warning not to open before the time and date for Tender opening.

24.2 If all envelopes are not sealed and marked as required, the Procuring Entity will assume no responsibility for

the misplacement or premature opening of the Tender. Tenders that are misplaced or opened prematurely will not be accepted.

25. Deadline for Submission of Tenders

25.1 Tenders must be received by the Procuring Entity at the address and no later than the date and time indicated in the **TDS**. When so specified in the **TDS**, Tenderers shall have the option of submitting their Tenders electronically. Tenderers submitting Tenders electronically shall follow the electronic Tender submission procedures specified in the **TDS**.

25.2 The Procuring Entity may, at its discretion, extend the deadline for the submission of Tenders by amending the Tendering document in accordance with ITT8, in which case all rights and obligations of the Procuring Entity and Tenderers previously subject to the deadline shall thereafter be subject to the deadline as extended.

26. Late Tenders

26.1 The Procuring Entity shall not consider any Tender that arrives after the deadline for submission of Tenders, in accordance with ITT 23. Any Tender received by the Procuring Entity after the deadline for submission of Tenders shall be declared late, rejected, and returned unopened to the Tenderer.

27. Withdrawal, Substitution, and Modification of Tenders

27.1 A Tenderer may withdraw, substitute, or modify its Tender after it has been submitted by sending a written notice, duly signed by an authorized representative, and shall include a copy of the authorization in accordance with ITT 21.3, (except that withdrawal notices do not require copies). The corresponding substitution or modification of the Tender must accompany the respective written notice. All notices must be:

a) prepared and submitted in accordance with ITT 21 and ITT 22 (except that withdrawals notices do not require copies), and in addition, the respective envelopes shall be clearly marked “Withdrawal,” “Substitution,” “Modification”; and

b) Received by the Procuring Entity prior to the deadline prescribed for submission of Tenders, in accordance with ITT 23.

27.2 Tenders requested to be withdrawn in accordance with ITT25.1 shall be returned unopened to the Tenderers.

27.3 No Tender may be withdrawn, substituted, or modified in the interval between the deadline for submission of Tenders and the expiration of the period of Tender validity specified by the Tenderer on the Form of Tender or any extension thereof.

28. Tender Opening

28.1 Except as in the cases specified in ITT24 and ITT25.2, the Procuring Entity shall publicly open and read out in accordance with ITT26.5 all Tenders received by the deadline at the date, time and place specified **in the TDS** in the presence of Tenderers' designated representatives and anyone who choose to attend. Any specific electronic Tender opening procedures required if electronic Tendering is permitted in accordance with ITT 23.1, shall be as specified **in the TDS**.

28.2 First, the written notice of withdrawal in the envelopes marked “Withdrawal” shall be opened and read out and the envelope with the corresponding Tender shall not be opened, but returned to the Tenderer. No Tender withdrawal shall be permitted unless the corresponding withdrawal notice contains a valid authorization to request the withdrawal and is read out at Tender opening.

28.3 Next, envelopes marked “Substitution” shall be opened and read out and exchanged with the corresponding Tender being substituted, and the substituted Tender shall not be opened, but returned to the Tenderer. No Tender substitution shall be permitted unless the corresponding substitution notice contains a valid authorization to request the substitution and is read out at Tender opening.

28.4 Next, envelopes marked “Modification” shall be opened and read out with the corresponding Tender. No Tender modification shall be permitted unless the corresponding modification notice contains a valid authorization to request the modification and is read out at Tender opening.

28.5 Next, all remaining envelopes shall be opened one at a time, reading out: the name of the Tenderer and the Tender Price(s), including any discounts and alternative Tenders, and indicating whether there is a modification; the presence or absence of a Tender Security or Tender-Securing Declaration, if required; and

any other details as the Procuring Entity may consider appropriate.

28.6 Only Tenders, alternative Tenders and discounts that are opened and read out at Tender opening shall be considered further. The Form of Tender and the Price Schedules are to be initialed by representatives of the Procuring Entity attending Tender opening in the manner specified in the **TDS**.

28.7 The Procuring Entity shall neither discuss the merits of any Tender nor reject any Tender (except for late Tenders, in accordance with ITT 24.1).

28.8 The Procuring Entity shall prepare a record of the Tender opening that shall include, as a minimum:

a) The name of the Tenderer and whether there is a withdrawal, substitution, or modification;
b) The Tender Price, per lot if applicable, including any discounts;
c) Any alternative Tenders; and
d) The presence or absence of a Tender Security or a Tender-Securing Declaration.
e) Number of pages for each tender

28.9 The Tenderers' representatives who are present shall be requested to sign the record. The omission of a Tenderer's signature on the record shall not invalidate the contents and effect of the record. A copy of the record shall be distributed to all Tenderers.

D. Evaluation and Comparison of Tenders

29. Confidentiality

29.1 Information relating to the evaluation of Tenders and recommendation of contract award, shall not be disclosed to Tenderers or any other persons not officially concerned with the Tendering process until information on Intention to Award the Contract is transmitted to all Tenderers in accordance with ITT 42.

29.2 Any effort by a Tenderer to influence the Procuring Entity in the evaluation of the Tenders or Contract award decisions may result in the rejection of its Tender.

29.3 Notwithstanding ITT 27.2, from the time of Tender opening to the time of Contract Award, if any Tenderer wishes to contact the Procuring Entity on any matter related to the Tendering process, it should do so in writing.

30. Clarification of Tenders

30.1 To assist in the examination, evaluation, and comparison of the Tenders, and qualification of the Tenderers, the Procuring Entity may, at its discretion, ask any Tenderer for a clarification of its Tender. Any clarification submitted by a Tenderer that is not in response to a request by the Procuring Entity shall not be considered. The Procuring Entity's request for clarification and the response shall be in writing. No change in the prices or substance of the Tender shall be sought, offered, or permitted, except to confirm the correction of arithmetic errors discovered by the Procuring Entity in the evaluation of the Tenders, in accordance with ITT32.

30.2 If a Tenderer does not provide clarifications of its Tender by the date and time set in the Procuring Entity's request for clarification, its Tender may be rejected.

31. Deviations, Reservations, and Omissions

31.1 During the evaluation of Tenders, the following definitions apply:

a) “Deviation” is a departure from the requirements specified in the Tendering document;
b) “Reservation” is the setting of limiting conditions or withholding from complete acceptance of the requirements specified in the Tendering document; and
c) “Omission” is the failure to submit part or all of the information or documentation required in the Tendering document.

32. Determination of Responsiveness

32.1 The Procuring Entity's determination of a Tender's responsiveness is to be based on the contents of the Tender itself, as defined in ITT 11.

32.2 A substantially responsive Tender is one that meets the requirements of the Tendering document without material deviation, reservation, or omission. A material deviation, reservation, or omission is one that:

a) If accepted, would:
   i) Affect in any substantial way the scope, quality, or performance of the Plant and Installation Services specified in the Contract; or
   ii) Limit in any substantial way, in consistent with the Tendering document, the Procuring Entity's rights or the Tenderer's obligations under the proposed Contract; or
b) if rectified, would unfairly affect the competitive position of other Tenderers presenting substantially responsive Tenders.

32.3 The Procuring Entity shall examine the technical aspects of the Tender in particular, to confirm that all requirements of Section VII, Procuring Entity's Requirements have been met without any material deviation, reservation, or omission.

32.4 If a Tender is not substantially responsive to the requirements of the Tendering document, it shall be rejected by the Procuring Entity and may not subsequently be made responsive by correction of the material deviation, reservation, or omission.

33. Nonmaterial Non-conformities

33.1 Provided that a Tender is substantially responsive, the Procuring Entity may waive any nonconformity in the Tender.

33.2 Provided that a Tender is substantially responsive, the Procuring Entity may request that the Tenderer submit the necessary information or documentation, within a reasonable period of time, to rectify nonmaterial non-conformities in the Tender related to documentation requirements. Requesting information or documentation on such non-conformities shall not be related to any aspect of the price of the Tender. Failure of the Tenderer to comply with the request may result in the rejection of its Tender.

33.3 Provided that a Tender is substantially responsive, the Procuring Entity shall rectify quantifiable non material non-conformities related to the Tender Price. To this effect, the Tender Price shall be adjusted, for comparison purposes only, to reflect the price of a missing or non-conforming item or component in the manner specified **in the TDS**.

34. Correction of Arithmetical Errors

34.1 Provided that the tender is substantially responsive, the Procuring Entity shall correct arithmetical errors on the following basis:
   i) If there is a discrepancy between the unit price and the total price that is obtained by multiplying the unit price and quantity, the unit price shall prevail and the total price shall be corrected, unless in the opinion of the Procuring Entity there is an obvious misplacement of the decimal point in the unit price, in which case the total price as quoted shall govern and the unit price shall be corrected;
   ii) If there is an error in a total corresponding to the addition or subtraction of subtotals, the subtotals shall prevail and the total shall be corrected; and
   iii) If there is a discrepancy between words and figures, the amount in words shall prevail, unless the amount expressed in words is related to an arithmetic error, in which case the amount in figures shall prevail subject to (a) and (b) above.

34.2 Any error detected if considered a major deviation that affects the substance of the tender, shall lead to disqualification of the tender as non-responsive. The method of determining the error as a major deviation shall be specified in the **TDS**.

34.3 Corrected tender prices shall not be used in the evaluation of tenders, comparison of tender prices.

34.4 The Procuring Entity shall calculate the difference between the corrected price and tender price and work out the percentage difference, which will be plus or minus tender price as the case may be; [i.e. (corrected tender price– tender price)/ tender price X100]. This percentage difference between corrected tender price and tender price may be used to determine if the error so detected is considered a major deviation that affects the substance of the tender.

34.5 On award of contract, all payment valuation certificates, variation orders on omissions and additions valued based on rates in the Bill of Quantities will be adjusted by such a percentage specified in ITT 31.4 to ensure contractor is not paid less or more relative to the contract price which would be the tender price.

35. Conversion to Single Currency

35.1 For evaluation and comparison purposes, the currency (ies) of the Tender shall be converted into a single currency as specified **in the TDS.**

36. Margin of Preference

36.1 A margin of preference may be allowed on locally manufactured goods (plant and equipment) only when the contract is open to international tendering, where the tender is likely to attract foreign goods and where the contract exceeds the threshold specified in the Regulations.

36.2 A margin of preference shall not be allowed unless it is specified so in the **TDS**.

36.3 Contracts procured on basis of international tendering and competition shall not be subject to reservations exclusive/ specific groups under women, youth and persons living with disability.

36.4 Where it is intended to reserve a contract to a specific group of businesses (these groups are Small and Medium Enterprises, Women Enterprises, Youth Enterprises and Enterprises of persons living with disability, as the case may be), and who are appropriately registered as such by a competent authority, a procuring entity shall ensure that the invitation to tender specifically indicates that only businesses or firms belonging to the specified group are eligible to tender. Tender shall be reserved to only one group. If not so stated in the Tender documents, the invitation to tender will be open to all interested tenderers.

37. Evaluation of Tenders

37.1 The Procuring Entity shall use the criteria and methodologies listed in this ITT and Section III, Evaluation and Qualification criteria. No other evaluation criteria or methodologies shall be permitted. By applying the criteria and methodologies the Procuring Entity shall determine the Best Evaluated Tender. This is the Tender of the Tenderer that meets the qualification criteria and that has been determined to be:

a) Most responsive to the Tendering document; and
b) The lowest evaluated cost.

37.2 **Technical Evaluation**. The Procuring Entity will carry out a detailed technical evaluation of the Tenders not previously rejected to determine whether the technical aspects are incompliance with the Tendering document. The Tender that does not meet minimum acceptable standards of completeness, consistency and detail, and the specified minimum (or maximum, as the case may be) requirements for specified functional guarantees, will be rejected for non-responsiveness. In order to reach its determination, the Procuring Entity will examine and compare the technical aspects of the Tenders on the basis of the information supplied by the Tenderers, taking into account the following:

a) Overall completeness and compliance with the Procuring Entity's Requirements; conformity of the Plant and Installation Services offered with specified performance criteria, including conformity with the specified minimum (or maximum, as the case may be) requirement corresponding to each functional guarantee, as indicated in the Specification and in Section III, Evaluation and Qualification Criteria; suitability of the Plant and Installation Services offered in relation to the environmental and climatic conditions prevailing at the site; and quality, function and operation of any process control concept included in the Tender;
b) type, quantity and long-term availability of mandatory and recommended spare parts and maintenance services; and
c) Other relevant factors, if any, listed in Section III, Evaluation and Qualification Criteria.

37.3 Where alternative technical solutions have been allowed in accordance with ITT 13, and offered by the Tenderer, the Procuring Entity will make a similar evaluation of the alternatives. Where alternatives have not been allowed but have been offered, they shall be ignored.

37.4 **Economic Evaluation**. To evaluate a Tender, the Procuring Entity shall consider the following:

a) the Tender price, excluding provisional sums and the provision, if any, for contingencies in the Price Schedules;
b) price adjustment due to discounts offered in accordance with ITT 17.11;

c) price adjustment due to quantifiable non material non-conformities in accordance with ITT 31.3;
d) converting the amount resulting from applying (a) to (c) above, if relevant, to a single currency in accordance with ITT 33; and
e) The evaluation factors specified **in the TDS** and in Section III, Evaluation and Qualification Criteria.

37.5 If price adjustment is allowed in accordance with ITT 17.7, the estimated effect of the price adjustment provisions of the Conditions of Contract, applied over the period of execution of the Contract, shall not be taken into account in Tender evaluation.

37.6 In the case of multiple contracts or lots, Tenderers are allowed to tender for one or more lots and the methodology to determine the lowest evaluated cost of the lot (contract) and for combinations, including any discounts offered in the Form of Tender, is specified in Section III, Evaluation and Qualification Criteria.

38. Comparison of Tenders

38.1 The Procuring Entity shall compare the evaluated costs of all substantially responsive Tenders established in accordance with ITT 35.4 to determine the Tender that has the lowest evaluated cost.

39. Abnormally Low Tenders and Abnormally High Tenders

39.1 An Abnormally Low Tender is one where the Tender price, in combination with other elements of the Tender, appears so low that it raises material concerns as to the capability of the Tenderer to perform the Contract for the offered Tender Price or that genuine competition between Tenderers is compromised.

39.2 In the event of identification of a potentially Abnormally Low Tender, the Procuring Entity shall seek written clarifications from the Tenderer, including detailed price analyses of its Tender price in correlation to the subject matter of the contract, scope, proposed methodology, schedule, allocation of risks and responsibilities and any other requirements of the Tendering document.

39.3 After evaluation of the price analyses, in the event that the Procuring Entity determines that the Tenderer has failed to demonstrate its capability to deliver the contract for the offered tender price, the Procuring Entity shall reject the Tender.

39.4 An abnormally high price is one where the tender price, in combination with other constituent elements of the Tender, appears unreasonably too high to the extent that the Procuring Entity is concerned that it (the Procuring Entity) may not be getting value for money or it may be paying too high a price for the contract compared with market prices or that genuine competition between Tenderers is compromised.

39.5 In case of an abnormally high tender price, the Procuring Entity shall make a survey of the market prices, check if the estimated cost of the contract is correct and review the Tender Documents to check if the specifications, scope of work and conditions of contract are contributory to the abnormally high tenders. The Procuring Entity may also seek written clarification from the tenderer on the reason for the high tender price. The Procuring Entity shall proceed as follows:
i) If the tender price is abnormally high based on wrong estimated cost of the contract, the Procuring Entity may accept or not accept the tender depending on the Procuring Entity's budget considerations.
ii) If specifications, scope of work and/or conditions of contract are contributory to the abnormally high tender prices, the Procuring Entity shall reject all tenders and may retender for the contract based on revised estimates, specifications, scope of work and conditions of contract, as the case may be.

39.6 If the Procuring Entity determines that the Tender Price is abnormally too high because genuine competition between tenderers is compromised (*often due to collusion, corruption or other manipulations*), the Procuring Entity shall reject all Tenders and shall institute or cause competent Government Agencies to institute an investigation on the cause of the compromise, before retendering.

40. Unbalanced or Front Loaded Tenders

40.1 If the Tender that is evaluated as the lowest evaluated cost is, in the Procuring Entity's opinion, seriously unbalanced or front loaded the Procuring Entity may require the Tenderer to provide written clarifications. Clarifications may include detailed price analyses to demonstrate the consistency of the Tender prices with the scope of works, proposed methodology, schedule and any other requirements of the Tendering document.

40.2 After the evaluation of the information and detailed price analyses presented by the Tenderer, the Procuring

Entity may:

a) Accept the Tender; or
b) If appropriate, require that the total amount of the Performance Security be increased, at the expense of the Tenderer, to a level not exceeding twenty percent (10%) of the Contract Price; or
c) Reject the Tender.

41. Eligibility and Qualification of the Tenderer

41.1 The Procuring Entity shall determine to its satisfaction whether the Tenderer that is selected as having submitted the lowest evaluated cost and substantially responsive Tender is eligible and meets the qualifying criteria specified in Section III, Evaluation and Qualification Criteria.

41.2 The determination shall be based upon an examination of the documentary evidence of the Tenderer's qualifications submitted by the Tenderer, pursuant to ITT 15.1. The determination shall not take into consideration the qualifications of other firms such as the Tenderer's subsidiaries, parent entities, affiliates, subcontractors (other than Specialized Subcontractors if permitted in the Tendering document) or any other firm (s) different from the Tenderer.

41.3 An affirmative determination shall be a prerequisite for award of the Contract to the Tenderer. A negative determination shall result in disqualification of the Tender, in which event the Procuring Entity shall proceed to the Tenderer who offers a substantially responsive Tender with the next lowest evaluated cost to make a similar determination of that Tenderer's qualifications to perform satisfactorily.

41.4 The capabilities of the manufacturers and subcontractors proposed in its Tender to be used by the Tenderer with the Lowest Evaluated Tender for identified major items of supply or services will also be evaluated for acceptability in accordance with Section III, Evaluation and Qualification Criteria. Their participation should be confirmed with a Form of intent between the parties, as needed. Should a manufacturer or subcontractor be determined to be unacceptable, the Tender will not be rejected, but the Tenderer will be required to substitute an acceptable manufacturer or subcontractor without any change to the Tender price. Prior to signing the Contract,

The corresponding Appendix to the Contract Agreement shall be completed, listing the approved manufacturers or subcontractors for each item concerned.

42. Procuring Entity's right to Accept Any Tender and to Reject Any or All Tenders

42.1 The Procuring Entity reserves the right to accept or reject any tender, and to annul the Tendering process and reject all Tenders at any time prior to Contract Award, without there by incurring any liability to Tenderers. In case of annulment, all Tenders submitted and specifically, Tender securities shall be promptly returned to the Tenderers.

E. Award of Contract

43. Award Criteria

43.3 Subject to ITT 40, the Procuring Entity shall award the Contract to the successful Tenderer. This is the Tenderer whose Tender has been determined to be the Lowest Evaluated Tender. This is the Tender of the Tenderer that meets the qualification criteria and whose Tender has been determined to be:

a) Substantially responsive to the Tendering Document; and
b) The lowest evaluated cost

44. Notice of Intention to Enter into a Contract/ Notification of Award

44.1 When a Standstill Period applies, it shall commence when the Procuring Entity has transmitted to each Tenderer the Notification of Intention to Award the Contract to the successful Tenderer. The Notification of Intention to Award shall contain, at a minimum, the following information:

a) The name and address of the Tenderer submitting the successful Tender;
b) The Contract price of the successful Tender;
c) A statement of the reason (s) the Tender (of the unsuccessful Tenderer to whom the Form is

addressed) was unsuccessful, unless the price information in c) above already reveals the reason;

d) The expiry date of the Standstill Period; and
e) Instructions on how to request a debriefing and/ or submit a complaint during the standstill period.

45. Standstill Period

45.1 The Contract shall not be signed earlier than the expiry of a Standstill Period of 14 days to allow any dissatisfied tender to launch a complaint. Where only one Tender is submitted, the Standstill Period shall not apply.

45.2 Where a Standstill Period applies, it shall commence when the Procuring Entity has transmitted to each Tenderer the Notification of Intention to enter in to a Contract with the successful Tenderer.

46. Debriefing by the Procuring Entity

46.1 On receipt of the Procuring Entity's Notification of Intention to Enter into a Contract referred to in ITT 43, an unsuccessful tenderer may make a written request to the Procuring Entity for a debriefing on specific issues or concerns regarding their tender. The Procuring Entity shall provide the debriefing within five days of receipt of the request.

46.2 Debriefings of unsuccessful Tenderers may be done in writing or verbally. The Tenderer shall bear its own costs of attending such a debriefing meeting.

47. Letter of Award

47.1 Prior to the expiry of the Tender Validity Period and upon expiry of the Standstill Period specified in ITT 43.1, upon addressing a complaint that has been filed within the Standstill Period, the Procuring Entity shall transmit the Letter of Award to the successful Tenderer. The letter of award shall request the successful tenderer to furnish the Performance Security within 21 days of the date of the letter.

48. Signing of Contract

48.1 Upon the expiry of the fourteen days of the Notification of Intention to enter into contract and upon the parties meeting their respective statutory requirements, the Procuring Entity shall send the successful Tenderer the Contract Agreement.

48.2 Within fourteen (14) days of receipt of the Contract Agreement, the successful Tenderer shall sign, date, and return it to the Procuring Entity.

48.3 The written contract shall be entered into within the period specified in the notification of award and before expiry of the tender validity period

48.4 Notwithstanding ITT 46.2 above, in case signing of the Contract Agreement is prevented by any export restrictions attributable to the Procuring Entity, to the country of the Procuring Entity, or to the use of the Plant and Installation Services to be supplied, where such export restrictions arise from trade regulations from a country supplying those Plant and Installation Services, the Tenderer shall not be bound by its Tender, always provided, however, that the Tenderer can demonstrate to the satisfaction of the Procuring Entity that signing of the Contact Agreement has not been prevented by any lack of diligence on the part of the Tenderer in completing any formalities, including applying for permits, authorizations and licenses necessary for the export of the Plant and Installation Services under the terms of the Contract.

49. Performance Security

49.1 Within twenty-one (21) days of the receipt of the Form of Acceptance from the Procuring Entity, the successful Tenderer shall furnish the Performance Security in accordance with the General Conditions GCC 13.3, subject to ITT 38, using for that purpose the Performance Security Form included in Section X, Contract Forms, or another form acceptable to the Procuring Entity. If the Performance Security furnished by the successful Tenderer is in the form of a bond, it shall be issued by a bonding or insurance company that has been determined by the successful Tenderer to be acceptable to the Procuring Entity. A foreign institution providing a bond shall have a correspondent financial institution located in Kenya, unless the Procuring Entity has agreed in writing that a correspondent financial institution is not required.

49.2 Failure of the successful Tenderer to submit the above-mentioned Performance Security or sign the Contract shall constitute sufficient grounds for the annulment of the award and forfeiture of the Tender Security. In that

event the Procuring Entity may award the Contract to the Tenderer offering the next Best Evaluated Tender.

50. Publication of Procurement Contract

50.1 Within fourteen days after signing the contract, the Procuring Entity shall publish the awarded contract at its notice boards and websites; and on the Website of the Authority. At the minimum, the notice shall contain the following information:

a) Name and address of the Procuring Entity;
b) name and reference number of the contract being awarded, a summary of its scope and the selection method used;
c) The name of the successful Tenderer, the final total contract price, the contract duration.
d) Dates of signature, commencement and completion of contract;
e) Names of all Tenderers that submitted Tenders, and their Tender prices as read out at Tender opening.

51. Appointment of Adjudicator

51.1 The Procuring Entity proposes the person named **in the TDS** to be appointed as Adjudicator under the Contract, at the hourly fee specified **in the TDS**, plus reimbursable expenses. If the Tenderer disagrees with this proposal, the Tenderer should so state in his Tender. If, in the Letter of Acceptance, the Procuring Entity does not agree on the appointment of the Adjudicator, the Procuring Entity will request the Appointing Authority designated in the Special Conditions of Contract (SCC) pursuant to Clause 23.1 of the General Conditions of Contract (GCC), to appoint the Adjudicator.

52. Procurement Related Complaint and Administrative Review

51.1 The procedures for making a Procurement-related Complaint are as specified in the **TDS.**
51.2 A request for administrative review shall be made in the form provided under contract forms.

SECTION II - TENDER DATA SHEET

The following specific data for the Facilities to be procured shall complement, supplement, or amend the provisions in the Instructions to Tenderers (ITT). Whenever there is a conflict, the provisions here in shall prevail over those in ITT.

[Where an e-procurement system is used, modify the relevant parts of the TDS accordingly to reflect thee-procurement process.]

[Instructions for completing the Tender Data Sheet are provided, as needed, in the notes in italics mentioned for the relevant ITT.]

Reference to ITC Clause	**PARTICULARS OF APPENDIX TO INSTRUCTIONS TO TENDERS**
A. General	
ITT 1.1	The reference number of the Invitation to Tender (ITT) is: ***LCG/A26/EDU/10/2026/27***
	The Procuring Entity is: ***COUNTY GOVERNMENT OF LAIKIPIA***
	The name of the ITT is: **PROPOSED SUPPLY, DELIVERY AND INSTALLATION OF ECDE FURNITURE AND PLAY EQUIPMENT FOR ECDE CLASSROOMS IN KABATI (OL MORAN WARD),NJORUA(GITHIGA WARD), MARIAKANI(IGWAMITI WARD) MUTARA ECDE(NGOBIT WARD), KIMURI, RANCH, PP1 AND PP2 ECDE CLASSROOMS IN NGARENGIRO, EMUNGUSHI,LOKUSERO B,PCEA MIRERA, LIKII , NTURUKUMA, ST. MOSES,MATUIKU,MUGUMO AND KALALU..**
	The number and identification of lots (contracts)comprising this ITT is: **[*insert number and identification of lots (contracts) if any]*N/A**
ITT 2.1	The name of the Project is: **PROPOSED SUPPLY, DELIVERY AND INSTALLATION OF ECDE FURNITURE AND PLAY EQUIPMENT FOR ECDE CLASSROOMS IN KABATI (OL MORAN WARD),NJORUA(GITHIGA WARD), MARIAKANI(IGWAMITI WARD) MUTARA ECDE(NGOBIT WARD), KIMURI, RANCH, PP1 AND PP2 ECDE CLASSROOMS IN NGARENGIRO, EMUNGUSHI,LOKUSERO B,PCEA MIRERA, LIKII , NTURUKUMA, ST. MOSES,MATUIKU,MUGUMO AND KALALU**
	Electronic –Procurement System shall **be used. Negotiation number: 2416723**
ITT 4.1	Maximum number of members in the Joint Venture (JV) shall be: *[insert a number]* _____*2*_____.
B. Tendering Document	
ITT 8.1	The pre-tender conference will not be held. The pre-arranged pretender visit of the site of the works will not be held. If it will be held, it will be held on_____(date and time And at _____ Physical Address (City, street, building, Floor/Room number) [insert where *applicable].*

ITT 8.2	Any questions in writing, shall reach the Procuring Entity not later than
ITT 8.4	Minutes of the pre-Tender meeting and the pre-arranged pretender visit of the site of the works will be published at the website _____N/A_____
ITT 9.1	The Procuring Entity shall publish its response at the website

Reference to ITC Clause	**PARTICULARS OF APPENDIX TO INSTRUCTIONS TO TENDERS**
	www.laikipia.go.ke and ppip portal
C. Preparation of Tenders	
ITT 13.1 (j)	The Tenderer shall submit the following additional documents in its Tender: ***[list any additional document not already listed in ITT 11.1 that must be submitted with the Tender]***
ITT 15.1	Alternative Tenders ***["shall not be"]*** considered.
ITT 15.2	Alternatives to the Time Schedule ***"shall not be"*** permitted. If alternatives to the Time Schedule are permitted, the evaluation method will be as specified in Section III, Evaluation and Qualification Criteria.
ITT 15.4	Alternative technical solutions shall be permitted for the following parts of the Plant and Installation Services: ***[insert parts of the Plant] _N/A____*** as further detailed in the Specification. If alternative technical solutions are permitted, the evaluation method will be as specified in Section III, Evaluation and Qualification Criteria.
ITT 19.1	Tenderers shall quote for the following components or services on a single responsibility basis: _____ **and/or** The following components or services will be provided under the responsibility of the Procuring Entity: _____
ITT 19.5 (a) and (d)	Place of destination: **[*insert named place of destination as per Incoterm used]*** Final destination (Project Site): _____***[insert final destination, if different from named place of destination]***
ITT 19.6	The Incoterms edition is: ***[insert relevant edition].***
ITT 19.7	The prices quoted by the Tenderer ***shall not*** _____ be subject to adjustment during the performance of the Contract.

ITT 20.1	The Tenderer **[*insert "is"*]** _____required to quote in Kenya Currency the portion of the Tender price that corresponds to expenditures incurred in that currency.
ITT 21.1	The Tender validity period shall be ***120*** days.
ITT 21.3 (a)	The Tender price shall be adjusted by the following factor(s): ____N/A_____ ***[The local currency portion of the Contract price shall be adjusted by a factor reflecting local inflation during the period of extension, and the foreign currency portion of the Contract price shall be adjusted by a factor reflecting the international inflation (in the country of the foreign currency) during the period of extension.]***

Reference to ITC Clause	**PARTICULARS OF APPENDIX TO INSTRUCTIONS TO TENDERS**
ITT 22.1	***[If a Tender Security shall be required, a Tender-Securing Declaration shall not be required, and vice versa.]*** A Tender Security ***shall be*** required. A Tender-Securing Declaration ***shall be*** required. **[*If a Tender Security is required, insert amount and currency of the Tender Security. Otherwise insert "Not Applicable".] [In case of lots, please insert amount and currency of the Tender Security for each lot]*** ***Note: Tender Security is required for each lot as per amounts indicated against each lot. Tenderers have the option of submitting one Tender Security for all lots (for the combined total amount of all lots) for which Tenders have been submitted, however if the amount of Tender Security is less than the total required amount, the Procuring Entity will determine for which lot or lots the Tender Security amount shall be applied.]***
ITT 23.1	In addition to the original of the Tender, the number of copies is**: *[2 copies].***
ITT 23.3	The written confirmation of authorization to sign on behalf of the Tenderer shall consist of: ***[insert the name and description of the documentation required to demonstrate the authority of the signatory to sign the Tender].***
D. Submission and Opening of Tenders	

ITT 25.1	For **Tender submission purposes** only, the Procuring Entity's address is: ***[This address may be the same as or different from that specified under provision ITT 7.1 for clarifications]*** Attention: ***[insert full name of person, if applicable]*** Physical Address (*City, Street name, Building name, Floor and Room numbers*) ***[The time allowed for the preparation and submission of Tenders shall be determined with due consideration to the particular circumstances of the project and the magnitude and complexity of the procurement. The period allowed shall be at least thirty (30) Business Days.*** **The deadline for Tender submission is:** Date: ***[27TH NOVEMBER, 2026]*** **Time*: [12:00 P.M]*** ***[The date and time should be the same as those provided in the Specific Procurement Notice - Request for Tenders, unless subsequently amended pursuant to ITT 23.2]*** Tenderers **[*"shall"*]** have the option of submitting their Tenders **BOTH** manually and electronically. Via Negotiation number:2416723-2026/27 **[*The following provision should be included and the required corresponding information inserted only if Tenderers have the option of submitting their Tenders electronically. Otherwise omit.]*** The electronic Tendering submission procedures shall be: ***[insert a description of the electronic Tendering submission procedures.] Negotiation number: 2416723-2026/27***
ITT 28.1	The Tender opening shall take place at:

Reference to ITC Clause	**PARTICULARS OF APPENDIX TO INSTRUCTIONS TO TENDERS**
	Physical Address (Rumuruti Headquarter at the Treasury offices near Head of Supply Chain Management Office) ,Laikipia county Headquarters offices Date: ***[27TH NOVEMBER, 2026]*** Time: ***[12:00 pm]***
ITT 28.6	The Form of Tender and Price Schedules shall be initialed by _____***[3]*** representatives of the Procuring Entity conducting Tender opening. ***Each Tender shall be initialed by all representatives and shall be numbered, any modification to the unit or total price shall be initialed by the Representative of the Procuring Entity***
E. Evaluation, and Comparison of Tenders	
ITT 33.3	The adjustment shall be based on the _____**[*insert "average" or 'highest"]*** price of the item or component as quoted in other substantially responsive Tenders. If the price of the item or component cannot be derived from the price of other substantially responsive Tenders, the Procuring Entity shall use its best estimate.
ITT 34.2	The error shall be determined as a major deviation if it is more than _____% or less than _____%**.**

ITT 35.1	The currency that shall be used for Tender evaluation and comparison purposes to convert (at the selling exchange rate) all Tender prices expressed in various currencies into a single currency is: Kenya shillings The source of exchange rate shall be: ***The Central Bank in*** Kenya The date for the exchange rate shall be*: **[21st January, 2026 not earlier than 28 days prior to the deadline for submission of the Tenders, nor later than the original date for the expiry of Tender validity].***
ITT 36.2	A margin of preference **shall be** allowed.
ITT 37.4 (e)	The adjustments shall be determined using the following criteria, from amongst those set out in Section III, Evaluation and Qualification Criteria: ***[refer to Section III, Evaluation and Qualification Criteria; insert complementary details if necessary]*** (a) Deviation in Time for Completion: ***[insert Yes or No. If yes insert the adjustment factor in Section III, Evaluation and Qualification Criteria];*** (b) Life cycle costs: the projected operating and maintenance costs during the life of the goods or equipment ***[insert Yes or No, if yes, insert the Methodology and criteria in Section III, Evaluation and Qualification Criteria];*** (c) Functional Guarantees of the Facilities ***[insert Yes or No, If Yes, insert methodology and criteria in Section III, Evaluation and Qualification Criteria]*** (d) Work, services, facilities, etc., to be provided by the Procuring Entity ***[insert Yes or No, if yes, insert the Methodology and criteria in Section III, Evaluation and Qualification Criteria];*** (e) ***[insert any other specific criteria here and provide details in Section III, Evaluation and Qualification Criteria]***

Reference to ITC Clause	**PARTICULARS OF APPENDIX TO INSTRUCTIONS TO TENDERS**
ITT 37.6	Tenderers shall **not be allowed** (*select one)* to quote separate prices for different lots (contracts) and the methodology to determine the lowest tenderer is specified in Section III, Evaluation and Qualification Criteria.
ITT 45 **Standstill Period**	The Standstill Period is____10____Business Days ***[note: the minimum number of Business Days is ten (10)]*** after the date the Procuring Entity has transmitted to all Tenderers that submitted a Tender, the Notification of its Intention to Award the Contract to the successful Tenderer. ***[State 'No Standstill Period applies to this Tendering process.' If this Tendering process is in response to an emergency situation recognized by the Procuring Entity']***
ITT 51	The hourly fee specified **is** _____plus reimbursable expenses.

ITT 52.1	The procedures for making a Procurement-related Complaint are detailed in the "Notice of Intention to Award the Contract" herein and are also available from the PPRA website info@ppra.go.ke or complaints@ppra.go.ke. **For the attention**: *[insert full name of person receiving complaints]* **Title/position**: *[insert title/position]* **Procuring Entity**: *[insert name of Procuring Entity]* **Email address***: [insert email address]* In summary, a Procurement-related Complaint may challenge any of the following: **1.** the terms of the Tendering Documents; and **2.** the Procuring Entity's decision to award the contract.

SECTION III - EVALUATION AND QUALIFICATION CRITERIA

1. General Provision

1.2 Wherever a Tenderer is required to state a monetary amount, Tenderers should indicate the Kenya Shilling equivalent using the rate of exchange determined as follows:

a. For construction turn over or financial data required for each year -Exchange rate prevailing on the last day of the respective calendar year (in which the amounts for that year is to be converted) was originally established.
b. Value of single contract -Exchange rate prevailing on the date of the contract signature.
c. Exchange rates shall be taken from the publicly available source identified in the ITT 33.1. Any error in determining the exchange rates in the Tender may be corrected by the Procuring Entity.

1.3 This section contains the criteria that the Procuring Entity shall use to evaluate tender and qualify tenderers. No other factors, methods or criteria shall be used other than specified in this tender document. The Tenderer shall provide all the information requested in the forms included in Section IV, Tendering Forms. The Procuring Entity should use **the Standard Tender Evaluation Report for Goods and Works** for evaluating Tenders.

1.4 Evaluation and contract award Criteria

1.4 The Procuring Entity shall use the criteria and methodologies listed in this Section to evaluate tenders and arrive at the Lowest Evaluated Tender. The tender that (i) meets the qualification criteria, (ii) has been determined to be substantially responsive to the Tender Documents, and (iii) is determined to have the Lowest Evaluated Tender price shall be selected for award of contract.

2 Preliminary examination for Determination of Responsiveness

The Procuring Entity will start by examining all tenders to ensure they meet in all respects the eligibility criteria (including requirements in the qualification forms, tenderer's eligibility- confidential business questionnaire) and other requirements in the ITT and that the tender is complete in all aspects in meeting the requirements of *"Part 2 - Procuring Entity's Requirements"*, including checking for tenders with unacceptable errors, abnormally low tenders, and abnormally high tenders. The Standard Tender Evaluation Report for Goods and Works provides clear guidelines on how to deal with review of these requirements. Tenders that do not pass the Preliminary Examination will not be considered further.

3 *Evaluation*

3.1 **Technical Evaluation**

In addition to the criteria listed in ITT 35.2(a) - c) the following factors shall apply:

……

…….....

Tenders that fail technical evaluation will not be considered further.

3.2 *Economic Evaluation*

Price evaluation: in addition to the criteria listed in ITT 35.4 (a) – (e) the following criteria shall apply:

i) **Alternative Completion Times, i**f permitted under ITT 13.2, will be evaluated as follows:
……

ii) Alternative technical solutions for specified parts

The acceptability of alternative technical solutions for parts of the facilities, if permitted under ITT 13.4, will be determined as follows:

……

……...

iii) Life Cycle Costs

[Lifecycle costing should be used when the costs of operation and/ or maintenance over the specified life of the goods or works are estimated to be considerable in comparison with the initial cost and may vary among different Tenders/proposals. It shall be evaluated on a net present value basis. When using lifecycle costing, the Procuring Entity shall specify the following information:]

Since the operating and maintenance costs of the facilities being procured form a major part of the **life cycle cost** of the facilities, these costs will be evaluated according to the principles given here after, including the cost of spare parts for the initial period of operation stated below and based on prices furnished by each Tenderer in Price Schedule Nos. 1 and 2, as well as on past experience of the Procuring Entity or other Procuring Entity's similarly placed. Such costs shall be added to the Tender price for evaluation. The operating and maintenance costs factors for calculation of the life cycle cost are:

i) Number of years for lifecycle:_____*[Insert number of years]*
ii) Operating costs *[state how they will be determined]*
iii) Maintenance costs, including the cost of spare parts for the initial period of operation *[state how they will be determined],* and
iv) Discount rate:_____*[insert discount rate in percent]* to be used to discount to present value all annual future costs calculated under (ii) and (iii) above for the period specified in (i).

The price of recommended spare parts quoted in Price Schedule No.6 shall not be considered for evaluation.

(v) Functional Guarantees of the Facilities

The minimum (or maximum) requirements stated in the Specification for functional guarantees required in the Specification are:

Functional Guarantee	**Minimum (or Maximum, as appropriate) Requirement**
1.	
2.	
3.	
...	

For the purposes of evaluation, for each percentage point that the functional guarantee of the proposed Plant and Installation Services is below the norm specified in the Specification and in the above table, but above the minimum acceptable levels also specified there in, an adjustment of_____will be added to the Tender price. If the drop below the norm or the excess above the minimum acceptable levels is less than one percent, the adjustment will be appropriated accordingly.

vi) Work, services, facilities, etc., to be provided by the Procuring Entity.

Where Tenders include the under taking of work or the provision of services or facilities by the Procuring Entity in excess of the provisions allowed for in the Tendering document, the Procuring Entity shall assess the costs of such additional work, services and/or facilities during the duration of the contract. Such costs shall be added to the Tender price for evaluation.

vii) Specific addition criteria The relevant evaluation method, if any, shall be as follows:
.....

Any adjustments in price that result from the above procedures shall be added, for purposes of comparative evaluation only, to arrive at an "Evaluated Tender Price." Tender prices quoted by Tenderers shall remain unaltered.

4 Multiple Contracts (ITT 35.6)

4.1 Multiple contracts will be permitted in accordance with ITT 35.4. Tenderers are evaluated on basis of Lots and the lowest evaluated tenderer identified for each Lot. The Procuring Entity will select one Option of the two Options listed below for award of Contracts.

OPTION1

i) If a tenderer wins only one Lot, the tenderer will be awarded a contract for that Lot, provided the tenderer meets the Eligibility and Qualification Criteria for that Lot.

ii) If a tenderer wins more than one Lot, the tender will be awarded contracts for all won Lots, provided the tenderer meets the aggregate Eligibility and Qualification Criteria for all the Lots. The tenderer will be awarded the combination of Lots for which the tenderer qualifies and the others will be considered for award to second lowest the tenderers.

OPTION 2

The Procuring Entity will consider all possible combinations of won Lots [contract(s)] and determine the combinations with the lowest evaluated price. Tenders will then be awarded to the Tenderer or Tenderers in the combinations provided the tenderer meets the aggregate Eligibility and Qualification Criteria for all the won Lots.

5 **MARGIN OF PREFERENCE**

5.1 If the **TDS** so specifies, the Procuring Entity will grant a margin of preference of 15% (fifteen percent) to Tenderers offering goods manufactured, mined, extracted, grown, assembled or semi-processed in Kenya. Goods assembled or semi-processed in Kenya shall have a local content of not less than 40%.

5.2 The margin of preference will be applied in accordance with, and subject to, the following provisions:

a Tenderers applying for such preference on goods offered shall be asked to provide, as part of the data for qualification, such information, including details of the goods produced in Kenya, so as to determine whether, according to the classification established by the Procuring Entity, a particular category of goods or group of goods qualifies for a margin of preference.

b After Tenders have been received and reviewed by the Procuring Entity, goods offered in the responsive Tenders shall be assessed to ascertain they are manufactured, mined, extracted, grown, assembled or semi-processed in Kenya. Responsive tenders shall be classified in to the following groups:

i) **Group A:** Tenders offering goods manufactured in Kenya, for which (a) labor, raw materials, and components from within Kenya account for more than forty (40) percent of the Ex-Works price; and the production facility in which they will be manufactured or assembled has been engaged in manufacturing or assembling such goods at least since the date of Tender submission date;

ii) **Group B:** All other Tenders offering Goods manufactured in Kenya;

iii) **Group C:** Tenders offering Goods manufactured outside Kenya that have been already imported or that will be imported.

5.3 To facilitate this classification by the Procuring Entity, the tenderer shall complete whichever version of the Price Schedule furnished in the Tendering document is appropriate, provided however, that the completion of an in correct version of the Price Schedule by the Tenderer shall not result in rejection of its Tender, but merely in the Procuring Entity's reclassification of the Tender into its appropriate Tender group.

5.4 The Tenders in each group will then be compared to determine the Tender with the lowest evaluated cost in that group. The lowest evaluated cost Tender from each group shall then be compared with each other and if as a result of this comparison a Tender from Group A or Group B is the lowest, it shall be selected for the award.

5.5 If as a result of the preceding comparison, a Tender from Group C is the lowest evaluated cost, an amount equal to or 15% of the respective tender price, including unconditional discounts and excluding provisional sums, if any, shall be added to the evaluated price offered in each tender from Group C. If the tender from Group C is still the lowest tender, it shall be selected for award. If not, the lowest evaluated tender from Group A or B based on the first evaluation price shall be selected.

6 Alternative Tenders (ITT 13.1)

An alternative if permitted under ITT 13.1, will be evaluated as follows:

The Procuring Entity shall consider Tenders offered for alternatives as specified in Part 2- Procuring Entity's requirements. Only the technical alternatives, if any, of the Tenderer with the Best Evaluated Tender conforming to the basic technical requirements shall be considered by the Procuring Entity.

7 Post qualification and Contract award (ITT 39), more specifically,

a) In case the tender was subject to post-qualification, the contract shall be awarded to the lowest evaluated tenderer, subject to confirmation of prequalification data, if so required.

b) In case the tender was not subject to post-qualification, the tender that has been determined to be the lowest evaluated tenderer shall be considered for contract award, subject to meeting each of the following conditions.

i) The Tenderer shall demonstrate that it has access to, or has available, liquid assets, unencumbered real assets, lines of credit, and other financial means (independent of any contractual advance payment) sufficient to meet the construction cash flow of Kenya Shillings_____

ii) Minimum average annual construction turnover of Kenya Shillings_____*[insert amount]*, equivalent calculated as total certified payments received for contracts in progress and/ or completed within the last_____*[insert of year]* years.

iii) At least_____(*insert number)* of contract (s) of a similar nature executed within Kenya, or the East African Community or abroad, that have been satisfactorily and substantially completed as a prime contractor, or joint venture member or sub-contractor each of minimum value Kenya shillings equivalent.

iv) Contractor's Representative and Key Personnel, which are specified as_____

v) Contractors key equipment listed on the table "Contractor's Equipment" below and more specifically listed as *[specify requirements for each lot as applicable]*_____

iv) Other conditions depending on their seriousness.

a) History of non-performing contracts:
Tenderer and each member of JV in case the Tenderer is a JV, shall demonstrate that Non-performance of a contract did not occur because of the default of the Tenderer, or the member of a JV in the last_____(*specify years*). The required information shall be furnished in the appropriate form.

b) Pending Litigation
Financial position and prospective long-term profitability of the Single Tenderer, and in the case the Tenderer is a JV, of each member of the JV, shall remain sound according to criteria established with respect to Financial Capability under Paragraph (i) above i fall pending litigation will be resolved against the Tenderer. Tenderer shall provide information on pending litigations in the appropriate form.

c) Litigation History
There shall be no consistent history of court/ arbitral award decisions against the Tenderer, in the last_____(*specify years*). All parties to the contract shall furnish the information in the appropriate form about any litigation or arbitration resulting from contracts completed or ongoing under its execution over the years specified. A consistent history of awards against the Tenderer or any member of a JV may result in rejection of the tender.

8. Qualification

Evaluation Criteria – Open Tender for Supply, Delivery and Installation of ECDE Furniture and Play Equipment, FY 2026/27

County Government of Laikipia – Department of Education, Vocational Training and Library Services
Aligned with PPADA 2015 ss. 80(2)–(3) and PPADR 2020 (particularly Regulations 74–77, 143, 145, 147 and 151). Evaluation is in three stages: Preliminary (pass/fail) → Technical (pass/fail compliance + scored capacity) → Financial. A bidder must pass each stage to proceed to the next.
Scope (single lot): 510 learner chairs, 85 hexagonal learner tables, 11 teacher's tables, 11 teacher's chairs, 11 swing sets and 11 slides, delivered to 16 ECDE centres per the distribution list; swings and slides installed and tested on site.

Stage 1 – Preliminary / Mandatory Evaluation (Pass/Fail)

A bidder must meet **all** of the following. Failure of any item results in disqualification.

No.	Requirement	Assessment
MR1	Certificate of Incorporation / Registration	Pass / Fail
MR2	Valid Tax Compliance Certificate	Pass / Fail
MR3	CR12 (issued within the last 6 months) or equivalent ownership documents	Pass / Fail
MR4	Current Single Business Permit (any Kenyan county)	Pass / Fail
MR5	Tender Security in the form and amount stated in the tender document (not exceeding 2% of the estimated value), from an acceptable institution and valid for the period required; **or** a signed Tender Securing Declaration where the tender is reserved for AGPO groups	Pass / Fail
MR6	Duly filled, signed and stamped Form of Tender	Pass / Fail
MR7	Duly filled, signed and stamped Price Schedule / Bill of Quantities for all items	Pass / Fail
MR8	Duly filled and signed Confidential Business Questionnaire	Pass / Fail
MR9	Signed Self-Declaration form(s) and Declaration on Fraud and Corruption, as provided in the tender document	Pass / Fail
MR10	Signed Disclosure of Interest / Conflict of Interest form	Pass / Fail
MR11	Tender validity period not less than that stated in the tender document	Pass / Fail
MR12	Valid AGPO certificate (**only** where the tender is reserved for youth, women or persons with disability)	Pass / Fail

Notes:

- The Single Business Permit is a compliance document only. It is **not** scored, and no extra marks are given for a Laikipia County permit.
- Only requirements actually stated in the tender document may be applied. If pagination/serialisation is to be mandatory, it must be stated clearly in the tender document; otherwise do not disqualify on it.
- Delete MR12 if the tender is not reserved.

Stage 2 – Technical Evaluation

Only bidders who pass Stage 1 are evaluated. A bidder must pass **every** item in Part A **and** score at least **70 out of 100** in Part B.

Part A – Compliance with Technical Specifications (Pass/Fail)

Each item is checked against the specifications in the tender. The bidder must fill the Compliance Sheet (Annex A), stating the offered specification for each item, supported by a catalogue, brochure, drawings or clear photographs. Writing only "complied" or "as specified" is treated as non-compliance unless the tender document expressly allows it. As this is a single lot, failure on any item makes the tender non-responsive.

No.	Item (Qty)	Requirements to be verified	Assessment
TA1	Learner table – hexagonal (85)	Hexagonal design; solid, good-quality, well-seasoned cypress free from insect attack and deformity; top tongue-and-groove; legs to rails haunched mortise and tenon secured with wood glue and dowels; frame to top fixed with wood screws from below; sanded smooth; painted in the specified colours; rounded corners; no protruding screws	Pass / Fail
TA2	Learner chair – rectangular (510)	Rectangular design; same timber requirement as TA1; seat tongue-and-groove; legs to rails haunched mortise and tenon with wood glue and dowels; back to frame mortise and tenon; sanded smooth; painted in the specified colours; rounded corners; no protruding screws	Pass / Fail
TA3	Teacher's table – rectangular (11)	Same timber and joint requirements as TA1; drawer opening outward with smooth sliding action, lockable, with knob; sanded smooth; painted; rounded corners; no protruding screws	Pass / Fail
TA4	Teacher's chair – rectangular (11)	Same timber and joint requirements as TA2; back to frame mortise and tenon; sanded smooth; painted; rounded corners; no protruding screws	Pass / Fail
TA5	ECDE swing set (11) – supply, installation and testing	Galvanised steel frame; overall height 2,000 mm; overall length 2,200 mm; posts 50 × 50 mm; seat height 350–400 mm; seat size 450 × 180 mm; seat spacing 600 mm centre to centre; minimum 350 mm frame-to-seat clearance; 6 mm chains with finger-trap guards; design load 50 kg per seat; fall height ≤ 1.5 m; no sharp edges or protruding bolts; concrete footings 450 × 450 × 450 mm, mix 1:2:4; 1.5 m clear safety zone	Pass / Fail
TA6	ECDE slide (11) – supply, installation and testing	Galvanised steel frame; sliding surface smooth GI sheet gauge 16 (1.6 mm), riveted to the frame; galvanised M12 × 150 mm bolts with galvanised nuts and spring washers; all bolt ends capped or recessed; concrete footings 450 × 450 × 450 mm, mix 1:2:4	Pass / Fail
TA7	Samples	One sample each of the learner chair (TA2) and learner table (TA1) submitted by the tender closing date, conforming to the written specifications. Assessed using a checklist prepared before opening and signed by the evaluation committee	Pass / Fail
TA8	Delivery and installation period	Signed commitment to deliver to all 16 ECDE centres, and install and test swings and slides at the 11 designated centres, within ___ days of contract signing	Pass / Fail
TA9	Warranty	Signed warranty of not less than ___ months against defective materials and workmanship, including replacement at the supplier's cost	Pass / Fail

Part B – Capacity to Perform (Scored – 100 marks)

No.	Criterion	Evidence required	Scoring	Max
TB1	Past experience in supply of similar goods in the last 5 years	Copies of LPOs/contracts **plus** delivery notes, inspection & acceptance certificates or client completion letters	1 assignment = 10; 2 = 20; 3 = 30; 4 or more = 40	40
TB2	Financial capacity	Audited accounts for the last 2 years **or** certified bank statements for the last 6 months	Average annual turnover (or average monthly balance × 12) ≥ Kshs ___ (estimated tender	30

No.	Criterion	Evidence required	Scoring	Max
			value) = 30; ≥ 50% of that value = 20; < 50% with evidence = 10; no evidence = 0	
TB3	Production capacity	Proof of own or leased workshop (title deed/lease agreement) with photographs and list of key tools/machinery	Both a carpentry and a metal fabrication workshop = 20; one of the two = 10; none = 0	20
TB4	Delivery and installation work plan	Schedule showing delivery to each of the 16 centres and installation/testing at the 11 centres within the TA8 period	Complete schedule covering delivery and installation = 10; delivery only = 5; none = 0	10
	Total			**100**

- "Similar" means supply and delivery of school/ECDE furniture and/or outdoor play equipment to a public or private institution, of comparable scope.
- An assignment is counted once, even if supported by several documents.
- No marks are awarded for key personnel, business permits or other mandatory documents.
- **Minimum technical score to proceed to financial evaluation: 70 marks.**

Stage 3 – Financial Evaluation

1. Only bidders who pass Stage 1, pass every Part A item and score at least 70 marks in Part B are evaluated.
2. Check that every item in the Price Schedule is priced. An unpriced item makes the tender non-responsive unless the tender document says otherwise.
3. Correct arithmetic errors in accordance with the Regulations (unit price prevails over total, unless the tender document says otherwise); a bidder who rejects the correction is disqualified.
4. Prices must be inclusive of all taxes, delivery to the 16 ECDE centres, offloading, and installation and testing of swings and slides (including concrete footings).
5. Compare the evaluated prices with the market survey / budget and check for abnormally low tenders as provided in the Regulations.
6. Award to the **lowest evaluated responsive tender** for the whole lot.

Preference and Reservation Schemes

- Apply only the lawful preference and reservation schemes under PPADR 2020 (Regulations 143, 145, 147 and 151), and only where the tender was reserved or the preference was clearly stated in the tender document.
- Do **not** award marks merely for holding a Laikipia County business permit.
- Where exclusive county preference is intended, it must be applied strictly under Regulation 151 and disclosed in the tender document before submission.

Post-Qualification / Due Diligence

Before award, the evaluation committee may confirm the recommended bidder's documents (tax compliance, tender security, past contracts) and visit its workshop to confirm the TB3 evidence. If due diligence fails, the next lowest evaluated responsive bidder is considered.

Capacity Building Levy (0.03%)

Not an evaluation criterion. Payable by the successful supplier on the signed contract value (exclusive of taxes) and deducted at source on payment. Do not score or disqualify on this item.

Inspection and Acceptance (after award)

The Inspection and Acceptance Committee inspects the goods at each ECDE centre against the same specifications and the approved samples before acceptance and payment. Swings and slides are accepted only after on-site installation and load/safety testing. Non-conforming items are replaced at the supplier's cost.

Summary of the Evaluation Structure

Stage	Requirement	Assessment
Preliminary	MR1–MR12 mandatory documents	Pass / Fail
Technical – Part A	TA1–TA9 compliance with specifications,	Pass / Fail

Stage	Requirement	Assessment
	samples, delivery, warranty	
Technical – Part B	TB1–TB4 capacity	100 marks (minimum 70)
Financial	Evaluated tender price	Lowest evaluated responsive tender

Annex A – Technical Compliance Sheet (to be filled by bidder)

Item	Description	Qty	Required specification	Offered specification	Complies (Yes/No)	Evidence (page no.)
1	Learner table – hexagonal	85	As TA1			
2	Learner chair – rectangular	510	As TA2			
3	Teacher's table	11	As TA3			
4	Teacher's chair	11	As TA4			
5	Swing set (installed)	11	As TA5			
6	Slide (installed)	11	As TA6			

Corrections Needed in the Specifications Before Advertising

- **Distribution list:** the "Students table" and "students chair" columns are swapped — each centre shows 30 tables and 5 chairs, but the totals (510 and 85) match 30 chairs and 5 tables per centre.
- **No dimensions for the furniture:** the learner/teacher tables and chairs have no height, seat or top sizes. Without them, bidders cannot be checked fairly on size. Add dimensions suitable for ECDE learners.
- **No dimensions for the slide:** add platform height, slide length and width, ladder and handrails.
- **Swing top beam "50 × 500 mm"** looks like a typo (posts are 50 × 50 mm); confirm the beam size.
- **Paint:** specify lead-free, non-toxic paint; "Green" is listed twice in the colours.
- **Chairs:** "Frame to top" should read "Frame to seat"; the joints list has two items numbered "iii".
- **Typos:** "Hunched" → "Haunched"; "srews" → "screws"; "Lokable" → "Lockable".
- **Fill in:** delivery period (TA8), warranty period (TA9), estimated value for TB2, and the tender security amount (MR5).

Evaluation Criteria – Open Tender for Supply, Delivery and Installation of ECDE Furniture and Play Equipment, FY 2026/27

County Government of Laikipia – Department of Education, Vocational Training and Library Services
Aligned with PPADA 2015 ss. 80(2)–(3) and PPADR 2020 (particularly Regulations 74–77, 143, 145, 147 and 151). Evaluation is in three stages: Preliminary (pass/fail) → Technical (pass/fail compliance + scored capacity) → Financial. A bidder must pass each stage to proceed to the next.
Scope (single lot): 510 learner chairs, 85 hexagonal learner tables, 11 teacher's tables, 11 teacher's chairs, 11 swing sets and 11 slides, delivered to 16 ECDE centres per the distribution list; swings and slides installed and tested on site.

Stage 1 – Preliminary / Mandatory Evaluation (Pass/Fail)

A bidder must meet **all** of the following. Failure of any item results in disqualification.

No.	Requirement	Assessment
MR1	Certificate of Incorporation / Registration	Pass / Fail
MR2	Valid Tax Compliance Certificate	Pass / Fail
MR3	CR12 (issued within the last 6 months) or equivalent ownership documents	Pass / Fail
MR4	Current Single Business Permit (any Kenyan county)	Pass / Fail
MR5	Tender Security in the form and amount stated in the tender document (not exceeding 2% of the estimated value), from an acceptable institution and valid for the period required; **or** a signed Tender Securing Declaration where the tender is reserved for AGPO groups	Pass / Fail
MR6	Duly filled, signed and stamped Form of Tender	Pass / Fail
MR7	Duly filled, signed and stamped Price Schedule / Bill of Quantities for all items	Pass / Fail
MR8	Duly filled and signed Confidential Business Questionnaire	Pass / Fail

No.	Requirement	Assessment
MR9	Signed Self-Declaration form(s) and Declaration on Fraud and Corruption, as provided in the tender document	Pass / Fail
MR10	Signed Disclosure of Interest / Conflict of Interest form	Pass / Fail
MR11	Tender validity period not less than that stated in the tender document	Pass / Fail
MR12	Valid AGPO certificate (**only** where the tender is reserved for youth, women or persons with disability)	Pass / Fail

Notes:

- The Single Business Permit is a compliance document only. It is **not** scored, and no extra marks are given for a Laikipia County permit.
- Only requirements actually stated in the tender document may be applied. If pagination/serialisation is to be mandatory, it must be stated clearly in the tender document; otherwise do not disqualify on it.
- Delete MR12 if the tender is not reserved.

Stage 2 – Technical Evaluation

Only bidders who pass Stage 1 are evaluated. A bidder must pass **every** item in Part A **and** score at least **70 out of 100** in Part B.

Part A – Compliance with Technical Specifications (Pass/Fail)

Each item is checked against the specifications in the tender. The bidder must fill the Compliance Sheet (Annex A), stating the offered specification for each item, supported by a catalogue, brochure, drawings or clear photographs. Writing only "complied" or "as specified" is treated as non-compliance unless the tender document expressly allows it. As this is a single lot, failure on any item makes the tender non-responsive.

No.	Item (Qty)	Requirements to be verified	Assessment
TA1	Learner table – hexagonal (85)	Hexagonal design; solid, good-quality, well-seasoned cypress free from insect attack and deformity; top tongue-and-groove; legs to rails haunched mortise and tenon secured with wood glue and dowels; frame to top fixed with wood screws from below; sanded smooth; painted in the specified colours; rounded corners; no protruding screws	Pass / Fail
TA2	Learner chair – rectangular (510)	Rectangular design; same timber requirement as TA1; seat tongue-and-groove; legs to rails haunched mortise and tenon with wood glue and dowels; back to frame mortise and tenon; sanded smooth; painted in the specified colours; rounded corners; no protruding screws	Pass / Fail
TA3	Teacher's table – rectangular (11)	Same timber and joint requirements as TA1; drawer opening outward with smooth sliding action, lockable, with knob; sanded smooth; painted; rounded corners; no protruding screws	Pass / Fail
TA4	Teacher's chair – rectangular (11)	Same timber and joint requirements as TA2; back to frame mortise and tenon; sanded smooth; painted; rounded corners; no protruding screws	Pass / Fail
TA5	ECDE swing set (11) – supply, installation and testing	Galvanised steel frame; overall height 2,000 mm; overall length 2,200 mm; posts 50 × 50 mm; seat height 350–400 mm; seat size 450 × 180 mm; seat spacing 600 mm centre to centre; minimum 350 mm frame-to-seat clearance; 6 mm chains with finger-trap guards; design load 50 kg per seat; fall height ≤ 1.5 m; no sharp edges or protruding bolts; concrete footings 450 × 450 × 450 mm, mix 1:2:4; 1.5 m clear safety zone	Pass / Fail
TA6	ECDE slide (11) – supply, installation and testing	Galvanised steel frame; sliding surface smooth GI sheet gauge 16 (1.6 mm), riveted to the frame; galvanised M12 × 150 mm bolts with galvanised nuts and spring washers; all bolt ends capped or recessed; concrete footings 450 × 450 × 450 mm, mix 1:2:4	Pass / Fail

No.	Item (Qty)	Requirements to be verified	Assessment
TA7	Samples	One sample each of the learner chair (TA2) and learner table (TA1) submitted by the tender closing date, conforming to the written specifications. Assessed using a checklist prepared before opening and signed by the evaluation committee	Pass / Fail
TA8	Delivery and installation period	Signed commitment to deliver to all 16 ECDE centres, and install and test swings and slides at the 11 designated centres, within ___ days of contract signing	Pass / Fail
TA9	Warranty	Signed warranty of not less than ___ months against defective materials and workmanship, including replacement at the supplier's cost	Pass / Fail

Part B – Capacity to Perform (Scored – 100 marks)

No.	Criterion	Evidence required	Scoring	Max
TB1	Past experience in supply of similar goods in the last 5 years	Copies of LPOs/contracts **plus** delivery notes, inspection & acceptance certificates or client completion letters	1 assignment = 10; 2 = 20; 3 = 30; 4 or more = 40	40
TB2	Financial capacity	Audited accounts for the last 2 years **or** certified bank statements for the last 6 months	Average annual turnover (or average monthly balance × 12) ≥ Kshs ___ (estimated tender value) = 30; ≥ 50% of that value = 20; < 50% with evidence = 10; no evidence = 0	30
TB3	Production capacity	Proof of own or leased workshop (title deed/lease agreement) with photographs and list of key tools/machinery	Both a carpentry and a metal fabrication workshop = 20; one of the two = 10; none = 0	20
TB4	Delivery and installation work plan	Schedule showing delivery to each of the 16 centres and installation/testing at the 11 centres within the TA8 period	Complete schedule covering delivery and installation = 10; delivery only = 5; none = 0	10
	Total			**100**

- "Similar" means supply and delivery of school/ECDE furniture and/or outdoor play equipment to a public or private institution, of comparable scope.
- An assignment is counted once, even if supported by several documents.
- No marks are awarded for key personnel, business permits or other mandatory documents.
- **Minimum technical score to proceed to financial evaluation: 70 marks.**

Stage 3 – Financial Evaluation

7. Only bidders who pass Stage 1, pass every Part A item and score at least 70 marks in Part B are evaluated.
8. Check that every item in the Price Schedule is priced. An unpriced item makes the tender non-responsive unless the tender document says otherwise.
9. Correct arithmetic errors in accordance with the Regulations (unit price prevails over total, unless the tender document says otherwise); a bidder who rejects the correction is disqualified.
10. Prices must be inclusive of all taxes, delivery to the 16 ECDE centres, offloading, and installation and testing of swings and slides (including concrete footings).
11. Compare the evaluated prices with the market survey / budget and check for abnormally low tenders as provided in the Regulations.
12. Award to the **lowest evaluated responsive tender** for the whole lot.

Preference and Reservation Schemes

- Apply only the lawful preference and reservation schemes under PPADR 2020 (Regulations 143, 145, 147 and 151), and only where the tender was reserved or the preference was clearly stated in the tender document.

- Do **not** award marks merely for holding a Laikipia County business permit.
- Where exclusive county preference is intended, it must be applied strictly under Regulation 151 and disclosed in the tender document before submission.

Post-Qualification / Due Diligence

Before award, the evaluation committee may confirm the recommended bidder's documents (tax compliance, tender security, past contracts) and visit its workshop to confirm the TB3 evidence. If due diligence fails, the next lowest evaluated responsive bidder is considered.

Capacity Building Levy (0.03%)

Not an evaluation criterion. Payable by the successful supplier on the signed contract value (exclusive of taxes) and deducted at source on payment. Do not score or disqualify on this item.

Inspection and Acceptance (after award)

The Inspection and Acceptance Committee inspects the goods at each ECDE centre against the same specifications and the approved samples before acceptance and payment. Swings and slides are accepted only after on-site installation and load/safety testing. Non-conforming items are replaced at the supplier's cost.

Summary of the Evaluation Structure

Stage	Requirement	Assessment
Preliminary	MR1–MR12 mandatory documents	Pass / Fail
Technical – Part A	TA1–TA9 compliance with specifications, samples, delivery, warranty	Pass / Fail
Technical – Part B	TB1–TB4 capacity	100 marks (minimum 70)
Financial	Evaluated tender price	Lowest evaluated responsive tender

Annex A – Technical Compliance Sheet (to be filled by bidder)

Item	Description	Qty	Required specification	Offered specification	Complies (Yes/No)	Evidence (page no.)
1	Learner table – hexagonal	85	As TA1			
2	Learner chair – rectangular	510	As TA2			
3	Teacher's table	11	As TA3			
4	Teacher's chair	11	As TA4			
5	Swing set (installed)	11	As TA5			
6	Slide (installed)	11	As TA6			

Corrections Needed in the Specifications Before Advertising

- **Distribution list:** the “Students table” and “students chair” columns are swapped — each centre shows 30 tables and 5 chairs, but the totals (510 and 85) match 30 chairs and 5 tables per centre.
- **No dimensions for the furniture:** the learner/teacher tables and chairs have no height, seat or top sizes. Without them, bidders cannot be checked fairly on size. Add dimensions suitable for ECDE learners.
- **No dimensions for the slide:** add platform height, slide length and width, ladder and handrails.
- **Swing top beam “50 × 500 mm”** looks like a typo (posts are 50 × 50 mm); confirm the beam size.
- **Paint:** specify lead-free, non-toxic paint; “Green” is listed twice in the colours.
- **Chairs:** “Frame to top” should read “Frame to seat”; the joints list has two items numbered “iii”.
- **Typos:** “Hunched” → “Haunched”; “srews” → “screws”; “Lokable” → “Lockable”.
- **Fill in:** delivery period (TA8), warranty period (TA9), estimated value for TB2, and the tender security amount (MR5).

NOTE: PPRA CIRCULAR NO. 1/2024 OF 2024, BIDDERS WILL BE NEEDED TO PROVIDE FOR ALLOCATION 0.03% OF THE VALUE OF SIGNED CONTRACT EXCLUSIVE OF TAXEX THAT WILL BE FOR CAPACITY BUILDING LEVY.

SECTION IV - TENDERING FORMS

1. FORM OF TENDER

(Amended and issued pursuant to PPRA CIRCULAR No. 02/2022)

INSTRUCTIONS TO TENDERERS

i) All italicized text is to help the Tenderer in preparing this form.
ii) The Tenderer must prepare this Form of Tender on stationery with its letterhead clearly showing the Tenderer's complete name and business address. Tenderers are reminded that this is a mandatory requirement.
iii) Tenderer must complete and sign CERTIFICATE OF INDEPENDENT TENDER DETERMINATION and the SELF DECLARATION FORMS OF THE TENDERER as listed under (s) below.

Date of this Tender submission:.....*[insert date (as day, month and year) of Tender submission]* **Tender Name and Identification**:.....*[insert identification]* **Alternative No.**:.....*[insert identification No if this is a Tender for an alternative]*

To:..... *[Insert complete name of Procuring Entity]*

a) **No reservations:** We have examined and have no reservations to the Tendering document, including Addenda issued in accordance with ITT 8;
b) **Eligibility:** We meet the eligibility requirements and have no conflict of interest in accordance with ITT 4;
c) **Tender-Securing Declaration:** We have not been suspended nor declared ineligible by the Procuring Entity based on execution of a Tender Securing Declaration or Proposal-Securing Declaration in Kenya in accordance with ITT 4.7;
d) **Conformity**: We offer to provide design, supply and installation services in conformity with the Tendering document of the following: *[insert a brief description of the Plant, Design, Supply and Installation Services];*
e) **Tender Price:** The total price of our Tender, excluding any discounts offered in item (f) below is: *[Insert one of the options below as appropriate]*

Option1, in case of one lot: Total price is: *[insert the total price of the Tender in words and figures, indicating the various amounts and the respective currencies];*

Or Option 2, in case of multiple lots: (a) Total price of each lot [insert the total price of each lot in words and figures, indicating the various amounts and the respective currencies]; and (b) Total price of all lots (sum of all lots) *[insert the total price of all lots in words and figures, indicating the various amounts and the respective currencies];*

f) **Discounts:** The discounts offered and the methodology for their application are:
i) The discounts offered are: *[Specify in detail each discount offered.]*
ii) The exact method of calculations to determine the net price after application of discounts is shown below: *[Specify in detail the method that shall be used to apply the discounts];*

g) **Tender Validity Period:** Our Tender shall be valid for the period specified in TDS 19.1 (as amended if applicable) from the date fixed for the Tender submission deadline specified in TDS 23.1 (as amended if applicable), and it shall remain binding upon us and may be accepted at any time before the expiration of that period;
h) **Performance Security:** I four Tender is accepted; we commit to obtain a Performance Security in accordance

with the Tendering document;

i) **One Tender Per Tenderer:** We are not submitting any other Tender (s) as an individual Tenderer, and we are not participating in any other Tender (s) as a Joint Venture member, and meet the requirements of ITT 4.3, other than alternative Tenders submitted in accordance with ITT 13;

j) **Suspension and Debarment:** We, along with any of our subcontractors, suppliers, consultants, manufacturers, or service providers for any part of the contract, are not subject to, and not controlled by any entity or individual that is subject to, a temporary suspension. Further, we are not ineligible under the Kenya laws or official regulations or pursuant to a decision of the United Nations Security Council;

k) **State-owned enterprise or institution:** *[select the appropriate option and delete the other]* [We are not a state- owned enterprise or institution]/ [We are a state-owned enterprise or institution but meet the requirements of ITT 4.6];

l) **Commissions, gratuities and fees:** We have paid, or will pay the following commissions, gratuities, or fees with respect to the Tendering process or execution of the Contract: [insert complete name of each Recipient, its full address, the reason for which each commission or gratuity was paid and the amount and currency of each such commission or gratuity]

Name of Recipient	**Address**	**Reason**	**Amount**

(If none has been paid or is to be paid, indicate "none.")

m) Binding Contract: We understand that this Tender, together with your written acceptance thereof included in your Form of Acceptance, shall constitute a binding contract between us, until a formal contract is prepared and executed;

n) Not Bound to Accept: We understand that you are not bound to accept the lowest evaluated cost Tender, the Best Evaluated Tender or any other Tender that you may receive; and

o) Fraud and Corruption: We hereby certify that we have taken steps to ensure that no person acting for us or on our behalf engages in any type of Fraud and Corruption.

p) Collusive practices: We hereby certify and confirm that the tender is genuine, non-collusive and made with the intention of accepting the contract if awarded. To this effect we have signed the "Certificate of Independent tender Determination" attached below.

q) Code of Ethical Conduct: We undertake to adhere by the Code of Ethical Conduct for Persons Participating in Public Procurement and Asset Disposal Activities in Kenya, copy available from www.pppra.go.ke during the procurement process and the execution of any resulting contract.

r) **Beneficial Ownership Information:** We commit to provide to the procuring entity the Beneficial Ownership Information in conformity with the Beneficial Ownership Disclosure Form upon receipt of notification of intention to enter into a contract in the event we are the successful tenderer in this subject procurement proceeding.

s) We, the Tenderer, have duly completed, signed and stamped the following Forms as part of our Tender:

(i) Tenderer's Eligibility; Confidential Business Questionnaire – to establish we are not in any conflict to interest.

(ii) Certificate of Independent Tender Determination – to declare that we completed the tender without colluding with other tenderers.

(iii) Self-Declaration of the Tenderer – to declare that we will, if awarded a contract, not engage in any form of fraud and corruption.

(iv) declaration and commitment to the code of ethics for Persons Participating in Public Procurement and Asset Disposal Activities in Kenya,

t) Further, we confirm that we have read and understood the full content and scope of fraud and corruption as informed in **"Appendix 1- Fraud and Corruption**" attached to the Form of Tender.

Name of the Tenderer: *[*insert complete name of person signing the Tender*]

Name of the person duly authorized to sign the Tender on behalf of the Tenderer: **[*insert complete name of person duly authorized to sign the Tender*]

Title of the person signing the Tender: [*insert complete title of the person signing the Tender*]

Signature of the person named above: [*insert signature of person whose name and capacity are shown above*]

Date signed [*insert date of signing*] **day of** [*insert month*], [*insert year*].

TENDERER'S ELIGIBILITY - CONFIDENTIAL BUSINESS QUESTIONNAIRE

Instruction to Tenderer

Tender is instructed to complete the particulars required in this Form, one form for each entity if Tender is a JV. Tenderer is further reminded that it is an offence to give false information on this Form.

a) Tenderer's details

	ITEM	**DESCRIPTION**
1	Name of the Procuring Entity	
2	Reference Number of the Tender	
3	Date and Time of Tender Opening	
4	Name of the Tenderer	
5	Full Address and Contact Details of the Tenderer.	1. Country 2. City 3. Location 4. Building 5. Floor 6. Postal Address 7. Name and email of contact person.
6	Current Trade License Registration Number and Expiring date	
7	Name, country and full address (*postal and physical addresses, email, and telephone number*) of Registering Body/Agency	
8	Description of Nature of Business	
9	Maximum value of business which the Tenderer handles.	
10	State if Tenders Company is listed in stock exchange, give name and full address (*postal and physical addresses, email, and telephone number*) of state which stock exchange	

General and Specific Details

b) Sole Proprietor, provide the following details.

Name in full_____Age_____

Nationality_____Country of Origin_____

Citizenship_____

c) Partnership, provide the following details.

	Names of Partners	**Nationality**	**Citizenship**	**% Shares owned**

1				
2				
3				

d) Registered Company, provide the following details.

i) Private or public Company_____

ii) State the nominal and issued capital of the Company: -

Nominal Kenya Shillings (Equivalent)_____

Issued Kenya Shillings (Equivalent)_____

iii) Give details of Directors as follows.

	Names of Director	**Nationality**	**Citizenship**	**% Shares owned**
1				
2				
3				

e) DISCLOSURE OF INTEREST-Interest of the Firm in the Procuring Entity.

i) Are there any person/ persons in. ..... (Name of Procuring Entity)

who has/ have an interest or relationship in this firm?

Yes/No. .....If yes, provide details as follows.

	Names of Person	**Designation in the Procuring Entity**	**Interest or Relationship with Tenderer**
1			
2			
3			

ii) Conflict of interest disclosure

	Type of Conflict	**Disclosure YES OR NO**	**If YES provide details of the relationship with Tenderer**
1	Tenderer is directly or indirectly controls, is controlled by or is under common control with another tenderer.		
2	Tenderer receives or has received any direct or indirect subsidy from another tenderer.		
3	Tenderer has the same legal representative as another tenderer		

	Type of Conflict	Disclosure YES OR NO	If YES provide details of the relationship with Tenderer
4	Tender has a relationship with another tenderer, directly or through common third parties, that puts it in a position to influence the tender of another tenderer, or influence the decisions of the Procuring Entity regarding this tendering process.		
5	Any of the Tenderer's affiliates participated as a consultant in the preparation of the design or technical specifications of the works that are the subject of the tender.		
6	Tenderer would be providing goods, works, non-consulting services or consulting services during implementation of the contract specified in this Tender Document.		
7	Tenderer has a close business or family relationship with a professional staff of the Procuring Entity who are directly or indirectly involved in the preparation of the Tender document or specifications of the Contract, and/or the Tender evaluation process of such contract.		
8	Tenderer has a close business or family relationship with a professional staff of the Procuring Entity who would be involved in the implementation or supervision of the such Contract.		
9	Has the conflict stemming from such relationship stated in item 7 and 8 above been resolved in a manner acceptable to the Procuring Entity throughout the tendering process and execution of the Contract.		

f) *Certification*

On behalf of the Tenderer, I certify that the information given above is complete, current and accurate as at the date of submission.

Full Name_____

Title or Designation_____

_____ _____

(Signature) (Date)

CERTIFICATE OF INDEPENDENT TENDER DETERMINATION

I, the under signed, in submitting the accompanying Letter of Tender to the_____*[Name of Procuring Entity]* for:_____*[Name and number of tender]* in response to the request for tenders made by:_____*[Name of Tenderer]* do here by make the following statements that I certify to be true and complete in every respect:

I certify, on behalf of_____*[Name of Tenderer]* that:

1. I have read and I understand the contents of this Certificate;
2. I understand that the Tender will be disqualified if this Certificate is found not to be true and complete in every respect;

3. I am the authorized representative of the Tenderer with authority to sign this Certificate, and to submit the Tender on behalf of the Tenderer;

4. For the purposes of this Certificate and the Tender, I understand that the word "competitor" shall include any individual or organization, other than the Tenderer, whether or not affiliated with the Tenderer, who:
   a) Has been requested to submit a Tender in response to this request for tenders;
   b) could potentially submit a tender in response to this request for tenders, based on their qualifications, abilities or experience;

5. The Tenderer discloses that [check one of the following, as applicable]:
   a) The Tenderer has arrived at the Tender independently from, and without consultation, communication, agreement or arrangement with, any competitor;
   b) The Tenderer has entered into consultations, communications, agreements or arrangements with one or more competitors regarding this request for tenders, and the Tenderer discloses, in the attached document(s), complete details thereof, including the names of the competitors and the nature of, and reasons for, such consultations, communications, agreements or arrangements;
6. In particular, without limiting the generality of paragraphs (5) (a) or (5) (b) above, there has been no consultation, communication, agreement or arrangement with any competitor regarding:
   a) prices;
   b) methods, factors or formulas used to calculate prices;
   c) the intention or decision to submit, or not to submit, a tender; or
   d) the submission of a tender which does not meet the specifications of the request for Tenders; except as specifically disclosed pursuant to paragraph (5) (b) above;
7. In addition, there has been no consultation, communication, agreement or arrangement with any competitor regarding the quality, quantity, specifications or delivery particulars of the works or services to which this request for tenders relates, except as specifically authorized by the procuring authority or as specifically disclosed pursuant to paragraph (5) (b) above;
8. The terms of the Tender have not been, and will not be, knowingly disclosed by the Tenderer, directly or indirectly, to any competitor, prior to the date and time of the official tender opening, or of the awarding of the Contract, whichever comes first, unless otherwise required by law or as specifically disclosed pursuant to paragraph (5) (b) above.

Name_____

Title_____

Date

_____

[Name, title and signature of authorized agent of Tenderer and Date]

SELF DECLARATION FORMS

FORM SD1

SELF DECLARATION THAT THE PERSON /TENDERER IS NOT DEBARRED IN THE MATTER OF THE PUBLIC PROCUREMENT AND ASSET DISPOSAL ACT 2015.

I, ……., of Post Office Box.....being a resident of

…….. in the Republic of..... do hereby make a statement as follows: -

1. THAT I am the Company Secretary/ Chief Executive/ Managing Director/ Principal Officer/ Director of …..... *(insert name of the Company)* who is a Bidder in respect of Tender No. …….. for ……. (*insert tender title/description)* for .....*(insert name of the Procuring entity)* and duly authorized and competent to make this statement.

2. THAT the afore said Bidder, its Directors and subcontractors have not been debarred from participating in procurement proceeding under Part IV of the Act.

3. THAT what is deponed to here in above is true to the best of my knowledge, information and belief.

…… …… ……
(Title) (Signature) (Date)

Bidder's Official Stamp

FORM SD2

SELF DECLARATION THAT THE PERSON/TENDERER WILL NOT ENGAGE IN ANY CORRUPT OR FRAUDULENT PRACTICE.

I, ...of P. O. Box.....being a resident of .....in the Republic of..... do hereby make a statement as follows: -

1. THAT I am the Chief Executive/ Managing Director/ Principal Officer/ Director of……..... … .....*(insert name of the Company)* who is a Bidder in respect of Tender No. …….. for ……. *(insert tender title/description)* for.....*(insert name of the Procuring entity)* and duly authorized and competent to make this statement.

2. THAT the afore said Bidder, its servants and/ or agents/ subcontractors will not engage in any corrupt or fraudulent practice and has not been requested to pay any inducement to any member of the Board, Management, Staff and/or employees and/or agents of ……. *(insert name of the Procuring entity)* which is the procuring entity.

3. THAT the aforesaid Bidder, its servants and/ or agents/ subcontractor shave not offered any inducement to any member of the Board, Management, Staff and/ or employees and/ or agents of … .....(name of the procuring entity).

4. THAT the aforesaid Bidder will not engage/ has not engaged in any corrosive practice with other bidders participating in the subject tender.

5. THAT what is deponed to here in above is true to the best of my knowledge information and belief.

…… …… ……
(Title) (Signature) (Date)

Bidder's Official Stamp

DECLARATION AND COMMITMENT TO THE CODE OF ETHICS

I, ...*(person)* on behalf of

(Name of the Business/ Company/ Firm) ..... declare that I have read and fully understood the contents of the Public Procurement & Asset Disposal Act, 2015, Regulations and the Code of Ethics for persons participating in Public Procurement and Asset Disposal and my responsibilities under the Code.

I do hereby commit to abide by the provisions of the Code of Ethics for persons participating in Public Procurement and Asset Disposal.

Name of Authorized signatory.....

Sign.....

Position.....

Office address.....Telephone.....

E-mail.....

Name of the Firm/Company.....

Date.....

(Company Seal/ Rubber Stamp where applicable)

Witness

Name.....

Sign.....

Date.....

SCHEDULE OF RATES AND PRICES

Schedule No. 1. Plant and Mandatory Spare Parts Supplied from Abroad

Item	**Description**	**Code** [1]		**Qty.**		**Unit Price**[2]		**Total Price**[2]
							CIP	
				(1)		*(2)*	*(3)*	*(1) x (3)*
	TOTAL (to Schedule No. 5. Grand Summary)							

Item	Description	Code	Country

Schedule No. 2. Plant and Mandatory Spare Parts Supplied from Within Kenya

Item	Description	Qty.	EXW Unit Price[1]	EXW Total Price[1]
		(1)	*(2)*	*(1) x (2)*
TOTAL (to Schedule No. 5. Grand Summary)				

Name of Tender_____

Signature _____

[1] Specify currency in accordance with ITT 18

Schedule No. 3. Design Services

Item	Description	Qty.	Unit Price[1]		Total Price[1]
			Local Currency Portion	Foreign Currency Portion	
		(1)	*(2)*	*(optional)*	*(1) x (2)*

Name of Tenderer _____Signature _____

Schedule No. 4. Installation and Other Services

Item	**Description**	**Qty.**	**Unit Price**[1]		**Total Price**[1]	
			Foreign Currency Portion	**Local Currency Portion**	**Foreign**	**Local**
		(1)	*(2)*	*(3)*	*(1) x (2)*	*(1) x (3)*
TOTAL (to Schedule No. 5. Grand Summary)						

Name of Tenderer_____Signature _____

[1] Specify currency in accordance with ITT 18

Schedule No. 5. Grand Summary

Item	**Description**	**Total Price**[1]	
		Foreign	**Local**
	Total Schedule No. 1. Plant, and Mandatory Spare Parts Supplied from Abroad		
	Total Schedule No. 2. Plant, and Mandatory Spare Parts Supplied from Within Kenya		
	Total Schedule No. 3. Design Services		
	Total Schedule No. 4. Installation and Other Services		
TOTAL (to Tender Form)			

Name of Tenderer_____Signature _____

[1]Specify currency in accordance with ITT 18. Create and use as many columns for Foreign Currency requirement as there are foreign currencies

Item	Description	Qty.	Unit Price		Total Price
			CIF or CIP **(foreign parts)**	**EXW** **(local parts)**	
		(1)	*(2)*	*(3)*	*(1) x (2) or (3)*

Name of Tenderer_____Signature _____

Price Adjustment

Where the Contract Period (excluding the Defects Liability Period) exceeds eighteen (18) months, it is normal procedure that prices payable to the Contractor shall be subject to adjustment during the performance of the Contract to reflect changes occurring in the cost of labor and material components. In such cases the Tendering document shall include in this form a formula of the following general type, pursuant to SCC Sub-Clause11.2.

Where Contracts are of a shorter duration than eighteen (18) months or in cases where there is to be no Price Adjustment, the following provision shall not be included. Instead, it shall be indicated under this form that the prices are to remain firm and fixed for the duration of the Contract.

[1] *Specify currency in accordance with ITT 18. Create and use as many columns for Foreign Currency requirement as there are foreign currencies*

Sample Price Adjustment Formula

If in accordance with GCC 11.2, prices shall be adjustable, the following method shall be used to calculate the price adjustment:

Prices payable to the Contractor, in accordance with the Contract, shall be subject to adjustment during performance of the Contract to reflect changes in the cost of labor and material components, in accordance with the following formula:

$$P1 \square P0 \square (a \square b \frac{L1}{L0} \square c \frac{M1}{M0}) \square P0$$

P_1 = adjustment amount payable to the Contractor

P_0 = Contract price (base price)

a = percentage of fixed element in Contract price (a=%)

b = percentage of labor component in Contract price (b=%)

c = percentage of material and equipment component in Contract price (c=%)

L_0,L_1 = labor indices applicable to the appropriate industry in the country of origin on the base date and the date For adjustment, respectively

M_0,M_1 = material and equipment indices in the country of origin on the base date and the date for adjustment, respectively

N.B. a+b+c= 100%.

Conditions Applicable to Price Adjustment

The Tenderer shall indicate the source of labor, source of exchange rate and materials indices and the base date indices in its Tender.

Item Source of Indices Used Base Date Indices.

The base date shall be the date thirty (30) days prior to the Tender closing date.

The date of adjustment shall be the mid-point of the period of manufacture or installation of component or Plant. The following conditions shall apply:

(a) No price increase will be allowed beyond the original delivery date unless covered by an extension of time awarded by the Procuring Entity under the terms of the Contract. No price increase will be allowed for periods of delay for which the Contractor is responsible. The Procuring Entity will, however, be entitled to any price decrease occurring during such periods of delay.

(b) If the currency in which the Contract price, P0, is expressed is different from the currency of the country of origin of the labor and/or materials indices, a correction factor will be applied to avoid incorrect adjustments of the Contract price. The correction factor shall be: Z0/Z1, where,
Z_0=the number of units of currency of the origin of the indices which equal to one unit of the currency of the Contract Price P_0 on the Base date, and

Z_1=the number of units of currency of the origin of the indices which equal to one unit of the currency of the Contract Price P_0 on the Date of Adjustment.

(c) No price adjustment shall be payable on the portion of the Contract price paid to the Contractor as an advance payment.

TECHNICAL PROPOSAL

- Site Organization
- Method Statement
- Mobilization Schedule
- Construction Schedule
- Plant
- Contractor's Equipment
- Personnel
- Proposed Subcontractors for Major Items of Plant and Installation Services
- Others

SITE ORGANIZATION

METHOD STATEMENT

MOBILIZATION SCHEDULE

CONSTRUCTION SCHEDULE

Contractor's Equipment Form

EQU

The Tenderer shall provide adequate information to demonstrate clearly that it has the capability to meet the requirements for the key Contractor's equipment listed in Section III, Evaluation and Qualification Criteria. A separate Form shall be prepared for each item of equipment listed, or for alternative equipment proposed by the Tenderer.

Item of equipment		
Equipment information	Name of manufacturer	Model and power rating
	Capacity	Year of manufacture
Current status	Current location	
	Details of current commitments	
Source	Indicate source of the equipment ☐ Owned ☐ Rented ☐ Leased ☐ Specially manufactured	

Omit the following information for equipment owned by the

Owner	Name of owner	
	Address of owner	
	Telephone	Contact name and title
	Fax	Telex
Agreements	Details of rental / lease / manufacture agreements specific to the project	

Functional Guarantees

The Tenderer shall copy in the left column of the table below, the identification of each functional guarantee required in the Specification and stated by the Procuring Entity in para.1.2 (c) of Section III, Evaluation and Qualification

Criteria, and in the right column, provide the corresponding value for each functional guarantee of the proposed plant and equipment.

Required Functional Guarantee	Value of Functional Guarantee of the Proposed Plant and Equipment
1.	
2.	
3.	
…	

Personnel

Form PER -1- Proposed Personnel

Tenderers should provide the names of suitably qualified personnel to meet the specified requirements stated in Section III. The data on their experience should be supplied using the Form below for each candidate.

1.	**Title of position***
	Name
2.	**Title of position***
	Name
3.	**Title of position***
	Name
4.	**Title of position***
	Name

*As listed in Section III.

Form PER-2

Resume of Proposed Personnel

Name of Tenderer_____

Position		
Personnel information	**Name**	**Date of birth**
	Professional qualifications	
Present employment	**Name of Procuring Entity**	
	Address of Procuring Entity	
	Telephone	**Contact (manager / personnel officer)**

	Fax	**E-mail**
	Job title	**Years with present Procuring Entity**

Summarize professional experience over the last 20 years, in reverse chronological order. Indicate particular technical and managerial experience relevant to the project.

From	**To**	**Company / Project / Position / Relevant technical and management experience**

Proposed Subcontractors for Major Items of Plant and Installation Services

A list of major items of Plant and Installation Services is provided below.

The following Subcontractors and/or manufacturers are proposed for carrying out the item of the facilities indicated. Tenderers are free to propose more than one for each item

Major Items of Plant and Installation Services	**Proposed Subcontractors/Manufacturers**	**Nationality**

Others - Time Schedule

(to be used by Tenderer when alternative Time for Completion is invited in ITT 13.2)

Tenderers Qualification without prequalification

To establish its qualifications to perform the contract in accordance with Section III, Evaluation and Qualification Criteria the Tenderer shall provide the information requested in the corresponding Information Sheets included here under.

Form ELI 1.1

Tenderer Information Sheet

Date: _____

ITT No.: _____

1. Tenderer's Legal Name
2. In case of JV, legal name of each party:
3. Tenderer's actual or intended Country of Registration:
4. Tenderer's Year of Registration:
5. Tenderer's Legal Address in Country of Registration:
6. Tenderer's Authorized Representative Information Name: Address: Telephone/Fax numbers: Email Address:
7. Attached are copies of original documents of: Articles of Incorporation or Registration of firm named in 1, above, in accordance with ITT 4.1 and ITT 4.4. In case of JV, Form of intent to form JV including a draft agreement, or JV agreement, in accordance with ITT 4.1 and ITT 11.2. In case of state-owned enterprise or institution from Kenya, documents establishing legal and financial autonomy and compliance with the principles of commercial law, and is not under the supervision of the Procuring Entity in accordance with ITT 4.6.

Please note that a written authorization needs to be attached to this sheet as required by ITT

1. Tenderer's Legal Name:
2. JV's Party legal name:
3. JV's Party Country of Registration:
4. JV's Party Year of Registration:
5. JV's Party Legal Address in Country of Registration:
6. JV's Party Authorized Representative Information Name: Address: Telephone/Fax numbers: Email Address:
7. Attached are copies of original documents of: Articles of Incorporation or Registration of firm named in 1, above, in accordance with ITT 4.1 and ITT 4.4. In case of state-owned enterprise or institution from Kenya, documents establishing legal and financial autonomy and compliance with the principles of commercial law and is not under the supervision of the Procuring Entity, in accordance with ITT 4.6.

Form CON – 2

Historical Contract Non-Performance

Tenderer's Legal Name: _____

Date: _____

JV Member Legal Name: _____

ITT No.: _____

Non-Performed Contracts in accordance with Section III, Evaluation and Qualification Criteria			
☐ Contract non-performance did not occur since 1st January *[insert year]* specified in Section III, Evaluation and Qualification Criteria, Sub-Factor 2.1. ☐ Contract(s) not performed since 1st January *[insert year]* specified in Section III, Evaluation and Qualification Criteria, requirement 2.1			
Year	**Non- performed portion of contract**	**Contract Identification**	**Total Contract Amount (current value, currency, exchange rate and K Shilling equivalent)**
[insert year]	*[insert amount and percentage]*	Contract Identification: *[indicate complete contract name/ number, and any other identification]* Name of Procuring Entity: *[insert full name]* Address of Procuring Entity: *[insert City/ street/building/floor number/room number/country]* Reason(s) for nonperformance: *[indicate main reason(s)]*	*[insert amount]*
Pending Litigation, in accordance with Section III, Evaluation and Qualification Criteria			
☐ No pending litigation in accordance with Section III, Evaluation and Qualification Criteria, Sub-Factor 2.3. ☐ Pending litigation in accordance with Section III, Evaluation and Qualification Criteria, Sub-Factor 2.3 as indicated below.			

Year of dispute	**Amount in dispute (currency)**	**Contract Identification**	**Total Contract Amount (currency), K Shilling Equivalent (exchange rate)**
		Contract Identification: _____ Name of Procuring Entity: _____ Address of Procuring Entity: _____ Matter in dispute: _____ Party who initiated the dispute: Status of dispute: _____	

Year of dispute	Amount in dispute (currency)	Contract Identification	Total Contract Amount (currency), K Shilling Equivalent (exchange rate)
		Contract Identification: Name of Procuring Entity: Address of Procuring Entity: Matter in dispute: Party who initiated the dispute: Status of dispute:	
Litigation History in accordance with Section III, Evaluation and Qualification Criteria			
☐ No Litigation History in accordance with Section III, Evaluation and Qualification Criteria, Sub-Factor 2.4. ☐ Litigation History in accordance with Section III, Evaluation and Qualification Criteria, Sub-Factor 2.4 as indicated below.			
[insert year]	*[insert percentage]*	Contract Identification: [indicate complete contract name, number, and any other identification] Name of Procuring Entity: *[insert full name]* Address of Procuring Entity: *[insert City/ street/building/floor number/room number/country]* Matter in dispute: *[indicate main issues in dispute]* Party who initiated the dispute: *[indicate "Procuring Entity" or "Contractor"]* Reason(s) for Litigation and award decision *[indicate main reason(s)]*	*[insert amount]*

Form CCC

Current Contract Commitments / Works in Progress

Tenderers and each member to a JV should provide information on their current commitments on all contracts that have been awarded, or for which a Form of intent or acceptance has been received, or for contracts approaching completion, but for which an unqualified, full completion certificate has yet to be issued.

Name of contract	**Procuring Entity, contact address/tel**	**Value of outstanding work (current K Shilling equivalent)**	**Estimated completion date**	**Average monthly invoicing over last six months (K Shilling /month)**
1.				
2.				
3.				
4.				
5.				
etc.				

Form FIN – 3.1

Financial Situation

Historical Financial Performance

Tenderer's Legal Name: _____ Date: _____

JV Member Legal Name: _____ ITT No.: _____

To be completed by the Tenderer and, if JV, by each member

Financial information in KShilling equivalent	**Historic information for previous _____(__) years** *(KShilling equivalent in 000s)*						
	Year 1	**Year 2**	**Year 3**	**Year …**	**Year n**	**Avg.**	**Avg. Ratio**
Information from Balance Sheet							
Total Assets (TA)							
Total Liabilities (TL)							
Net Worth (NW)							
Current Assets (CA)							
Current Liabilities (CL)							
Information from Income Statement							
Total Revenue (TR)							
Profits Before Taxes (PBT)							

Attached are copies of financial statements (balance sheets, including all related notes, and income statements) for the years required above complying with the following conditions:

a) Must reflect the financial situation of the Tenderer or member to a JV, and not sister or parent companies.
b) Historic financial statements must be audited by a certified accountant.
c) Historic financial statements must be complete, including all notes to the financial statements.
d) Historic financial statements must correspond to accounting periods already completed and audited (no statements for partial periods shall be requested or accepted).

Form FIN - 3.2

Average Annual Turnover

Tenderer's Legal Name:_____ Date: _____

JV Member Legal Name:_____ ITT No.: _____

Annual turnover data		
Year	**Amount and Currency**	**KSHILLING equivalent**
	_____	_____
	_____	_____
	_____	_____
	_____	_____
	_____	_____
*Average Annual Turnover	_____	_____

*Average annual turnover calculated as total certified payments received for work in progress or completed, divided by the number of years specified in Section III, Evaluation Criteria, Sub-Factor 2.3.2.

Form FIN3.3

Financial Resources

Specify proposed sources of financing, such as liquid assets, unencumbered real assets, lines of credit, and other financial means, net of current commitments, available to meet the total cash flow demands of the subject contractor contracts as indicated in Section III, Evaluation and Qualification Criteria.

Source of financing	**Amount (KShilling equivalent)**
1.	

2.	
3.	
4.	

Form EXP 4.1

General Experience

Tenderer's Legal Name: _____

JV Member Legal Name: _____

ITT No.: _____

Date: _____

Starting Month / Year	**Ending Month / Year**	**Years***	**Contract Identification**	**Role of Tenderer**
_____	_____		Contract name: Brief Description of the Works performed by the Tenderer: Name of Procuring Entity: Address:	_____
_____	_____		Contract name: Brief Description of the Works performed by the Tenderer: Name of Procuring Entity: Address:	_____
_____	_____		Contract name: Brief Description of the Works performed by the Tenderer: Name of Procuring Entity: Address:	_____
_____	_____		Contract name: Brief Description of the Works performed by the Tenderer: Name of Procuring Entity: Address:	_____
_____	_____		Contract name: Brief Description of the Works performed by the Tenderer: Name of Procuring Entity: Address:	_____

Starting Month / Year	Ending Month / Year	Years*	Contract Identification	Role of Tenderer
_____	_____		Contract name: Brief Description of the Works performed by the Tenderer: Name of Procuring Entity: Address:	_____

*List calendar year for years with contracts with at least nine (9) months activity per year starting with the earliest year

Form EXP –4.2(a)

Specific Experience

Tenderer's Legal Name: _____

JV Member Legal Name: _____

Similar Contract No. __[insert specific number] of [total number of contracts] ___required	Information
Description of the similarity in accordance with Sub-Factor 4.2a) of Section III:	
Amount	_____ __
Physical size	_____ __
Complexity	_____ __
Methods/Technology	_____ __
Physical Production Rate	_____ __

Form EXP –4.2(b)

Specific Experience in Key Activities

Tenderer's Legal Name: _____ Date: _____

JV Member Legal Name: _____ ITT No.: _____

Subcontractor's Legal Name: _____

	Information		
Contract Identification	_____		
Award date Completion date	_____ _____		
Role in Contract	□ Contractor	□ Management Contractor	□Subcontractor
Total contract amount	_____		KSHILLING _____
If member in a JV or subcontractor, specify participation of total contract amount	_____%	_____	KSHILLING _____
Procuring Entity's Name:	_____		
Address: Telephone/fax number: E-mail:	_____ _____ _____ _____		

FORM OF TENDER SECURITY-[Option 1–Demand Bank Guarantee]

Beneficiary:_____

Request forTenders No:

_____

Date:_____

TENDER GUARANTEE No.:_____

Guarantor: _____

1. We have been informed that_____(here inafter called "the Applicant") has submitted or will submit to the Beneficiary its Tender (here inafter called" the Tender") for the execution of_____ under Request for Tenders No._____("the ITT").

2. Furthermore, we understand that, according to the Beneficiary's conditions, Tenders must be supported by a Tender guarantee.

3. At the request of the Applicant, we, as Guarantor, hereby irrevocably undertake to pay the Beneficiary any sum or sums not exceeding in total an amount of_____(_____) upon receipt by us of the Beneficiary's complying demand, supported by the Beneficiary's statement, whether in the demand itself or a separate signed document accompanying or identifying the demand, stating that either the Applicant:

(a) has withdrawn its Tender during the period of Tender validity set forth in the Applicant's Letter of Tender ("the Tender Validity Period"), or any extension thereto provided by the Applicant; or

b) having been notified of the acceptance of its Tender by the Beneficiary during the Tender Validity Period or any extension there to provided by the Applicant, (i) has failed to execute the contract agreement, or (ii) has failed to furnish the Performance.

4. This guarantee will expire: (a) if the Applicant is the successful Tenderer, upon our receipt of copies of the contract agreement signed by the Applicant and the Performance Security and, or (b) if the Applicant is not the successful Tenderer, upon the earlier of (i) our receipt of a copy of the Beneficiary's notification to the Applicant of the results of the Tendering process; or (ii) thirty days after the end of the Tender Validity Period.

5. Consequently, any demand for payment under this guarantee must be received by us at the office indicated above onor before that date.

_____

[signature(s)]

Note: All italicized text is for use in preparing this form and shall be deleted from the final product.

TENDER GUARANTEE No.: _____

1. Whereas …… [*Name of the tenderer]* (hereinafter called "the tenderer") has submitted its tender dated …… [*Date of submission of tender]* for the ..... *[Name and/or description of the tender]* (hereinafter called "the Tender") for the execution of _____ under Request for Tenders No. _____ ("the ITT").

2. KNOW ALL PEOPLE by these presents that WE …… of ..... [**Name of Insurance Company**] having our registered office at …… (hereinafter called "the Guarantor"), are bound unto …….. [*Name of Procuring Entity*] (hereinafter called "the Procuring Entity") in the sum of …… (Currency and guarantee amount) for which payment well and truly to be made to the said Procuring Entity, the Guarantor binds itself, its successors and assigns, jointly and severally, firmly by these presents.

Sealed with the Common Seal of the said Guarantor this ___day of _____20 __.

3. NOW, THEREFORE, THE CONDITION OF THIS OBLIGATION is such that if the Applicant:

   a) has withdrawn its Tender during the period of Tender validity set forth in the Principal's Letter of Tender ("the Tender Validity Period"), or any extension thereto provided by the Principal; or

   b) having been notified of the acceptance of its Tender by the Procuring Entity during the Tender Validity Period or any extension thereto provided by the Principal; (i) failed to execute the Contract agreement; or (ii) has failed to furnish the Performance Security, in accordance with the Instructions to tenderers ("ITT") of the Procuring Entity's Tendering document.

   then the guarantee undertakes to immediately pay to the Procuring Entity up to the above amount upon receipt of the Procuring Entity's first written demand, without the Procuring Entity having to substantiate its demand, provided that in its demand the Procuring Entity shall state that the demand arises from the occurrence of any of the above events, specifying which event(s) has occurred.

4. This guarantee will expire: (a) if the Applicant is the successful Tenderer, upon our receipt of copies of the contract agreement signed by the Applicant and the Performance Security and, or (b) if the Applicant is not the successful Tenderer, upon the earlier of (i) our receipt of a copy of the Beneficiary's notification to the Applicant of the results of the Tendering process; or (ii)twenty-eight days after the end of the Tender Validity Period.
5. Consequently, any demand for payment under this guarantee must be received by us at the office indicated above on or before that date.

_____	_____
[Date]	*[Signature of the Guarantor]*
_____	_____
[Witness]	*[Seal]*

Note: All italicized text is for use in preparing this form and shall be deleted from the final product.

[The Bidder shall complete this Form in accordance with the instructions indicated]

Date:_____*[insert date (as day, month and year) of Tender*

Submission] Tender No.:_____*[insert number of tendering process]*

To:_____*[insert complete name of*

Purchaser] I/We, the under signed, declare that:

1. I/We understand that, according to your conditions, bids must be supported by a Tender-Securing Declaration.
2. I/We accept that I/ we will automatically be suspended from being eligible for tendering in any contract with the Purchaser for the period of time of [insert number of months or years] starting on [insert date], if we are in breach of our obligation (s) under the bid conditions, because we–(a) have withdrawn our tender during the period of tender validity specified by us in the Tendering Data Sheet; or (b) having been notified of the acceptance of our Bid by the Purchaser during the period of bid validity, (i) fail or refuse to execute the Contract, if required, or (ii) fail or refuse to furnish the Performance Security, in accordance with the instructions to tenders.
3. I/ We understand that this Tender Securing Declaration shall expire if we are not the successful Tenderer (s), upon the earlier of:
   a) Our receipt of a copy of your notification of the name of the successful Tenderer; or
   b) Thirty days after the expiration of our Tender.
4. I/ We understand that if I am/ we are/ in a Joint Venture, the Tender Securing Declaration must be in the name of the Joint Venture that submits the bid, and the Joint Venture has not been legally constituted at the time of bidding, the Tender Securing Declaration shall be in the names of all future partners as named in the letter of intent.

Signed: .....

Capacity/title (director or partner or sole proprietor, etc.)

. .....Name:

.....

Duly authorized to sign the bid for and on behalf of.....*[insert complete name of Tenderer]*

Dated on.....day of .....*[Insert date of signing]*

Seal or stamp

MANUFACTURER'S AUTHORIZATION FORM

Date:_____

ITT No.:_____

To: _____

WHEREAS

We_____, who are official manufacturers of_____, having factories at

_____, do hereby authorize_____to submit a Tender the purpose of which is to provide the following goods, manufactured by us_____, and to subsequently negotiate and sign the Contract.

We hereby extend our full guarantee and warranty in accordance with Clause 27 of the General Conditions, with respect to the goods offered by the above firm.

Signed:_____

Name:_____

Title:_____

Duly authorized to sign this Authorization on behalf of:_____

Dated on_____day of_____,_____

COUNTY GOVERNMENT OF LAIKIPIA
DEPARTMENT OF EDUCATION, VOCATIONAL TRAINING AND LIBRARY SERVICES
P.O. BOX 46-20321
RUMURUTI

ECDE FURNITURE SPECIFICATIONS FY 2026/27

Sno.	Item	Specification	Quantity	Cost @unit Kshs	Total Cost
1	Table	**Design ;**Hexagonal **Material** ; Solid Timber -Good quality Cypress free from and insect deformity attack& well seasoned Joints ; i.Top Tongue and groove ii. Legs to rails Hunched mortise and tenon secured with woodglue and dowels iii. Frame to top ;wood screw from below Finish ;Sanded to smooth finish Paint ; blue, Green Yellow,Green ,white Rounded corners ; No protruding srews	85		
	Chair	**Design ;**Rectangular **Material** ; Solid Timber -Good quality Cypress free from and insect deformity attack& well seasoned Joints ; i.Seat ;Tongue and groove ii. Legs to rails Hunched mortise and tenon secured with woodglue	510		

		and dowels iii. Frame to top ;wood screw from below iii.Back to frame Mortice and tenon Finish ;Sanded to smooth finish Paint ; blue, Green Yellow,Green ,white Rounded corners ; No protruding srews			
	Teacher s table	**Design ;**Rectangular **Material** ; Solid Timber -Good quality Cypress free from and insect deformity attack& well seasoned Joints ; i.Top Tongue and groove ii. Legs to rails Hunched mortise and tenon secured with woodglue and dowels iii. Frame to top ;wood screw from below Drawers Opens outward through smooth sliding Lokable Knob to open and close Finish ;Sanded to smooth finish Paint ; blue, Green Yellow,Green ,white Rounded corners ; No protruding srews	11		
	Teacher s Chair	**Design ;**Rectangular **Material** ; Solid Timber -Good quality Cypress free from and insect deformity attack& well seasoned	11		

		Joints ; i.Seat ;Tongue and groove ii. Legs to rails Hunched mortise and tenon secured with woodglue and dowels iii. Frame to top ;wood screw from below iii.Back to frame Mortice and tenon Finish ;Sanded to smooth finish Paint ; blue, Green Yellow,Green ,white Rounded corners ; No protruding srews			
	ECDE Swing set	***Construction installation and Testing*** Material Frame ; Galvanised steel **Seat Spacing** Distance between seats (centre to centre): **600 mm** Clearance from frame to seat edge: **350 mm minimum** **FOUNDATION & ANCHORAGE** **Concrete Footings** Footing size: **450 mm × 450 mm × 450 mm** Concrete mix: 1:2:4 **SAFETY & ECDE COMPLIANCE NOTES** Maximum fall height: **≤ 1.5 m** No sharp edges or protruding bolts	11		

		Chains fitted with finger-trap guards Minimum safety zone: **1.5 m clear space** all around Designed load per seat: **50 kg**			
	ECDE Slide	***Construction installation and Testing*** Material Frame ; Galvanised steel Sliding surface ; Smooth GI Sheet Gauge 16 (1.6mm) **FASTENERS & FITTINGS** Bolts: Galvanized **M12 × 150 mm** Nuts & washers: Galvanized, spring washers included All bolt ends capped or recessed (child safety) GI sheet riveted with safety standards to metal frame **FOUNDATION & ANCHORAGE** **Concrete Footings** Footing size: **450 mm × 450 mm × 450 mm** Concrete mix: 1:2:4	11		

CORRESPONDING WOODEN CHAIR TECHNICAL SPECIFICATIONS

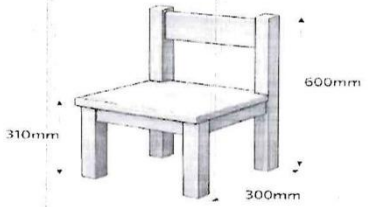

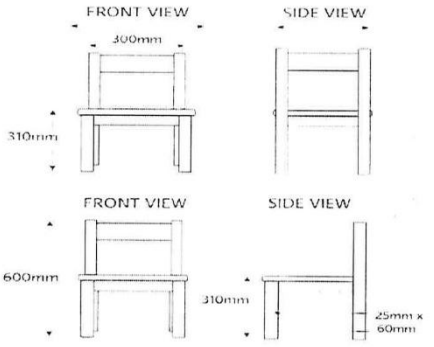

- Seat Width: 300mm
- Seat Depth: 300mm
- Seat Height: 310mm
- Height: 600mm
- Solid Timber Construction
- Legs: 45mm x 45mm
- Rails: 25mm x 60mm

HEXAGONAL ECDE TABLE TECHNICAL SPECIFICATIONS

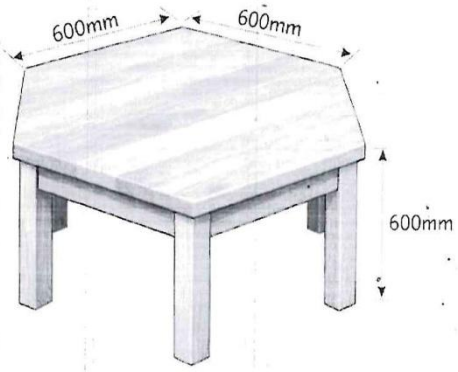

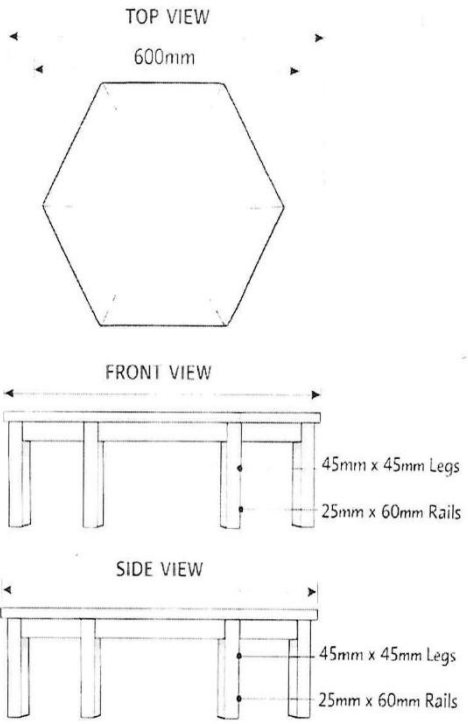

- 600mm Side Length
- Height: 600mm
- Solid Timber Construction
- Legs: 45mm x 45mm
- Rails: 25mm x 60mm

ECDE Teacher's Desk – SOLID TIMBER



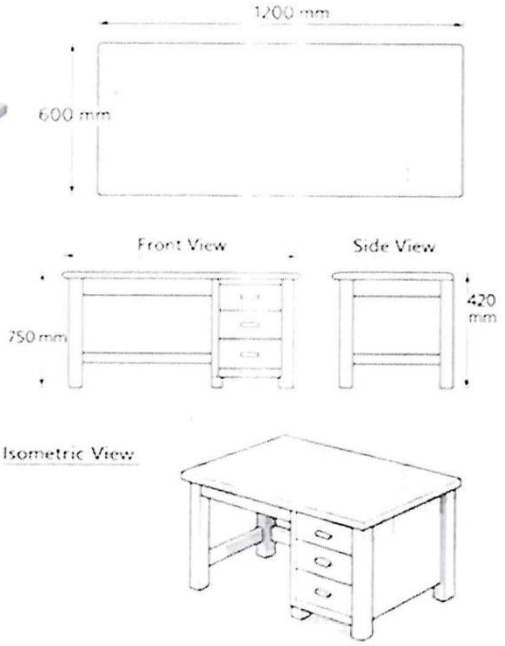

ECDE Teacher's Chair – SOLID TIMBER



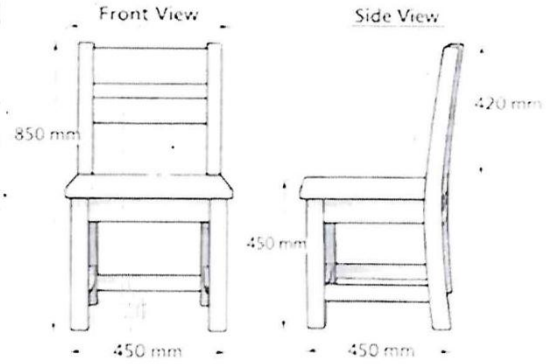

ECDE Slide

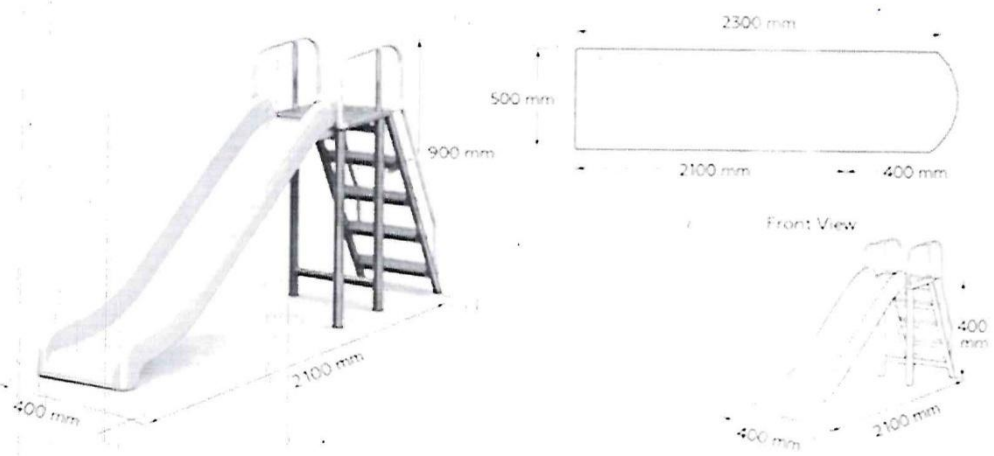

ECDE Slide

ECDE Swing Set

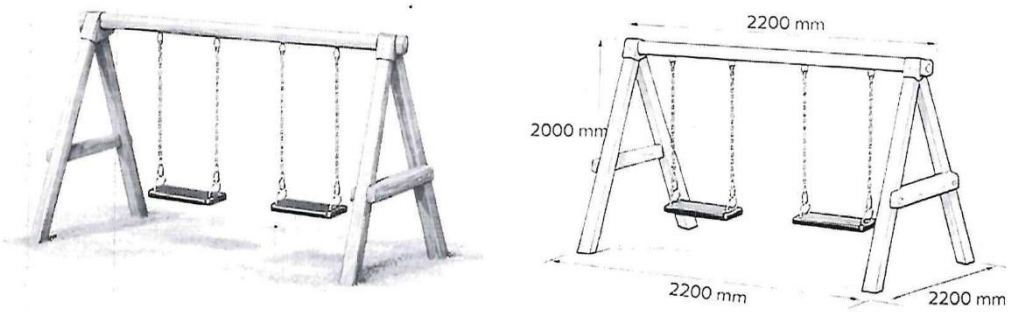

Component	Size / Dimension
Overall Height	2,000 mm
Overall Length	2,200 mm
Post Size	50× 50 mm
Top Beam	50× 500 mm
Seat Height	350–400 mm
Chain Diameter	6 mm
Seat Size	450 × 180 mm

DISTRIBUTION LIST

	ECDE EQUIPPING		Students table	students chair	teachers chairs	teachers tables	Swings	Slides
1	Equipping of KABATI ECDE classroom	Ol moran	30	5	1	1	1	1
2	Equipping of NJORUA ECDE classroom	Githiga	30	5	1	1	1	1
3	Equipping of MARIAKANI ECDE classroom	Igwamiti	30	5	1	1	1	1
4	Equipping of MUTARA ECDE classroom	Ngobit	30	5	1	1	1	1
5	Equipping of ECDE classroom at KIMURI	Segera	30	5	1	1	1	1
6	Equipping of ECDE classroom at RANCH	Segera	30	5	1	1	1	1
7	Equipping of PP1 and pp2 ECDE classrooms in NGARENGIRO	Segera	60	10	2	2	2	2
8	Equipping of EMUNGUSHI ECDE	Mukogodo East	30	5	1	1	1	1
9	Equipping of LOKUSERO B ECDE	Mukogodo East	30	5	1	1	1	1
10	Equipping of PCEA MIRERA ECDE classroom	Thingithu	30	5	1	1	1	1
11	Equipping of LIKII ECDE	Nanyuki	30	5	0	0	0	0
12	Equipping of NTURUKUMA ECDE	Nanyuki	30	5	0	0	0	0
13	Equipping of ST. MOSES ECDE	Nanyuki	30	5	0	0	0	0
14	Equipping of Matuiku ECDE	Umande	30	5	0	0	0	0
15	Equipping of Mugumo ECDE	Umande	30	5	0	0	0	0
16	Equipping of Kalalu ECDE	Umande	30	5	0	0	0	0
			510	**85**	**11**	**11**	**11**	**11**

Prepared by James Ndeti

COUNTY GOVERNMENT OF LAIKIPIA
CHIEF OFFICER
15 SEP 2025
Sign.....
Department of Education, Social Services & ICT

Aproved by CO Jecinta Koree

Specification

Supply and install contract to be procured through international competition, the Procuring Entity's Requirements must be drawn up to permit the widest, possible competition and, at the same time, present a clear statement of the required standards of workmanship, materials and performance of the Facilities. Only if this is done will the objectives of economy, efficiency, fairness and transparency in procurement be realized, responsiveness of Tenders be ensured and the subsequent task of Tender evaluation facilitated.

In a design, supply and install approach, the design is to be done by the Contractor. No detailed technical specification as is normal practice is developed at the pre-Tender stage. However, the Procuring Entity does and must know what it wants and must communicate its needs to the Tenderers. Hence, this section on Procuring Entity's Requirements replaces the usual Technical Specifications of a more traditional approach.

While this section of the Tendering document should endeavor to define the Procuring Entity's Requirements as precisely as possible, care must be taken to avoid over specifying details to the extent that the flexibility and potential benefits associated with a design, supply and install contract are seriously eroded or threatened.

Care must be taken when drafting the Procuring Entity's Requirements to ensure that the requirements are not restrictive. Recognized international standards should be used as much as possible for the description of goods, materials and workmanship. Where other particular standards are specified, whether national standards of Kenya other standards, it should be stated that goods, materials and workmanship meeting other authoritative standards and which promise to ensure equal or higher quality than the standards specified, will also be acceptable. Where a brand name of a product is specified it should always be qualified with the terms “or equivalent”.

For a design, supply and install contract no detail drawings would generally be available at the pre-Tendering process stage. It would, however, be useful to include such conceptual drawings as are appropriate to supplement or help explain the general concept of the Procuring Entity's needs.

The Procuring Entity should specify any Environmental, Social, health, and safety requirements as appropriate.

Any sustainable procurement technical requirements shall be clearly specified. The requirements to be specified shall be specific enough to not demand evaluation based on rated criteria/ merit point system. The sustainable procurement requirements shall be specified to enable evaluation of such a requirement on a pass/ fail basis. To encourage Tenderers' innovation in addressing sustainable procurement requirements, as long as the Tender evaluation criteria specify the mechanism for monetary adjustments for the purpose of Tender comparisons, Tenderers may be invited to offer Plant that exceeds the specified minimum sustainable procurement requirements.

Where Tenderers are invited to submit alternative technical solutions for specified parts of the facilities, such parts shall be described in this Specification.

FORMS AND PROCEDURES

Form of Completion Certificate

Date:_____

ITT No:_____

To:_____

Dear Ladies and/or Gentlemen,

Pursuant to GCC Clause 24 (Completion of the Facilities) of the General Conditions of the Contract entered into between yourselves and the Procuring Entity dated_____, relating to the_____, we hereby notify you that the following part (s) of the Facilities was (were) complete on the date specified below, and that, in accordance with the terms of the Contract, the Procuring Entity hereby takes over the said part (s) of the Facilities, together with the responsibility for care and custody and the risk of loss thereof on the date mentioned below.

1. Description of the Facilities or part there of: _____
2. Date of Completion:_____

However, you are required to complete the outstanding items listed in the attachment hereto as soon as practicable.

This Form does not relieve you of your obligation to complete the execution of the Facilities in accordance with the Contract nor of your obligations during the Defect Liability Period.

Very truly yours,

Title (Project Manager)

FORM OF OPERATIONAL ACCEPTANCE CERTIFICATE

Date:_____

ITT No:_____

To: _____

Dear Ladies and/or Gentlemen,

Pursuant to GCC Sub-Clause 25.3 (Operational Acceptance) of the General Conditions of the Contract entered into between yourselves and the Procuring Entity dated_____, relating to the_____, we hereby notify you that the Functional Guarantees of the following part (s) of the Facilities were satisfactorily attained on the date specified below.

1. Description of the Facilities or part there of: _____
2. Date of Operational Acceptance: _____

This Form does not relieve you of your obligation to complete the execution of the Facilities in accordance with the Contract nor of your obligations during the Defect Liability Period.

Very truly yours,

Title (Project Manager)

CHANGE ORDER PROCEDURE AND FORMS

Date: .....

ITT No:

.....

CONTENTS

1. General
2. Change Order Log
3. References for Changes

ANNEXES

Annex 1: Request for Change Proposal

Annex 2: Estimate for Change Proposal

Annex 3: Acceptance of Estimate

Annex 4: Change Proposal

Annex 5: Change Order

Annex 6: Pending Agreement Change Order

Annex 7: Application for Change Proposal

Change Order Procedure

1. General

This section provides samples of procedures and forms for implementing changes in the Facilities during the performance of the Contract in accordance with GCC Clause 39 (Change in the Facilities) of the General Conditions.

2. Change Order Log

The Contractor shall keep an up-to-date Change Order Log to show the current status of Requests for Change and Changes authorized or pending, as Annex 8. Entries of the Changes in the Change Order Log shall be made to ensure that the log is up-to-date. The Contractor shall attach a copy of the current Change Order Log in the monthly progress report to be submitted to the Procuring Entity.

3. References for Changes

1) Request for Change as referred to in GCC Clause 39 shall be serially numbered CR-X-nnn.
2) Estimate for Change Proposal as referred to in GCC Clause 39 shall be serially numbered CN-X-nnn.
3) Acceptance of Estimate as referred to in GCC Clause 39 shall be serially numbered CA-X-nnn.
4) Change Proposal as referred to in GCC Clause 39 shall be serially numbered CP-X-nnn.
5) Change Order as referred to in GCC Clause 39 shall be serially numbered CO-X-nnn.

Note:

a) Requests for Change issued from the Procuring Entity's Home Office and the Site representatives of the Procuring Entity shall have the following respective references:
Home Office CR-H-nnn
Site CR-S-nnn

b) The above number “nnn” is the same for Request for Change, Estimate for Change Proposal, Acceptance of Estimate, Change Proposal and Change Order.

ANNEX 1. REQUEST FOR CHANGE PROPOSAL

(Procuring Entity's Form head)

To:_____ Date:_____

Attention:_____

Contract Name: _____

Contract Number: _____

Dear Ladies and/or Gentlemen:

With reference to the captioned Contract, you are requested to prepare and submit a Change Proposal for the Change noted below in accordance with the following instructions within_____days of the date of this Form_____.

1. Title of Change: _____
2. Change Request No._____
3. Originator of Change:
4. Procuring Entity: _____
5. Contractor (by Application for Change Proposal No._____:
6. Brief Description of Change: _____
7. Facilities and/or Item No. of equipment related to the requested Change:
8. Reference drawings and/ or technical documents for the request of

   Change: Drawing No./ Document No. Description
9. Detailed conditions or special requirements on the requested Change: _____
10. General Terms and Conditions:
    a) Please submit your estimate to us showing what effect the requested Change will have on the Contract Price.
    b) Your estimate shall include your claim for the additional time, if any, for completion of the requested Change.
    c) If you have any opinion negative to the adoption of the requested Change in connection with the conformability to the other provisions of the Contractor the safety of the Plant or Facilities, please inform us of your opinion in your proposal of revised provisions.
    d) Any increase or decrease in the work of the Contractor relating to the services of its personnel shall be calculated.
    e) You shall not proceed with the execution of the work for the requested Change until we have accepted and confirmed the amount and nature in writing.

(Procuring Entity's Name) .....

(Signature).....

(Name of signatory) .....

(Title of signatory) .....

ANNEX 2. ESTIMATE FOR CHANGE PROPOSAL

(Contractor's Form head)

To:_____ Date:_____

Attention:_____

Contract Name: _____

Contract Number: _____

Dear Ladies and/or Gentlemen:

With reference to your Request for Change Proposal, we are pleased to notify you of the approximate cost of preparing the below-referenced Change Proposal in accordance with GCC Sub-Clause 39.2.1 of the General Conditions. We acknowledge that your agreement to the cost of preparing the Change Proposal, in accordance with GCC Sub-Clause 39.2.2, is required before estimating the cost for change work.

1. Title of Change: _____
2. Change Request No./Rev.: _____
3. Brief Description of Change: _____
4. Scheduled Impact of Change: _____
5. Cost for Preparation of Change Proposal: _____ [9]
   a) Engineering (Amount)
      i) Engineer_____ hrsx_____ rate/hr=
      ii) Draftsperson_____ hrsx_____ rate/hr= Sub-total_____ hrs
      iii) Total Engineering Cost_____
   b) Other Cost

      Total Cost (a) + (b)

*(Contractor's Name)*_____

*(Signature)*_____

*(Name of signatory)*_____

_____

*(Title of signatory)*_____

[9] *Costs shall be in the currencies of the Contract.*

ANNEX 3. ACCEPTANCE OF ESTIMATE

(Procuring Entity's Form head)

To:_____ Date:_____

Attention:_____

Contract Name: _____

Contract Number: _____

Dear Ladies and/or Gentlemen:

We hereby accept your Estimate for Change Proposal and agree that you should proceed with the preparation of the Change Proposal.

1. Title of Change: _____
2. Change Request No./ Rev.: _____
3. Estimate for Change Proposal No./ Rev.: _____
4. Acceptance of Estimate No./ Rev.: _____
5. Brief Description of Change: _____
6. Other Terms and Conditions: In the event that we decide not to order the Change accepted, you shall be entitled to compensation for the cost of preparation of Change Proposal described in your Estimate for Change Proposal mentioned in para. 3 above in accordance with GCC Clause 39 of the General Conditions.

*(Procuring Entity's Name)*_____

*(Signature)*_____

*(Name and Title of signatory)*_____

ANNEX 4. CHANGE PROPOSAL

(Contractor's Form head)

To:_____ Date:_____

Attention:_____

Contract Name: _____

Contract Number: _____

Dear Ladies and/or Gentlemen:

In response to your Request for Change Proposal No._____, we hereby submit our proposal as follows:

1. Title of Change: _____
2. Change Proposal No./Rev.: _____
3. Originator of Change:
   Procuring Entity: _____

   Contractor: _____
4. Brief Description of Change: _____
5. Reasons for Change: _____
6. Facilities and/or Item No. of Equipment related to the requested Change: _____
7. Reference drawings and/ or technical documents for the requested Change: Drawing/ Document No. Description
8. Estimate of increase/ decrease to the Contract Price resulting from Change Proposal: (Amount)
   a) Direct material
   b) Major construction equipment
   c) Direct field labor (Total hrs)
   d) Subcontracts
   e) Indirect material and labor
   f) Site supervision
   g) Head office technical staff salaries

      Process engineer_____ hrs @_____ rate/hr

      Project engineer_____ hrs @_____ rate/hr

      Equipment engineer_____ hrs @_____ rate/hr

      Procurement_____ hrs@_____ rate/hr

      Drafts person_____ hrs@_____ rate/hr

      Total_____ hrs

   h) Extraordinary costs (computer, travel, etc.)
   i) Fee for general administration,_____% of Items
   j) Taxes and customs duties

Total lump sum cost of Change Proposal

(Sum of items (a) to (j))

Cost to prepare Estimate for Change Proposal (Amount payable if Change is not accepted)

9. Additional time for Completion required due to Change Proposal
10. Effect on the Functional Guarantees
11. Effect on the other terms and conditions of the Contract
12. Validity of this Proposal: within [Number] days after receipt of this Proposal by the Procuring Entity
13. Other terms and conditions of this Change Proposal:
    a) You are requested to notify us of your acceptance, comments or rejection of this detailed Change Proposal within_____days from your receipt of this Proposal.
    b) The amount of any increase and/or decrease shall be taken into account in the adjustment of the Contract Price.
    c) Contractor's cost for preparation of this Change Proposal:[2]

*(Contractor's Name)*_____

*(Signature)*_____

(Name of signatory)

_____*(*

*Title of signatory)*_____

[2] *Specify where necessary.*

ANNEX 5. CHANGE ORDER

(Procuring Entity's Form head)

To: _____

Date: _____

Attention: _____

Contract Name: _____

Contract Number: _____

Dear Ladies and/or Gentlemen:

We approve the Change Order for the work specified in the Change Proposal (No._____), and agree to adjust the Contract Price, Time for Completion and/or other conditions of the Contract in accordance with GCC Clause 39 of the General Conditions.

1. Title of Change: _____
2. Change Request No./Rev.: _____
3. Change Order No./ Rev.: _____
4. Originator of Change: _____ Procuring Entity: _____

   Contractor: _____
5. Authorized Price: _____

   Ref. No.: _____ Date: _____

   Foreign currency portion _____ plus Local currency portion _____
6. Adjustment of Time for Completion

   None Increase _____ Days Decrease _____ days
7. Other effects, if any

Authorized by: _____ Date: _____

(Procuring Entity)

Accepted by: _____ Date: _____

(Contractor)

ANNEX 6. PENDING AGREEMENT CHANGE ORDER

(Procuring Entity's Form head)

To:_____ Date:_____

Attention:_____

Contract Name: _____

Contract Number: _____

Dear Ladies and/or Gentlemen:

We instruct you to carry out the work in the Change Order detailed below in accordance with GCC Clause 39 of the General Conditions.

1. Title of Change: _____
2. Procuring Entity's Request for Change Proposal No./Rev.:_____ dated: _____
3. Contractor's Change Proposal No./Rev.:_____ dated: _____
4. Brief Description of Change: _____
5. Facilities and/or Item No. of equipment related to the requested Change: _____
6. Reference Drawings and/or technical documents for the requested Change:

   Drawing/Document No. Description

7. Adjustment of Time for Completion:
8. Other change in the Contract terms:
9. Other terms and conditions:

*(Procuring Entity's Name)*_____

*(Signature))*_____

(Name of signatory))

_____

*(Title of signatory))*_____

ANNEX 7. APPLICATION FOR CHANGE PROPOSAL

(Contractor's Form head)

To:_____ Date:_____

Attention:_____

Contract Name: _____

Contract Number: _____

Dear Ladies and/or Gentlemen:

We hereby propose that the below-mentioned work be treated as a Change in the Facilities.

1. Title of Change: _____
2. Application for Change Proposal No./Rev.:_____ dated:_____
3. Brief Description of Change: _____
4. Reasons for Change:
5. Order of Magnitude Estimation (in the currencies of the Contract):
6. Scheduled Impact of Change:
7. Effect on Functional Guarantees, if any:
8. Appendix:

*(Contractor's Name)*_____

*(Signature)*_____

*(Name of signatory)*_____

*(Title of signatory)*_____

DRAWINGS

SUPPLEMENTARY INFORMATION

PART 3 – CONDITIONS OF CONTRACT AND CONTRACT FORMS

GENERAL CONDITIONS OF CONTRACT

A. Contract and Interpretation

1. Definitions

1.1 The following words and expressions shall have the meanings here by assigned to them:

"Contract" means the Contract Agreement entered into between the Procuring Entity and the Contractor, together with the Contract Documents referred to there in; they shall constitute the Contract, and the term "the Contract" shall in all such documents be construed accordingly.

"Contract Documents" means the documents listed in Article 1.1 (Contract Documents) of the Contract Agreement (including any amendments thereto).

"GCC" means the General Conditions of Contract hereof. "SCC" means the Special Conditions of Contract.

"day" means calendar day. "year" means 365 days. "month" means calendar month.

"Party" means the Procuring Entity or the Contractor, as the context requires, and "Parties" means both of them.

"Procuring Entity" means the public entity named as such in the SCC and includes the legal successors or permitted assigns of the Procuring Entity.

"Project Manager" means the person appointed by the Procuring Entity in the manner provided in GCC Sub-Clause 17.1 (Project Manager) hereof and named as such in the SCC to perform the duties delegated by the Procuring Entity.

"Contractor" means the person(s) whose Tender to perform the Contract has been accepted by the Procuring Entity and is named as Contractor in the Contract Agreement, and includes the legal successors or permitted assigns of the Contractor.

"Contractor's Representative" means any person nominated by the Contractor and approved by the Procuring Entity in the manner provided in GCC Sub-Clause 17.2 (Contractor's Representative and Construction Manager) here of to perform the duties delegated by the Contractor.

"Construction Manager" means the person appointed by the Contractor's Representative in the manner provided in GCC Sub-Clause 17.2.4.

"Subcontractor," including manufacturers, means any person to whom execution of any part of the Facilities, including preparation of any design or supply of any Plant, is sub-contracted directly or indirectly by the Contractor, and includes its legal successors or permitted assigns.

"Dispute Board" (DB) means the person or persons named as such in the SCC appointed by agreement between the Procuring Entity and the Contractor to make a decision with respect to any dispute or difference between the Procuring Entity and the Contractor referred to him or her by the Parties pursuant to GCC Sub-Clause 46.1 (Dispute Board) hereof.

"Contract Price" means the sum specified in Article 2.1 (Contract Price) of the Contract Agreement, subject to such additions and adjustments there to or deductions there from, as may be made pursuant to the Contract.

"Facilities" means the Plant to be supplied and installed, as well as all the Installation Services to be carried out by the Contractor under the Contract.

"Plant" means permanent plant, equipment, machinery, apparatus, materials, articles and things of all kinds to be provided and incorporated in the Facilities by the Contractor under the Contract (including the spare parts to be supplied by the Contractor under GCC Sub-Clause7.3 here of), but does not include Contractor's Equipment.

"Installation Services" means all those services ancillary to the supply of the Plant for the Facilities, to be provided by the Contractor under the Contract, such as transportation and provision of marine or other similar insurance, inspection, expediting, site preparation works (including the provision and use of Contractor's Equipment and the supply of all construction materials required), installation, testing, pre-commissioning, commissioning, operations, maintenance, the provision of operations and maintenance manuals, training, etc…as the case may require.

"Contractor's Equipment" means all facilities, equipment, machinery, tools, apparatus, appliances or things of every kind required in or for installation, completion and maintenance of Facilities that are to be provided by the Contractor, but does not include Plant, or other things intended to form or forming part of the Facilities.

"Country of Origin" means the countries and territories eligible as elaborated in the SCC.

"Site" means the land and other places upon which the Facilities are to be installed, and such other land or places as may be specified in the Contract as forming part of the Site.

"Effective Date" means the date of fulfillment of all conditions stated in Article 3 (Effective Date) of the Contract Agreement, from which the Time for Completion shall be counted.

"Time for Completion" means the time within which Completion of the Facilities as a whole (or of a part of the Facilities where a separate Time for Completion of such part has been prescribed) is to be attained, as referred to in GCC Clause8 and in accordance with the relevant provisions of the Contract.

"Completion" means that the Facilities (or a specific part thereof where specific parts are specified in the Contract) have been completed operationally and structurally and put in a tight and clean condition, that all work in respect of Pre-commissioning of the Facilities or such specific part thereof has been completed, and that the Facilities or specific part thereof are ready for Commissioning as provided in GCC Clause 24 (Completion) hereof.

"Pre-commissioning" means the testing, checking and other requirements specified in the Procuring Entity's Requirements that are to be carried out by the Contractor in preparation for Commissioning as provided in GCC Clause24 (Completion) hereof.

"Commissioning" means operation of the Facilities or any part thereof by the Contractor following Completion, which operation is to be carried out by the Contractor as provided in GCC Sub-Clause 25.1 (Commissioning) hereof, for the purpose of carrying out Guarantee Test(s).

"Guarantee Test(s)" means the test(s) specified in the Procuring Entity's Requirements to be carried out to ascertain whether the Facilities or a specified part thereof is able to attain the Functional Guarantees specified in the Appendix to the Contract Agreement titled Functional Guarantees, in accordance with the provisions of GCC Sub-Clause25.2 (Guarantee Test) hereof.

"Operational Acceptance" means the acceptance by the Procuring Entity of the Facilities (or any part of the Facilities where the Contract provides for acceptance of the Facilities in parts), which certifies the Contractor's fulfillment of the Contract in respect of Functional Guarantees of the Facilities (or the relevant part thereof) in accordance with the provisions of GCC Clause 28 (Functional Guarantees) hereof and shall include deemed acceptance in accordance with GCC Clause 25 (Commissioning and Operational Acceptance) hereof.

"Defect Liability Period" means the period of validity of the warranties given by the Contractor commencing at Completion of the Facilities or a part thereof, during which the Contractor is responsible for defects with respect to the Facilities (or the relevant part thereof) as provided in GCC Clause 27(Defect Liability) hereof.

"Notice of Dissatisfaction" means the notice given by either Party to the other under Sub-Clause 46.4 indicating its dissatisfaction and intention to commence arbitration.

2. Contract Documents

2.1 Subject to Article 1.2 (Order of Precedence) of the Contract Agreement, all documents forming part of the Contract (and all parts thereof) are intended to be correlative, complementary and mutually explanatory. The Contract shall be read as a whole.

3. Interpretation

3.1 In the Contract, except where the context requires otherwise:

a) Words indicating one gender include all genders;
b) words indicating the singular also include the plural and words indicating the plural also include the singular;
c) provisions including the word “agree,” “agreed,” or “agreement” require the agreement to be recorded in writing;
d) the word “tender” is synonymous with “Tender,” “tenderer,” with “Tenderer,” and “tender documents” with “Tendering Document,” and
e) “written” or “in writing” means hand-written, type-written, printed or electronically made, and resulting in a permanent record.

The marginal words and other headings shall not be taken in to consideration in the interpretation of these Conditions.

3.2 Incoterms

Unless inconsistent with any provision of the Contract, the meaning of any trade term and the rights and obligations of Parties thereunder shall be as prescribed by Incoterms.

Incoterms means international rules for interpreting trade terms published by the International Chamber of Commerce (latest edition), 38 C ours Albert 1er, 75008 Paris, France.

3.3 Entire Agreement

3.3.1 Subject to GCC Sub-Clause 16.4 hereof, the Contract constitutes the entire agreement between the Procuring Entity and Contractor with respect to the subject matter of Contract and supersedes all communications, negotiations and agreements (whether written or oral) of Parties with respect there to made prior to the date of Contract.

3.4 Amendment

No amendment or other variation of the Contract shall be effective unless it is in writing, is dated, expressly refers to the Contract, and is signed by a duly authorized representative of each Party hereto.

3.5 Independent Contractor

The Contractor shall be an independent contract or performing the Contract. The Contract does not create any agency, partnership, joint venture or other joint relationship between the Parties hereto. Subject to the provisions of the Contract, the Contractor shall be solely responsible for the manner in which the Contract is performed. All employees, representatives or Subcontractors engaged by the Contractor in connection with the performance of the Contract shall be under the complete control of the Contractor and shall not be deemed to be employees of the Procuring Entity, and nothing contained in the Contractor in any subcontract awarded by the Contractor shall be construed to create any contractual relationship between any such employees, representatives or Subcontractors and the Procuring Entity.

3.6 Non-Waiver

3.6.1 Subject to GCC Sub-Clause 3.6.2 below, no relaxation, forbearance, delay or indulgence by either Party in enforcing any of the terms and conditions of the Contract or the granting of time by either Party to the other shall prejudice, affect or restrict the rights of that Party under the Contract, nor shall any waiver by either Party of any breach of Contract operate as waiver of any subsequent or continuing breach of Contract.

3.6.2 Any waiver of a Party's rights, powers or remedies under the Contract must be in writing, must be dated and signed by an authorized representative of the Party granting such waiver, and must specify the right and the extent to which it is being waived.

3.7 Severability

If any provision or condition of the Contract is prohibited or rendered invalid or unenforceable, such prohibition, in validity or unenforced ability shall not affect the validity or enforce ability of any other provisions and conditions of the Contract.

3.8 Country of Origin

"Origin" means the place where the plant and component parts thereof are mined, grown, produced or manufactured, and from which the services are provided. Plant components are produced when, through manufacturing, processing, or substantial or major assembling of components, a commercially recognized product results that is substantially in its basic characteristics or in purpose or utility from its components.

4 Communications

4.3 Wherever these Conditions provide for the giving or issuing of approvals, certificates, consents, determinations, notices, requests and discharges, these communications shall be:

a In writing and delivered against receipt; and
b delivered, sent or transmitted to the address for the recipient's communications as stated in the Contract Agreement.

When a certificate is issued to a Party, the certifier shall send a copy to the other Party. When a notice is issued to a Party, by the other Party or the Project Manager, a copy shall be sent to the Project Manager or the other Party, as the case may be.

5 Law and Language

5.3 The Contract shall be governed by in accordance with laws of Kenya
5.4 The ruling language of the Contract shall be English Language.
5.5 The language for communications shall be the English language.

6 Fraud and Corruption

6.1 The Procuring Entity requires compliance with the provisions of the Public Procurement and Asset Disposal Act, 2015, Section 62 as set forth in Section ….." Declaration not to engage in corruption". The tender submitted by a person shall include a declaration that the person shall not engage in any corrupt or fraudulent practice and a declaration that the person or his or her sub-contractors are not debarred from participating in public procurement proceedings.
6.2 Tenderers shall permit and shall cause their agents (where declared or not), subcontractors, sub-consultants, service providers, suppliers, and their personnel, to permit the PPRA to inspect all accounts, records and other documents relating to any initial selection process, prequalification process, tender submission, proposal submission, and contract performance (in the case of award), and to have them audited by auditors appointed by the PPRA.

B. Subject Matter of Contract

7 Scope of Facilities

7.1 Unless otherwise expressly limited in the Procuring Entity's Requirements, the Contractor's obligations cover the provision of all Plant and the performance of all Installation Services required for the design, and the manufacture (including procurement, quality assurance, construction, installation, associated civil works, Pre-commissioning and delivery) of the Plant, and the installation, completion and commissioning of the Facilities in accordance with the plans, procedures, specifications, drawings, codes and any other documents as specified in the Section, Procuring Entity's Requirements. Such specifications include, but are not limited to, the provision of supervision and engineering services; the supply of labor, materials, equipment, spare parts (as specified in GCC Sub-Clause 7.3 below) and accessories; Contractor's Equipment; construction utilities and supplies; temporary materials, structures and facilities; transportation (including, without limitation, unloading and hauling to, from and at the Site); and storage, except for those supplies, works and services that will be provided or performed by the Procuring Entity, asset for thin the Appendix to the Contract Agreement titled Scope of Works and Supply by the Procuring Entity.
7.2 The Contractor shall, unless specifically excluded in the Contract, perform all such work and/or supply all such items and materials not specifically mentioned in the Contract but that can be reasonably inferred from the Contract as being required for attaining Completion of the Facilities as if such work and/or items and materials were expressly mentioned in the Contract.

7.3 In addition to the supply of Mandatory Spare Parts included in the Contract, the Contractor agrees to supply spare parts required for the operation and maintenance of the Facilities for the period specified in the SCC and the provisions, if any, specified in the SCC. However, the identity, specifications and quantities of such spare parts and the terms and conditions relating to the supply there of are to be agreed between the Procuring Entity and the Contractor, and the price of such spare parts shall be that given in Price Schedule No.6, which shall be added to the Contract Price. The price of such spare parts shall include the purchase price there for and other costs and expenses (including the Contractor's fees) relating to the supply of spare parts.

8 Time for Commencement and Completion

8.1 The Contractor shall commence work on the Facilities within the period specified in the SCC and without prejudice to GCC Sub-Clause 26.2 hereof, the Contractor shall thereafter proceed with the Facilities in accordance with the time schedule specified in the Appendix to the Contract Agreement titled Time Schedule.

8.2 The Contractor shall attain Completion of the Facilities or of a part where a separate time for Completion of such part is specified in the Contract, within the time stated in the SCC or within such extended time to which the Contractor shall be entitled under GCC Clause 40 hereof.

9 Contractor's Responsibilities

9.1 The Contractor shall design, manufacture including associated purchases and/or subcontracting, install and complete the Facilities in accordance with the Contract. When completed, the Facilities should be fit for the purposes for which they are intended as defined in the Contract.

9.2 The Contractor confirms that it has entered in to this Contract on the basis of a proper examination of the data relating to the Facilities including any data as to boring tests provided by the Procuring Entity, and on the basis of information that the Contractor could have obtained from a visual inspection of the Site if access there to was available and of other data readily available to it relating to the Facilities as of the date twenty-eight (28) days prior to Tender submission. The Contractor acknowledges that any failure to acquaint itself with all such data and information shall not relieve its responsibility for properly estimating the difficulty or cost of successfully performing the Facilities.

9.3 The Contractor shall acquire and pay for all permits, approvals and /or licenses from all local, state or national government authorities or public service undertakings in the country where the Site is located which such authorities or undertakings require the Contractor to obtain in its name and which are necessary for the performance of the Contract, including, without limitation, visas for the Contractor's and Subcontractor's personnel and entry permits for all imported Contractor's Equipment. The Contractor shall acquire all other permits, approvals and/or licenses that are not the responsibility of the Procuring Entity under GCC Sub-Clause10.3 hereof and that are necessary for the performance of the Contract.

9.4 The Contractor shall comply with all laws in force in the country where the Facilities are to be implemented. The laws will include all local, state, national or other laws that affect the performance of the Contract and bind upon the Contractor. The Contractor shall indemnify and hold harmless the Procuring Entity from and against any and all liabilities, damages, claims, fines, penalties and expenses of whatever nature arising or resulting from the violation of such laws by the Contractor or its personnel, including the Subcontractors and their personnel, but without prejudice to GCC Sub-Clause 10.1 hereof.

9.5 Any Plant and Installation Services that will be incorporated in or be required for the Facilities and other supplies shall have their origin as specified under GCC Clause 1 (Country of Origin). Any subcontractors retained by the Contractor shall be from a country as specified in GCC Clause1 Country of Origin).

9.6 If the Contractor is a joint venture, or association (JV) of two or more persons, all such persons shall be jointly and severally bound to the Procuring Entity for the fulfillment of the provisions of the Contract, and shall designate one of such persons to act as a leader with authority to bind the JV. The composition or the constitution of the JV shall not be altered without the prior consent of the Procuring Entity.

9.7 Pursuant to paragraph 2.2 e. of Appendix B to the General Conditions the Contractor shall permit and shall cause its subcontractors and sub-consultants to permit, PPRA and/or persons appointed by PPRA to inspect the Site and/or the accounts and records relating to the procurement process, selection and/or contract execution, and to have such accounts and records audited by auditors appointed by PPRA. The Contractor's and its Subcontractors' and sub-consultants' attention is drawn to Sub-Clause 6.1 which provides, interalia, that acts intended to materially impede the exercise of the PPRA's inspection and audit rights constitute a prohibited practice subject to contract termination.

9.8 The Contractor shall conform to the sustainable procurement contractual provisions, if and as specified in the

SCC.

10 Procuring Entity's Responsibilities

10.1 All information and/or data to be supplied by the Procuring Entity as described in the Appendix to the Contract Agreement titled Scope of Works and Supply by the Procuring Entity, shall be deemed to be accurate, except when the Procuring Entity expressly states otherwise.

10.2 The Procuring Entity shall be responsible for acquiring and providing legal and physical possession of the Site and access thereto, and for providing possession of and access to all other areas reasonably required for the proper execution of the Contract, including all requisite rights of way, as specified in the Appendix to the Contract Agreement titled Scope of Works and Supply by the Procuring Entity. The Procuring Entity shall give full possession of an accord all rights of access there to on or before the date (s) specified in that Appendix.

10.3 The Procuring Entity shall acquire and pay for all permits, approvals and/or licenses from all local, state or national government authorities or public service under takings in the country where the Site is located which such authorities or under takings require the Procuring Entity to obtain in the Procuring Entity's name, (b) are necessary for the execution of the Contract, including those required for the performance by both the Contractor and the Procuring Entity of their respective obligations under the Contract, and (c) are specified in the Appendix (Scope of Works and Supply by the Procuring Entity).

10.4 If requested by the Contractor, the Procuring Entity shall use its best endeavors to assist the Contractor in obtaining in a timely and expeditious manner all permits, approvals and/or licenses necessary for the execution of the Contract from all local, state or national government authorities or public service under takings that such authorities or undertakings require the Contractor or Subcontractors or the personnel of the Contractor or Subcontractors, as the case may be, to obtain.

10.5 Unless otherwise specified in the Contract or agreed upon by the Procuring Entity and the Contractor, the Procuring Entity shall provide sufficient, properly qualified operating and maintenance personnel; shall supply and make available all raw materials, utilities, lubricants, chemicals, catalysts, other materials and facilities; and shall perform all work and services of whatsoever nature, including those required by the Contractor to properly carry out Pre-commissioning, Commissioning and Guarantee Tests, all in accordance with the provisions of the Appendix to the Contract Agreement titled Scope of Works and Supply by the Procuring Entity, at or before the time specified in the program furnished by the Contractor under GCC Sub-Clause18.2 hereof and in the manner thereupon specified or as otherwise agreed upon by the Procuring Entity and the Contractor.

10.6 The Procuring Entity shall be responsible for the continued operation of the Facilities after Completion, in accordance with GCC Sub-Clause 24.8, and shall be responsible for facilitating the Guarantee Test (s) for the Facilities, in accordance with GCC Sub-Clause 25.2.

10.7 All costs and expenses involved in the performance of the obligations under this GCC Clause 10 shall be the responsibility of the Procuring Entity, save those to be incurred by the Contractor with respect to the performance of Guarantee Tests, in accordance with GCC Sub-Clause25.2.

10.8 In the event that the Procuring Entity shall be in breach of any of his obligations under this Clause, the additional cost incurred by the Contractor in consequence there of shall be determined by the Project Manager and added to the Contract Price.

C. Payment

11 Contract Price

11.1 Contract as specified in Article 2 (Contract Price and Terms of Payment) of the Contract Agreement.

11.2 Unless an adjustment clause is provided for in the SCC, the Contract Price shall be a firm lump sum not subject to any alteration, except in the event of a Change in the Facilities or as otherwise provided in the Contract.

11.3 Subject to GCC Sub-Clauses 9.2,10.1 and 35 hereof, the Contractor shall be deemed to have satisfied itself as to the correctness and sufficiency of the Contract Price, which shall, except as otherwise provided for in the Contract, cover all its obligations under the Contract.

12 Terms of Payment

12.1 The Contract Price shall be paid as specified in Article 2 (Contract Price and Terms of Payment) of the Contract Agreement and in the Appendix to the Contract Agreement titled Terms and Procedures of Payment, which also outlines the procedures to be followed in making application for and processing payments.

12.2 No payment made by the Procuring Entity herein shall be deemed to constitute acceptance by the Procuring Entity of the Facilities or any part (s) thereof.

12.3 In the event that the Procuring Entity fails to make any payment by its respective due date or within the period set for thin the Contract, the Procuring Entity shall pay to the Contractor interest on the amount of such delayed payment at the rate(s) shown in the Appendix to the Contract Agreement titled Terms and Procedures of Payment, for the period of delay until payment has been made in full, whether before or after judgment or arbitrage award.

12.4 The currency or currencies in which payments are made to the Contractor under this Contract shall be specified in the Appendix to the Contract Agreement titled Terms and Procedures of Payment, subject to the general principle that payments will be made in the currency or currencies in which the Contract Price has been stated in the Contractor's Tender.

13 Securities

13.1 Issuance of Securities

The Contractor shall provide the securities specified below in favor of the Procuring Entity at the times, and in the amount, manner and form specified below.

13.2 Advance Payment Security

13.2.1 The Contractor shall, within twenty-eight (28) days of the notification of contract award, provide a security in an amount equal to the advance payment calculated in accordance with the Appendix to the Contract Agreement titled Terms and Procedures of Payment, and in the same currency or currencies.

13.2.2 The security shall be in the form provided in the Tendering documents or in another form acceptable to the Procuring Entity. The amount of the security shall be reduced in proportion to the value of the Facilities executed by and paid to the Contractor from time to time, and shall automatically become null and void when the full amount of the advance payment has been recovered by the Procuring Entity. The security shall be returned to the Contractor immediately after its expiration.

13.3 Performance Security

13.3.1 The Contractor shall, within twenty-eight (28) days of the notification of contract award, provide a security for the due performance of the Contract in the amount specified in the **SCC**.

13.3.2 The Performance Security shall be denominated in the currency or currencies of the Contract, or in a freely convertible currency acceptable to the Procuring Entity, and shall be in the form provided in Section X, Contract Forms, corresponding to the type of bank guarantee stipulated by the Procuring Entity in the **SCC**, or in another form acceptable to the Procuring Entity.

13.3.3 Unless otherwise specified in the **SCC**, the security shall be reduced by half on the date of the Operational Acceptance. The Security shall become null and void, or shall be reduced prorata to the Contract Price of a part of the Facilities for which a separate Time for Completion is provided, five hundred and forty (540) days after Completion of the Facilities or three hundred and sixty five (365) days after Operational Acceptance of the Facilities, whichever occurs first; provided, however, that if the Defects Liability Period has been extended on any part of the Facilities pursuant to GCC Sub-Clause27.8 hereof, the Contractor shall issue an additional security in an amount proportionate to the Contract Price of that part. The security shall be returned to the Contractor immediately after its expiration, provided, however, that if the Contractor, pursuant to GCC Sub-Clause 27.10, is liable for an extended defect liability obligation, the Performance Security shall be extended for the period specified in the **SCC** pursuant to GCC Sub-Clause 27.10 and up to the amount specified in the **SCC**.

13.3.4 The Procuring Entity shall not make a claim under the Performance Security, except for amounts to which the Procuring Entity is entitled under the Contract. The Procuring Entity shall indemnify and hold the Contractor harmless against and from all damages, losses and expenses (including legal fees and expenses) resulting from a claim under the Performance Security to the extent to which the Procuring Entity was not entitled to make the claim.

14 Taxes and Duties

14.1 Except as otherwise specifically provided in the Contract, the Contractor shall bear and pay all taxes, duties, levies and charges assessed on the Contractor, its Subcontractors or their employees by all municipal, state or national government authorities in connection with the Facilities in and outside of the country where the Site is located.

14.2 If any tax exemptions, reductions, allowances or privileges may be available to the Contractor in Kenya, the

Procuring Entity shall use its best endeavors to enable the Contractor to benefit from any such tax savings to the maximum allowable extent.

14.3 For the purpose of the Contract, it is agreed that the Contract Price specified in Article 2 (Contract Price and Terms of Payment) of the Contract Agreement is based on the taxes, duties, levies and charges prevailing at the date twenty-eight (28) days prior to the date of Tender submission in Kenya (hereinafter called "Tax" in this GCC Sub-Clause14.4). If any rates of Tax are increased or decreased, a new Tax is introduced, an existing Tax is abolished, or any change in interpretation or application of any Tax occurs in the course of the performance of Contract, which was or will be assessed on the Contractor, Subcontractors or their employees in connection with performance of the Contract, an equitable adjustment of the Contract Price shall be made to fully take in to account any such change by addition to the Contract Price or deduction therefrom, as the case may be, in accordance with GCC Clause36 hereof.

A. Intellectual Property

15 License/Use of Technical Information

15.1 For the operation and maintenance of the Plant, the Contractor hereby grants a non-exclusive and non-transferable license (without the right to sub-license) to the Procuring Entity under the patents, utility models or other industrial property rights owned by the Contractor or by a third Party from whom the Contractor has received the right to grant licenses there under, and shall also grant to the Procuring Entity a non-exclusive and non-transferable right (without the right to sub-license) to use the know-how and other technical information disclosed to the Procuring Entity under the Contract. Nothing contained herein shall be construed as transferring ownership of any patent, utility model, trademark, design, copyright, know-how or other intellectual property right from the Contractor or any third Party to the Procuring Entity.

15.2 The copy right in all drawings, documents and other materials containing data and information furnished to the Procuring Entity by the Contractor here in shall remain vested in the Contractor or, if they are furnished to the Procuring Entity directly or through the Contractor by any third Party, including suppliers of materials, the copy right in such materials shall remain vested in such third Party.

16 Confidential Information

16.1 The Procuring Entity and the Contractor shall keep confidential and shall not, without the written consent of the other Party hereto, divulge to any third Party any documents, data or other information furnished directly or indirectly by the other Party hereto in connection with the Contract, whether such information has been furnished prior to, during or following termination of the Contract. Notwithstanding the above, the Contractor may furnish to its Subcontractor (s) such documents, data and other information it receives from the Procuring Entity to the extent required for the Subcontractor (s) to perform its work under the Contract, in which event the Contractor shall obtain from such Subcontractor (s) an under taking of confidentiality similar to that imposed on the Contractor under this GCC Clause16.

16.2 The Procuring Entity shall not use such documents, data and other information received from the Contractor for any purpose other than the operation and maintenance of the Facilities. Similarly, the Contractor shall not use such documents, data and other information received from the Procuring Entity for any purpose other than the design, procurement of Plant, construction or such other work and services as are required for the performance of the Contract.

16.3 The obligation of a Party under GCC Sub-Clauses 16.1 and 16.2 above, however, shall not apply to that information which

a Now or here after enters the public domain through no fault of that Party

b can be proven to have been possessed by that Party at the time of disclosure and which was not previously obtained, directly or indirectly, from the other Party hereto

c otherwise lawfully becomes available to that Party from a third Party that has no obligation of confidentiality.

16.4 The above provisions of this GCC Clause 16 shall not in any way modify any undertaking of confidentiality given by either of the Parties hereto prior to the date of the Contract in respect of the Facilities or any part thereof.

16.5 The provisions of this GCC Clause 16 shall survive termination, for whatever reason, of the Contract.

B. Execution of the Facilities

17 Representatives

17.1 Project Manager

If the Project Manager is not named in the Contract, then within fourteen (14) days of the Effective Date, the Procuring Entity shall appoint and notify the Contractor in writing of the name of the Project Manager. The Procuring Entity may from time to time appoint some other person as the Project Manager in place of the person previously so appointed, and shall give a notice of the name of such other person to the Contractor without delay. No such appointment shall be made at such a time or in such a manner as to impede the progress of work on the Facilities. Such appointment shall only take effect upon receipt of such notice by the Contractor. The Project Manager shall represent and act for the Procuring Entity at all times during the performance of the Contract. All notices, instructions, orders, certificates, approvals and all other communications under the Contract shall be given by the Project Manager, except as here in otherwise provided.

All notices, instructions, information and other communications given by the Contractor to the Procuring Entity under the Contract shall be given to the Project Manager, except as herein otherwise provided.

17.2 Contractor's Representative & Construction Manager

17.2.1 If the Contractor's Representative is not named in the Contract, then within fourteen (14) days of the Effective Date, the Contractor shall appoint the Contractor's Representative and shall request the Procuring Entity in writing to approve the person so appointed. If the Procuring Entity makes no objection to the appointment within fourteen (14) days, the Contractor's Representative shall be deemed to have been approved. If the Procuring Entity objects to the appointment within fourteen (14) days giving the reason therefor, then the Contractor shall appoint a replacement within fourteen (14) days of such objection, and the foregoing provisions of this GCC Sub-Clause17.2.1 shall apply thereto.

17.2.2 The Contractor's Representative shall represent and act for the Contractor at all times during the performance of the Contract and shall give to the Project Manager all the Contractor's notices, instructions, information and all other communications under the Contract.

17.2.3 All notices, instructions, information and all other communications given by the Procuring Entity or the Project Manager to the Contractor under the Contract shall be given to the Contractor's Representative or, in its absence, its deputy, except as herein otherwise provided.

17.2.4 The Contractor shall not revoke the appointment of the Contractor's Representative without the Procuring Entity's prior written consent, which shall not be unreasonably withheld. If the Procuring Entity consents thereto, the Contractor shall appoint some other person as the Contractor's Representative, pursuant to the procedure set out in GCC Sub-Clause 17.2.1.

17.2.5 The Contractor's Representative may, subject to the approval of the Procuring Entity which shall not be unreasonably withheld, at any time delegate to any person any of the powers, functions and authorities vested in him or her. Any such delegation may be revoked at any time. Any such delegation or revocation shall be subject to a prior notice signed by the Contractor's Representative, and shall specify the powers, functions and authorities there by delegated or revoked. No such delegation or revocation shall take effect unless and until a copy there of has been delivered to the Procuring Entity and the Project Manager.

17.2.6 Any actor exercise by any person of powers, functions and authorities so delegated to him or her in accordance with this GCC Sub-Clause 17.2.3 shall be deemed to be an actor exercise by the Contractor's Representative.

17.2.7 From the commencement of installation of the Facilities at the Site until Completion, the Contractor's Representative shall appoint a suitable person as the Construction Manager. The Construction Manager shall supervise all work done at the Site by the Contractor and shall be present at the Site throughout normal working hours except when on leave, sick or absent for reasons connected with the proper performance of the Contract. Whenever the Construction Manager is absent from the Site, a suitable person shall be appointed to act as the Construction Manager's deputy.

17.2.8 The Procuring Entity may by notice to the Contractor object to any representative or person employed by the Contractor in the execution of the Contract who, in the reasonable opinion of the Procuring Entity, may be have inappropriately, may be incompetent or negligent, or may commit a serious breach of the Site regulations provided under GCC Sub-Clause 22.4. The Procuring Entity shall provide evidence of the same, where upon the Contractor shall remove such person from the Facilities.

17.2.9 If any representative or person employed by the Contractor is removed in accordance with GCC Sub-Clause 17.2.5, the Contractor shall, where required, promptly appoint a replacement.

18 Work Program

18.1 Contractor's Organization

The Contractor shall supply to the Procuring Entity and the Project Manager a chart showing the proposed organization to be established by the Contractor for carrying out work on the Facilities within twenty-one (21) days of the Effective Date. The chart shall include the identities of the key personnel and the curricula vitae of such key personnel to be employed shall be supplied together with the chart. The Contractor shall promptly inform the Procuring Entity and the Project Manager in writing of any revision or alteration of such an organization chart.

18.2 Program of Performance

Within twenty-eight (28) days after the Effective Date, the Contractor shall submit to the Project Manager a detailed program of performance of the Contract, made in a form acceptable to the Project Manager and showing the sequence in which it proposes to design, manufacture, transport, assemble, install and pre-commission the Facilities, as well as the date by which the Contractor reasonably requires that the Procuring Entity shall have fulfilled its obligations under the Contract so as to enable the Contractor to execute the Contract in accordance with the program and to achieve Completion, Commissioning and Acceptance of the Facilities in accordance with the Contract. The program so submitted by the Contractor shall accord with the Time Schedule included in the Appendix to the Contract Agreement titled Time Schedule, and any other dates and periods specified in the Contract. The Contractor shall update and revise the program as and when appropriate or when required by the Project Manager, but without modification in the Times for Completion specified in the **SCC** pursuant to Sub-Clause 8.2 and any extension granted in accordance with GCC Clause 40, and shall submit all such revisions to the Project Manager.

18.3 Progress Report

The Contractor shall monitor progress of all the activities specified in the program referred to in GCC Sub-Clause 18.2 above, and supply a progress report to the Project Manager every month.

The progress report shall be in a form acceptable to the Project Manager and shall indicate: (a) percentage completion achieved compared with the planned percentage completion for each activity; and (b) where any activity is behind the program, giving comments and likely consequences and stating the corrective action being taken.

18.4 Progress of Performance

If at any time the Contractor's actual progress falls behind the program referred to in GCC Sub-Clause 18.2, or it becomes apparent that it wills of all behind, the Contractor shall, at the request of the Procuring Entity or the project Manager, prepare and submit to the Project Manager a revised program, taking into account the prevailing circumstances, and shall notify the Project Manager of the steps being taken to expedite progress so as to attain Completion of the Facilities within the Time for Completion under GCC Sub-Clause 8.2, any extension thereof entitled under GCC Sub-Clause 40.1, or any extended period as may otherwise be agreed upon between the Procuring Entity and the Contractor.

18.5 Procedures

The Contract shall be executed in accordance with the Contract Documents including the procedures given in the Forms and Procedures of the Procuring Entity's Requirements.

The Contractor may execute the Contract in accordance with its own standard project execution plans and procedures to the extent that they do not conflict with the provisions contained in the Contract.

19 Subcontracting

19.1 The Appendix to the Contract Agreement titled List of Major Items of Plant and Installation Services and List of Approved Subcontractors, specifies major items of supply or services and a list of approved Subcontractors against each item, including manufacturers. In so far as no Subcontractors are listed against any such item, the Contractor shall prepare a list of Subcontractors for such item for inclusion in such list. The Contractor may from time to time propose any addition to or deletion from any such list. The Contractor shall submit any such list or any modification thereto to the Procuring Entity for its approval in sufficient time so as not to impede the progress of work on the Facilities. Such approval by the Procuring Entity for any of the Subcontractors shall not relieve the Contractor from any of its obligations, duties or responsibilities under the Contract.

19.2 The Contractor shall select and employ its Subcontractors for such major items from those listed in the lists referred to in GCC Sub-Clause19.1.

19.3 For items or parts of the Facilities not specified in the Appendix to the Contract Agreement titled List of Major Items of Plant and Installation Services and List of Approved Subcontractors, the Contractor may employ such Subcontractors as it may select, at its discretion.

19.4 Each sub-contract shall include provisions which would entitle the Procuring Entity to require the sub-contract to be assigned to the Procuring Entity under GCC19.5 (if and when applicable), or in event of termination by the Procuring Entity under GCC 42.2.

19.5 If a subcontractor's obligations extend beyond the expiry date of the relevant Defects Liability Period and the Project Manager, prior to that date, instructs the Contractor to assign the benefits of such obligations to the Procuring Entity, then the Contractor shall do so.

20` Design and Engineering

20.1 Specifications and Drawings

20.1.1 The Contractor shall execute the basic and detailed design and the engineering work in compliance with the provisions of the Contract, or where not so specified, in accordance with good engineering practice.

20.1.2 The Contractor shall be responsible for any discrepancies, errors or omissions in the specifications, drawings and other technical documents that it has prepared, whether such specifications, drawings and other documents have been approved by the Project Manager or not, provided that such discrepancies, errors or omissions are not because of inaccurate information furnished in writing to the Contractor by or on behalf of the Procuring Entity.

20.1.2 The Contractor shall be entitled to disclaim responsibility for any design, data, drawing, specification or other document, or any modification thereof provided or designated by or on behalf of the Procuring Entity, by giving a notice of such disclaimer to the Project Manager.

20.2 Codes and Standards

Wherever references are made in the Contract to codes and standards in accordance with which the Contract shall be executed, the edition or the revised version of such codes and standards current at the date twenty-eight (28) days prior to date of Tender submission shall apply unless otherwise specified. During Contract execution, any changes in such codes and standards shall be applied subject to approval by the Procuring Entity and shall be treated in accordance with GCC Clause 39.

20.3 Approval/ Review of Technical Documents by Project Manager.

20.3.1 The Contractor shall prepare or cause its Subcontractors to prepare, and furnish to the Project Manager the documents listed in the Appendix to the Contract Agreement titled List of Documents for Approval or Review, for its approval or review as specified and in accordance with the requirements of GCC Sub-Clause 18.2 (Program of Performance).

20.3.2 Any part of the Facilities covered by or related to the documents to be approved by the Project Manager shall be executed only after the Project Manager's approval thereof.

GCC Sub-Clauses 20.3.2 through 20.3.7 shall apply to those documents requiring the Project Manager's approval, but not to those furnished to the Project Manager for its review only.

20.2.3 Within fourteen (14) days after receipt by the Project Manager of any document requiring the Project Manager's approval in accordance with GCC Sub-Clause 20.3.1, the Project Manager shall either return one copy thereof to the Contractor with its approval endorsed there on or shall notify the Contractor in writing of its disapproval thereof and the reasons therefor and the modifications that the Project Manager proposes.
If the Project Manager fails to take such action within the said fourteen (14) days, then the said document shall be deemed to have been approved by the Project Manager.

20.3.4 The Project Manager shall not disapprove any document, except on the grounds that the document does not comply with the Contractor that it is contrary to good engineering practice.

20.3.5 If the Project Manager disapproves the document, the Contractor shall modify the document and resubmit it for the Project Manager's approval in accordance with GCC Sub-Clause 20.3.2. If the Project Manager approves the document subject to modification(s), the Contractor shall make the required modification (s), where upon the document shall be deemed to have been approved.

20.3.6 If any dispute or difference occurs between the Procuring Entity and the Contractor in connection with or arising out of the disapproval by the Project Manager of any document and/or any modification (s) there to that cannot be settled between the Parties within a reasonable period, then such dispute or difference may be

referred to a Dispute Board for determination in accordance with GCC Sub-Clause 46.1 hereof. If such dispute or difference is referred to a Dispute Board, the Project Manager shall give instructions as to whether and if so, how, performance of the Contract is to proceed. The Contractor shall proceed with the Contract in accordance with the Project Manager's instructions, provided that if the Dispute Board upholds the Contractor's view on the dispute and if the Procuring Entity has not given notice under GCC Sub-Clause 46.3 hereof, then the Contractor shall be reimbursed by the Procuring Entity for any additional costs incurred by reason of such instructions and shall be relieved of such responsibility or liability in connection with the dispute and the execution of the instructions as the Dispute Board shall decide, and the Time for Completion shall be extended accordingly.

20.3.7 The Project Manager's approval, with or without modification of the document furnished by the Contractor, shall not relieve the Contractor of any responsibility or liability imposed upon it by any provisions of the Contract except to the extent that any subsequent failure results from modifications required by the Project Manager.

20.3.8 The Contractor shall not depart from any approved document unless the Contractor has first submitted to the Project Manager an amended document and obtained the Project Manager's approval thereof, pursuant to the provisions of this GCC Sub-Clause 20.3.

If the Project Manager requests any change in any already approved document and/or in any document based there on, the provisions of GCC Clause 39 shall apply to such request.

21 Procurement

21.1 Plant

Subject to GCC Sub-Clause 14.2, the Contractor shall procure and transport all Plant in an expeditious and orderly manner to the Site.

21.2 Procuring Entity-Supplied Plant

If the Appendix to the Contract Agreement titled Scope of Works and Supply by the Procuring Entity, provides that the Procuring Entity shall furnish any specific items to the Contractor, the following provisions shall apply:

21.2.1 The Procuring Entity shall, at its own risk and expense, transport each item to the place on or near the Site as agreed upon by the Parties and make such item available to the Contractor at the time specified in the program furnished by the Contractor, pursuant to GCC Sub-Clause18.2, unless otherwise mutually agreed.

21.2.2 Upon receipt of such item, the Contractor shall inspect the same visually and notify the Project Manager of any detected shortage, defect or default. The Procuring Entity shall immediately remedy any shortage, defector default, or the Contractor shall, if practicable and possible, at the request of the Procuring Entity, remedy such shortage, defect or default at the Procuring Entity's cost and expense. After inspection, such item shall fall under the care, custody and control of the Contractor. The provision of this GCC Sub-Clause21.2.2 shall apply to any item supplied to remedy any such shortage or default or to substitute for any defective item, or shall apply to defective items that have been repaired.

21.2.3 The foregoing responsibilities of the Contractor and its obligations of care, custody and control shall not relieve the Procuring Entity of liability for any undetected shortage, defect or default, nor place the Contractor under any liability for any such shortage, defect or default whether under GCC Clause 27 or under any other provision of Contract.

21.3 Transportation

21.3.1 The Contractor shall at its own risk and expense transport all the materials and the Contractor's Equipment to the Site by the mode of transport that the Contractor judges most suitable under all the circumstances.

21.3.2 Unless otherwise provided in the Contract, the Contractor shall be entitled to select any safe mode of transport operated by any person to carry the materials and the Contractor's Equipment.

21.3.3 Upon dispatch of each shipment of materials and the Contractor's Equipment, the Contractor shall notify the Procuring Entity by telex, cable, facsimile or electronic means, of the description of the materials and of the Contractor's Equipment, the point and means of dispatch, and the estimated time and point of arrival in the

Kenya, if applicable, and at the Site. The Contractor shall furnish the Procuring Entity with relevant shipping documents to be agreed upon between the Parties.

21.3.4 The Contractor shall be responsible for obtaining, if necessary, approvals from the authorities for transportation of the materials and the Contractor's Equipment to the Site. The Procuring Entity shall use its best endeavors in a timely and expeditious manner to assist the Contractor in obtaining such approvals, if requested by the Contractor. The Contractor shall indemnify and hold harmless the Procuring Entity from and against any claim for damage to roads, bridges or any other traffic facilities that may be caused by the transport of the materials and the Contractor's Equipment to the Site.

21.4 Customs Clearance

21.4.1 The Contractor shall, at its own expense, handle all imported materials and Contractor's Equipment at the point(s) of import and shall handle any formalities for customs clearance, subject to the Procuring Entity's obligations under GCC Sub-Clause 14.2, provided that if applicable laws or regulations require any application or act to be made by or in the name of the Procuring Entity, the Procuring Entity shall take all necessary steps to comply with such laws or regulations. In the event of delays in customs clearance that are not the fault of the Contractor, the Contractor shall be entitled to an extension in the Time for Completion, pursuant to GCC Clause40.

22 Installation

22.1 Setting Out/ Supervision

22.1.1 Bench Mark: The Contractor shall be responsible for the true and proper setting-out of the Facilities in relation to bench marks, reference marks and lines provided to it in writing by or on behalf of the Procuring Entity.

If, at any time during the progress of installation of the Facilities, any error shall appear in the position, level or alignment of the Facilities, the Contractor shall forth with notify the Project Manager of such error and, at its own expense, immediately rectify such error to the reasonable satisfaction of the Project Manager. If such error is based on incorrect data provided in writing by or on behalf of the Procuring Entity, the expense of rectifying the same shall be borne by the Procuring Entity.

22.1.2 Contractor's Supervision: The Contractor shall give or provide all necessary superintendence during the installation of the Facilities, and the Construction Manager or its deputy shall be constantly on the Site to provide full-time super intendance of the installation. The Contractor shall provide and employ only technical personnel who are skilled and experienced in their respective callings and supervisory staff who are competent to adequately supervise the work at hand.

22.2 Labor:

22.2.1 Engagement of Staff and Labor

Except as otherwise stated in the Specification, the Contractor shall make arrangements for the engagement of all staff and labor, local or otherwise, and for their payment, housing, feeding and transport.

The Contractor shall provide and employ on the Site in the installation of the Facilities such skilled, semi-skilled and unskilled labor as is necessary for the proper and timely execution of the Contract. The Contractor is encouraged to use local labor that has the necessary skills.

The Contractor shall be responsible for obtaining all necessary permit(s) and/or visa(s) from the appropriate authorities for the entry of all labor and personnel to be employed on the Site into Kenya. The Procuring Entity will, if requested by the Contractor, use his best endeavors in a timely and expeditious manner to assist the Contractor in obtaining any local, state, national or government permission required for bringing in the Contractor's personnel.

The Contractor shall at its own expense provide the means of repatriation to all of its and its Subcontractor's personnel employed on the Contract at the Site to the place where they were recruited or to their domicile. It shall also provide suitable temporary maintenance of all such persons from the cessation of their employment on the Contract to the date programmed for their departure. In the event that the Contractor defaults in providing such means of transportation and temporary maintenance, the Procuring Entity may provide the same to such personnel and recover the cost of doing so from the Contractor.

22.2.2 Persons in the Service of Procuring Entity

The Contractor shall not recruit, or attempt to recruit, staff and labor from amongst the Procuring Entity's Personnel.

22.2.3 Labor Laws

The Contractor shall comply with all the relevant labor Laws applicable to the Contractor's Personnel, including Laws relating to their employment, health, safety, welfare, immigration and emigration, and shall allow them all their legal rights.

The Contractor shall at all times during the progress of the Contract use its best endeavors to prevent any unlawful, riotous or disorderly conduct or behavior by or amongst its employees and the labor of its Subcontractors.

The Contractor shall, in all dealings with its labor and the labor of its Subcontractors currently employed on or connected with the Contract, pay due regard to all recognized festivals, official holidays, religious or other customs and all local laws and regulations pertaining to the employment of labor.

22.2.4 Rates of Wages and Conditions of Labor

The Contractor shall pay rates of wages, and observe conditions of labor, which are not lower than those established for the trade or industry where the work is carried out. If no established rates or conditions are applicable, the Contractor shall pay rates of wages and observe conditions which are not lower than the general level of wages and conditions observed locally by Procuring Entities whose trade or industry is similar to that of the Contractor.

The Contractor shall in form the Contractor's Personnel about their liability to pay personal income taxes in the Country in respect of such of their salaries, wages and allowances as are chargeable under the Laws for the time being in force, and the Contractor shall perform such duties in regard to such deductions thereof as may be imposed on him by such Laws.

22.2.5 Working Hours

No work shall be carried out on the Site on locally recognized days of rest, or outside the normal working hours stated in the **SCC**, unless:

a Otherwise stated in the Contract,
b The Project Manager gives consent, or
c The work is unavoidable, or necessary for the protection of life or property or for the safety of the Works, in which case the Contractor shall immediately advise the Project Manager.

If and when the Contractor considers it necessary to carryout work at night or on public holidays so as to meet the Time for Completion and requests the Project Manager's consent thereto, the Project Manager shall not unreasonably withhold such consent.

This Sub-Clause shall not apply to any work which is customarily carried out by rotary or double-shifts.

22.2.6 Facilities for Staff and Labor

Except as otherwise stated in the Specification, the Contractor shall provide and maintain all necessary accommodation and welfare facilities for the Contractor's Personnel. The Contractor shall also provide facilities for the Procuring Entity's Personnel as stated in the Specification.

The Contractor shall not permit any of the Contractor's Personnel to maintain any temporary or permanent living quarters within the structures forming part of the Permanent Works.

22.2.7 Health and Safety

The Contractor shall at all times take all reasonable precautions to maintain the health and safety of the Contractor's Personnel. In collaboration with local health authorities, the Contractor shall ensure that medical staff, first aid facilities, sick bay and ambulance service are available at all times at the Site and at any accommodation for Contractor's and Procuring Entity's Personnel, and that suitable arrangements are made for all necessary welfare and hygiene requirements and for the prevention of epidemics.

The Contractor shall appoint an accident prevention officer at the Site, responsible for maintaining safety and protection against accidents. This person shall be qualified for this responsibility, and shall have the authority to issue instructions and take protective measures to prevent accidents. Throughout the performance of the Contract, the Contractor shall provide whatever is required by this person to exercise this responsibility and authority.

The Contractor shall send to the Project Manager, details of any accident as soon as practicable after its occurrence. The Contractor shall maintain records and make reports concerning health, safety and welfare of persons, and damage to property, as the Project Manager may reasonably require.

The Contractor shall throughout the contract (including the Defects Notification Period): (i) conduct Information, Education and Consultation Communication (IEC) campaigns, at least every other month, addressed to all the Site staff and labor (including all the Contractor's employees, all Subcontractors and Procuring Entity's and Project Manager's' employees, and all truck drivers and crew making deliveries to Site for construction activities) and to the immediate local communities, concerning the risks, dangers and impact, and appropriate avoidance behavior with respect to of Sexually Transmitted Diseases (STD) - or Sexually Transmitted Infections (STI) in general and HIV/AIDS in particular; (ii) provide male or female condoms for all Site staff and labor as appropriate; and (iii) provide for STI and HIV/AIDS screening, diagnosis, counseling and referral to a dedicated national STI and HIV/AIDS program,(unless otherwise agreed) of all Site staff and labor.

The Contractor shall include in the program to be submitted for the execution of the Facilities under Sub-Clause18.2 an alleviation program for Site staff and labor and their families in respect of Sexually Transmitted Infections (STI) and Sexually Transmitted Diseases (STD) including HIV/AIDS. The STI, STD and HIV/AIDS alleviation program shall indicate when, how and at what cost the Contractor plans to satisfy the requirements of this Sub-Clause and the related specification. For each component, the program shall detail the resources to be provided or utilized and any related sub-contracting proposed. The program shall also include provision of a detailed cost estimate with supporting documentation. Payment to the Contractor for preparation and implementation this program shall not exceed the Provisional Sum dedicated for this purpose.

22.2.8 Funeral Arrangements

In the event of the death of any of the Contractor's personnel or accompanying members of their families, the Contractor shall be responsible for making the appropriate arrangements for their return or burial, unless otherwise specified in the **SCC**.

22.2.9 Records of Contractor's Personnel

The Contractor shall keep accurate records of the Contractor's personnel, including the number of each class of Contractor's Personnel on the Site and the names, ages, genders, hours worked and wages paid to all workers. These records shall be summarized on a monthly basis in a form approved by the Project Manager and shall be available for inspection by the Project Manager until the Contractor has completed all work.

22.2.10 Supply of Food stuffs

The Contractor shall arrange for the provision of a sufficient supply of suitable food as may be stated in the Specification at reasonable prices for the Contractor's Personnel for the purposes of or in connection with the Contract.

22.2.11 Supply of Water

The Contractor shall, having regard to local conditions, provide on the Site an adequate supply of drinking and other water for the use of the Contractor's Personnel.

22.2.12 Measures against Insect and Pest Nuisance

The Contractor shall at all times take the necessary precautions to protect the Contractor's Personnel employed on the Site from insect and pest nuisance, and to reduce their danger to health. The Contractor shall comply with all the regulations of the local health authorities, including use of appropriate insecticide.

22.2.13 Alcoholic Liquor or Drugs

The Contractor shall not, otherwise than in accordance with the Laws of Kenya, import, sell, give barter or otherwise dispose of any alcoholic liquor or drugs, or permit or allow importation, sale, gift barter or disposal by Contractor's Personnel.

22.2.14 Arms and Ammunition

The Contractor shall not give, barter, or otherwise dispose of, to any person, any arms or ammunition of any kind, or allow Contractor's Personnel to do so.

22.2.15 Prohibition of All Forms of Forced or Compulsory Labor

The contractor shall not employ “forced or compulsory labor” in any form. “Forced or compulsory labor” consists of all work or service, not voluntarily performed, that is extracted from an individual under threat of force or penalty.

22.2.16 Prohibition of Harmful Child Labor

The Contractor shall not employ any child to perform any work that is economically exploitative, or is likely to be hazardous to, or to interfere with, the child's education, or to be harmful to the child's health or physical, mental, spiritual, moral, or social development.

22.3 Contractor's Equipment

22.3.1 All Contractor's Equipment brought by the Contractor on to the Site shall be deemed to be intended to be used exclusively for the execution of the Contract. The Contractor shall not remove the same from the Site without the Project Manager's consent that such Contractor's Equipment is no longer required for the execution of the Contract.

22.3.2 Unless otherwise specified in the Contract, upon completion of the Facilities, the Contractor shall remove from the Site all Equipment brought by the Contractor on to the Site and any surplus materials remaining there on.

22.3.3 The Procuring Entity will, if requested, use its best endeavors to assist the Contractor in obtaining any local, state or national government permission required by the Contractor for the export of the Contractor's Equipment imported by the Contractor for use in the execution of the Contract that is no longer required for the execution of the Contract.

22.4 Site Regulations and Safety

The Procuring Entity and the Contractor shall establish Site regulations setting out the rules to be observed in the execution of the Contract at the Site and shall comply there with. The Contractor shall prepare and submit to the Procuring Entity, with a copy to the Project Manager, proposed Site regulations for the Procuring Entity's approval, which approval shall not be unreasonably withheld.

Such Site regulations shall include, but shall not be limited to, rules in respect of security, safety of the Facilities, gate control, sanitation, medical care, and fire prevention.

22.5 Opportunities for Other Contractors

22.5.1 The Contractor shall, upon written request from the Procuring Entity or the Project Manager, give all reasonable opportunities for carrying out the work to any other contractors employed by the Procuring Entity on or near the Site.

22.5.2 If the Contractor, upon written request from the Procuring Entity or the Project Manager, makes available to other contractors any roads or ways the maintenance for which the Contractor is responsible, permits the use by such other contractors of the Contractor's Equipment, or provides any other service of whatsoever nature for such other contractors, the Procuring Entity shall fully compensate the Contractor for any loss or damage caused or occasioned by such other contractors in respect of any such use or service, and shall pay to the Contractor reasonable remuneration for the use of such equipment or the provision of such services.

22.5.3 The Contractor shall also so arrange to perform its work as to minimize, to the extent possible, interference with the work of other contractors. The Project Manager shall determine the resolution of any difference or conflict that may arise between the Contractor and other contractors and the workers of the Procuring Entity in regard to their work.

22.5.4 The Contractor shall notify the Project Manager promptly of any defects in the other contractors' work that come to its notice, and that could affect the Contractor's work. The Project Manager shall determine the corrective measures, if any, required to rectify the situation after inspection of the Facilities. Decisions made by the Project Manager shall be binding on the Contractor.

22.6 Emergency Work

If, by reason of an emergency arising in connection with and during the execution of the Contract, any protective or remedial work is necessary as a matter of urgency to prevent damage to the Facilities, the Contractor shall immediately carry out such work.

If the Contractor is unable or unwilling to do such work immediately, the Procuring Entity may door cause such work to be done as the Procuring Entity may determine is necessary in order to prevent damage to the Facilities. In such event the Procuring Entity shall, as soon as practicable after the occurrence of any such emergency, notify the Contractor in writing of such emergency, the work done and the reasons there for. If the work done or caused to be done by the Procuring Entity is work that the Contractor was liable to do at its own expense under the Contract, the reasonable costs incurred by the Procuring Entity in connection there with shall be paid by the Contractor to the Procuring Entity. Otherwise, the cost of such remedial work shall be borne by the Procuring Entity.

22.7 Site Clearance

22.7.1 Site Clearance in Course of Performance: In the course of carrying out the Contract, the Contractor shall keep the Site reasonably free from all unnecessary obstruction, store or remove any surplus materials, clear away any wreckage, rubbish or temporary works from the Site, and remove any Contractor's Equipment no longer required for execution of the Contract.

22.7.2 Clearance of Site after Completion: After Completion of all parts of the Facilities, the Contractor shall clear away and remove all wreckage, rubbish and debris of any kind from the Site, and shall leave the Site and Facilities in a clean and safe condition.

22.8 Watching and Lighting

The Contractor shall provide and maintain at its own expense all lighting, fencing, and watching when and Where necessary for the proper execution and the protection of the Facilities, or for the safety of the owners and occupiers of adjacent property and for the safety of the public.

23 Test and Inspection

23.1 The Contractor shall at its own expense carryout at the place of manufacture and/or on the Site all such tests and/ or inspections of the Plant and any part of the Facilities as are specified in the Contract.

23.2 The Procuring Entity and the Project Manager or their designated representatives shall be entitled to attend the afore said test and/ or inspection, provided that the Procuring Entity shall bear all costs and expenses incurred in connection with such attendance including, but not limited to, all traveling and board and lodging expenses.

23.3 Whenever the Contractor is ready to carry out any such test and/or inspection, the Contractor shall give a reasonable advance notice of such test and/or inspection and of the place and time thereof to the Project Manager.TheContractorshallobtainfromanyrelevantthirdPartyormanufactureranynecessarypermission or consent to enable the Procuring Entity and the Project Manager or their designated representatives to attend the test and/ or inspection.

23.4 The Contractor shall provide the Project Manager with a certified report of the results of any such test and/ or inspection. If the Procuring Entity or Project Manager or their designated representatives fails to attend the test and/or inspection, or if it is agreed between the Parties that such persons shall not do so, then the Contractor may proceed with the test and/ or inspection in the absence of such persons, and may provide the Project Manager with a certified report of the results thereof.

23.5 The Project Manager may require the Contractor to carry out any test and/or inspection not required by the Contract, provided that the Contractor's reasonable costs and expenses incurred in the carrying out of such test and/or inspection shall be added to the Contract Price. Further, if such test and/or inspection impede the progress of work on the Facilities and/or the Contractor's performance of its other obligations under the Contract, due allowance will be made in respect of the Time for Completion and the other obligations so affected.

23.6 If any Plant or any part of the Facilities fails to pass any test and/ or inspection, the Contractor shall either rectify or replace such Plant or part of the Facilities and shall repeat the test and/or inspection upon giving a notice under GCC Sub-Clause 23.3.

23.7 If any dispute or difference of opinion shall arise between the Parties in connection with or arising out of the test and/or inspection of the Plant or part of the Facilities that cannot be settled between the Parties within a

reasonable period of time, it may be referred to a Dispute Board for determination in accordance with GCC Sub-Clause 46.3.

23.8 The Contractor shall afford the Procuring Entity and the Project Manager, at the Procuring Entity's expense, access at any reasonable time to any place where the Plant are being manufactured or the Facilities are being installed, in order to inspect the progress and the manner of manufacture or installation, provided that the Project Manager shall give the Contractor a reasonable prior notice.

23.9 The Contractor agrees that neither the execution of a test and/ or inspection of Plant or any part of the Facilities, nor the attendance by the Procuring Entity or the Project Manager, nor the issue of any test certificate pursuant to GCC Sub-Clause 23.4, shall release the Contractor from any other responsibilities under the Contract.

23.10 No part of the Facilities or foundations shall be covered upon the Site without the Contractor carrying out any test and/or inspection required under the Contract. The Contractor shall give a reasonable notice to the Project Manager whenever any such parts of the Facilities or foundations are ready or about to be ready for test and/or inspection; such test and/or inspection and notice there of shall be subject to the requirements of the Contract.

23.11 The Contractor shall uncover any part of the Facilities or foundations, or shall make openings in or through the same as the Project Manager may from time to time require at the Site, and shall reinstate and make good such part or parts.

If any parts of the Facilities or foundations have been covered up at the Site after compliance with the requirement of GCC Sub-Clause 23.10 and are found to be executed in accordance with the Contract, the expenses of uncovering, making openings in or through, reinstating, and making good the same shall be borne by the Procuring Entity, and the Time for Completion shall be reasonably adjusted to the extent that the contractor has thereby been delayed or impeded in the performance of any of its obligations under the Contract.

24 Completion of the Facilities

24.1 As soon as the Facilities or any part thereof has, in the opinion of the Contractor, been completed operationally and structurally and put in a tight and clean condition as specified in the Procuring Entity's Requirements, excluding minor items not materially affecting the operation or safety of the Facilities, the Contractor shall so notify the Procuring Entity in writing.

24.2 Within seven (7) days after receipt of the notice from the Contractor under GCC Sub-Clause 24.1, the Procuring Entity shall supply the operating and maintenance personnel specified in the Appendix to the Contract Agreement titled Scope of Works and Supply by the Procuring Entity for Pre-commissioning of the Facilities or any part thereof.

24.3 Pursuant to the Appendix to the Contract Agreement titled Scope of Works and Supply by the Procuring Entity, the Procuring Entity shall also provide, within the said seven (7) day period, the raw materials, utilities, lubricants, chemicals, catalysts, facilities, services and other matters required for Pre-commissioning of the Facilities or any part thereof.

24.4 As soon as reasonably practicable after the operating and maintenance personnel have been supplied by the Procuring Entity and the raw materials, utilities, lubricants, chemicals, catalysts, facilities, services and other matters have been provided by the Procuring Entity in accordance with GCC Sub-Clause24.2, the Contractor shall commence Pre-commissioning of the Facilities or the relevant part thereof in preparation for Commissioning, subject to GCC Sub-Clause 25.5.

24.5 As soon as all works in respect of Pre-commissioning are completed and, in the opinion of the Contractor, the Facilities or any part thereof is ready for Commissioning, the Contractor shall so notify the Project Manager in writing.

24.6 The Project Manager shall, within fourteen (14) days after receipt of the Contractor's notice under GCC Sub-Clause24.4, either issue a Completion Certificate in the form specified in the Procuring Entity's Requirements (Forms and Procedures), stating that the Facilities or that part thereof have reached Completion as of the date of the Contractor's notice under GCC Sub-Clause 24.4, or notify the Contractor in writing of any defects and/or deficiencies.

If the Project Manager notifies the Contractor of any defects and/or deficiencies, the Contractor shall then correct such defects and/or deficiencies, and shall repeat the procedure described in GCC Sub-Clause 24.4.

If the Project Manager is satisfied that the Facilities or that part thereof have reached Completion, the Project Manager shall, within seven (7) days after receipt of the Contractor's repeated notice, issue a Completion

Certificate stating that the Facilities or that part thereof have reached Completion as of the date of the Contractor's repeated notice.

If the Project Manager is not so satisfied, then it shall notify the Contractor in writing of any defects and/or deficiencies within seven (7) days after receipt of the Contractor's repeated notice, and the above procedure shall be repeated.

24.7 If the Project Manager fails to issue the Completion Certificate and fails to inform the Contractor of any defects and/or deficiencies within fourteen (14) days after receipt of the Contractor's notice under GCC Sub-Clause 24.4 or within seven (7) days after receipt of the Contractor's repeated notice under GCC Sub-Clause 24.5, or if the Procuring Entity makes use of the Facilities or part thereof, then the Facilities or that part there of shall be deemed to have reached Completion as of the date of the Contractor's notice or repeated notice, or as of the Procuring Entity's use of the Facilities, as the case may be.

24.8 As soon as possible after Completion, the Contractor shall complete all outstanding minor items so that the Facilities are fully in accordance with the requirements of the Contract, failing which the Procuring Entity will undertake such completion and deduct the costs there of from any monies owing to the Contractor.

24.9 Upon Completion, the Procuring Entity shall be responsible for the care and custody of the Facilities or the relevant part thereof, together with the risk of loss or damage thereto, and shall thereafter take over the Facilities or the relevant part thereof.

25 Commissioning and Operational Acceptance

25.1 Commissioning

25.1.1 Commissioning of the Facilities or any part there of shall be commenced by the Contractor immediately after issue of the Completion Certificate by the Project Manager, pursuant to GCC Sub-Clause24.5, or immediately after the date of the deemed Completion, under GCC Sub-Clause 24.6.

25.1.2 The Procuring Entity shall supply the operating and maintenance personnel and all raw materials, utilities, lubricants, chemicals, catalysts, facilities, services and other matters required for Commissioning.

25.1.3 In accordance with the requirements of the Contract, the Contractor's and Project Manager's advisory personnel shall attend the Commissioning, including the Guarantee Test, and shall advise and assist the Procuring Entity.

25.2 Guarantee Test

25.2 Subject to GCC Sub-Clause 25.5, the Guarantee Test and repeats there of shall be conducted by the Contractor during Commissioning of the Facilities or the relevant part thereof to ascertain whether the Facilities or the relevant part can attain the Functional Guarantees specified in the Appendix to the Contract Agreement titled Functional Guarantees. The Procuring Entity shall promptly provide the Contractor with such information as the Contractor may reasonably require in relation to the conduct and results of the Guarantee Test and any repeats thereof.

25.1.1 If for reasons not attributable to the Contractor, the Guarantee Test of the Facilities or the relevant part thereof cannot be successfully completed within the period from the date of Completion specified in the **SCC** or any other period agreed upon by the Procuring Entity and the Contractor, the Contractor shall be deemed to have fulfilled its obligations with respect to the Functional Guarantees, and GCC Sub-Clauses 28.2 and 28.3 shall not apply.

25.3 Operational Acceptance

25.3.1 Subject to GCC Sub-Clause 25.4 below, Operational Acceptance shall occur in respect of the Facilities or any part thereof when

a The Guarantee Test has been successfully completed and the Functional Guarantees are met; or

b the Guarantee Test has not been successfully completed or has not been carried out for reasons not attributable to the Contractor within the period from the date of Completion specified in the **SCC** pursuant to GCC Sub-Clause 25.2.2 above or any other period agreed upon by the Procuring Entity and the Contractor; or

c the Contractor has paid the liquidated damages specified in GCC Sub-Clause 28.3hereof; and

d any minor items mentioned in GCC Sub-Clause 24.7 here of relevant to the Facilities or that part thereof have been completed.

25.3.2 At any time after any of the events set out in GCC Sub-Clause 25.3.1 have occurred, the Contractor may give a notice to the Project Manager requesting the issue of an Operational Acceptance Certificate in the form

provided in the Procuring Entity's Requirements (Forms and Procedures) in respect of the Facilities or the part there of specified in such notice as of the date of such notice.

25.3.3 The Project Manager shall, after consultation with the Procuring Entity, and within seven (7) days after receipt of the Contractor's notice, issue an Operational Acceptance Certificate.

25.3.4 If within seven (7) days after receipt of the Contractor's notice, the Project Manager fails to issue the Operational Acceptance Certificate or fails to inform the Contractor in writing of the justifiable reasons why the Project Manager has not issued the Operational Acceptance Certificate, the Facilities or the relevant part there of shall be deemed to have been accepted as of the date of the Contractor's said notice.

25.4 Partial Acceptance

25.4.1 If the Contract specifies that Completion and Commissioning shall be carried out in respect of parts of the Facilities, the provisions relating to Completion and Commissioning including the Guarantee Test shall apply to each such part of the Facilities individually, and the Operational Acceptance Certificate shall be issued accordingly for each such part of the Facilities.

25.4.2 If a part of the Facilities comprises facilities such as buildings, for which no Commissioning or Guarantee Test is required, then the Project Manager shall issue the Operational Acceptance Certificate for such facility when it attains Completion, provided that the Contractor shall there after complete any outstanding minor items that are listed in the Operational Acceptance Certificate.

25.5 Delayed Pre-commissioning and/or Guarantee Test

25.5.1 In the event that the Contractor is unable to proceed with the Pre-commissioning of the Facilities pursuant to Sub-Clause 24.3, or with the Guarantee Test pursuant to Sub-Clause 25.2, for reasons attributable to the Procuring Entity either on account of non-availability of other facilities under the responsibilities of other contractor(s), or for reasons beyond the Contractor's control, the provisions leading to “deemed” completion of activities such as Completion, pursuant to GCC Sub-Clause 24.6, and Operational Acceptance, pursuant to GCC Sub-Clause 25.3.4, and Contractor's obligations regarding Defect Liability Period, pursuant to GCC Sub- Clause 27.2, Functional Guarantee, pursuant to GCC Clause 28, and Care of Facilities, pursuant to GCC Clause 32 ,and GCC Clause 41.1, Suspension, shall not apply. In this case, the following provisions shall apply.

25.5.2 When the Contractor is notified by the Project Manager that he will be unable to proceed with the activities and obligations pursuant to above Sub-Clause 25.5.1, the Contractor shall be entitled to the following:

a The Time of Completion shall be extended for the period of suspension without imposition of liquidated damages pursuant to GCC Sub-Clause 26.2;

b payments due to the Contractor in accordance with the provision specified in the Appendix to the Contract Agreement titled Terms and Procedures of Payment, which would not have been payable in normal circumstances due to non-completion of the subject activities, shall be released to the Contractor against submission of a security in the form of a bank guarantee of equivalent amount acceptable to the Procuring Entity, and which shall become null and void when the Contractor will have complied with its obligations regarding those payments, subject to the provision of Sub-Clause 25.5.3 below;

c the expenses towards the above security and extension of other securities under the contract, of which validity needs to be extended, shall be reimbursed to the Contractor by the Procuring Entity;

d the additional charges towards the care of the Facilities pursuant to GCC Sub-Clause 32.1 shall be reimbursed to the Contractor by the Procuring Entity for the period between the notification mentioned above and the notification mentioned in Sub-Clause 25.5.4 below. The provision of GCC Sub-Clause 33.2 shall apply to the Facilities during the same period.

e Where the contract price is different from the corrected tender price, in order to ensure the contractor is not paid less or more relative to the contract price (which would be the tender price), payment valuation certificates and variation orders on omissions and additions valued based on rates in the Bill of Quantities or schedule of rates in the Tender, will be adjusted by a plus or minus percentage. The percentage already worked out during tender evaluation is worked out as follows: (corrected tender price –tender price)/ tender price X100.

25.5.3 In the event that the period of suspension under above Sub-Clause 25.5.1 actually exceeds one hundred eighty (180) days, the Procuring Entity and Contractor shall mutually agree to any additional compensation payable to the Contractor.

25.5.4 When the Contractor is notified by the Project Manager that the plant is ready for Pre-commissioning, the Contractor shall proceed without delay in performing Pre-commissioning in accordance with Clause 24.

A. Guarantees and Liabilities

26 Completion Time Guarantee

26.1 The Contractor guarantees that it shall attain Completion of the Facilities (or a part for which a separate time for completion is specified) within the Time for Completion specified in the **SCC** pursuant to GCC Sub-Clause 8.2, or within such extended time to which the Contractor shall be entitled under GCC Clause 40 hereof.

26.2 If the Contractor fails to attain Completion of the Facilities or any part thereof within the Time for Completion or any extension thereof under GCC Clause 40, the Contractor shall pay to the Procuring Entity liquidated damages in the amount specified in the **SCC** as a percentage rate of the Contract Price or the relevant part thereof. The aggregate amount of such liquidated damages shall in no event exceed the amount specified as "Maximum" in the **SCC** as a percentage rate of the Contract Price. Once the "Maximum" is reached, the Procuring Entity may consider termination of the Contract, pursuant to GCC Sub-Clause 42.2.2.

26.3 Such payment shall completely satisfy the Contractor's obligation to attain Completion of the Facilities or the relevant part thereof within the Time for Completion or any extension thereof under GCC Clause 40. The Contractor shall have no further liability whatsoever to the Procuring Entity in respect thereof.

26.4 However, the payment of liquidated damages shall not in any way relieve the Contractor from any of its obligations to complete the Facilities or from any other obligations and liabilities of the Contractor under the Contract.

26.5 Save for liquidated damages payable under this GCC Sub-Clause 26.2, the failure by the Contractor to attain any milestone or other act, matter or thing by any date specified in the Appendix to the Contract Agreement titled Time Schedule, and/or other program of work prepared pursuant to GCC Sub-Clause 18.2 shall not render the Contractor liable for any loss or damage there by suffered by the Procuring Entity.

26.6 If the Contractor attains Completion of the Facilities or any part there of before the Time for Completion or any extension thereof under GCC Clause 40, the Procuring Entity shall pay to the Contractor a bonus in the amount specified in the **SCC**. The aggregate amount of such bonus shall in no event exceed the amount specified as "Maximum" in the **SCC**.

27 Defect Liability

27.1 The Contractor warrants that the Facilities or any part thereof shall be free from defects in the design, engineering, materials and workmanship of the Plant supplied and of the work executed.

27.2 The Defect Liability Period shall be five hundred and forty (540) days from the date of Completion of the Facilities (or any part thereof) or one year from the date of Operational Acceptance of the Facilities (or any part thereof), whichever first occurs, unless specified otherwise in the **SCC** pursuant to GCC Sub-Clause 27.10.

If during the Defect Liability Period any defect should be found in the design, engineering, materials and workmanship of the Plant supplied or of the work executed by the Contractor, the Contractor shall promptly, in consultation and agreement with the Procuring Entity regarding appropriate remedying of the defects, and at its cost, repair, replace or otherwise make good as the Contractor shall determine at its discretion, such defect as well as any damage to the Facilities caused by such defect. The Contractor shall not be responsible for the repair, replacement or making good of any defector of any damage to the Facilities arising out of or resulting from any of the following causes:

a Improper operation or maintenance of the Facilities by the Procuring Entity;
b Operation of the Facilities outside specifications provided in the Contract; or
c Normal wear and tear.

27.3 The Contractor's obligations under this GCC Clause 27 shall not apply to:

a any materials that are supplied by the Procuring Entity under GCC Sub-Clause 21.2, are normally consumed in operation, or have a normal life shorter than the Defect Liability Period stated herein;
b any designs, specifications or other data designed, supplied or specified by or on behalf of the Procuring Entity or any matters for which the Contractor has disclaimed responsibility herein; or

c any other materials supplied or any other work executed by or on behalf of the Procuring Entity, except for the work executed by the Procuring Entity under GCC Sub-Clause 27.7.

27.4 The Procuring Entity shall give the Contractor a notice stating the nature of any such defect together with all available evidence thereof, promptly following the discovery thereof. The Procuring Entity shall afford all reasonable opportunity for the Contractor to inspect any such defect.

27.5 The Procuring Entity shall afford the Contractor all necessary access to the Facilities and the Site to enable the Contractor to perform its obligations under this GCC Clause 27.

The Contractor may, with the consent of the Procuring Entity, remove from the Site any Plant or any part of the Facilities that are defective if the nature of the defect, and/or any damage to the Facilities caused by the defect, is such that repairs cannot be expeditiously carried out at the Site.

27.6 If the repair, replacement or making good is of such a character that it may affect the efficiency of the Facilities or any part thereof, the Procuring Entity may give to the Contractor a notice requiring that tests of the defective part of the Facilities shall be made by the Contractor immediately upon completion of such remedial work, where upon the Contractor shall carryout such tests.

27.7 If such part fails the tests, the Contractor shall carryout further repair, replacement or making good, as the case may be, until that part of the Facilities passes such tests. The tests shall be agreed upon by the Procuring Entity and the Contractor.

27.8 If the Contractor fails to commence the work necessary to remedy such defector any damage to the Facilities caused by such defect within a reasonable time (which shall in no event be considered to be less than fifteen (15) days), the Procuring Entity may, following notice to the Contractor, proceed to do such work, and the reasonable costs incurred by the Procuring Entity in connection there with shall be paid to the Procuring Entity by the Contractor or may be deducted by the Procuring Entity from any monies due the Contractor or claimed under the Performance Security.

27.9 If the Facilities or any part thereof cannot be used by reason of such defect and/or making good of such defect, the Defect Liability Period of the Facilities or such part, as the case may be, shall be extended by a period equal to the period during which the Facilities or such part cannot be used by the Procuring Entity because of any of the aforesaid reasons.

27.10 Except as provided in GCC Clauses 27 and 33, the Contractor shall be under no liability whatsoever and how so ever arising, and whether under the Contractor at law, in respect of defects in the Facilities or any part thereof, the Plant, design or engineering or work executed that appear after Completion of the Facilities or any part thereof, except where such defects are the result of the gross negligence, fraud, or criminal or willful action of the Contractor.

27.11 In addition, any such component of the Facilities, and during the period of time as may be specified in the **SCC**, shall be subject to an extended defect liability period. Such obligation of the Contractor shall be in addition to the defect liability period specified under GCC Sub-Clause 27.2.

28 Functional Guarantees

28.1 The Contractor guarantees that during the Guarantee Test, the Facilities and all parts thereof shall attain the Functional Guarantees specified in the Appendix to the Contract Agreement titled Functional Guarantees, subject to and upon the conditions therein specified.

28.2 If, for reasons attributable to the Contractor, the minimum level of the Functional Guarantees specified in the Appendix to the Contract Agreement titled Functional Guarantees, are not met either in whole or in part, the Contractor shall at its cost and expense make such changes, modifications and/ or additions to the Plant or any part there of as may be necessary to meet at least the minimum level of such Guarantees. The Contractor shall notify the Procuring Entity upon completion of the necessary changes, modifications and/or additions, and shall request the Procuring Entity to repeat the Guarantee Test until the minimum level of the Guarantees has been met. If the Contractor eventually fails to meet the minimum level of Functional Guarantees, the Procuring Entity may consider termination of the Contract, pursuant to GCC Sub-Clause 42.2.2.

28.3 If, for reasons attributable to the Contractor, the Functional Guarantees specified in the Appendix to the Contract Agreement titled Functional Guarantees, are not attained either in whole or in part, but the minimum level of the Functional Guarantees specified in the said Appendix to the Contract Agreement is met, the Contractor shall, at the Contractor's option, either

a Make such changes, modifications and/or additions to the Facilities or any part there of that are necessary

to attain the Functional Guarantees at its cost and expense, and shall request the Procuring Entity to repeat the Guarantee Test or

b Pay liquidated damages to the Procuring Entity in respect of the failure to meet the Functional Guarantees in accordance with the provisions in the Appendix to the Contract Agreement titled Functional Guarantees.

c The payment of liquidated damages under GCC Sub-Clause 28.3, up to the limitation of liability specified in the Appendix to the Contract Agreement titled Functional Guarantees, shall completely satisfy the Contractor's guarantees under GCC Sub-Clause 28.3, and the Contractor shall have no further liability whatsoever to the Procuring Entity in respect thereof. Upon the payment of such liquidated damages by the Contractor, the Project Manager shall issue the Operational Acceptance Certificate for the Facilities or any part thereof in respect of which the liquidated damages have been so paid.

29 Patent Indemnity

29.1 The Contractor shall, subject to the Procuring Entity's compliance with GCC Sub-Clause 29.2, indemnify and hold harmless the Procuring Entity and its employees and officers from and against any and all suits, actions or administrative proceedings, claims, demands, losses, damages, costs, and expenses of whatsoever nature, including attorney's fees and expenses, which the Procuring Entity may suffer as a result of any infringement or alleged infringement of any patent, utility model, registered design, trademark, copy right or other intellectual property right registered or otherwise existing at the date of the Contract by reason of: (a) the installation of the Facilities by the Contractor or the use of the Facilities in Kenya; and (b) the sale of the products produced by the Facilities in any country.

29.2 Such indemnity shall not cover any use of the Facilities or any part thereof other than for the purpose indicated by or to be reasonably inferred from the Contract, any infringement resulting from the use of the Facilities or any part thereof, or any products produced thereby in association or combination with any other equipment, plant or materials not supplied by the Contractor, pursuant to the Contract Agreement.

29.3 If any proceedings are brought or any claim is made against the Procuring Entity arising out of the matters referred to in GCC Sub-Clause 29.1, the Procuring Entity shall promptly give the Contractor a notice thereof, and the Contractor may at its own expense and in the Procuring Entity's name conduct such proceedings or claim and any negotiations for the settlement of any such proceedings or claim.

29.4 If the Contractor fails to notify the Procuring Entity within twenty-eight (28) days after receipt of such notice that it intends to conduct any such proceedings or claim, then the Procuring Entity shall be free to conduct the same on its own behalf. Unless the Contractor has so failed to notify the Procuring Entity within the twenty- eight (28) day period, the Procuring Entity shall make no admission that may be prejudicial to the defense of any such proceedings or claim.

29.5 The Procuring Entity shall, at the Contractor's request, afford all available assistance to the Contractor in conducting such proceedings or claim, and shall be reimbursed by the Contractor for all reasonable expenses incurred in so doing.

29.6 The Procuring Entity shall indemnify and hold harmless the Contractor and its employees, officers and Subcontractors from and against any and all suits, actions or administrative proceedings, claims, demands, losses, damages, costs, and expenses of whatsoever nature, including attorney's fees and expenses, which the Contractor may suffer as a result of any infringement or alleged infringement of any patent, utility model, registered design, trademark, copyright or other intellectual property right registered or otherwise existing at the date of the Contract arising out of or in connection with any design, data, drawing, specification, or other documents or materials provided or designed by or on behalf of the Procuring Entity.

30 Limitation of Liability

30.1 Except in cases of criminal negligence or willful misconduct,

a) Neither Party shall be liable to the other Party, whether in contract, tort, or otherwise, for any in director consequential loss or damage, loss of use, loss of production, or loss of profits or interest costs, which may be suffered by the other Party in connection with the Contract, other than specifically provided as any obligation of the Party in the Contract, and

b) the aggregate liability of the Contractor to the Procuring Entity, whether under the Contract, in tort or otherwise, shall not exceed the amount resulting from the application of the multiplier specified in the **SCC**, to the Contract Price or, if a multiplier is not so specified, the total Contract Price, provided that

this limitation shall not apply to the cost of repairing or replacing defective equipment, or to any obligation of the Contractor to indemnify the Procuring Entity with respect to patent infringement.

B. Risk Distribution

31 Transfer of Ownership

31.1 Ownership of the Plant (including spare parts) to be imported in to Kenya shall be transferred to the Procuring Entity upon loading on to the mode of transport to be used to convey the Plant from the country of origin to that country.

31.2 Ownership of the Plant (including spare parts) procured in Kenya shall be transferred to the Procuring Entity when the Plant are brought on to the Site.

31.3 Ownership of the Contractor's Equipment used by the Contractor and its Subcontractors in connection with the Contract shall remain with the Contractor or its Subcontractors.

31.4 Ownership of any Plant in excess of the requirements for the Facilities shall revert to the Contractor upon Completion of the Facilities or at such earlier time when the Procuring Entity and the Contractor agree that the Plant in question are no longer required for the Facilities.

31.5 Notwithstanding the transfer of ownership of the Plant, the responsibility for care and custody thereof together with the risk of loss or damage there to shall remain with the Contractor pursuant to GCC Clause 32 (Care of Facilities) hereof until Completion of the Facilities or the part there of in which such Plant are incorporated.

32 Care of Facilities

32.1 The Contractor shall be responsible for the care and custody of the Facilities or any part thereof until the date of Completion of the Facilities pursuant to GCC Clause 24 or, where the Contract provides for Completion of the Facilities in parts, until the date of Completion of the relevant part, and shall make good at its own cost any loss or damage that may occur to the Facilities or the relevant part thereof from any cause whatsoever during such period. The Contractor shall also be responsible for any loss or damage to the Facilities caused by the Contractor or its Subcontractors in the course of any work carried out, pursuant to GCC Clause 27. Notwithstanding the foregoing, the Contractor shall not be liable for any loss or damage to the Facilities or that part thereof caused by reason of any of the matters specified or referred to in paragraphs (a), (b) and (c) of GCC Sub-Clauses 32.2 and 38.1.

32.2 If any loss or damage occurs to the Facilities or any part, thereof or to the Contractor's temporary facilities by reason of

a insofar as they relate to Kenya, nuclear reaction, nuclear radiation, radioactive contamination, pressure wave caused by aircraft or other aerial objects, or any other occurrences that an experienced contract or could not reasonably foresee, or if reasonably foreseeable could not reasonably make provision for or insure against, in so far as such risks are not normally insurable on the insurance market and are mentioned in the general exclusions of the policy of insurance, including War Risks and Political Risks, taken out under GCC Clause 34 hereof; or

b any use or occupation by the Procuring Entity or any third Party other than a Subcontractor, authorized by the Procuring Entity of any part of the Facilities; or

c any use of or reliance upon any design, data or specification provided or designated by or on behalf of the Procuring Entity, or any such matter for which the Contractor has disclaimed responsibility herein, the Procuring Entity shall pay to the Contractor all sums payable in respect of the Facilities executed, notwithstanding that the same be lost, destroyed or damaged, and will pay to the Contractor the replacement value of all temporary facilities and all parts thereof lost, destroyed or damaged. If the Procuring Entity requests the Contractor in writing to make good any loss or damage to the Facilities thereby occasioned, the Contractor shall make good the same at the cost of the Procuring Entity in accordance with GCC Clause 39. If the Procuring Entity does not request the Contractor in writing to make good any loss or damage to the Facilities thereby occasioned, the Procuring Entity shall either request a change in accordance with GCC Clause 39, excluding the performance of that part of the Facilities there by lost, destroyed or damaged, or, where the loss or damage affects a substantial part of the Facilities, the Procuring Entity shall terminate the Contract pursuant to GCC Sub-Clause 42.1 hereof.

32.3 The Contractor shall be liable for any loss of or damage to any Contractor's Equipment, or any other property of the Contractor used or intended to be used for purposes of the Facilities, except (i) as mentioned in GCC Sub-Clause 32.2 with respect to the Contractor's temporary facilities, and (ii) where such loss or damage arises by reason of any of the matters specified in GCC Sub-Clauses 32.2 (b) and (c) and 38.1.

32.4 With respect to any loss or damage caused to the Facilities or any part thereof or to the Contractor's Equipment by reason of any of the matters specified in GCC Sub-Clause 38.1, the provisions of GCC Sub-Clause 38.3 shall apply.

33 Loss of or Damage to Property; Accident or Injury to Workers; Indemnification

33.1 Subject to GCC Sub-Clause 33.3, the Contractor shall indemnify and hold harmless the Procuring Entity and its employees and officers from and against any and all suits, actions or administrative proceedings, claims, demands, losses, damages, costs, and expenses of whatsoever nature, including attorney's fees and expenses, in respect of the death or injury of any person or loss of or damage to any property other than the Facilities whether accepted or not, arising in connection with the supply and installation of the Facilities and by reason of the negligence of the Contractor or its Subcontractors, or their employees, officers or agents, except any injury, death or property damage caused by the negligence of the Procuring Entity, its contractors, employees, officers or agents.

33.2 If any proceedings are brought or any claim is made against the Procuring Entity that might subject the Contractor to liability under GCC Sub-Clause33.1, the Procuring Entity shall promptly give the Contractor a notice thereof and the Contractor may at its own expense and in the Procuring Entity's name conduct such proceedings or claim and any negotiations for the settlement of any such proceedings or claim.

33.8 If the Contractor fails to notify the Procuring Entity within twenty-eight (28) days after receipt of such notice that it intends to conduct any such proceedings or claim, then the Procuring Entity shall be free to conduct the same on its own behalf. Unless the Contractor has so failed to notify the Procuring Entity within the twenty- eight (28) day period, the Procuring Entity shall make no admission that may be prejudicial to the defense of any such proceedings or claim.

33.9 The Procuring Entity shall, at the Contractor's request, afford all available assistance to the Contractor in conducting such proceedings or claim, and shall be reimbursed by the Contractor for all reasonable expenses incurred in so doing.

33.10 `The Procuring Entity shall indemnify and hold harmless the Contractor and its employees, officers and Subcontractors from any liability for loss of or damage to property of the Procuring Entity, other than the Facilities not yet taken over, that is caused by fire, explosion or any other perils, in excess of the amount recoverable from insurances procured under GCC Clause 34, provided that such fire, explosion or other perils were not caused by any actor failure of the Contractor.

33.11 The Party entitled to the benefit of an indemnity under this GCC Clause 33 shall take all reasonable measures to mitigate any loss or damage which has occurred. If the Party fails to take such measures, the other Party's liabilities shall be correspondingly reduced.

34 Insurance

34.1 To the extent specified in the Appendix to the Contract Agreement titled Insurance Requirements, the Contractor shall at its expense take out and maintain in effect, or cause to be taken out and maintained in effect, during the performance of the Contract, the insurances set forth below in the sums and with the deductibles and other conditions specified in the said Appendix. The identity of the insurers and the form of the policies shall be subject to the approval of the Procuring Entity, who should not unreasonably withhold such approval.

a. Cargo Insurance During Transport

Covering loss or damage occurring while in transit from the Contractor's or Subcontractor's works or stores until arrival at the Site, to the Plant (including spare parts therefor) and to the Contractor's Equipment.

b. Installation All Risks Insurance

Covering physical loss or damage to the Facilities at the Site, occurring prior to Completion of the Facilities, with an extended maintenance coverage for the Contractor's liability in respect of any loss or damage occurring during the Defect Liability Period while the Contractor is on the Site for the purpose of performing its obligations during the Defect Liability Period.

c. Third Party Liability Insurance

Covering bodily injury or death suffered by third Parties including the Procuring Entity's personnel, and loss of or damage to property occurring in connection with the supply and installation of the Facilities.

d. Automobile Liability Insurance

Covering use of all vehicles used by the Contractor or its Subcontractors, whether or not owned by them, in connection with the execution of the Contract.

c. Workers' Compensation

In accordance with the statutory requirements applicable in any country where the Contract or any part thereof is executed.

d. Procuring Entity's Liability

In accordance with the statutory requirements applicable in any country where the Contract or any part thereof is executed.

e. Other Insurances

Such other insurances as may be specifically agreed upon by the Parties here to as listed in the Appendix to the Contract Agreement titled Insurance Requirements.

34.2 The Procuring Entity shall be named as co-insured under all insurance policies taken out by the Contractor pursuant to GCC Sub-Clause 34.1, except for the Third Party Liability, Workers' Compensation and Procuring Entity's Liability Insurances, and the Contractor's Subcontractors shall be named as co-insureds under all insurance policies taken out by the Contractor pursuant to GCC Sub-Clause 34.1 except for the Cargo Insurance During Transport, Workers' Compensation and Procuring Entity's Liability Insurances. All insurer's rights of subrogation against such co-insureds for losses or claims arising out of the performance of the Contract shall be waived under such policies.

34.3 The Contractor shall, in accordance with the provisions of the Appendix to the Contract Agreement titled Insurance Requirements, deliver to the Procuring Entity certificates of insurance or copies of the insurance policies as evidence that the required policies are in full force and effect. The certificates shall provide that no less than twenty-one (21) days' notice shall be given to the Procuring Entity by insurers prior to cancellation or material modification of a policy.

34.4 The Contractor shall ensure that, where applicable, its Subcontractor(s) shall take out and maintain in effect adequate insurance policies for their personnel and vehicles and for work executed by them under the Contract, unless such Subcontractors are covered by the policies taken out by the Contractor.

34.5 The Procuring Entity shall at its expense take out and maintain in effect during the performance of the Contract those insurances specified in the Appendix to the Contract Agreement titled Insurance Requirements, in the sums and with the deductibles and other conditions specified in the said Appendix. The Contractor and the Contractor's Subcontractors shall be named as co-insureds under all such policies. All insurers' rights of subrogation against such co-insureds for losses or claims arising out of the performance of the Contract shall be waived under such policies. The Procuring Entity shall deliver to the Contractor satisfactory evidence that the required insurances are in full force and effect. The policies shall provide that not less than twenty-one (21) days' notice shall be given to the Contractor by all insurers prior to any cancellation or material modification of the policies. If so requested by the Contractor, the Procuring Entity shall provide copies of the policies taken out by the Procuring Entity under this GCC Sub-Clause 34.5.

34.6 If the Contractor fails to take out and/or maintain in effect the insurances referred to in GCC Sub-Clause 34.1, the Procuring Entity may take out and maintain in effect any such insurances and may from time to time deduct from any amount due the Contractor under the Contract any premium that the Procuring Entity shall have paid to the insurer, or may otherwise recover such amount as a debt due from the Contractor. If the Procuring Entity fails to take out and/or maintain in effect the insurances referred to in GCC 34.5, the Contractor may take out and maintain in effect any such insurances and may from time to time deduct from any amount due the Procuring Entity under the Contract any premium that the Contractor shall have paid to

the insurer, or may otherwise recover such amount as a debt due from the Procuring Entity. If the Contractor fails to or is unable to take out and maintain in effect any such insurances, the Contractor shall nevertheless have no liability or responsibility towards the Procuring Entity, and the Contractor shall have full recourse against the Procuring Entity for any and all liabilities of the Procuring Entity herein.

34.7 Unless otherwise provided in the Contract, the Contractor shall prepare and conduct all and any claims made under the policies effected by it pursuant to this GCC Clause 34, and all monies payable by any insurers shall be paid to the Contractor. The Procuring Entity shall give to the Contractor all such reasonable assistance as may be required by the Contractor. With respect to insurance claims in which the Procuring Entity's interest is involved, the Contractor shall not give any release or make any compromise with the insurer without the prior written consent of the Procuring Entity. With respect to insurance claims in which the Contractor's interest is involved, the Procuring Entity shall not give any release or make any compromise with the insurer without the prior written consent of the Contractor.

35. Unforeseen Conditions

35.1 If, during the execution of the Contract, the Contractor shall encounter on the Site any physical conditions other than climatic conditions, or artificial obstructions that could not have been reasonably foreseen prior to the date of the Contract Agreement by an experienced contractor on the basis of reasonable examination of the data relating to the Facilities including any data as to boring tests, provided by the Procuring Entity, and on the basis of information that it could have obtained from a visual inspection of the Site if access thereto was available, or other data readily available to it relating to the Facilities, and if the Contractor determines that it will in consequence of such conditions or obstructions incur additional cost and expense or require additional time to perform its obligations under the Contract that would not have been required if such physical conditions or artificial obstructions had not been encountered, the Contractor shall promptly, and before performing additional work or using additional Plant or Contractor's Equipment, notify the Project Manager in writing of

a) the physical conditions or artificial obstructions on the Site that could not have been reasonably foreseen;

c) the additional work and/or Plant and/or Contractor's Equipment required, including the steps which the Contractor will or proposes to take to overcome such conditions or obstructions;

d) the extent of the anticipated delay; and

d) the additional cost and expense that the Contractor is likely to incur.

On receiving any notice from the Contractor under this GCC Sub-Clause 35.1, the Project Manager shall promptly consult with the Procuring Entity and Contractor and decide upon the actions to be taken to overcome the physical

35.2 If the Contractor is delayed or impeded in the performance of the Contract because of any such physical conditions or artificial obstructions referred to in GCC Sub-Clause 35.1, the Time for Completion shall be extended in accordance with GCC Clause 40.

36. Change in Laws and Regulations

36.1 If, after the date twenty-eight (28) days prior to the date of Tender submission, in Kenya, any law, regulation, ordinance, order or by-law having the force of law is enacted, promulgated, abrogated or changed which shall be deemed to include any change in interpretation or application by the competent authorities, that subsequently affects the costs and expenses of the Contractor and/or the Time for Completion, the Contract Price shall be correspondingly increased or decreased, and/or the Time for Completion shall be reasonably adjusted to the extent that the Contractor has thereby been affected in the performance of any of its obligations under the Contract. Notwithstanding the foregoing, such additional or reduced costs shall not be separately paid or credited if the same has already been accounted for in the price adjustment provisions where applicable, in accordance with the **SCC** pursuant to GCC Sub-Clause 11.2.

37. Force Majeure

37.1 "Force Majeure" shall mean any event beyond the reasonable control of the Procuring Entity or of the Contractor, as the case may be, and which is unavoidable notwithstanding the reasonable care of the Party affected, and shall include, without limitation, the following:

a) war, hostilities or warlike operations whether a state of war be declared or not, invasion, act of foreign enemy and civil war
b) rebellion, revolution, insurrection, mutiny, usurpation of civil or military government, conspiracy, riot, civil commotion and terrorist acts
c) confiscation, nationalization, mobilization, commandeering or requisition by or under the order of any government or de jure or de facto authority or ruler or any other act or failure to act of any local state or national government authority
d) strike, sabotage, lockout, embargo, import restriction, port congestion, lack of usual means of public transportation and communication, industrial dispute, shipwreck, shortage or restriction of power supply, epidemics, quarantine and plague
e) earthquake, landslide, volcanic activity, fire, flood or inundation, tidal wave, typhoon or cyclone, hurricane, storm, lightning, or other inclement weather condition, nuclear and pressure waves or other natural or physical disaster
f) shortage of labor, materials or utilities where caused by circumstances that are themselves Force Majeure.

37.2 If either Party is prevented, hindered or delayed from or in performing any of its obligations under the Contract by an event of Force Majeure, then it shall notify the other in writing of the occurrence of such event and the circumstances thereof within fourteen (14) days after the occurrence of such event.

37.3 The Party who has given such notice shall be excused from the performance or punctual performance of its obligations under the Contract for so long as the relevant event of Force Majeure continues and to the extent that such Party's performance is prevented, hindered or delayed. The Time for Completion shall be extended in accordance with GCC Clause 40.

37.4 The Party or Parties affected by the event of Force Majeure shall use reasonable efforts to mitigate the effect thereof upon its or their performance of the Contract and to fulfill its or their obligations under the Contract, but without prejudice to either Party's right to terminate the Contract under GCC Sub-Clauses 37.6 and 38.5.

37.5 No delay or nonperformance by either Party hereto caused by the occurrence of any event of Force Majeure shall

a) constitute a default or breach of the Contract, or
b) give rise to any claim for damages or additional cost or expense occasioned thereby, subject to GCC Sub-Clauses 32.2, 38.3 and 38.4

if and to the extent that such delay or nonperformance is caused by the occurrence of an event of Force Majeure.

37.6 If the performance of the Contract is substantially prevented, hindered or delayed for a single period of more than sixty (60) days or an aggregate period of more than one hundred and twenty (120) days on account of one or more events of Force Majeure during the currency of the Contract, the Parties will attempt to develop a mutually satisfactory solution, failing which either Party may terminate the Contract by giving a notice to the other, but without prejudice to either Party's right to terminate the Contract under GCC Sub-Clause 38.5.

37.7 In the event of termination pursuant to GCC Sub-Clause 37.6, the rights and obligations of the Procuring Entity and the Contractor shall be as specified in GCC Sub-Clauses 42.1.2 and 42.1.3.

37.8 Notwithstanding GCC Sub-Clause 37.5, Force Majeure shall not apply to any obligation of the Procuring Entity to make payments to the Contractor herein.

38. War Risks

38.1 "War Risks" shall mean any event specified in paragraphs (a) and (b) of GCC Sub-Clause 37.1 and any explosion

or impact of any mine, bomb, shell, grenade or other projectile, missile, munitions or explosive of war, occurring or existing in or near the country (or countries) where the Site is located.

38.2 Notwithstanding anything contained in the Contract, the Contractor shall have no liability whatsoever for or with respect to

a) destruction of or damage to Facilities, Plant, or any part thereof;
b) destruction of or damage to property of the Procuring Entity or any third Party; or
c) injury or loss of life

if such destruction, damage, injury or loss of life is caused by any War Risks, and the Procuring Entity shall indemnify and hold the Contractor harmless from and against any and all claims, liabilities, actions, lawsuits, damages, costs, charges or expenses arising in consequence of or in connection with the same.

38.3 If the Facilities or any Plant or Contractor's Equipment or any other property of the Contractor used or intended to be used for the purposes of the Facilities shall sustain destruction or damage by reason of any War Risks, the Procuring Entity shall pay the Contractor for

a) any part of the Facilities or the Plant so destroyed or damaged to the extent not already paid for by the Procuring Entity and so far as may be required by the Procuring Entity, and as may be necessary for completion of the Facilities
b) replacing or making good any Contractor's Equipment or other property of the Contractor so destroyed or damaged
c) replacing or making good any such destruction or damage to the Facilities or the Plant or any part thereof.

If the Procuring Entity does not require the Contractor to replace or make good any such destruction or damage to the Facilities, the Procuring Entity shall either request a change in accordance with GCC Clause 39, excluding the performance of that part of the Facilities thereby destroyed or damaged or, where the loss, destruction or damage affects a substantial part of the Facilities, shall terminate the Contract, pursuant to GCC Sub-Clause 42.1.

If the Procuring Entity requires the Contractor to replace or make good on any such destruction or damage to the Facilities, the Time for Completion shall be extended in accordance with GCC 40.

38.4 Notwithstanding anything contained in the Contract, the Procuring Entity shall pay the Contractor for any increased costs or incidentals to the execution of the Contract that are in any way attributable to, consequent on, resulting from, or in any way connected with any War Risks, provided that the Contractor shall as soon as practicable notify the Procuring Entity in writing of any such increased cost.

38.5 If during the performance of the Contract any War Risks shall occur that financially or otherwise materially affect the execution of the Contract by the Contractor, the Contractor shall use its reasonable efforts to execute the Contract with due and proper consideration given to the safety of its and its Subcontractors' personnel engaged in the work on the Facilities, provided, however, that if the execution of the work on the Facilities becomes impossible or is substantially prevented for a single period of more than sixty (60) days or an aggregate period of more than one hundred and twenty (120) days on account of any War Risks, the Parties will attempt to develop a mutually satisfactory solution, failing which either Party may terminate the Contract by giving a notice to the other.

38.6 In the event of termination pursuant to GCC Sub-Clauses 38.3 or 38.5, the rights and obligations of the Procuring Entity and the Contractor shall be specified in GCC Sub-Clauses 42.1.2 and 42.1.3. A. Change in Contract Elements.

A. Change in Contract Elements

39. Change in the Facilities

39.1 Introducing a Change

39.1.1 Subject to GCC Sub-Clauses 39.2.5 and 39.2.7, the Procuring Entity shall have the right to propose, and subsequently require, that the Project Manager order the Contractor from time to time during the performance of the Contract to make any change, modification, addition or deletion to, in or from the Facilities here in after called “Change”, provided that such Change falls within the general scope of the Facilities and does not constitute unrelated work and that it is technically practicable, taking into account both the state of advancement of the Facilities and the technical compatibility of the Change envisaged with the nature of the Facilities as specified in the Contract.

39.1.2 Value Engineering: The Contractor may prepare, at its own cost, a value engineering proposal at any time during the performance of the contract. The value engineering proposal shall, at a minimum, include the following;

a) The proposed change (s), and a description of the difference to the existing contract requirements;
b) a full cost/benefit analysis of the proposed change(s) including a description and estimate of costs (including life cycle costs) the Procuring Entity may incur in implementing the value engineering proposal; and
c) a description of any effect (s) of the change on performance/ functionality.

The Procuring Entity may accept the value engineering proposal if the proposal demonstrates benefits that:

a) accelerates the delivery period; or
b) reduces the Contract Price or the life cycle costs to the Procuring Entity; or
c) improves the quality, efficiency, safety or sustain ability of the Facilities; or
d) yields any other benefits to the Procuring Entity, without compromising the necessary functions of the Facilities.

If the value engineering proposal is approved by the Procuring Entity and results in:

(a) a reduction of the Contract Price; the amount to be paid to the Contractor shall be the percentage specified in the **SCC** of the reduction in the Contract Price; or
(b) an increase in the Contract Price; but results in a reduction in life cycle costs due to any benefit described in (a) to (d) above, the amount to be paid to the Contractor shall be the full increase in the Contract Price.

39.1.3 Notwithstanding GCC Sub-Clauses 39.1.1 and 39.1.2, no change made necessary because of any default of the Contractor in the performance of its obligations under the Contract shall be deemed to be a Change, and such change shall not result in any adjustment of the Contract Price or the Time for Completion.

39.1.4 The procedure on how to proceed with and execute Changes is specified in GCC Sub-Clauses 39.2 and 39.3, and further details and forms are provided in the Procuring Entity's Requirements (Forms and Procedures).

39.2 Changes Originating from Procuring Entity

39.2.1 If the Procuring Entity proposes a Change pursuant to GCC Sub-Clause 39.1.1, it shall send to the Contractor a "Request for Change Proposal," requiring the Contractor to prepare and furnish to the Project Manager as soon as reasonably practicable a "Change Proposal," which shall include the following:

a) Brief description of the Change
b) Effect on the Time for Completion
c) Estimated cost of the Change
d) Effect on Functional Guarantees (if any)
e) Effect on the Facilities
f) Effect on any other provisions of the Contract.

39.2.2 Prior to preparing and submitting the "Change Proposal," the Contractor shall submit to the Project Manager an "Estimate for Change Proposal," which shall be an estimate of the cost of preparing and submitting the Change Proposal.

Upon receipt of the Contractor's Estimate for Change Proposal, the Procuring Entity shall do one of the following:

- Accept the Contractor's estimate with instructions to the Contractor to proceed with the preparation of the Change Proposal
- Advise the Contractor of any part of its Estimate for Change Proposal that is unacceptable and request the Contractor to review its estimate
- Advise the Contractor that the Procuring Entity does not intend to proceed with the Change.

39.2.3 Upon receipt of the Procuring Entity's instruction to proceed under GCC Sub-Clause 39.2.2 (a), the Contractor shall, with proper expedition, proceed with the preparation of the Change Proposal, in accordance with GCC Sub-Clause 39.2.1.

39.2.4 The pricing of any Change shall, as far as practicable, be calculated in accordance with the rates and prices included in the Contract. If such rates and prices are inequitable, the Parties there to shall agree on specific rates for the valuation of the Change.

39.1.5 If before or during the preparation of the Change Proposal it becomes apparent that the aggregate effect of compliance there with and with all other Change Orders that have already become binding upon the Contractor under this GCC Clause 39 would be to increase or decrease the Contract Price as originally set for thin Article 2 (Contract Price) of the Contract Agreement by more than fifteen percent (15%), the Contractor may give a written notice of objection there to prior to furnishing the Change Proposal as aforesaid. If the Procuring Entity accepts the Contractor's objection, the Procuring Entity shall withdraw the proposed Change and shall notify the Contractor in writing thereof.

The Contractor's failure to so object shall neither affect its right to object to any subsequent requested Changes or Change Orders here in, nor affect its right to take in to account, when making such subsequent objection, the percentage increase or decrease in the Contract Price that any Change not objected to by the Contractor represents.

39.1.6 Upon receipt of the Change Proposal, the Procuring Entity and the Contractor shall mutually agree upon all matters therein contained. Within fourteen (14) days after such agreement, the Procuring Entity shall, if it intends to proceed with the Change, issue the Contractor with a Change Order.

If the Procuring Entity is unable to reach a decision within fourteen (14) days, it shall notify the Contractor with details of when the Contractor can expect a decision.

If the Procuring Entity decides not to proceed with the Change for whatever reason, it shall, within the said period of fourteen (14) days, notify the Contractor accordingly. Under such circumstances, the Contractor shall be entitled to reimbursement of all costs reasonably incurred by it in the preparation of the Change Proposal, provided that these do not exceed the amount given by the Contractor in its Estimate for Change Proposal submitted in accordance with GCC Sub-Clause 39.2.2.

39.1.7 If the Procuring Entity and the Contractor cannot reach agreement on the price for the Change, an equitable adjustment to the Time for Completion, or any other matters identified in the Change Proposal, the Procuring Entity may nevertheless instruct the Contractor to proceed with the Change by issue of a "Pending Agreement Change Order."

Upon receipt of a Pending Agreement Change Order, the Contractor shall immediately proceed with effecting the Changes covered by such Order. The Parties shall there after attempt to reach agreement on the outstanding issues under the Change Proposal.

If the Parties cannot reach agreement within sixty (60) days from the date of issue of the Pending Agreement Change Order, then the matter may be referred to the Dispute Board in accordance with the provisions of GCC Sub-Clause 46.1.

39.1.8 Changes Originating from Contractor

39.1.9 If the Contractor proposes a Change pursuant to GCC Sub-Clause 39.1.2, the Contractor shall submit to the Project Manager a written "Application for Change Proposal," giving reasons for the proposed Change and including the information specified in GCC Sub-Clause 39.1.2.

39.1.10 Upon receipt of the Application for Change Proposal, the Parties shall follow the procedures outlined in GCC Sub-Clauses 39.2.6 and 39.2.7. However, the Contractor shall not be entitled to recover the costs of preparing the Application for Change Proposal.

40. Extension of Time for Completion

40.1 The Time(s) for Completion specified in the **SCC** pursuant to GCC Sub-Clause 8.2 shall be extended if the Contractor is delayed or impeded in the performance of any of its obligations under the Contract by reason of any of the following:

a) any Change in the Facilities as provided in GCC Clause 39

b) any occurrence of Force Majeure as provided in GCC Clause 37, unforeseen conditions as provided in GCC Clause 35, or other occurrence of any of the matters specified or referred to in paragraphs (a), (b) and (c) of GCC Sub-Clause 32.2

c) Any suspension order given by the Procuring Entity under GCC Clause 41 here of or reduction in the rate of progress pursuant to GCC Sub-Clause 41.2 or

- Any changes in laws and regulations as provided in GCC Clause 36 or
- Any default or breach of the Contract by the Procuring Entity, Appendix to the Contract Agreement titled, or any activity, actor omission of the Procuring Entity, or the Project Manager, or any other contractors employed by the Procuring Entity, or
- Any delay on the part of a Subcontractor, provided such delay is due to a cause for which the Contractor himself would have been entitled to an extension of time under this sub-clause, or
- Delays attributable to the Procuring Entity or caused by customs, or

h) any other matter specifically mentioned in the Contract by such period as shall be fair and reasonable in all the circumstances and as shall fairly reflect the delay or impediment sustained by the Contractor.

40.2 Except where otherwise specifically provided in the Contract, the Contractor shall submit to the Project Manager a notice of a claim for an extension of the Time for Completion, together with particulars of the event or circumstance justifying such extension as soon as reasonably practicable after the commencement of such event or circumstance. As soon as reasonably practicable after receipt of such notice and supporting particulars of the claim, the Procuring Entity and the Contractor shall agree upon the period of such extension. In the event that the Contractor does not accept the Procuring Entity's estimate of a fair and reasonable time extension, the Contractor shall be entitled to refer the matter to a Dispute Board, pursuant to GCC Sub-Clause 46.1.

40.3 The Contractor shall at all times use its reasonable efforts to minimize any delay in the performance of its obligations under the Contract.

40.4 In all cases where the Contractor has given a notice of a claim for an extension of time under GCC 40.2, the Contractor shall consult with the Project Manager in order to determine the steps (if any) which can be taken to overcome or minimize the actual or anticipated delay. The Contractor shall there after comply with all reasonable instructions which the Project Manager shall give in order to minimize such delay. If compliance with such instructions shall cause the Contractor to incur extra costs and the Contractor is entitled to an extension of time under GCC 40.1, the amount of such extra costs shall be added to the Contract Price.

41 Suspension

41.1 Procuring Entity may request the Project Manager, by notice to the Contractor, to order the Contractor to suspend performance of any or all of its obligations under the Contract. Such notice shall specify the obligation of which performance is to be suspended, the effective date of the suspension and the reasons therefor. The Contractor shall thereupon suspend performance of such obligation, except those obligations necessary for the care or preservation of the Facilities, until ordered in writing to resume such performance by the Project Manager.

If, by virtue of a suspension order given by the Project Manager, other than by reason of the Contractor's default or breach of the Contract, the Contractor's performance of any of its obligations is suspended for an aggregate period of more than ninety (90) days, then at any time there after and provided that at that time such performance is still suspended, the Contractor may give a notice to the Project Manager requiring that the Procuring Entity shall, within twenty-eight (28) days of receipt of the notice, order the resumption of such performance or request and subsequently order a change in accordance with GCC Clause 39, excluding the performance of the suspended obligations from the Contract.

41.2 If the Procuring Entity fails to do so within such period, the Contractor may, by a further notice to the Project Manager, elect to treat the suspension, where it affects apart only of the Facilities, as a deletion of such part in accordance with GCC Clause 39 or, where it affects the whole of the Facilities, as termination of the Contract under GCC Sub-Clause.

41.3 If

a. Procuring Entity has failed to pay the Contractor any sum due under the Contract within the specified period, has failed to approve any invoice or supporting documents without just cause pursuant to the Appendix to the Contract Agreement titled Terms and Procedures of Payment, or commits a substantial breach of the Contract, the Contractor may give a notice to the Procuring Entity that requires payment of such sum, with interest there on as stipulated in GCC Sub-Clause 12.3, requires approval of such invoice or supporting documents, or specifies the breach and requires the Procuring Entity to remedy the same, as the case may be. If the Procuring Entity fails to pay such sum together with such interest, fails to approve such invoice or supporting documents or give its reasons for withholding such approval, or fails to remedy the breach or take steps to remedy the breach within fourteen (14) days after receipt of the Contractor's notice or

b. The Contractor is unable to carry out any of its obligations under the Contract for any reason attributable to the Procuring Entity, including but not limited to the Procuring Entity's failure to provide possession of or access to the Site or other areas in accordance with GCC Sub-Clause 10.2, or failure to obtain any governmental permit necessary for the execution and/or completion of the Facilities, then the Contractor may by fourteen (14) days' notice to the Procuring Entity suspend performance of all or any of its obligations under the Contract, or reduce the rate of progress.

41.3 If the Contractor's performance of its obligations is suspended or the rate of progress is reduced pursuant to this GCC Clause 41, then the Time for Completion shall be extended in accordance with GCC Sub-Clause 40.1, and any and all additional costs or expenses incurred by the Contractor as a result of such suspension or reduction shall be paid by the Procuring Entity to the Contractor in addition to the Contract Price, except in the case of suspension order or reduction in the rate of progress by reason of the Contractor's default or breach of the Contract.

41.4 During the period of suspension, the Contractor shall not remove from the Site any Plant, any part of the Facilities or any Contractor's Equipment, without the prior written consent of the Procuring Entity.

42 Termination

42.1 Termination for Procuring Entity's Convenience

42.1.1 The Procuring Entity may at any time terminate the Contract for any reason by giving the Contractor a notice of termination that refers to this GCC Sub-Clause 42.1.

42.1.2 Upon receipt of the notice of termination under GCC Sub-Clause 42.1.1, the Contractor shall either immediately or upon the date specified in the notice of termination

a) cease all further work, except for such work as the Procuring Entity may specify in the notice of termination for the sole purpose of protecting that part of the Facilities already executed, or any work required to leave the Site in a clean and safe condition,

b) terminate all subcontracts, except those to be assigned to the Procuring Entity pursuant to paragraph (d) (ii) below,

c) remove all Contractor's Equipment from the Site, repatriate the Contractor's and its Subcontractors' personnel from the Site, remove from the Site any wreckage, rubbish and debris of any kind, and leave the whole of the Site in a clean and safe condition, and

d) subject to the payment specified in GCC Sub-Clause 42.1.3,
   i. deliver to the Procuring Entity the parts of the Facilities executed by the Contractor up to the date of termination
   ii. to the extent legally possible, assign to the Procuring Entity all right, title and benefit of the Contractor to the Facilities and to the Plant as of the date of termination, and, as may be required by the Procuring Entity, in any subcontracts concluded between the Contractor and its Subcontractors; and
   iii. deliver to the Procuring Entity all non-proprietary drawings, specifications and other documents prepared by the Contractor or its Subcontractors as at the date of termination in connection with the Facilities.

42.1.3 In the event of termination of the Contract under GCC Sub-Clause 42.1.1, the Procuring Entity shall pay to the Contractor the following amounts:

a The Contract Price, properly attributable to the parts of the Facilities executed by the Contractor as of the date of termination,
b the costs reasonably incurred by the Contractor in the removal of the Contractor's Equipment from the Site and in the repatriation of the Contractor's and its Subcontractors' personnel,
c any amounts to be paid by the Contractor to its Subcontractors in connection with the termination of any subcontracts, including any cancellation charges,
d costs incurred by the Contractor in protecting the Facilities and leaving the Site in a clean and safe condition pursuant to paragraph (a) of GCC Sub-Clause 42.1.2
e the cost of satisfying all other obligations, commitments and claims that the Contractor may in good faith have under taken with third Parties in connection with the Contract and that are not covered by paragraphs (a) through (d) above.

42.2 Termination by the Contractor

42.2.1 The Procuring Entity, without prejudice to any other rights or remedies it may possess, may terminate the Contract forth within the following circumstances by giving a notice of termination and its reasons there for to the Contractor, referring to this GCC Sub-Clause 42.2:

a If the Contractor becomes bankrupt or in solvent, has a receiving order issued against it, compounds with its creditors, or, if the Contractor is a corporation, are solution is passed or order is made for its winding up, other than a voluntary liquidation for the purposes of amalgamation or reconstruction, a receiver is appointed over any part of its undertaking or assets, or if the Contractor takes or suffers any other analogous action in consequence of debt
b if the Contractor assigns or transfers the Contract or any right or interest therein in violation of the provision of GCC Clause 43.
c If the Contractor, in the judgment of the Procuring Entity has engaged in Fraud and Corruption, as defined in paragraph 2.2a. of Appendix B to the GCC, in competing for or in executing the Contract.

42.2.2 If the Contractor

a Has abandoned or repudiated the Contract
b Has without valid reason failed to commence work on the Facilities promptly or has suspended, other than pursuant to GCC Sub-Clause 41.2, the progress of Contract performance for more than twenty-eight (28) days after receiving a written instruction from the Procuring Entity to proceed
c Persistently fails to execute the Contract in accordance with the Contractor persistently neglects to carry out its obligations under the Contract without just cause
d Refuses or is unable to provide sufficient materials, services or labor to execute and complete the Facilities in the manner specified in the program furnished under GCC Sub-Clause 18.2 at rates of progress that give reasonable assurance to the Procuring Entity that the Contractor can attain Completion of the Facilities by the Time for Completion as extended, then the Procuring Entity may, without prejudice to any other rights it may possess under the Contract, give a notice to the Contractor stating the nature of the default and requiring the Contractor to remedy the same. If the Contractor fails to remedy or to take steps to remedy the same within fourteen (14) days of its receipt of such notice, then the Procuring Entity may terminate the Contract forth with by giving a notice of termination to the Contractor that refers to this GCC Sub-Clause 42.2.

42.2.3 Upon receipt of the notice of termination under GCC Sub-Clauses 42.2.1 or 42.2.2, the Contractor shall, either immediately or upon such date as is specified in the notice of termination,

a cease all further work, except for such work as the Procuring Entity may specify in the notice of termination for the sole purpose of protecting that part of the Facilities already executed, or any work required to leave the Site in a clean and safe condition.
b Terminate all subcontracts, except those to be assigned to the Procuring Entity pursuant to paragraph (d) below,
c deliver to the Procuring Entity the parts of the Facilities executed by the Contractor up to the date of termination,
d to the extent legally possible, assign to the Procuring Entity all right, title and benefit of the Contractor to the Facilities and to the Plant as of the date of termination, and, as may be required by the Procuring

Entity, in any subcontracts concluded between the Contractor and its Subcontractors,

e deliver to the Procuring Entity all drawings, specifications and other documents prepared by the Contractor or its Subcontractors as of the date of termination in connection with the Facilities.

42.2.4 The Procuring Entity may enter upon the Site, expel the Contractor, and complete the Facilities itself or by employing any third Party. The Procuring Entity may, to the exclusion of any right of the Contractor over the same, take over and use with the payment of a fair rental rate to the Contractor, with all the maintenance costs to the account of the Procuring Entity and with an indemnification by the Procuring Entity for all liability including damage or injury to persons arising out of the Procuring Entity's use of such equipment, any Contractor's Equipment owned by the Contractor and on the Site in connection with the Facilities for such reasonable period as the Procuring Entity considers expedient for the supply and installation of the Facilities.

42.2.5 Upon completion of the Facilities or at such earlier date as the Procuring Entity thinks appropriate, the Procuring Entity shall give notice to the Contractor that such Contractor's Equipment will be returned to the Contractor at or near the Site and shall return such Contractor's Equipment to the Contractor in accordance with such notice. The Contractor shall thereafter without delay and at its cost remove or arrange removal of the same from the Site.

42.2.6 Subject to GCC Sub-Clause 42.2.6, the Contractor shall be entitled to be paid the Contract Price attributable to the Facilities executed as of the date of termination, the value of any unused or partially used Plant on the Site, and the costs, if any, incurred in protecting the Facilities and in leaving the Site in a clean and safe condition pursuant to paragraph (a) of GCC Sub-Clause 42.2.3. Any sums due the Procuring Entity from the Contractor accruing prior to the date of termination shall be deducted from the amount to be paid to the Contractor under this Contract.

42.2.7 If the Procuring Entity completes the Facilities, the cost of completing the Facilities by the Procuring Entity shall be determined.

42.2.8 If the sum that the Contractor is entitled to be paid, pursuant to GCC Sub-Clause 42.2.5, plus the reasonable costs incurred by the Procuring Entity in completing the Facilities, exceeds the Contract Price, the Contractor shall be liable for such excess.

42.2.9 If such excess is greater than the sums due the Contractor under GCC Sub-Clause 42.2.5, the Contractor shall pay the balance to the Procuring Entity, and if such excess is less than the sums due the Contractor under GCC Sub-Clause 42.2.5, the Procuring Entity shall pay the balance to the Contractor. The Procuring Entity and the Contractor shall agree, in writing, on the computation described above and the manner in which any sums shall be paid.

42.3 Termination by the Contractor

42.3.1 If

a The Procuring Entity has failed to pay the Contractor any sum due under the Contract within the specified period, has failed to approve any invoice or supporting documents without just cause pursuant to the Appendix to the Contract Agreement titled Terms and Procedures of Payment, or commits a substantial breach of the Contract, the Contractor may give a notice to the Procuring Entity that requires payment of such sum, with interest there on as stipulated in GCC Sub-Clause 12.3, requires approval of such invoice or supporting documents, or specifies the breach and requires the Procuring Entity to remedy the same, as the case may be. If the Procuring Entity fails to pay such sum together with such interest, fails to approve such invoice or supporting documents or give its reasons for withholding such approval, fails to remedy the breach or take steps to remedy the breach within fourteen (14) days after receipt of the Contractor's notice, or

b The Contractor is unable to carry out any of its obligations under the Contract for any reason attributable to the Procuring Entity, including but not limited to the Procuring Entity's failure to provide possession of or access to the Site or other areas or failure to obtain any governmental permit necessary for the execution and/or completion of the Facilities, then the Contractor may give a notice to the Procuring Entity thereof, and if the Procuring Entity has failed to pay the outstanding sum, to approve the invoice or supporting documents, to give its reasons for withholding such approval, or to remedy the breach within twenty-eight (28) days of such notice, or if the Contractor is still unable to carry out any of its obligations under the Contract for any reason attributable to the Procuring Entity within twenty-eight (28) days of the said notice, the Contractor may by a further notice to the Procuring Entity referring to

this GCC Sub-Clause 42.3.1, forth with terminate the Contract.

42.3.2 The Contractor may terminate the Contract forth with by giving a notice to the Procuring Entity to that effect, referring to this GCC Sub-Clause 42.3.2, if the Procuring Entity becomes bankrupt or insolvent, has a receiving order issued against it, compounds with its creditors, or, being a corporation, if are solution is passed or order is made for its winding up (other than a voluntary liquidation for the purposes of amalgamation or reconstruction), a receiver is appointed over any part of its undertaking or assets, or if the Procuring Entity takes or suffers any other analogous action in consequence of debt.

42.3.3 If the Contract is terminated under GCC Sub-Clauses 42.3.1 or 42.3.2, then the Contractor shall immediately

a) cease all further work, except for such work as may be necessary for the purpose of protecting that part of the Facilities already executed, or any work required to leave the Site in a clean and safe condition
b) terminate all subcontracts, except those to be assigned to the Procuring Entity pursuant to paragraph (d) (ii)
c) remove all Contractor's Equipment from the Site and repatriate the Contractor's and its Subcontractors' personnel from the Site, and
d) subject to the payment specified in GCC Sub-Clause 42.3.4,
   i. deliver to the Procuring Entity the parts of the Facilities executed by the Contractor up to the date of termination
   ii. to the extent legally possible, assign to the Procuring Entity all right, title and benefit of the Contractor to the Facilities and to the Plant as of the date of termination, and, as may be required by the Procuring Entity, in any subcontracts concluded between the Contractor and its Subcontractors, and
   iii. deliver to the Procuring Entity all drawings, specifications and other documents prepared by the Contractor or its Subcontractors as of the date of termination in connection with the Facilities.

42.3.4 If the Contract is terminated under GCC Sub-Clauses 42.3.1 or 42.3.2, the Procuring Entity shall pay to the Contractor all payments specified in GCC Sub-Clause 42.1.3, and reasonable compensation for all loss, except for loss of profit, or damage sustained by the Contractor arising out of, in connection with or in consequence of such termination.

42.3.5 Termination by the Contractor pursuant to this GCC Sub-Clause 42.3 is without prejudice to any other rights or remedies of the Contractor that may be exercised in lieu of or in addition to rights conferred by GCC Sub-Clause 42.3.

42.4 In this GCC Clause 42, the expression “Facilities executed” shall include all work executed, Installation Services provided, and all Plant acquired, or subject to a legally binding obligation to purchase, by the Contractor and used or intended to be used for the purpose of the Facilities, up to and including the date of termination.

42.5 In this GCC Clause 42, in calculating any monies due from the Procuring Entity to the Contractor, account shall be taken of any sum previously paid by the Procuring Entity to the Contractor under the Contract, including any advance payment paid pursuant to the Appendix to the Contract Agreement titled Terms and Procedures of Payment.

43. Assignment

43.1 Neither the Procuring Entity nor the Contractor shall, without the express prior written consent of the other Party, which consent shall not be unreasonably withheld, assign to any third Party the Contract or any part thereof, or any right, benefit, obligation or interest therein or thereunder, except that the Contractor shall be entitled to assign either absolutely or by way of charge any monies due and payable to it or that may become due and payable to it under the Contract.

44. Export Restrictions

44.1 Notwithstanding any obligation under the Contract to complete all export formalities, any export restrictions attributable to the Procuring Entity, to Kenya or to the use of the Plant and Installation Services to be supplied

which arise from trade regulations from a country supplying those Plant and Installation Services, and which substantially impede the Contractor from meeting its obligations under the Contract, shall release the Contractor from the obligation to provide deliveries or services, always provided, however, that the Contractor can demonstrate to the satisfaction of the Procuring Entity and of the Bank that it has completed all formalities in a timely manner, including applying for permits, authorizations and licenses necessary for the export of the Plant and Installation Services under the terms of the Contract. Termination of the Contract on this basis shall be for the Procuring Entity's convenience pursuant to Sub-Clause 42.1.

B. Claims, Disputes and Arbitration

45. Contractor's Claims

45.1 If the Contractor considers himself to be entitled to any extension of the Time for Completion and/or any additional payment, under any Clause of these Conditions or otherwise in connection with the Contract, the Contractor shall submit a notice to the Project Manager, describing the event or circumstance giving rise to the claim. The notice shall be given as soon as practicable, and not later than 28 days after the Contractor became aware, or should have become aware, of the event or circumstance.

45.2 If the Contractor fails to give notice of a claim within such period of 28 days, the Time for Completion shall not be extended, the Contractor shall not be entitled to additional payment, and the Procuring Entity shall be discharged from all liability in connection with the claim. Otherwise, the following provisions of this Sub-Clause shall apply.

(a) The Contractor shall also submit any other notices which are required by the Contract, and supporting particulars for the claim, all as relevant to such event or circumstance.

(b) The Contractor shall keep such contemporary records as may be necessary to substantiate any claim, either on the Site or at another location acceptable to the Project Manager. Without admitting the Procuring Entity's liability, the Project Manager may, after receiving any notice under this Sub-Clause, monitor the record-keeping and/or instruct the Contractor to keep further contemporary records. The Contractor shall permit the Project Manager to inspect all these records, and shall (if instructed) submit copies to the Project Manager.

45.3 Within 42 days after the Contractor became aware (or should have become aware) of the event or circumstance giving rise to the claim, or within such other period as may be proposed by the Contractor and approved by the Project Manager, the Contractor shall send to the Project Manager a fully detailed claim which includes full supporting particulars of the basis of the claim and of the extension of time and/or additional payment claimed. If the event or circumstance giving rise to the claim has a continuing effect:

a) this fully detailed claim shall be considered as interim;

b) the Contractor shall send further interim claims at monthly intervals, giving the accumulated delay and/or amount claimed, and such further particulars as the Project Manager may reasonably require; and

c) the Contractor shall send a final claim within 28 days after the end of the effects resulting from the event or circumstance, or within such other period as may be proposed by the Contractor and approved by the Project Manager.

45.4 Within 42 days after receiving a claim or any further particulars supporting a previous claim, or within such other period as may be proposed by the Project Manager and approved by the Contractor, the Project Manager shall respond with approval, or with disapproval and detailed comments. He may also request any necessary further particulars, but shall nevertheless give his response on the principles of the claim within such time.

45.5 Each Payment Certificate shall include such amounts for any claim as have been reasonably substantiated as due under the relevant provision of the Contract. Unless and until the particulars supplied are sufficient to

substantiate the whole of the claim, the Contractor shall only be entitled to payment for such part of the claim as he has been able to substantiate.

45.6 The Project Manager shall agree with the Contractor or estimate: (i) the extension (if any) of the Time for Completion (before or after its expiry) in accordance with GCC Clause 40, and/or (ii) the additional payment (if any) to which the Contractor is entitled under the Contract.

45.7 The requirements of this Sub-Clause are in addition to those of any other Sub-Clause which may apply to a claim. If the Contractor fails to comply with this or another Sub-Clause in relation to any claim, any extension of time and/or additional payment shall take account of the extent (if any) to which the failure has prevented or prejudiced proper investigation of the claim, unless the claim is excluded under the second paragraph of this Sub-Clause.

45.8 In the event that the Contractor and the Procuring Entity cannot agree on any matter relating to a claim, either Party may refer the matter to the Dispute Board pursuant to GCC 46 hereof.

46. Claims, Disputes and Arbitration

46.1 Contractor's Claims

46.1.1 If the Contractor considers himself to be entitled to any extension of the Time for Completion and/or any additional payment, under any Clause of these Conditions or otherwise in connection with the Contract, the Contractor shall give notice to the Project Manager, describing the event or circumstance giving rise to the claim. The notice shall be given as soon as practicable, and not later than 28 days after the Contractor became aware, or should have become aware, of the event or circumstance.

46.1.2 If the Contractor fails to give notice of a claim within such period of 28 days, the Time for Completion shall not be extended, the Contractor shall not be entitled to additional payment, and the Procuring Entity shall be discharged from all liability in connection with the claim. Otherwise, the following provisions of this Sub-Clause shall apply. The Contractor shall also submit any other notices which are required by the Contract, and supporting particulars for the claim, all as relevant to such event or circumstance.

46.1.3 The Contractor shall keep such contemporary records as may be necessary to substantiate any claim, either on the Site or at another location acceptable to the Project Manager. Without admitting the Procuring Entity's liability, the Project Manager may, after receiving any notice under this Sub-Clause, monitor the record-keeping and/or instruct the Contractor to keep further contemporary records. The Contractor shall permit the Project Manager to inspect all these records, and shall (if instructed) submit copies to the Project Manager.

46.1.4 Within 42 days after the Contractor became aware (or should have become aware) of the event or circumstance giving rise to the claim, or within such other period as may be proposed by the Contractor and approved by the Project Manager, the Contractor shall send to the Project Manager a fully detailed claim which includes full supporting particulars of the basis of the claim and of the extension of time and/or additional payment claimed. If the event or circumstance giving rise to the claim has a continuing effect:

a) this fully detailed claim shall be considered as interim;

b) the Contractor shall send further interim claims at monthly intervals, giving the accumulated delay and/or amount claimed, and such further particulars as the Project Manager may reasonably require; and

c) the Contractor shall send a final claim within 28 days after the end of the effects resulting from the event or circumstance, or within such other period as may be proposed by the Contractor and approved by the Project Manager.

46.1.5 Within 42 days after receiving a claim or any further particulars supporting a previous claim, or within such other period as may be proposed by the Project Manager and approved by the Contractor, the Project Manager shall respond with approval, or with disapproval and detailed comments. He may also request any necessary further particulars, but shall nevertheless give his response on the principles of the claim within the above defined time period.

46.1.6 Within the above defined period of 42 days, the Project Manager shall proceed in accordance with Sub-Clause 3.5 [Determinations] to agree or determine (i) the extension (if any) of the Time for Completion

(before or after its expiry) in accordance with Sub-Clause 8.4 [Extension of Time for Completion], and/or (ii) the additional payment (if any) to which the Contractor is entitled under the Contract.

46.1.7 Each Payment Certificate shall include such additional payment for any claim as has been reasonably substantiated as due under the relevant provision of the Contract. Unless and until the particulars supplied are sufficient to substantiate the whole of the claim, the Contractor shall only be entitled to payment for such part of the claim as he has been able to substantiate.

46.1.8 If the Project Manager does not respond within the timeframe defined in this Clause, either Party may consider that the claim is rejected by the Project Manager and any of the Parties may refer the matter to Arbitration in accordance with Sub-Clause 46.4.

46.1.9 The requirements of this Sub-Clause are in addition to those of any other Sub-Clause which may apply to a claim. If the Contractor fails to comply with this or another Sub-Clause in relation to any claim, any extension of time and/or additional payment shall take account of the extent (if any) to which the failure has prevented or prejudiced proper investigation of the claim, unless the claim is excluded under the second paragraph of this Sub-Clause.

46.2 Issuing a Notice of Dissatisfaction

If a dispute (of any kind whatsoever) arises between the Parties in connection with, or arising out of, the Contract or the execution of the Works, including any dispute as to any certificate, determination, instruction, opinion or valuation of the Project Manager, either Party may refer the dispute in writing to the Project Manager by issuing a Notice of Dissatisfaction and requesting the matter be referred to Arbitration.

46.3 Amicable Settlement

Where a Notice of Dissatisfaction has been given, both Parties shall attempt to settle the dispute amicably before the commencement of arbitration. However, unless both Parties agree otherwise, the Party giving a Notice of Dissatisfaction should move to commence arbitration after the fifty-sixth day from the day on which a Notice of Dissatisfaction was given, even if no attempt at an amicable settlement has been made.

46.4 Arbitration

46.4.1 Any dispute between the Parties arising out of or in connection with the Contract not settled amicably in accordance with Sub-Clause 46.3 above shall be finally settled by arbitration. Arbitration shall be conducted as follows:

a) if the contract is with foreign contractors, the dispute shall be referred to international arbitration either:
   i) with proceedings administered by the arbitration institution designated in the Special Conditions of Contract, and conducted under the rules of arbitration of such institution; or, if so specified in the Special Conditions of Contract, or
   ii) international arbitration in accordance with the arbitration rules of the United Nations Commission on International Trade Law (UNCITRAL), unless specified otherwise in the **SCC**;
b) if the Contract is with domestic contractors, arbitration with proceedings conducted in accordance with the Arbitration Laws of Kenya.

46.4.2 The place of arbitration shall be the neutral location specified in the Special Conditions of Contract; and the arbitration shall be conducted in the English Language for all communications.

46.4.3 The arbitrators shall have full power to open up, review and revise any certificate, determination, instruction, opinion or valuation of the Project Manager. Nothing shall disqualify representatives of the Parties and the Project Manager from being called as a witness and giving evidence before the arbitrators on any matter whatsoever relevant to the dispute.

46.4.4 Neither Party shall be limited in the proceedings before the arbitrators to the evidence to obtain its decision, or to the reasons for dissatisfaction given in its Notice of Dissatisfaction.

46.4.5 Arbitration may be commenced prior to or after completion of the Works. The obligations of the Parties and the Project Manager shall not be altered by reason of any arbitration being conducted during the progress of the Works.

46.4.6 The Decision of the Arbitration proceedings will be final and binding on both parties.

SECTION IX - SPECIAL CONDITIONS OF CONTRACT

The following Special Conditions of Contract shall supplement the General Conditions of Contract in Section VIII. Whenever there is a conflict, the provisions herein shall prevail over those in the General Conditions.

Special Conditions of Contract (SCC)

The following Special Conditions (SCC) shall supplement the General Conditions (GCC). Whenever there is a conflict, the provisions here in shall prevail over those in the GCC. The clause number of the SCC is the corresponding clause number of the GCC.

Number of GC Clause	**Amendments of, and Supplements to, Clauses in the General Conditions of Contract**
SCC 1. Definitions	The Procuring Entity is: _____ The Project Manager is: _____ Country of Origin: all countries and territories as indicated in Section V of the Tendering document, Eligible Countries.
SCC 5. Law and Language	SCC 5.1 The Contract shall be interpreted in accordance with the laws of: _____. SCC 5.2 The ruling language is: _____ SCC 5.3 The language for communications is: _____
SCC 7. Scope of Facilities [Spare Parts] (GCC Clause 7)	SCC 7.3 The Contractor agrees to supply spare parts for a period of years: _____ **Sample Addition to** SCC **7.3** The Contractor shall carry sufficient inventories to ensure an ex-stock supply of consumable spares for the Plant. Other spare parts and components shall be supplied as promptly as possible, but at the most within six (6) months of placing the order and opening the Form of credit. In addition, in the event of termination of the production of spare parts, advance notification will be made to the Procuring Entity of the pending termination, with sufficient time to permit the Procuring Entity to procure the needed requirement. Following such termination, the Contractor will furnish to the extent possible and at no cost to the Procuring Entity the blueprints, drawings and specifications of the spare parts, if requested.
SCC 8. Time for Commencement and Completion	SCC 8.1 The Contractor shall commence work on the Facilities within _____from the Effective Date for determining Time for Completion as specified in the Contract Agreement. SCC 8.2 The Time for Completion of the whole of the Facilities shall be _____from the Effective Date as described in the Contract Agreement.
SCC 9. Contractor's Responsibilities	The following sustainable procurement contractual provisions apply: _____
SCC 11. Contract Price	SCC 11.2 The Contract Price shall be adjusted in accordance with the provisions of the Appendix to the Contract Agreement Titled Adjustment Clause.
SCC 13. Securities	SCC 13.3.1 The amount of Performance Security, as a percentage of the Contract Price for the Facility or for the part of the Facility for which a separate Time for Completion is provided, shall be: _____ SCC 13.3.2 The Performance Security shall be in the form of the _____attached hereto in Section X, Contract Forms. SCC 13.3.3 The Performance Security shall not be reduced on the date of the Operational Acceptance.

Number of GC Clause	Amendments of, and Supplements to, Clauses in the General Conditions of Contract
	SCC 13.3.3 The Performance Security shall be reduced to ten percent (10%) of the value of the component covered by the extended defect liability to cover the Contractor's extended defect liability in accordance with the provision in the SCC, pursuant to GCC Sub-Clause 27.10.
SCC 22 Installation	SCC22.2.5 Working Hours Normal working hours are: _____ SCC 22.2.8 Funeral Arrangements: _____
SCC 25. Commissioning and Operational Acceptance	SCC 25.2.2 The Guarantee Test of the Facilities shall be successfully completed within _____from the date of Completion.
SCC 26. Completion Time Guarantee	SCC 26.2 Applicable rate for liquidated damages: _____ The above rate applies to the price of the part of the Facilities, as quoted in the Price Schedule, for that part for which the Contractor fails to achieve Completion within the particular Time for Completion. Maximum deduction for liquidated damages: _____ SCC 26.3 Applicable *(amount or rate)* for the bonus for early Completion: Maximum bonus: SCC 26.3 No bonus will be given for earlier Completion of the Facilities or part thereof.
SCC 27. Defect Liability	SCC 27.10 The critical components covered under the extended defect liability are _____, and the period shall be _____*(to be inserted **only** when an extended defect liability is requested)*.
SCC 30. Limitation of Liability	**Sample Clause** SCC 30.1 (b) The multiplier of the Contract Price is: _____
SCC 39. Value Engineering	SCC 39.1.2 If the value engineering proposal is approved by the Procuring Entity the amount to be paid to the Contractor shall be ___% (insert appropriate percentage. The percentage is normally up to 50%) of the reduction in the Contract Price
SCC 46.4(a)(ii) Arbitration	*[Insert rules of arbitration if different from those of the International Chamber of Commerce]*

SECTION VIII - CONTRACT FORMS

Notification of Award - Form of Acceptance

Contract Agreement

Appendix 1. Terms and Procedures of Payment

Appendix 2. Price Adjustment

Appendix 3. Insurance Requirements

Appendix 4. Time Schedule

Appendix 5. List of Major Items of Plant and Installation Services and List of Approved Subcontractors

Appendix 6. Scope of Works and Supply by the Procuring Entity

Appendix 7. List of Documents for Approval or Review

Appendix 8. Functional Guarantees

Performance Security Form OPTION 1 – Demand Bank Guarantee

Performance Security Form OPTION 2 – Performance Bond

Advance Payment Security- Demand Bank Guarantee

Beneficial Ownership Disclosure

1. NOTIFICATION OF INTENTION TO AWARD

[This Notification of Intention to Award shall be sent to each Tenderer that submitted a Tender.] [Send this Notification to the Tenderer's Authorized Representative named in the Tenderer Information Form]

1) For the attention of Tenderer's Authorized Representative Name .....*[insert Authorized Representative's name]*

Address: .....*[insert Authorized Representative's Address]*

Telephone/Fax numbers:.....*[insert Authorized Representative' s telephone /fax numbers]*

Email Address:..... *[insert Authorized Representative's email address]*

[IMPORTANT: insert the date that this Notification is transmitted to Tenderers. The Notification must be sent to all Tenderers simultaneously. This means on the same date and as close to the same time as possible.]

DATE OF TRANSMISSION: This Notification is sent by: *[email/fax] on [date] (local time)*

Notification of Intention to Award

Procuring Entity..... *[insert the name of the Procuring Entity]*

Project..... *[insert name of project]*

Contract title: .....*[insert the name of the contract]*

ITT No: .....*[insert ITT reference number from Procurement Plan]*

This Notification of Intention to Award (Notification) notifies you of our decision to award the above contract. The transmission of this Notification begins the Standstill Period. During the Standstill Period, you may:

a) Request a debriefing in relation to the evaluation of your Tender, and/or
b) Submit a Procurement-related Complaint in relation to the decision to award the contract.

2) The successful Tenderer

Name:	[*insert name of successful Tenderer*]
Address:	[*insert address of the successful Tenderer*]
Contract price:	[*insert contract price of the successful Tender*]

3) Other Tenderers *[INSTRUCTIONS: insert names of all Tenderers that submitted a Tender. If the Tender's price was evaluated include the evaluated price as well as the Tender price as read out.]*

Name of Tenderer	**Tender price**	**Evaluated Tender Cost**
[*insert name*]	[*insert Tender price*]	[*insert evaluated* **cost**]
[*insert name*]	[*insert Tender price*]	[*insert evaluated cost*]

[*insert name*]	[*insert Tender price*]	[*insert evaluated cost*]
[*insert name*]	[*insert Tender price*]	[*insert evaluated cost*]
[*insert name*]	[*insert Tender price*]	[*insert evaluated cost*]

4) Reason/s why your Tender was unsuccessful

*[**INSTRUCTIONS:** State the reasons/why this Tenderer's Tender was unsuccessful. Do NOT include: (a) appoint by point comparison with another Tenderer's Tender, or (b) information that is marked "Confidential" by the Tenderer in its Tender.]*

5) How to request a debriefing?

***DEADLINE:** The deadline to request a debriefing expires at midnight on [insert date] (local time).*

You may request a debriefing in relation to the results of the evaluation of your Tender. If you decide to request a debriefing, your written request must be made within three (3) Business Days of receipt of this Notification of Intention to Award.

Provide the contract name, reference number, name of the Tenderer, contact details; and address the request for debriefing as follows:

Attention:.....[insert full name of person, if applicable]

Title/position: ..... [insert title/position]

Agency.....[insert name of Procuring
Entity] Email address..... [insert email address]

Fax number..... [insert fax number] delete if not used

If your request for a debriefing is received within the 3 Business Days deadline, we will provide the debriefing within five (5) Business Days of receipt of your request. If we are unable to provide the debriefing within this period, the Standstill Period shall be extended by five (5) Business Days after the date that the debriefing is provided. If this happens, we will notify you and confirm the date that the extended Standstill Period will end.

The debriefing may be in writing, by phone, video conference call or in person. We shall promptly advise you in writing how the debriefing will take place and confirm the date and time.

If the deadline to request a debriefing has expired, you may still request a debriefing. In this case, we will provide the debriefing as soon as practicable, and normally no later than fifteen (15) Business Days from the date of publication of the Contract Award Notice.

6) How to make a complaint

Period: Procurement-related Complaint challenging the decision to award shall be submitted by midnight, [insert date] (local time).

Provide the contract name, reference number, name of the Tenderer, contact details; and address the Procurement- related Complaint as follows:

Attention:.....[insert full name of person, if applicable]

Title/position: ..... [insert title/position]

Agency.....[insert name of Procuring Entity]

Email address.....[insert email address]

Fax number..... [insert fax number] delete if not used

At this point in the procurement process, you may submit a Procurement-related Complaint challenging the decision to award the contract. You do not need to have requested, or received, a debriefing before making this complaint. Your complaint must be submitted within the Standstill Period and received by us before the Standstill Period ends.

Further information:

Further information: For more information refer to the Public Procurement and Disposals Act 2015 and its Regulations available from the Website: info@ppra.go.ke or complaints@ppra.go.ke.

In summary, there are four essential requirements:

1. *You must bean' interested party'. In this case, that means a Tenderer who submitted a Tender in this Tendering process, and is the recipient of a Notification of Intention to Award.*
2. *The complaint can only challenge the decision to award the contract.*
3. *You must submit the complaint within the period stated above.*
4. *You must include, in your complaint, all of the information required by the Procurement Regulations (as described in Annex III).*

7) Standstill Period

DEADLINE: *The Standstill Period is due to end at midnight on [insert date] (local time).*

The Standstill Period lasts ten (10) Business Days after the date of transmission of this Notification of Intention to Award.

The Standstill Period may be extended as stated in Section 4 above.

If you have any questions regarding this Notification please do not hesitate to contact us.
On behalf of the Procuring Entity:

Signature: _____

Name: _____

Title/position: _____

Telephone: _____

Email: _____

2. REQUEST FOR REVIEW

FORM FOR REVIEW(r.203(1))

PUBLIC PROCUREMENT ADMINISTRATIVE REVIEW BOARD

APPLICATION NO…….OF……..….20……...

BETWEEN

….....APPLICANT

AND

….....RESPONDENT (Procuring Entity)

Request for review of the decision of the…… (Name of the Procuring Entity of ……dated the…day of …….20…….in the matter of Tender No……..…of ……..20….. for..... (Tender description).

REQUEST FOR REVIEW

I/We……,the above named Applicant(s), of address: Physical address…….P. O. Box No……. Tel. No……..Email ..... , hereby request the Public Procurement Administrative Review Board to review the whole/part of the above mentioned decision on the following grounds , namely:

1.

2.

By this memorandum, the Applicant requests the Board for an order/orders that:

1.

2.

SIGNED …….(Applicant) Dated on…….day of ……/…20……

FOR OFFICIAL USE ONLY Lodged with the Secretary Public Procurement Administrative Review Board on.....day of ……....20….……

SIGNED

Board Secretary

3. LETTER OF AWARD

To:_____

This is to notify you that your Tender dated_____for execution of the_____for the Contract Price in the aggregate of_____, as corrected and modified in accordance with the Instructions to Tenderers is hereby accepted by our Agency.

You are requested to furnish the Performance Security within 28 days in accordance with the Conditions of Contract, using for that purpose one of the Performance Security Forms included in Section X, - Contract Forms, of the Tendering document.

Authorized Signature: .....

Name and Title of Signatory: .....

Name of Agency: .....

Attachment: Contract Agreement: .....

4. CONTRACT AGREEMENT

THIS AGREEMENT is made the_____day of_____,_____,
BETWEEN

1).....a corporation incorporated under the laws of_____and having its principal place of business at.....(hereinafter called "the Procuring Entity"), and (2)

_____, a corporation incorporated under the laws of_____and having its principal place of business at_____(herein after called "the Contractor").

WHEREAS the Procuring Entity desires to engage the Contractor to design, manufacture, test, deliver, install, complete and commission certain Facilities, viz._____("the Facilities"), and the Contractor has agreed to such engagement upon and subject to the terms and conditions herein after appearing.

NOW IT IS HEREBYAGREED as follows:

Article 1. Contract Documents

1.1 Contract Documents (Reference GCC Clause2)

The following documents shall constitute the Contract between the Procuring Entity and the Contractor, and each shall be read and construed as an integral part of the Contract:

a) This Contract Agreement and the Appendices hereto
b) Form of Tender and Price Schedules submitted by the Contractor
c) Special Conditions of Contract
d) General Conditions of Contract
e) Specification
f) Drawings
g) Other completed Tendering forms submitted with the Tender
h) Any other documents forming part of the Procuring Entity's Requirements
i) Any other documents shall be added here

1.2 Order of Precedence (Reference GCC Clause2)

In the event of any ambiguity or conflict between the Contract Documents listed above, the order of precedence shall be the order in which the Contract Documents are listed in Article1.1(Contract Documents) above.

1.3 Definitions (Reference GCC Clause1)
Capitalized words and phrases used here in shall have the same meanings as ascribed to them in the General Conditions.

Article 2. Contract Price and Terms of Payment

2.1 Contract Price (Reference GCC Clause11)

The Procuring Entity hereby agrees to pay to the Contractor the Contract Price in consideration of the performance by the Contractor of its obligations hereunder. The Contract Price shall be the aggregate of:

……..……as specified in Price Schedule No 5 (Grand Summary),

and_____,_____, or such other sums as may be determined in accordance with the terms and conditions of the Contract.

2.2 Terms of Payment (Reference GCC Clause 12)

The terms and procedures of payment according to which the Procuring Entity will reimburse the Contractor are given in the Appendix (Terms and Procedures of Payment) hereto.

The Procuring Entity may instruct its bank to issue an irrevocable confirmed documentary credit made available to the Contractor in a bank in the country of the Contractor. The credit shall be for an amount of

_____; and shall be subject to the Uniform Customs and Practice for Documentary Credits 2007 Revision, ICC Publication No.600.

In the event that the amount payable under Schedule No.1 is adjusted in accordance with GCC 11.2 or with any of the other terms of the Contract, the Procuring Entity shall arrange for the documentary credit to be amended accordingly.

Article 3. Effective Date

3.1 Effective Date (Reference GCC Clause1)

The Effective Date from which the Time for Completion of the Facilities shall be counted is the date when all of the following conditions have been fulfilled:

a) This Contract Agreement has been duly executed for and on behalf of the Procuring Entity and the Contractor;
b) The Contractor has submitted to the Procuring Entity the Performance Security and the advance payment guarantee;
c) The Procuring Entity has paid the Contractor the advance payment
d) The Contractor has been advised that the documentary credit referred to in Article 2.2 above has been issued in its favor.

Each party shall use its best efforts to fulfill the above conditions for which it is responsible as soon as practicable.

3.2 If the conditions listed under 3.1 are not fulfilled within two (2) months from the date of this Contract notification because of reasons not attributable to the Contractor, the Parties shall discuss and agree on an equitable adjustment to the Contract Price and the Time for Completion and/or other relevant conditions of the Contract.

Article 4. Communications

4.1 The address of the Procuring Entity for notice purposes, pursuant to GCC 4.1is:_____.
4.2 The address of the Contractor for notice purposes, pursuant to GCC 4.1is:_____.

Article 5. Appendices

5.1 The Appendices listed in the attached List of Appendices shall be deemed to form an integral part of this Contract Agreement.
5.2 Reference in the Contract to any Appendix shall mean the Appendices attached here to, and the Contract shall be read and construed accordingly.

IN WITNESS WHEREOF the Procuring Entity and the Contractor have caused this Agreement to be duly executed by their duly authorized representatives the day and year first above written.

Signed by, for and on behalf of the Procuring Entity

. .....*[Signature]*

. .....*[Title]*

in the presence of

Signed by, for and on behalf of the Contractor

. .....*[Signature]*

. .....*[Title]*

in the presence of

APPENDICES

APPENDIX 1: TERMS AND PROCEDURES OF PAYMENT

In accordance with the provisions of GCC Clause12 (Terms of Payment), the Procuring Entity shall pay the Contractor in the following manner and at the following times, on the basis of the Price Break down given in the section on Price Schedules. Payments will be made in the currencies quoted by the Tenderer unless otherwise agreed between the Parties. Applications for payment in respect of part deliveries may be made by the Contractor as work proceeds.

TERMS OF PAYMENT

Schedule No. 1. Plant and Equipment Supplied from Abroad

In respect of plant and equipment supplied from abroad, the following payments shall be made:

Ten percent (10%) of the total CIP amount as an advance payment against receipt of invoice and an irrevocable advance payment security for the equivalent amount made out in favor of the Procuring Entity. The advance payment security may be reduced in proportion to the value of the plant and equipment delivered to the site, as evidenced by shipping and delivery documents.

Eighty percent (80%)of the total or pro rata CIP amount upon Incoterm "CIP", upon delivery to the carrier within forty- five (45) days after receipt of documents.

Five percent (5%) of the total or pro rata CIP amount upon issue of the Completion Certificate, within forty-five (45) days after receipt of invoice.

Five percent (5%) of the total or pro rata CIP amount upon issue of the Operational Acceptance Certificate, within forty- five (45) days after receipt of invoice.

Schedule No. 2. Plant and Equipment Supplied from within Kenya

In respect of plant and equipment supplied from Kenya, the following payments shall be made:

Ten percent (10%) of the total EXW amount as an advance payment against receipt of invoice, and an irrevocable advance payment security for the equivalent amount made out in favor of the Procuring Entity. The advance payment security may be reduced in proportion to the value of the plant and equipment delivered to the site, as evidenced by shipping and delivery documents.

Eighty percent (80%) of the total or pro rata EXW amount upon Incoterm "Ex-Works," upon delivery to the carrier within forty-five (45) days after receipt of invoice and documents.

Five percent (5%) of the total or pro rata EXW amount upon issue of the Completion Certificate, within forty-five (45) days after receipt of invoice.

Five percent (5%) of the total or pro rata EXW amount upon issue of the Operational Acceptance Certificate, within forty-five (45) days after receipt of invoice.

Schedule No. 3. Design Services

In respect of design services for both the foreign currency and the local currency portions, the following payments shall be made:

Ten percent (10%) of the total design services amount as an advance payment against receipt of invoice, and an irrevocable advance payment security for the equivalent amount made out in favor of the Procuring Entity.

Ninety percent (90%) of the total or pro rata design services amount upon acceptance of design in accordance with GCC Clause 20 by the Project Manager within forty-five (45) days after receipt of invoice.

Schedule No. 4. Installation Services

In respect of installation services for both the foreign and local currency portions, the following payments shall be made:

Ten percent (10%) of the total installation services amount as an advance payment against receipt of invoice, and an irrevocable advance payment security for the equivalent amount made out in favor of the Procuring Entity. The advance payment security may be reduced in proportion to the value of work performed by the Contractor as evidenced by the invoices for installation services.

Eighty percent (80%) of the measured value of work performed by the Contractor, as identified in the said Program of Performance, during the preceding month, as evidenced by the Procuring Entity's authorization of the Contractor's application, will be made monthly within forty-five (45) days after receipt of invoice.

Five percent (5%) of the total or pro rata value of installation services performed by the Contractor as evidenced by the Procuring Entity's authorization of the Contractor's monthly applications, upon issue of the Completion Certificate, within forty-five (45) days after receipt of invoice.

Five percent (5%) of the total or pro rata value of installation services performed by the Contractor as evidenced by the Procuring Entity's authorization of the Contractor's monthly applications, upon issue of the Operational Acceptance Certificate, within forty-five (45) days after receipt of invoice.

In the event that the Procuring Entity fails to make any payment on its respective due date, the Procuring Entity shall pay to the Contractor interest on the amount of such delayed payment at the rate of _____

_____] percent (%) per month for period of delay until payment has been made in full.

PAYMENT PROCEDURES

The procedures to be followed in applying for certification and making payments shall be as follows:_____

APPENDIX 2. PRICE ADJUSTMENT

Where the Contract Period (excluding the Defects Liability Period) exceeds eighteen (18) months, it is normal procedure that prices payable to the Contractor shall be subject to adjustment during the performance of the Contract to reflect changes occurring in the cost of labor and material components. In such cases the Tendering document shall include in this Appendix 2 a formula of the following general type, pursuant to GCC Sub-Clause 11.2.

Where Contracts are of a shorter duration than eighteen (18) months or in cases where there is to be no Price Adjustment, the following provision shall not be included. Instead, it shall be indicated under this Appendix 2 that the prices are to remain firm and fixed for the duration of the Contract.

Sample Price Adjustment Formula

If in accordance with GCC 11.2, prices shall be adjustable, the following method shall be used to calculate the price adjustment:

Prices payable to the Contractor, in accordance with the Contract, shall be subject to adjustment during performance of the Contract to reflect changes in the cost of labor and material components, in accordance with the following formula:

$$P_1 = P_0 \Upsilon (a + b \frac{L_1}{L_0} + c \frac{M_1}{M_0}) - P_0$$

in which:

P_1 = adjustment amount payable to the Contractor

P_0 = Contract price (base price)

a = percentage of fixed element in Contract price (a = %)

b = percentage of labor component in Contract price (b= %)

c = percentage of material and equipment component in Contract price (c= %)

L_0, L_1 = labor indices applicable to the appropriate industry in the country of origin on the base date and the date for adjustment, respectively

M_0, M_1= material and equipment indices in the country of origin on the base date and the date for adjustment, respectively

N.B. a+b+c= 100%.

Conditions Applicable to Price Adjustment

The Tenderer shall indicate the source of labor and materials indices, source of exchange rates and the base date indices in its Tender.

Item Source of Indices Used Base Date Indices

The base date shall be the date twenty-eight (28) days prior to the Tender closing date.

The date of adjustment shall be the mid-point of the period of manufacture or installation of component or Plant.

The following conditions shall apply:

(a) No price increase will be allowed beyond the original delivery date unless covered by an extension of time awarded by the Procuring Entity under the terms of the Contract. No price increase will be allowed for periods of delay for which the Contractor is responsible. The Procuring Entity will, however, be entitled to any price decrease occurring during such periods of delay.

(b) If the currency in which the Contract price, P0, is expressed is different from the currency of the country of origin of the labor and/or materials indices, a correction factor will be applied to avoid incorrect adjustments of the Contract price. The correction factor shall be: Z0 / Z1, where,

Z_0 = the number of units of currency of the origin of the indices which equal to one unit of the currency of the Contract Price P_0 on the Base date, and

Z_1 = the number of units of currency of the origin of the indices which equal to one unit of the currency of the Contract Price P_0 on the Date of Adjustment.

(c) No price adjustment shall be payable on the portion of the Contract price paid to the Contractor as an advance payment.

APPENDIX 3. INSURANCE REQUIREMENTS

Insurances to be Taken Out by the Contractor

In accordance with the provisions of GCC Clause 34, the Contractor shall at its expense take out and maintain in effect, or cause to be taken out and maintained in effect, during the performance of the Contract, the insurances set forth below in the sums and with the deductibles and other conditions specified. The identity of the insurers and the form of the policies shall be subject to the approval of the Procuring Entity, such approval not to be unreasonably withheld.

a) Cargo Insurance

Covering loss or damage occurring, while in transit from the supplier's or manufacturer's works or stores until arrival at the Site, to the Facilities (including spare parts therefor) and to the construction equipment to be provided by the Contractor or its Subcontractors.

Amount Deductible Limits Parties insured from To

b) Installation All Risks Insurance

Covering physical loss or damage to the Facilities at the Site, occurring prior to completion of the Facilities, with an extended maintenance coverage for the Contractor's liability in respect of any loss or damage occurring during the defect liability period while the Contractor is on the Site for the purpose of performing its obligations during the defect liability period.

Amount Deductible Limits Parties insured from To

c) Third Party Liability Insurance

Covering bodily injury or death suffered by third parties (including the Procuring Entity's personnel) and loss of or damage to property (including the Procuring Entity's property and any parts of the Facilities that have been accepted by the Procuring Entity) occurring in connection with the supply and installation of the Facilities.

Amount Deductible Limits Parties insured from To

d) Automobile Liability Insurance

Covering use of all vehicles used by the Contractor or its Subcontractors (whether or not owned by them) in connection with the supply and installation of the Facilities. Comprehensive insurance in accordance with statutory requirements.

e) Workers' Compensation

In accordance with the statutory requirements applicable in any country where the Facilities or any part thereof is executed.

f) Procuring Entity's Liability

In accordance with the statutory requirements applicable in any country where the Facilities or any part thereof is executed.

g) Other Insurances

The Contractor is also required to take out and maintain at its own cost the following insurances:

Details:

Amount Deductible Limits Parties insured from To The Procuring Entity shall be named as co-insured under all insurance policies taken out by the Contractor pursuant to GCC Sub-Clause 34.1, except for the Third-Party Liability, Workers' Compensation and Procuring Entity's Liability Insurances, and the Contractor's Subcontractors shall be named as co-insureds under all insurance policies taken out by the Contractor pursuant to GCC Sub-Clause 34.1, except for the Cargo,

Workers' Compensation and Procuring Entity's Liability Insurances. All insurer's rights of subrogation against such co-insureds for losses or claims arising out of the performance of the Contract shall be waived under such policies.

Insurances to Be Taken Out by The Procuring Entity

The Procuring Entity shall at its expense take out and maintain in effect during the performance of the Contract the following insurances.

Details:

Amount Deductible Limits Parties insured from_____To_____

APPENDIX 4. TIME SCHEDULE

APPENDIX 5. LIST OF MAJOR ITEMS OF PLANT AND INSTALLATION SERVICES AND LIST OF APPROVED SUBCONTRACTORS

A list of major items of Plant and Installation Services is provided below.

The following Subcontractors and/or manufacturers are approved for carrying out the items of the Facilities indicated below. Where more than one Subcontractor is listed, the Contractor is free to choose between them, but it must notify the Procuring Entity of its choice in good time prior to appointing any selected Subcontractor. In accordance with GCC Sub-Clause 19.1, the Contractor is free to submit proposals for Subcontractors for additional items from time to time. No Subcontracts shall be placed with any such Subcontractors for additional items until the Subcontractors have been approved in writing by the Procuring Entity and their names have been added to this list of Approved Subcontractors.

Major Items of Plant and Installation Services	**Approved Subcontractors/Manufacturers**	**Nationality**

APPENDIX 6. SCOPE OF WORKS AND SUPPLY BY THE PROCURING ENTITY

The following personnel, facilities, works and supplies will be provided/supplied by the Procuring Entity, and the provisions of GCC Clauses 10, 21 and 24 shall apply as appropriate.

All personnel, facilities, works and supplies will be provided by the Procuring Entity in good time so as not to delay the performance of the Contractor, in accordance with the approved Time Schedule and Program of Performance pursuant to GCC Sub-Clause18.2.

Unless otherwise indicated, all personnel, facilities, works and supplies will be provided free of charge to the Contractor.

Personnel	Charge to Contractor (if any)
Facilities	Charge to Contractor (if any)
Works	Charge to Contractor (if any)
Supplies	Charge to Contractor (if any)

APPENDIX 7. LIST OF DOCUMENTS FOR APPROVAL OR REVIEW

Pursuant to GCC Sub-Clause 20.3.1, the Contractor shall prepare, or cause its Subcontractor to prepare, and present to the Project Manager in accordance with the requirements of GCC Sub-Clause 18.2 (Program of Performance), the following documents for

A. Approval

1.

2.

3.

B. Review

1.

2.

3.

APPENDIX 8. FUNCTIONAL GUARANTEES

1. General

This Appendix sets out

a) The functional guarantees referred to in GCC Clause 28 (Functional Guarantees)
b) The pre-conditions to the validity of the functional guarantees, either in production and/or consumption, set forth below
c) The minimum level of the functional guarantees
d) The formula for calculation of liquidated damages for failure to attain the functional guarantees.

2. Preconditions

The Contractor gives the functional guarantees (specified herein) for the facilities, subject to the following preconditions being fully satisfied:

_____

_____

3. Functional Guarantees

Subject to compliance with the foregoing preconditions, the Contractor guarantees as follows:

_____

3.1 Production Capacity

_____

_____

and/or _____

3.2 Raw Materials and Utilities Consumption

4. Failure in Guarantees and Liquidated Damages

4.1 Failure to Attain Guaranteed Production Capacity

If the production capacity of the facilities attained in the guarantee test, pursuant to GCC Sub-Clause 25.2, is less than the guaranteed figure specified in para. 3.1 above, but the actual production capacity attained in the guarantee test is not less than the minimum level specified in para. 4.3 below, and the Contractor elects to pay liquidated damages to the Procuring Entity in lieu of making changes, modifications and/or additions to the Facilities, pursuant to GCC Sub-Clause 28.3, then the Contractor shall pay liquidated damages at the rate of ..... for every complete one percent (1%) of the deficiency in the production capacity of the Facilities, or at a proportionately reduced rate for any deficiency, or part thereof, of less than a complete one percent (1%).

4.2 Raw Materials and Utilities Consumption in Excess of Guaranteed Level_____

If the actual measured figure of specified raw materials and utilities consumed per unit (or their average total cost of consumption) exceeds the guaranteed figure specified in para.3.2 above (or their specified average total cost of consumption), but the actual consumption attained in the guarantee test, pursuant to GCC Sub-Clause 25.2, is not more than the maximum level specified in para. 4.3 below, and the Contractor elects to pay liquidated damages to the Procuring Entity in lieu of making changes, modifications and/or additions to the Facilities pursuant to GCC Sub-Clause 28.3, then the Contractor shall pay liquidated damages at the rate

of [amount in the contract currency] for every complete one percent (1%) of the excess consumption of the Facilities, or part thereof, of less than a complete one percent (1%).

4.3 Minimum Levels

Notwithstanding the provisions of this paragraph, if as a result of the guarantee test(s), the following minimum levels of performance guarantees (and consumption guarantees) are not attained by the Contractor, the Contractor shall at its own cost make good any deficiencies until the Facilities reach any of such minimum performance levels, pursuant to GCC Sub-Clause 28.2:

a) production capacity of the Facilities attained in the guarantee test: ninety-five percent (95%) of the guaranteed production capacity (the values offered by the Contractor in its Tender for functional guarantees represents 100%).

and/or

b) average total cost of consumption of all the raw materials and utilities of the Facilities: one hundred and five percent (105%) of the guaranteed figures (the figures offered by the Contractor in its Tender for functional guarantees represents 100%).

4.4 Limitation of Liability

Subject to para.4.3 above, the Contractor's aggregate liability to pay liquidated damages for failure to attain the functional guarantees shall not exceed_____percent (_____%) of the Contract price.

PERFORMANCE SECURITY FORM

OPTION 1 – Demand Bank Guarantee

[Guarantor Form head or SWIFT identifier code]

Beneficiary:_____*[insert name and Address of Procuring*

Entity]

Date:_____*[Insert date of issue]*

PERFORMANCE GUARANTEE No.:_____*[Insert guarantee reference number]*

Guarantor:_____*[Insert name and address of place of issue, unless indicated in the Form head]*

We have been informed that_____(herein after called "the Applicant") has entered into Contract No. _____dated _____with the Beneficiary, for the execution of

_____(herein after called "the Contract").

Furthermore, we understand that, according to the conditions of the Contract, a performance guarantee is required.

At the request of the Applicant, we as Guarantor, hereby irrevocably undertake to pay the Beneficiary any sum or sums not exceeding in total an amount of_____(_____)[1],such sum being payable in the types and proportions of currencies in which the Contract Price is payable, upon receipt by us of the Beneficiary's complying demand supported by the Beneficiary's statement, whether in the demand itself or in a separate signed document accompanying or identifying the demand, stating that the Applicant is in breach of its obligation (s) under the Contract, without the Beneficiary needing to prove or to show grounds for your demand or the sum specified there in.

This guarantee shall be reduced by half upon our receipt of:

a) A copy of the Operational Acceptance Certificate; or
b) a registered Form from the Applicant (i) attaching a copy of its notice requesting issuance of the Operational Acceptance Certificate and (ii) stating that the Project Manager has failed to issue such Certificate within the time required or provide in writing justifiable reasons why such Certificate has not been issued, so that Operational Acceptance is deemed to have occurred.

This guarantee shall expire no later than the earlier of:[2]

a) twelve months after our receipt of either (a) or (b) above; or
b) eighteen months after our receipt of:
   i) a copy of the Completion Certificate; or
   ii) a registered Form from the Applicant, attaching a copy of the notice to the Project Manager that the Facilities are ready for commissioning, and stating that fourteen days have elapsed from receipt of such notice (or seven days have elapsed if the notice was a repeated notice) and the Project Manager has failed to issue a Completion Certificate or in form the Applicant in writing of any defects or deficiencies; or
   iii) a registered Form from the Applicant stating that no Completion Certificate has been issued but the Procuring Entity is making use of the Facilities; or

c) the_____day of ,2____.[3]

Consequently, any demand for payment under this guarantee must be received by us at this office on or before that date.

[1] *The Guarantor shall insert an amount representing the percentage of the Contract Price specified in the Contract and denominated either in the currency(ies) of the Contract or a freely convertible currency acceptable to the Procuring Entity.*

[2] *This text shall be revised as and where necessary to take into account (i) partial acceptance of the Facilities in accordance with Sub-Clause 25.4 of the GCC; and (ii) extension of the Performance Security when the Contractor is liable for an extended warranty obligation pursuant to Sub-Clause 27.10 of the GCC (although in this latter case the Procuring Entity might want to consider an extended warranty security in lieu of the extension of the Performance Security).*

This guarantee is subject to the Uniform Rules for Demand Guarantees (URDG) 2010 Revision, ICC Publication No.758, except that the supporting statement under Article15 (a) is hereby excluded.

_____

[signature(s)]

Note: *All italicized text (including footnotes) is for use in preparing this form and shall be deleted from the final product.*

[3] *Insert the date twenty-eight days after the expected expiration date of the Defect Liability Period. The Procuring Entity should note that in the event of an extension of the time for completion of the Contract, the Procuring Entity would need to request an extension of this guarantee from the Guarantor. Such request must be in writing and must be made prior to the expiration date established in the guarantee. In preparing this guarantee, the Procuring Entity might consider adding the following text to the form, at the end of the pen ultimate paragraph: "The Guarantor agrees to a one-time extension of this guarantee for a period not to exceed [six months] [one year], in response to the Procuring Entity's written request for such extension, such request to be presented to the Guarantor before the expiry of the guarantee."*

PERFORMANCE SECURITY OPTION 2 – (Performance Bond)

[Note: Procuring Entities are advised to use Performance Security–Unconditional Demand Bank Guarantee instead of Performance Bond due to difficulties involved in calling Bond holder to action]

[Guarantor Form head or SWIFT identifier code]

Beneficiary:_____*[insert name and Address of Procuring Entity]*

Date:_____*[Insert date of issue]*

PERFORMANCE BOND No.:_____

Guarantor:_____*[Insert name and address of place of issue, unless indicated in the Form head]*

1. By this Bond _____ as Principal (herein after called "the Contractor") and _____] as Surety (herein after called "the Surety"), are held and firmly bound unto_____] as Obliged (herein after called "the Procuring Entity") in the amount of_____for the payment of which sum well and truly to be made in the types and proportions of currencies in which the Contract Price is payable, the Contractor and the Surety bind themselves, their heirs, executors, administrators, successors and assigns, jointly and severally, firmly by these presents.
2. WHEREAS the Contractor has entered in to a written Agreement with the Procuring Entity dated the day of,20, for_____in accordance with the documents, plans, specifications, and amendments there to, which to the extent herein provided for, are by reference m a depart here of and are herein after referred to as the Contract.
3. NOW, THEREFORE, the Condition of this Obligation is such that, if the Contractor shall promptly and faithfully perform the said Contract (including any amendments there to), then this obligation shall be null and void; otherwise, it shall remain in full force and effect. Whenever the Contractor shall be, and declared by the Procuring Entity to be, in default under the Contract, the Procuring Entity having performed the Procuring Entity's obligations there under, the Surety may promptly remedy the default, or shall promptly:
    1) Complete the Contract in accordance with its terms and conditions; or
    2) Obtain a tender or tenders from qualified tenderers for submission to the Procuring Entity for completing the Contract in accordance with its terms and conditions, and upon determination by the Procuring Entity and the Surety of the lowest responsive Tenderers, arrange for a Contract between such Tenderer, and Procuring Entity and make available as work progresses (even though there should be a default or a succession of defaults under the Contract or Contracts of completion arranged under this paragraph) sufficient funds to pay the cost of completion less the Balance of the Contract Price; but not exceeding, including other costs and damages for which the Surety may be liable here under, the amount set for thin the first paragraph hereof. The term "Balance of the Contract Price," as used in this paragraph, shall mean the total amount payable by Procuring Entity to Contractor under the Contract, less the amount properly paid by Procuring Entity to Contractor; or
    3) Pay the Procuring Entity the amount required by Procuring Entity to complete the Contract in accordance with its terms and conditions up to a total not exceeding the amount of this Bond.
4. The Surety shall not be liable for a greater sum than the specified penalty of this Bond.
5. Any suit under this Bond must be instituted before the expiration of one year from the date of the issuing of the Taking-Over Certificate. No right of action shall accrue on this Bond to or for the use of any person or corporation other than the Procuring Entity named here in or the heirs, executors, administrators, successors, and assigns of the Procuring Entity.
6. In testimony whereof, the Contractor has hereunto set his hand and affixed his seal, and the Surety has caused these presents to be sealed with his corporate seal duly attested by the signature of his legal representative, this day_____of_____20_____.

SIGNED ON_____on behalf of

By_____in the capacity

of in the presence of

SIGNED ON_____on behalf of

By_____in the capacity

of in the presence of

ADVANCE PAYMENT SECURITY - Demand Bank Guarantee

[Guarantor Form head or SWIFT identifier code]

Beneficiary: _____ *[Name and Address of Procuring Entity]*

Date: _____ *[Insert date of issue]*

Advance Payment Guarantee No.: _____ *[Insert guarantee reference number]*

Guarantor: _____ *[Insert name and address of place of issue, unless indicated in the Form head]*

We have been informed that _____ (herein after called "the Applicant") has entered into Contract No. _____ dated _____ with the Beneficiary, for the execution of, _____ (herein after called "the Contract").

Furthermore, we understand that, according to the Conditions of the Contract, an advance payment in the sum (_____) is to be made against an advance payment guarantee.

At the request of the Applicant, we as Guarantor, hereby irrevocably undertake to pay the Beneficiary any sum or sums not exceeding in total an amount of (_____)[4] upon receipt by us of the Beneficiary's complying demand supported by the Beneficiary's statement whether in the demand itself or in a separate signed document accompanying or identifying the demand, stating either that the applicant:

a) Has used the advance payment for purposes other than the costs of mobilization in respect of the Facilities; or
b) has failed to repay the advance payment in accordance with the Contract conditions, specifying the amount which the Applicant has failed to repay.

A demand under this guarantee may be presented as from the presentation to the Guarantor of a certificate from the Beneficiary's bank stating that the advance payment referred to above has been credited to the Applicant on its account number _____ at _____.

The maximum amount of this guarantee shall be progressively reduced by the amount of the advance payment repaid by the Applicant as indicated in copies of interim statements or payment certificates which shall be presented to us. This guarantee shall expire, at the latest, upon our receipt of documentation indicating full repayment by the Applicant of the amount of the advance payment, or on the _____ day of _____, _____[5], whichever is earlier. Consequently, any demand for payment under this guarantee must be received by us at this office on or before that date.

This guarantee is subject to the Uniform Rules for Demand Guarantees (URDG) 2010 Revision, ICC Publication No. 758, except that the supporting statement under Article 15 (a) is hereby excluded.

_____ *[signature(s)]*

Note: *All italicized text (including footnotes) is for use in preparing this form and shall be deleted from the final product.*

[4] *The Guarantor shall insert an amount representing the amount of the advance payment and denominated either in the currency(ies) of the advance payment as specified in the Contract, or in a freely convertible currency acceptable to the Procuring Entity.*

[5] *Insert the expected expiration date of the Time for Completion. The Procuring Entity should note that in the event of an extension of the time for completion of the Contract, the Procuring Entity would need to request an extension of this guarantee from the Guarantor. Such request must be in writing and must be made prior to the expiration date established in the guarantee. In preparing this guarantee, the Procuring Entity might consider adding the following text to the form, at the end of the penultimate paragraph: "The Guarantor agrees to a one-time extension of this guarantee for a period not to exceed [six months] [one year], in response to the Beneficiary's written request for such extension, such request to be presented to the Guarantor before the expiry of the guarantee."*

BENEFICIAL OWNERSHIP DISCLOSURE FORM

(Amended and issued pursuant to PPRA CIRCULAR No. 02/2022)

INSTRUCTIONS TO TENDERERS: DELETE THIS BOX ONCE YOU HAVE COMPLETED THE FORM

This Beneficial Ownership Disclosure Form ("Form") is to be completed by the successful tenderer pursuant to Regulation 13 (2A) and 13 (6) of the Companies (Beneficial Ownership Information) Regulations, 2020. In case of joint venture, the tenderer must submit a separate Form for each member. The beneficial ownership information to be submitted in this Form shall be current as of the date of its submission.

For the purposes of this Form, a Beneficial Owner of a Tenderer is any natural person who ultimately owns or controls the legal person (tenderer) or arrangements or a natural person on whose behalf a transaction is conducted, and includes those persons who exercise ultimate effective control over a legal person (Tenderer) or arrangement.

Tender Reference No.:_____[*insert identification no*]

Name of the Tender Title/Description:_____*[insert name of the assignment]* to:

_____*[insert complete name of Procuring Entity]*

In response to the requirement in your notification of award dated__*[insert date of notification of award]* to furnish additional information on beneficial ownership:_____*[select one option as applicable and delete the options that are not applicable]*

I) We here by provide the following beneficial ownership information.

Details of beneficial ownership

	Details of all Beneficial Owners		**% of shares a person holds in the company Directly or indirectly**	**% of voting rights a person holds in the company**	**Whether a person directly or indirectly holds a right to appoint or remove a member of the board of directors of the company or an equivalent governing body of the Tenderer** (Yes / No)	**Whether a person directly or indirectly exercises significant influence or control over the Company (tenderer) (Yes / No)**
1.	Full Name		Directly---------- % of shares Indirectly---------- % of shares	Directly…… …….% of voting rights Indirectly---------- % of voting rights	1. Having the right to appoint a majority of the board of the directors or an equivalent governing body of the Tenderer: Yes -----No---- 2. Is this right held directly or	1. Exercises significant influence or control over the Company body of the Company (tenderer)
	National identity card number or Passport number					
	Personal Identification Number (where applicable)					
	Nationality					

					indirectly?:	

	Details of all Beneficial Owners		**% of shares a person holds in the company Directly or indirectly**	**% of voting rights a person holds in the company**	**Whether a person directly or indirectly holds a right to appoint or remove a member of the board of directors of the company or an equivalent governing body of the Tenderer** (Yes / No)	**Whether a person directly or indirectly exercises significant influence or control over the Company (tenderer) (Yes / No)**
	Date of birth *[dd/mm/yyyy]*				Direct…… …… Indirect…… ……...	Yes------No--- 2. Is this influence or control exercised directly or indirectly? Direct…… ….. Indirect…… …
	Postal address					
	Residential address					
	Telephone number					
	Email address					
	Occupation or profession					
2.	Full Name		Directly---------- % of shares Indirectly---------- % of shares	Directly…… …….% of voting rights Indirectly---------- % of voting rights	1. Having the right to appoint a majority of the board of the directors or an equivalent governing body of the Tenderer: Yes -----No---- 2. Is this right held directly or indirectly?: Direct…… …… Indirect…… ……...	1. Exercises significant influence or control over the Company body of the Company (tenderer) Yes ----- No--- 2. Is this influence or control exercised directly or indirectly? Direct…… ….. Indirect……
	National identity card number or Passport number					
	Personal Identification Number (where applicable)					
	Nationality(ies)					
	Date of birth *[dd/mm/yyyy]*					
	Postal address					
	Residential address					
	Telephone number					
	Email address					
	Occupation or profession					

						…
3.						

	Details of all Beneficial Owners		% of shares a person holds in the company Directly or indirectly	% of voting rights a person holds in the company	Whether a person directly or indirectly holds a right to appoint or remove a member of the board of directors of the company or an equivalent governing body of the Tenderer (Yes / No)	Whether a person directly or indirectly exercises significant influence or control over the Company (tenderer) (Yes / No)
e.t .c						

II) Am fully aware that beneficial ownership information above shall be reported to the Public Procurement Regulatory Authority together with other details in relation to contract awards and shall be maintained in the Government Portal, published and made publicly available pursuant to Regulation 13(5) of the Companies (Beneficial Ownership Information) Regulations, 2020.(Notwithstanding this paragraph Personally Identifiable Information in line with the Data Protection Act shall not be published or made public). *Note that Personally Identifiable Information (PII) is defined as any information that can be used to distinguish one person from another and can be used to deanonymize previously anonymous data. This information includes National identity card number or Passport number, Personal Identification Number, Date of birth, Residential address, email address and Telephone number.*

III) In determining who meets the threshold of who a beneficial owner is, the Tenderer must consider a natural person who in relation to the company:

(a) holds at least ten percent of the issued shares in the company either directly or indirectly;

(b) exercises at least ten percent of the voting rights in the company either directly or indirectly;

(c) holds a right, directly or indirectly, to appoint or remove a director of the company; or

(d) exercises significant influence or control, directly or indirectly, over the company.

IV) What is stated to herein above is true to the best of my knowledge, information and belief.

*Name of the Tenderer..... *[insert complete name of the Tenderer]*_____

*Name of the person duly authorized to sign the Tender on behalf of the Tenderer: ** [insert complete name of person duly authorized to sign the Tender]*

Designation of the person signing the Tender.....[insert complete title of the person signing the Tender]

Signature of the person named above ..... [insert signature of person whose name and capacity are shown above]

Bidder Official Stamp

