REPUBLIC OF KENYA

EMBU COUNTY GOVERNMENT

DEPARTMENT OF ROADS PUBLIC WORKS ENERGY, TRANSPORT, AND LOGISTICS.

PROJECT NAME:

CONSTRUCTION OF GITARAKA 2 TWIN-CELL BOX CULVERT- MWEA WARD

NEGOTIATION NO: 2699726-2027/2027

TENDR CLOSING DATE; 7TH DECEMBER, 2026

TIME: 11: 00AM

DECEMBER 2026

TABLE OF CONTENTS

PREFACE v

APPENDIX TO THE PREFACE vi

GUIDELINES FOR PREPARATION OFTENDER DOCUMENTS vi

PART 1 - TENDERING PROCEDURES vi
PART 2 - PROCUREMENT ENTITY'S REQUIREMENTS vii
PART 3 - CONDITIONS OF CONTRACT AND CONTRACT FORMS vii

INVITATION TO TENDER ..... **ix**

PART 1:TENDERING PROCEDURES 1

SECTION I – INSTRUCTIONS TO TENDERERS 1

GENERALPROVISIONS 1
1.0 Scope of tender 1
2.0 Fraud and corruption 1
3.0 Eligible tenderers 1
4.0 Eligible goods, equipment, and services 3
5.0 Tenderer's responsibilities 3

CONTENTS OFTENDER DOCUMENTS **3**

6.0 Sections of Tender Document 3
7.0 Clarification of Tender Document, Site Visit, Pre-tender Meeting 4
8.0 Amendment of Tender Documents 5
10.0 Language of Tender 5
11.0 Documents Comprising the Tender 5
12.0 Form of Tender and Schedules 5
13. AlternativeTenders 6
14.0 Tender Pricesand Discounts 6
15.0 Currencies of Tenderand Payment 6
16.0 Documents Comprising the Technical Proposal 7
17.0 Documents Establishing the Eligibility and Qualifications of the Tenderer 7
18.0 Period of Validity of Tenders 8
19.0 Tender Security 8

20.0 Format and Signing of Tender 9

SUBMISSION AND OPENING OF TENDERS 9

21.0 Sealing and Marking of Tenders 9
22.0 Deadline for Submission of Tenders 10
23.0 Late Tenders 10
24.0 Withdrawal, Substitution, and Modification of Tenders 10
Tender Opening 10

EVALUATION AND COMPARISON OF TENDERS 11

Confidentiality 11
27.0 Clarification of Tenders 11
29.0 Determination of Responsiveness 12
30.0 Non-material Non-conformities 12
31.0 Arithmetical Errors 12
33.0 Margin of Preference and Reservations 13
34.0 Nominated Subcontractors 13

35. Evaluation ofTenders 13
36.0 Comparison of tenders 14
37.0 Abnormally low tenders and abnormally high tenders 14
Abnormally LowTenders 14
Abnormally high tenders 14
38.0 Unbalanced and/or front-loaded tenders14
39.0 Qualifications of the tenderer 15
40.0 Lowest evaluated tender 15
41.0 Procuring entity's right to accept any tender, and to reject any or all tenders 15

AWARD OF CONTRACT 15

42.0 Award criteria 151
43.0 Notice of intention to enter into a contract 15
44.0 Standstill Period 16
44.0 Standstill Period 16
45.0 Debriefing by The Procuring Entity 16
46.0 Letter of Award 16
47.0 Signing of Contract 16
48.0 Performance Security 16
49.0 Publication of Procurement Contract 16
50.0 Procurement related Complaints and Administrative Review 17

SECTION II – TENDER DATA SHEET(TDS) **18**

SECTION III - EVALUATION AND QUALIFICATION CRITERIA **23**

General Provisions 23
Preliminary examination for Determination of Responsiveness 23
Tender Evaluation 23
Multiple Contracts 23
AlternativeTenders 24
Margin of Preference 24
Post qualification and Contract award 24
QUALIFICATION FORMS 28

SECTION IV –TENDERING FORMS **29**

1. FOREIGN TENDERERS40% RULE 30
Form EQU: EQUIPMENT 31
FORM PER -1 32
FORM PER- 2: 33
TENDERERS QUALIFICATION WITHOUT PRE-QUALIFICATION 35
FORM ELI -1.1 35
FORM ELI -1.2 36
FORM CON– 2 37
6.4 FORM FIN– 3.1: 39
6.5 FORM FIN– 3.2: 40
6.6 FORM FIN– 3.3: 41
6.7 FORM FIN– 3.4: 41
6.8 FORM EXP- 4.1 42

6.9 FORM EXP- 4.2 (a) 43
6.10 FORM EXP- 4.2 (b) 44

OTHER FORMS 46

FORM OFTENDER 46
TENDERER'S ELIGIBILITY- CONFIDENTIAL BUSINESS QUESTIONNAIRE 49
CERTIFICATE OF INDEPENDENT TENDER DETERMINATION 52
SELF-DECLARATION FORM - SELF DECLARATION OF THE TENDERER 53
APPENDIX 1- FRAUD AND CORRUPTION 55

FORM OF TENDER SECURITY – DEMAND BANK GUARANTEE 57
FORM OF TENDER SECURITY (INSURANCE GUARANTEE) 58
FORM OFTENDER-SECURING DECLARATION. 59
APPENDIXTOTENDER 60

TECHNICAL PROPOSAL FORMS 60

Site Organization 60
Method Statement 60
Mobilization Schedule 60
Construction Schedule 60

PART 2–WORKS' REQUIREMENTS **60**

SECTION V – BILL OF QUANTITIES 61
Preamble61
Work Items 61
Daywork Schedule 62
Provisional Quantities and Sums 62
Summary 63

SECTION VI- SPECIFICATIONS 72

SECTION VII- DRAWINGS 73

SUPPLEMENTARY INFORMATION 74

PART 3 – CONDITIONS OF CONTRACT AND CONTRACT FORMS **75**

SECTION VIII - GENERAL CONDITIONS OF CONTRACT 75

GENERAL CONDITIONS 76
THE PROCURING ENTITY 82
THE ENGINEER 83
THE CONTRACTOR 85
NOMINATED SUB CONTRACTORS 93
STAFFAND LABOR 94
Plant, Materials and Workmanship 97
COMMENCEMENT, DELAYS AND SUSPENSION 99
TESTS ON COMPLETION 102
Procuring Entity's Taking Over 103

Defects Liability 104
MEASUREMENT AND EVALUATION 106
VARIATIONS AND ADJUSTMENTS 108
Contract Price and Payment 112
TERMINATION BY PROCURING ENTITY 121
SUSPENSION AND TERMINATION BY CONTRACTOR 119
RISKAND RESPONSIBILITY 121
INSURANCE 123
FORCE MAJEURE 126
CLAIMS, DISPUTES AND ARBITRATION 128

SECTION IX - ARTICULAR CONDITIONS OF CONTRACT 131

SECTION X –CONTRACT FORMS 134

FORM No. 1 - NOTIFICATION OF INTENTION TO AWARD 135
FORM No. 2 – Request for review 137
FORM No. 3 – LETER OF AWARD 137
FORM No. 4 -CONTRACTAGREEMENT 138
FORM No. 5 - PERFORMANCE SECURITY [Option 1 - Unconditional Demand Bank Guarantee] 139
FORM No. 6 - PERFORMANCE SECURITY [Option 2–Performance Bond] 140
FORM No. 7 – ADVANCE PAYMENT SECURITY 141
FORM No. 8 – RETENTION MONEY SECURITY 143
FORM No. 9 – BENEFICIAL OWNERSHIP DISCLOSURE FORM 143

INVITATION TO TENDER **DATE: 23 /11/2026**

PROCURING ENTITY: EMBU COUNTY GOVERNMENT P.O. BOX 36 EMBU
CONTRACT NAME AND DESCRIPTION: CONSTRUCTION OF GITARAKA 2 TWIN-CELL BOX CULVERT- MWEA WARD - MWEA WARD

NEGOTIATION NO: 2699726-2026/2027

The Embu County Government invites sealed tenders for **CONSTRUCTION OF GITARAKA 2 TWIN-CELL BOX CULVERT- MWEA WARD - MWEA WARD**

Tendering will be conducted under an open competitive method (National) using a standardized tender document. Tendering is open to all qualified and interested Tenderers.

Interested eligible candidates may obtain further information and inspect the Tender documents at the office of the Director of the Supply Chain Management Office, during normal working hours.

A complete set of tender documents may be obtained by interested candidates free of charge at our website: www.embu.go.ke, www.tenders.go.ke, or from the Suppliers portal: www.supplier.treasury.go.ke. to facilitate any further clarification or addendum.

All Tenders must be accompanied by a correctly filled ***Tender - Securing Declaration Form in the tenderer's letterhead.***

The Tenderer shall be numerically serialized, initialized, and stamped all pages.
(Clarity on Serialization of Tender Documents by Prospective Bidders
Please note that all pages of the tender documents submitted by bidders shall be sequentially numbered, that is: 1, 2, 3, 4, 5, etc. The serialization shall be undertaken by the bidder by doing fresh numbering on its documents. The pagination of the tender documents as downloaded from the Embu County Government website should not be used as a means of Serialization. The bidder's serialization should follow the same logical sequence from the first page to the end.)

Eligible tenderers are required to **STRICTLY** respond through the E-procurement suppliers' portal: **www.supplier.treasury.go.ke** and submit the original completed tender document (same as the one submitted online) enclosed in a plain sealed envelope marked with Tender name and Negotiation number and deposited in the Tender Box at the reception in the County Headquarters offices on or before **7TH DECEMBER 2026 11.00** am.

In case of inconsistency between the bid document (hardcopy) submitted manually and the bid document submitted through the IFMIS System, the tenderer will be disqualified.

Tenders will be opened immediately after the deadline date and time specified above or any deadline date and time specified later. Tenders will be publicly opened in the presence of the Tenderers' designated representatives who choose to attend at a location as will be designated.

Late tenders will be rejected

This Project is funded by the **County Government of Embu, FY2026/2027**

There shall not be a pre-tender site visits as specified in the detailed tender notice.

Address for obtaining further information and for purchasing tender documents
Embu County Government
P.O.Box 36
Embu

Or

Hand Delivered to Tender Box at Embu County Government Procurement Office

NOTE: **Due diligence shall be carried out on all information provided.**
All interested bidders are required to continually check the Embu county website www.embu.go.ke for any tender addenda or clarification that may arise before the submission date

Director Supply Chain Management

For *COUNTY SECRETARY*

PART 1 - TENDERING PROCEDURES

SECTION I-INSTRUCTIONS TOTENDERERS

A GENERAL PROVISIONS

Scope of Tender

The Procuring Entity, as defined in the Appendix to Conditions of Contract, invites tenders for Works Contract as described in the tender documents. The name, identification, and number of lots (contracts) of this Tender Document are **specified in the TDS.**

Fraud and Corruption

The Procuring Entity requires compliance with the provisions of the Public Procurement and Asset Disposal Act, 2015, Section 62 "Declaration not to engage in corruption". The tender submitted by a person shall include a declaration that the person shall not engage in any corrupt or fraudulent practice and a declaration that the person or his or her sub-contractors are not debarred from participating in public procurement proceedings.

The Procuring Entity requires compliance with the provisions of the Competition Act 2010, regarding collusive practices in contracting. Any tenderer found to have engaged in collusive conduct shall be disqualified and criminal and/or civil sanctions may be imposed. To this effect, Tenders shall be required to complete and sign the "Certificate of Independent Tender Determination" annexed to the Form of Tender.

Tenderers shall permit and shall cause their agents (where declared or not), subcontractors, sub-consultants, service providers, suppliers, and their personnel, to permit the Procuring Entity to inspect all accounts, records and other documents relating to any initial selection process, pre-qualification process, tender submission, proposal submission, and contract performance (in the case of award), and to have them audited by auditors appointed by the Procuring Entity.

Unfair Competitive Advantage -Fairness and transparency in the tender process require that the firms or their Affiliates competing for a specific assignment do not derive a competitive advantage from having provided consulting services related to this tender. To that end, the Procuring Entity shall indicate in the **Data Sheet** and make available to all the firms together with this tender document all information that would in that respect give such firm any unfair competitive advantage over competing firms.

Eligible Tenderers

A Tenderer may be a firm that is a private entity, a state-owned enterprise or institution subject to ITT 3.8, or an individual or any combination of such entities in the form of a joint venture (JV) under an existing agreement or with the intent to enter into such an agreement supported by a letter of intent. In the case of a joint venture, all members shall be jointly and severally liable for the execution of the entire Contract in accordance with the Contract terms. The JV shall nominate a Representative who shall have the authority to conduct all business for and on behalf of any and all the members of the JV during the tendering process and, in the event the JV is awarded the Contract, during contract execution. Members of a joint venture may not also make an individual tender, be a subcontractor in a separate tender or be part of another joint venture for the purposes of the same Tender. The maximum number of JV members shall be specified in the **TDS.**

Public Officers of the Procuring Entity, their Spouses, Child, Parent, Brothers or Sister. Child, Parent, Brother or Sister of a Spouse, their business associates or agents and firms/organizations in which they have a substantial or controlling interest shall not be eligible to tender or be awarded a contract. Public Officers are also not allowed to participate in any procurement proceedings.

A Tenderer shall not have a conflict of interest. Any tenderer found to have a conflict of interest shall be disqualified. A tenderer may be considered to have a conflict of interest for the purpose of this tendering process, if the tenderer:

Directly or indirectly controls, is controlled by or is under common control with another tenderer; or

Receives or has received any direct or indirect subsidy from another tenderer; or

Has the same legal representative as another tenderer; or

Has a relationship with another tenderer, directly or through common third parties, that puts it in a position to influence the tender of another tenderer, or influence the decisions of the Procuring Entity regarding this tendering process; or

Any of its affiliates participated as a consultant in the preparation of the design or technical specifications of the goods or works that are the subject of the tender; or

any of its affiliates has been hired (or is proposed to be hired) by the Procuring Entity as a consultant for Contract implementation; or

Would be providing goods, works, or non-consulting services resulting from or directly related to consulting services for the preparation or implementation of the contract specified in this Tender Document; or

Has a close business or personal elationship with senior management or professional staff of the Procuring Entity who has the ability to influence the bidding process and:
are directly or indirectly involved in the preparation of the Tender document or specifications of the Contract, and/or the Tender evaluation process of such contract; or
may be involved in the implementation or supervision of such Contract unless the conflict stemming from such relationship has been resolved in a manner acceptable to the Procuring Entity throughout the tendering process and execution of the Contract.

A tenderer shall not be involved incorrupt, coercive, obstructive or fraudulent practice. A tenderer that is proven to have been involved in any of these practices shall be automatically disqualified.

A Tenderer (either individually or as a JV member) shall not participate in more than one Tender, except for permitted alternative tenders. This includes participation as a subcontractor in other Tenders. Such participation shall result in the disqualification of all Tenders in which the firm is involved. Members of a joint venture may not also make an individual tender, be a subcontractor in a separate tender or be part of another joint venture for the purposes of the same Tender. A firm that is not a tenderer or a JV member may participate as a subcontractor in more than one tender.

A Tenderer may have the nationality of any country, subject to the restrictions pursuant to ITT3.9. A Tenderer shall be deemed to have the nationality of a country if the Tenderer is constituted, incorporated or registered in and operates inconformity with the provisions of the laws of that country, as evidenced by its articles of incorporation (or equivalent documents of constitution or association) and its registration documents, as the case may be. This criterion also shall apply to the determination of the nationality of proposed subcontractors or sub-consultants for any part of the Contract including related Services.

A Tenderer that has been debarred from participating in public procurement shall be ineligible to tender or be awarded a contract. The list of debarred firms and individuals is available from the website of PPRA www.ppra.go.ke.

A Tenderer that is a state-owned enterprise or a public institution in Kenya may be eligible to tender and be awarded a Contract(s) only if it is determined by the Procuring Entity to meet the following conditions, i.e. if it is:
A legal public entity of Government and/or public administration,
financially autonomous and not receiving any significant subsidies or budget support from any public entity or Government, and
operating under commercial law and vested with legal rights and liabilities similar to any commercial enterprise to enable it compete with firms in the private sector on an equal basis.

Firms and individuals shall be ineligible if their countries of origin are:

as a matter of law or official regulations, Kenya prohibits commercial relations with that country, or

by an act of compliance with a decision of the United Nations Security Council taken under Chapter VII of the Charter of the United Nations, Kenya prohibits any import of goods or contracting of works or services from that country, or any payments to any country, person, or entity in that country.

A tenderer shall provide such documentary evidence of eligibility satisfactory to the Procuring Entity, as the Procuring Entity shall reasonably request.

Foreign tenderers are required to source at least forty (40%) percent of their contract inputs (in supplies, local subcontracts and labor) from citizen suppliers and contractors. To this end, a foreign tenderer shall provide inits tender documentary evidence that this requirement is met. Foreign tenderers not meeting this criterion will be automatically disqualified. Information required to enable the Procuring Entity determine if this condition is met shall be provided for this purpose in *"SECTION III-EVALUATION AND QUALIFICATION CRITERIA, Item 9"*.

Pursuant to the eligibility requirements of ITT4.10, a tender is considered a foreign tenderer, if the tenderer is not registered in Kenya or if the tenderer is registered in Kenya and has less than 51 percent ownership by Kenyan citizens. JVs are considered as foreign tenderers if the individual member firms are not registered in Kenya or if are registered in Kenya and have less than 51 percent ownership by Kenyan citizens. The JV shall not subcontract to foreign firms

more than 10 percent of the contract price, excluding provisional sums.

The National Construction Authority Act of Kenya requires that all local and foreign contractors be registered with the National Construction Authority and be issued with a Registration Certificate before they can undertake any construction works in Kenya. Registration shall not be a condition for tender, but it shall be a condition of contract award and signature. A selected tenderer shall be given opportunity to register before such award and signature of contract. Application for registration with National Construction Authority may be accessed from the website www.nca.go.ke.

The Competition Act of Kenya requires that firms wishing to tender as Joint Venture undertakings which may prevent, distort or lessen competition in provision of services are prohibited unless they are exempt in accordance with the provisions of Section 25 of the Competition Act, 2010. JVs will be required to seek for exemption from the Competition Authority. Exemption shall not be a condition for tender, but it shall be a condition of contract award and signature. A JV tenderer shall be given opportunity to seek such exemption as a condition of award and signature of contract. Application for exemption from the Competition Authority of Kenya may be accessed from the website www.cak.go.ke.

4.14 A Kenyan tenderer shall be eligible to tender if it provides evidence of having fulfilled his/her tax obligations by producing a valid tax compliance or valid tax certificate issued by the Kenya Revenue Authority.

Eligible Goods, Equipment, and Services

Goods, equipment and services to be supplied under the Contract may have their origin in any country that is not ineligible under ITT3.9. At the Procuring Entity's request, Tenderers may be required to provide evidence of the origin of Goods, equipment and services.

Any goods, works and production processes with characteristics that have been declared by the relevant national environmental protection agency or by other competent authority as harmful to human beings and to the environment shall not be eligible for procurement.

Tenderer's Responsibilities

The tenderer shall bear all costs associated with the preparation and submission of his/her tender, and the Procuring Entity will in no case be responsible or liable for those costs.

The tenderer, at the tenderer's own responsibility and risk, is encouraged to visit and examine and inspect the Site of the Works and its surroundings and obtain all information that may be necessary for preparing the tender and entering into a contract for construction of the Works. The costs of visiting the Site shall be at the tenderer's own expense.

The Tenderer and any of its personnel or agents will be granted permission by the Procuring Entity to enter up on its premises and lands for the purpose of such visit. The Tenderer shall indemnify the Procuring Entity against all liability arising from death or personal injury, loss of or damage to property, and any other losses and expenses incurred as a result of the examination and inspection.

The tenderer shall provide in the Form of Tender and Qualification Information, a preliminary description of the proposed work method and schedule, including charts, as necessary or required.

B. CONTENTS OF TENDER DOCUMENTS

Sections of Tender Document

The tender document consists of Parts 1, 2, and 3, which includes all the sections specified below, and which should be read in conjunction with any Addenda issued in accordance with ITT10.

PART 1: **Tendering Procedures** Section
I: Instructions to Tenderers Section II:
Tender Data Sheet (TDS)

Section III: Evaluation and Qualification Criteria
Section IV: Tendering Forms

PART 2: **Works' Requirements**
Section V: Bills of Quantities Section
VI: Specifications Section VII:
Drawings

PART3: **Conditions of Contract and Contract Forms**
Section VIII: General Conditions (GCC) Section IX:
Particular Conditions of Contract Section X: Contract Forms

The Invitation toTender Notice issued by the Procuring Entity is not part of the Contract documents.

Unless obtained directly from the Procuring Entity, the Procuring Entity is not responsible for the completeness of the Tender document, responses to requests for clarification, the minutes of a pre-arranged site visit and those of the pre-Tender meeting (if any), or Addenda to the Tender document in accordance with ITT 10. In case of any contradiction, documents obtained directly from the Procuring Entity shall prevail.

The Tenderer is expected to examine all instructions, forms, terms, and specifications in the Tender Document and tofurnish with its Tender all information and documentation as is required by the Tender document.

Clarification of Tender Document, Site Visit, Pre-Tender Meeting

ATenderer requiring any clarification of the Tender Document shall contact the Procuring Entity in writing at the Procuring Entity's address **specified in the TDS** or raise its enquiries during the pre-Tender meeting if provided for in accordance with ITT 7.2. The Procuring Entity will respond in writing to any request for clarification, provided that such request is received no later than the period specified in the **TDS p**rior to the deadline for submission of tenders. The Procuring Entity shall forward copies of its response to all tenderers who have acquired the Tender D documents in accordance with ITT 7.4, including a description of the inquiry but without identifying its source. If so specified **in the TDS**, the Procuring Entity shall also promptly publish its response at the web page identified in the **TDS**. Should the clarification result in changes to the essential elements of the Tender Documents, the Procuring Entity shall amend the Tender Documents following the procedure under ITT 8 and ITT 22.2.

The Tenderer, at the Tenderer's own responsibility and risk, is encouraged to visit and examine and inspect the site(s) of the required contracts and obtain all information that may benecessary for preparing a tender. The costs of visiting the Site shall be at theTenderer's own expense. The Procuring Entity shall specify in the **TDS** if a pre- arranged Site visit and or a pre-tender meeting will be held, when and where. The Tenderer's designated representative is invited to attend a pre-arranged site visit and a pre-tender meeting, as the case may be. The purpose of the site visit and the pre-tender meeting will be to clarify issues and to answer questions on any matter that may be raised at that stage.

The Tenderer is requested to submit any questions in writing, to reach the Procuring Entity not later than the period specified in the **TDS** before the meeting.

Minutes of a pre-arranged site visit and those of the pre-tender meeting, if applicable, including the text of the questions asked by Tenderers and the responses given, together with any responses prepared after the meeting, will be transmitted promptly to all Tenderers who have acquired theTender Documents. Minutes shall not identify the source of the questions asked.

The Procuring Entity shall also promptly publish anonymized (*no names*) Minutes of the pre-arranged site visit and those of the pre-tender meeting at the web page identified **in the TDS**. Any modification to the Tender Documents that may become necessary as a result of the pre-arranged site visit and those of the pre-tender meeting shall be made by the Procuring Entity exclusively through the issue of an Addendum pursuant to ITT 8 and not through the minutes of the pre-Tender meeting. Non-attendance at the pre-arranged site visit and the pre-tender meeting will not be a cause for disqualification of a Tenderer.

Amendment of Tender Documents

At any time prior to the deadline for submission of Tenders, the Procuring Entity may amend the Tender Documents by issuing addenda.

Any addendum issued shall be part of the Tender Documents and shall be communicatedinwritingtoall whohave obtained the Tender Documents from the Procuring Entity. The Procuring Entity shall also promptly publish the addendum on the Procuring Entity's website in accordance with ITT 7.5.

To give Tenderers reasonable time in which to take an addendum into account in preparing their Tenders, the Procuring Entity should extend the deadline for the submission of Tenders, pursuant to ITT 22.2.

C. PREPARATION OF TENDERS

Cost of Tendering

The Tenderer shall meet all costs associated with the preparation and submission of its Tender, and the Procuring Entity shall not be responsible or liable for those costs, regardless of the conduct or outcome of the tendering process.

Language of Tender

The Tender, as well as all correspondence and documents relating to the tender exchanged by the tenderer and the Procuring Entity, shall be written in the English Language. Supporting documents and printed literature that are part of the Tender may be in another language, provided they are accompanied by an accurate and notarized translation of the relevant passages into the English Language**,** in which case, for purposes of interpretation of the Tender, such translation shall govern.

Documents Comprising the Tender

The Tender shall comprise the following:

Form of Tender prepared in accordance with ITT 12;

Schedules including priced Bill of Quantities, completed in accordance with ITT 12 and ITT 14;

Tender Security or Tender-Securing Declaration, in accordance with ITT 19.1;

Alternative Tender, if permissible, in accordance with ITT 13;

Authorization: written confirmation authorizing the signatory of the Tender to commit the Tenderer, in accordance with ITT 20.3;

Qualifications: documentary evidence in accordance with ITT 17 establishing the Tenderer's qualifications to perform the Contract if its Tender is accepted;

Conformity: a technical proposal in accordance with ITT 16;

Any other document required in the **TDS**.

In addition to the requirements under ITT 11.1, Tenders submitted by a JV shall include a copy of the Joint Venture Agreement enteredinto by all members. Alternatively, a letter of intent to execute a Joint Venture Agreement in the event of a successful Tender shall be signed by all members and submitted with the Tender, together with a copy of the proposed JV Agreement. Change of membership and conditions of the JV prior to contract signature will render the tender liable for disqualification.

Form of Tender and Schedules

The Form of Tender and Schedules, including the Bill of Quantities, shall be prepared using the relevant forms furnished in Section IV, Tendering Forms. The forms must be completed without any alterations to the text, and no substitutes shall be accepted except as provided under ITT 20.3. All blank spaces shall be filled in with the information requested. The Tenderer shall chronologically serialize all pages of the tender documents submitted.

The Tenderer shall furnish in the Form of Tender information on commissions and gratuities, if any, paid or to be paid to agents or any other party relating to this Tender.

Alternative Tenders

Unless otherwise specified in the TDS, alternative Tenders shall not be considered.

When alternative times for completion are explicitly invited, a statement to that effect will be included in the **TDS**, and the method of evaluating different alternative times for completion will be described in Section III, Evaluation and Qualification Criteria.

Except as provided under ITT13.4 below, Tenderers wishing to offer technical alternatives to the requirements of the Tender Documents must first price the Procuring Entity's design as described in the Tender Documents and shall further provide all information necessary for a complete evaluation of the alternative by the Procuring Entity, including drawings, design calculations, technicalspecifications, breakdown of prices, and proposed construction methodology and other relevant details. Only the technical alternatives, if any, of the Tenderer with the Winning Tender conforming to the basic technical requirements shall be considered by the Procuring Entity.

When specified in the **TDS**, Tenderers are permitted to submit alternative technical solutions for specified parts of the Works, and such parts will be identified in the **TDS**, as will the method for their evaluating, and described in Section VII, Works' Requirements.

Tender Prices and Discounts

The prices and discounts (including any price reduction) quoted by the Tenderer in the Form of Tender and in the Bill of Quantities shall conform to the requirements specified below.

The Tenderer shall fill in rates and prices for all items of the Works described in the Bill of Quantities. Items against which no rate or price is entered by the Tenderer shall be deemed covered by the rates for other items in the Bill of Quantities and will not be paid for separately by the Procuring Entity. An item not listed in the priced Bill of Quantities shall be assumed to be not included in the Tender, and provided that the Tender is determined substantially responsive notwithstanding this omission, the average price of the item quoted by substantially responsive Tenderers will be added to the Tender price and the equivalent total cost of the Tender so determined will be used for price comparison.

The price to be quoted in the Form of Tender, in accordance with ITT 12, shall be the total price of the Tender, including any discounts offered.

The Tenderer shall quote any discounts and the methodology for their application in the Form of Tender, in accordance with ITT 12

It will be specified in the **TDS** if the rates and prices quoted by the Tenderer are or are not subject to adjustment during the performance of the Contract in accordance with the provisions of the Conditions of Contract, exceptin cases where the contract is subject to fluctuations and adjustments, not fixed price. In such a case, the Tenderer shall furnish the indices and weightings for the price adjustment formulae in the Schedule of Adjustment Data and the Procuring Entity may require the Tenderer to justify its proposed indices and weightings.

Where tenders are being invited for individual lots (contracts) or for any combination of lots (packages), tenderers wishing to offer discounts for the award of more than one Contract shall specify in their Tender the price reductions applicable to each package, or alternatively, to individual Contracts within the package. Discounts shall be submitted in accordance with ITT 14.4, provided the Tenders for all lots (contracts) are opened at the same time.

All duties, taxes, and other levies payable by the Contractor under the Contract, or for any other cause, as of the date 30 days prior to the deadline for submission of Tenders, shall be included in the rates and prices and the total Tender Price submitted by the Tenderer.

Currencies of Tender and Payment

The currency (ies) of the Tender and the currency (ies) of payments shall be the same**.**

Tenderers shall quote entirely in Kenya Shillings. The unit rates and the prices shall be quoted by the Tenderer in the Bill of Quantities, entirely in Kenya shillings

A Tenderer expecting to incur expenditures in other currencies for inputs to the Works supplied from outside Kenya (referred to as “the foreign currency requirements”) shall (if so allowed in the **TDS**) indicate in the Appendix to Tender the percentage(s) of the Tender Price (excluding Provisional Sums), needed by the Tenderer for the payment of such foreign currency requirements, limited to no more than two foreign currencies.

The rates of exchange to be used by the Tenderer in arriving at the local currency equivalent and the percentage(s) mentioned in (a) above shall be specified by the Tenderer in the Appendix to Tender and shall be based on the exchange rate provided by the Central Bank of Kenya on the date 30 days prior to the actual date of tender opening. Such exchange rate shall apply for all foreign payments under the Contract.

Tenderers may be required by the Procuring Entity to justify, to the Procuring Entity's satisfaction, their local and foreign currency requirements, and to substantiate that the amounts included in the unit rates and prices and shown in the Schedule of Adjustment Data in the Appendix to Tender are reasonable, in which case a detailed breakdown of the foreign currency requirements shall be provided byTenderers.

Documents Comprising the Technical Proposal

The Tenderer shall furnish a technical proposal including a statement of work methods, equipment, personnel, schedule and any other information as stipulated in Section IV, Tender Forms, in sufficient detail to demonstrate the adequacy of the Tenderer's proposal to meet the work's requirements and the completion time.

Documents Establishing the Eligibility and Qualifications of theTenderer

Tenderers shall complete the Form of Tender, included in Section IV, Tender Forms, to establish Tenderer's eligibility in accordance with ITT 4.

In accordance with Section III, Evaluation and Qualification Criteria, to establish its qualifications to perform the Contract the Tenderer shall provide the information requested in the corresponding information sheets included in Section IV, Tender Forms.

If a margin of preference applies as specified in accordance with ITT33. 1, national tenderers, individually or in joint ventures, applying for eligibility fornational preference shall supply all information required to satisfy the criteria for eligibility specified in accordance with ITT 33.1.

Tenderers shall be asked to provide, as part of the data for qualification, such information, including details of ownership, as shall be required to determine whether, according to the classification established by the Procuring Entity, a particular contract or or group of contractors qualifies for a margin of preference. Further the information will enable the Procuring Entity identify any actual or potential conflict of interest in relation to the procurement and/or contract management processes, orapossibility of collusion between tenderers, and there by help to prevent any corrupt influence in relation to the procurement process or contract management.

The purpose of the information described **in ITT 17.2** above overrides any claims to confidentiality which a tenderer may have. There can be no circumstances in which it would be justified for a tenderer to keep information relating to its ownership and control confidential where it is tendering to undertake public sector work and receive public sector funds. Thus, confidentiality will not be accepted by the Procuring Entity as a justification for a Tenderer's failure to disclose, or failure to provide required information on its ownership and control.

The Tenderer shall provide further documentary proof, information or authorizations that the Procuring Entity may request in relation to ownership and control which information on any changes to the information which was provided by the tenderer under ITT 6.4. The obligations to require this information shall continue for the duration of the procurement process and contract performance and after completion of the contract, if any change to the information previously provided may reveal a conflict of interest in relation to the award or management of the contract.

All information provided by the tenderer pursuant to these requirements must be complete, current and accurateas at the date of provision to the Procuring Entity. In submitting the information required pursuant to these requirements, theTenderer shall warrant that the information submitted is complete, current and accurate as at the date of submission to the Procuring Entity.

If a tenderer fails to submit the information required by these requirements, its tenderer will be rejected. Similarly, if the Procuring Entity is unable, after taking reasonable steps, to verify to a reasonable degree the information submitted by a tenderer pursuant to these requirements, then the tender will be rejected.

If information submitted by a tenderer pursuant to these requirements, or obtained by the Procuring Entity (whether through its own enquiries, through notification by the public or otherwise), shows any conflict of interest which could materially and improperly benefit the tenderer in relation to the procurement or contract management process, then:
If the procurement process is still on going, the tenderer will be disqualified from the procurement process,
If the contract has been awarded to that tenderer, the contract award will be set aside,
The tenderer will be referred to the relevant law enforcement authorities for investigation of whether the tenderer or any other persons have committed any criminal offence.

If a tenderer submits information pursuant to these requirements that is incomplete, inaccurate or out-of-date, or attempts to obstruct the verification process, then the consequences ITT 17.8 will ensue unless the tenderer can show to the reasonable satisfaction of the Procuring Entity that any such act was not material, or was due to genuine error which was not attributable to the intentional act, negligence or recklessness of the tender.

Period of Validity of Tenders

18.1. Tenders shall remain valid for the Tender Validity period specified in the **TDS**. The Tender Validity periodstarts from the date fixed for the Tender submission deadline (as prescribed by the Procuring Entity in accordance with ITT 22). A Tender valid for a shorter period shall be rejected by the Procuring Entity as non-responsive.

18.2 In exceptional circumstances, prior to the expiration of the Tender validity period, the Procuring Entity may request Tenderers to extend the period of validity of their Tenders. The request and the responses shall be made in writing. If a Tender Security is requested in accordance with ITT 19, it shall also be extended for thirty (30) days beyond the deadline of the extended validity period. A Tenderer may refuse the request without forfeiting its Tender security. A Tenderer granting its quest shall not be required or permitted to modify its Tender.

Tender Security

The Tenderer shall furnish as part of its Tender either a Tender-Securing Declaration or a Tender Security as specified in the **TDS**, in original form and, in the case of a Tender Security, in the amount and currency **specified in the TDS**. A Tender-Securing Declaration shall use the form included in Section IV, Tender Forms.

If a Tender Security is specified pursuant to ITT19.1, the Tender Security shall be a demand guarantee in any of the following forms at the Tenderer's option:
cash;
a bank guarantee;
a guarantee by an insurance company registered and licensed by the Insurance Regulatory Authority listed by the Authority; or
a guarantee issued by a financial institution approved and licensed by the Central Bank of Kenya, from a reputable source, and an eligible country.

If an unconditional bank guarantee is issued by a bank located outside Kenya, the issuing bank shall have a correspondent bank located in Kenya to make it enforceable. The Tender Security shall be valid for thirty (30) days beyond the original validity period of the Tender, or beyond any period of extension if requested under ITT 18.2.

If a Tender Security or Tender-Securing Declaration is specified pursuant to ITT 19.1, any Tender not accompanied by a substantially responsive Tender Security or Tender-Securing Declaration shall be rejected by the Procuring Entity as non-responsive.

If a Tender Security is specified pursuant to ITT 19.1, the Tender Security of unsuccessful Tenderers shall be returned as promptly as possible upon the successful Tenderer's signing the Contract and furnishing the Performance Security and any other documents required in the **TDS**.The Procuring Entity shall also promptly return the tender security to the tenderers where the procurement proceedings are terminated, all tenders were determined non-responsive or a bidder declines to extend tender validity period.

The Tender Security of the successful Tenderer shall be returned as promptly as possible once the successful Tenderer has signed the Contract and furnished the required Performance Security, and any other documents required in the **TDS**.

The Tender Security may be forfeited or the Tender-Securing Declaration executed:

if a Tenderer withdraws its Tender during the period of Tender validity specified by the Tenderer on the Form of Tender, or any extension there to provided by the Tenderer; or

if the successful Tenderer fails to:

sign the Contract in accordance with ITT 47; or

furnish a Performance Security and if required in the **TDS**, and any other documents required in the **TDS.**

Where tender securing declaration is executed, the Procuring Entity shall recommend to the PPRA that PPRA debars the Tenderer from participating in public procurement as provided in the law.

The Tender Security or the Tender-Securing Declaration of a JV shall be in the name of the JV that submits the Tender. If the JV has not been legally constituted into a legally enforceable JV at the time of tendering, the Tender SecurityortheTender-Securing Declaration shall be in the names of all future members as named in the letter of intent referred to in ITT 4.1 and ITT 11.2.

A tenderer shall not issue a tender security to guarantee itself.

Format and Signing of Tender

The Tenderer shall prepare one original of the documents comprising the Tender as described in ITT 11 and clearly mark it "ORIGINAL." Alternative Tenders, if permitted in accordance with ITT 13, shall be clearly marked "ALTERNATIVE." Inaddition, the Tenderer shall submit copies of the Tender, in the number **specified in the TDS** and clearly mark them "COPY." In the event of any discrepancy between the original and the copies, the original shall prevail.

Tenderers shall mark as "CONFIDENTIAL" all information in their Tenders which is confidential to their business. This may include proprietary information, trade secrets, or commercial or financially sensitive information.

The original and all copies of the Tender shall be typed or written in indelible ink and shall besigned by a person duly authorized to sign on behalf of the Tenderer. This authorization shall consist of a written confirmation as specified in the **TDS** and shall be attached to the Tender. The name and position held bye ach person signing the authorization must be typed or printed below the signature. All pages of the Tender where entries or amendments have been made shall be signed or initialed by the person signing the Tender.

In case the Tenderer is a JV, the Tender shall be signed by an authorized representative of the JV on behalf of the JV, and so as to be legally binding on all the members as evidenced by a power of attorney signed by their legally authorized representatives.

Any inter-lineation, erasures, or overwriting shall be valid only if they are signed or initialed by the person signing theTender.

D. SUBMISSION AND OPENING OF TENDERS

Sealing and Marking of Tenders

The Tenderer shall deliver the Tender in a single sealed envelope, or in a single sealed package, or in a single sealed container bearing the name and Reference number of the Tender, addressed to the Procuring Entity and a warning not to open before the time and date for Tender opening date. Within the single envelope, package or container, the Tenderer shall place the following separate, sealed envelopes:

in an envelope or package or container marked "ORIGINAL", all documents comprising the Tender, as describedinITT11; and

in an envelope or package or container marked "COPIES" all required copies of the Tender; and

if alternative Tenders are permitted in accordance with ITT 13, and if relevant:

in an envelope or package or container marked "ORIGINAL - ALTERNATIVE TENDER", the alternative Tender; and

in the envelope or package or container marked "COPIES-ALTERNATIVETENDER", all required copies of the alternative Tender.

The inner envelopes or packages or containers shall:
Bear the name and address of the Procuring Entity.
Bear the name and address of the Tenderer; and
Bear the name and Reference number of the Tender.

If an envelope or package or container is not sealed and marked as required, the *Procuring Entity* will assume no responsibility for the misplacement or premature opening of the Tender. Tenders that were misplaced or opened prematurely will not be accepted.

Deadline for Submission of Tenders

Tenders must be received by the Procuring Entity at the address specified in the **TDS** and no later than the date and time also specified in the **TDS.** When so specified in the **TDS**, Tenderers shall have the option of submitting their Tenders electronically. Tenderers submitting Tenders electronically shall follow the electronic Tender submission procedures specified in the **TDS**.

The Procuring Entity may, at its discretion, extend the deadline for the submission of Tenders by amending the Tender Documents in accordance with ITT 8, in which case all rights and obligations of the Procuring Entity and Tenderers previously subject to the deadline shall thereafter be subject to the deadline as extended.

Late Tenders

The Procuring Entity shall not consider any Tender that arrives after the deadline for submission of tenders, in accordance with ITT 22. Any Tender received by the Procuring Entity after the deadline for submission of Tenders shall be declared late, rejected, and returned unopened to the Tenderer.

Withdrawal, Substitution, and Modification of Tenders

A Tenderer may withdraw, substitute, or modify its Tender after it has been submitted by sending a written notice, duly signed by an authorized representative, and shall include a copy of the authorization in accordance with ITT 20.3, (except that withdrawal notices do not require copies). The corresponding substitution or modification of theTender must accompany the respective written notice. All notices must be:

prepared and submitted in accordance with ITT 20 and ITT 21 (except that withdrawals notices do not require copies), and in addition, the respective envelopes shall be clearly marked "WITHDRAWAL," "SUBSTITUTION," "MODIFICATION;"and

received by the Procuring Entity prior to the deadline prescribed for submission of Tenders, in accordance with ITT 22.

Tenders requested to be withdrawn in accordance with ITT 24.1 shall be returned unopened to theTenderers.

No Tender may be withdrawn, substituted, or modified in the interval between the deadline for submission of Tenders and the expiration of the period of Tender validity specified by the Tenderer on the Form of Tender or any extension thereof.

Tender Opening

Except in the cases specified in ITT 23 and ITT 24.2, the Procuring Entity shall publicly open and read out all Tenders received by the deadline, at the date, time and place specified **in the TDS**, in the presence of Tenderers' designated representatives and anyone who chooses to attend. Any specific electronic Tender opening procedures required if electronic Tendering is permitted in accordance with ITT 22.1, shall be as specified in the **TDS.**

First, envelopes marked "WITHDRAWAL" shall be opened and read out and the envelopes with the corresponding Tender shall not be opened but returned to the Tenderer. No Tender withdrawal shall be permitted unless the corresponding withdrawal notice contains a valid authorization to request the withdrawal and is read out attender opening.

Next, envelopes marked "SUBSTITUTION" shall be opened and read out and exchanged with the corresponding Tender being substituted, and the substituted Tender shall not be opened, but returned to the Tenderer. No Tender substitution shall be permitted unless the corresponding substitution notice contains a valid authorization to request the substitution and is read out at Tender opening.

Next, envelopes marked “MODIFICATION” shall be opened and read out with the corresponding Tender.No Tender modification shall be permitted unless the corresponding modification notice contains a valid authorization to request the modification and is read out at Tender opening.

Next, all remaining envelopes shall be opened on eata time, reading out: the name of the Tenderer and whether there is a modification; the total Tender Price, per lot (contract) if applicable, including any discounts and alternative Tenders; the presence or absence of a Tender Security or Tender-Securing Declaration, if required; and any other details as the Procuring Entity may consider appropriate.

Only Tenders, alternative Tenders and discounts that are opened and read out at Tender opening shall be considered further for evaluation. The Form of Tender and pages of the Bill of Quantities (to be decided on by the tender opening committee) are to be initialed by the members of the tender opening committee attending the opening.

At the Tender Opening, the Procuring Entity shall neither discuss the merits of any Tender nor reject any Tender (except for late Tenders, in accordance with ITT 23.1).

The Procuring Entity shall prepare minutes of the Tender Opening that shall include, as a minimum:

The name of the Tenderer and whether there is a withdrawal, substitution, or modification;

The Tender Price, per lot (contract) if applicable, including any discounts;

Any alternative Tenders;

The presence or absence of a Tender Security, if one was required.

Number of pages of each tender document submitted.

The Tenderers' representatives who are present shall be requested to sign the minutes. The omission of a Tenderer's signature on the minutes shall not invalidate the contents and effect of the minutes. A copy of tender opening register shall be issued to a tenderer upon request.

E. Evaluation and Comparison of Tenders

Confidentiality

Information relating to the evaluation of Tenders and recommendation of contract award shall not be disclosed to Tenderers or any other persons not officially concerned with the Tender process until information on Intention to Award the Contract is transmitted to all Tenderers in accordance with ITT 43.

Any effort by a Tenderer to influence the Procuring Entity in the evaluation of the Tenders or Contract award decisions may result in the rejection of its tender.

Notwithstanding ITT 26.2, from the time of tender opening to the time of contract award, if a tenderer wishes to contact the Procuring Entity on any matter related to the tendering process, it shall do so in writing.

Clarification of Tenders

To assist in the examination, evaluation, and comparison of the tenders, and qualification of the tenderers, the Procuring Entity may, at its discretion, ask any tenderer for a clarification of its tender, given a reasonable time for a response. Any clarification submitted by a tenderer that is not in response to a request by the Procuring Entity shall not be considered. The Procuring Entity's request for clarification and the response shall be in writing. No change, including any voluntary increase or decrease, in the prices or substance of the tender shall be sought, offered, or permitted, except to confirm the correction of arithmetic errors discovered by the Procuring Entity in the evaluation of the tenders, in accordance with ITT 31.

If a tenderer does not provide clarifications of its tender by the date and time set in the Procuring Entity's request for clarification, its Tender may be rejected.

Deviations, Reservations, and Omissions

During the evaluation of tenders, the following definitions apply:

“Deviation” is a departure from the requirements specified in the tender document;

“Reservation” is the setting of limiting conditions or withholding from complete acceptance of the requirements specified in the tender document; and

“Omission” is the failure to submit part or all of the information or documentation required in the Tender document.

Determination of Responsiveness

The Procuring Entity's determination of a Tender's responsiveness is to be based on the contents of thetender itself, as defined in ITT 11.

A substantially responsive Tender is one that meets the requirements of the Tender document without material deviation, reservation, or omission. A material deviation, reservation, or omission is one that, if accepted, would:

Affect in any substantial way the scope, quality, or performance of the Works specified in the Contract; or

limit in any substantial way, inconsistent with the tender document, the Procuring Entity's rights or the tenderer's obligations under the proposed contract; or

if rectified, would unfairly affect the competitive position of other tenderers presenting substantially responsive tenders.

The Procuring Entity shall examine the technical aspects of the tender submitted in accordance with ITT 16, to confirm that all requirements of Section VII, Works' Requirements have been met without any material deviation, reservation or omission.

If a tender is not substantially responsive to the requirements of the tender document, it shall be rejected by the Procuring Entity and may not subsequently be made responsive by correction of the material deviation, reservation, or omission.

Non-material Non-conformities

Provided that a tender is substantially responsive, the Procuring Entity may waive any non-conformities in the tender.

Provided that a Tender is substantially responsive, the Procuring Entity may request that the tenderer submit the necessary information or documentation, within a reasonable period of time, to rectify nonmaterial non- conformities in the tender related to documentation requirements. Requesting information or documentationon such non-conformities shall not be related to any aspect of the price of the tender. Failure of the tenderer to comply with the request may result in the rejection of its tender.

Provided that a tender is substantially responsive, the Procuring Entity shall rectify quantifiable nonmaterial non-conformities related to the Tender Price. To this effect, the Tender Price shall be adjusted, for comparison purposes only, to reflect the price of a missing or non-conforming item or component in the manner specified **in the TDS.**

Arithmetical Errors

The tender sum as submitted and read out during the tender opening shall be absolute and final and shall not be the subject of correction, adjustment or amendment in anyway by any person or entity.

Provided that the Tender is substantially responsive, the Procuring Entity shall handle errors on the following basis:

Any error detected if considered a major deviation that affects the substance of the tender, shall lead to disqualification of the tender as non-responsive.

Any errors in the submitted tender arising from a miscalculation of unit price, quantity, sub total and total bid price shall be considered as a major deviation that affects the substance of the tender and shall lead to disqualification of the tender as non-responsive. and

If there is a discrepancy between words and figures, the amount in words shall prevail

Tenderers shall be notified of any error detected in their bid during the notification of award.

Conversion to Single Currency

For evaluation and comparison purposes, the currency (ies) of the Tender shall be converted into a single currency **as specified in the TDS**.

Margin of Preference and Reservations

A margin of preference may be allowed only when the contract is open to international competitive tendering where foreign contractors are expected to participate in the tendering process and where the contract exceeds the value/threshold specified in the Regulations.

A margin of preference shall not be allowed.

Contracts procured on basis of international competitive tendering shall not be subject to reservations exclusive to specific groups as provided in ITT 33.4.

Where it is intended to reserve a contract to a specific group of businesses (these groups are Small and Medium Enterprises, WOMEN Enterprises, Youth Enterprises and Enterprises of persons living with disability, as the case may be), and who are appropriately registered as such by the authority to be specified in the **TDS**, a procuring entity shall ensure that the invitation to tender specifically indicates that only businesses or firms belonging to the specified group are eligible to tender. No tender shall be reserved to more than one group. If not so stated in the Invitation to Tender and in the Tender documents, the invitation to tender will be open to all interested tenderers.

Nominated Subcontractors

Unless otherwise stated **in the TDS,** the Procuring Entity does not intend to execute any specific elements of the Works by subcontractors selected/nominated by the Procuring Entity. Incase the Procuring Entity nominates a subcontractor, the subcontract agreement shall be signed by the Subcontractor and the Procuring Entity. The main contract shall specify the working arrangements between the main contractor and the nominated subcontractor.

Tenderers may propose subcontracting upto the percentage of total value of contracts or the volume of works as specified **in the TDS**. Subcontractors proposed by the Tenderer shall be fully qualified for their parts of the Works.

Domestic subcontractor's qualifications shall not be used by the Tenderer to qualify for the Works unless their specialized parts of the Works were previously designated so by the Procuring Entity **in the TDS** as can be met by subcontractors referred to hereafter as 'Specialized Subcontractors', in which case, the qualifications of the Specialized Subcontractors proposed by the Tenderer may be added to the qualifications of the Tenderer.

Evaluation of Tenders

The Procuring Entity shall use the criteria and methodologies listed in this ITT and Section III, Evaluation and Qualification Criteria. No other evaluation criteria or methodologies shall be permitted. By applying the criteria and methodologies the Procuring Entity shall determine the Lowest Evaluated Tender in accordance with ITT 40.

To evaluate a Tender, the Procuring Entity shall consider thefollowing:

Price adjustment in accordance with ITT 31.1(iii); excluding provisional sums and contingencies, if any, but including Day work items, where priced competitively;

Price adjustment due to discounts offered in accordance with ITT 14.4;

converting the amount resulting from applying (a) and (b) above, if relevant, to a single currency in accordance with ITT 32;

price adjustment due to quantifiable non material non-conformities in accordance with ITT 30.3; and

any additional evaluation factors specified **in the TDS** and Section III, Evaluation and Qualification Criteria.

The estimated effect of the price adjustment provisions of the Conditions of Contract, applied over the period of execution of the Contract, shall not be considered intender evaluation.

Where the tender involves multiple lots or contracts, the tenderer will be allowed to tender for one or more lots (contracts). Each lot or contract will be evaluated in accordance with ITT 35.2. The methodology to determine the lowest evaluated tenderer or tenderers based one lot (contract) or based on a combination of lots (contracts), will be specified in Section III, Evaluation and Qualification Criteria. In the case of multiple lots or contracts, tenderer will be will be required to prepare the Eligibility and Qualification Criteria Form for each Lot.

Comparison of Tenders

The Procuring Entity shall compare the evaluated costs of all substantially responsive Tenders established in accordance with ITT 35.2 to determine the Tender that has the lowest evaluated cost.

Abnormally Low Tenders and Abnormally High Tenders

Abnormally Low Tenders

An Abnormally Low Tender is one where the Tender price, in combination with other elements of theTender, appears so low that it raises material concerns as to the capability of the Tenderer in regards to the Tenderer's ability to perform the Contract for the offered Tender Price or that genuine competition between Tenderers is compromised.

In the event of identification of a potentially Abnormally Low Tender, the Procuring Entity shall seek written clarifications from the Tenderer, including detailed price analyses of its Tender price in relation to the subject matter of the contract, scope, proposed methodology, schedule, allocation of risks and responsibilities and any other requirements of theTender document.

After evaluation of the price analyses, in the event that the Procuring Entity determines that the Tenderer has failed to demonstrate its capability to perform the Contract for the offered Tender Price, the Procuring Entity shall reject the Tender.

Abnormally High Tenders

An abnormally high tender price is one where the tender price, in combination with other constituent elements of the Tender, appears unreasonably too high to the extent that the Procuring Entity is concerned that it (the Procuring Entity) may not be getting value for money or it may be paying too high a price for the contract compared with market prices or that genuine competition between Tenderers is compromised.

Incase of an abnormally high price, the Procuring Entity shall make a survey of the market prices, check if the estimated cost of the contract is correct and review the Tender Documents to check if the specifications, scope of work and conditions of contract are contributory to the abnormally high tenders. The Procuring Entity may also seek written clarification from the tenderer on the reason for the high tender price. The Procuring Entity shall proceed as follows:

If the tender price is abnormally high based on wrong estimated cost of the contract, the Procuring Entity may accept or not accept the tender depending on the Procuring Entity's budget considerations.

If specifications, scope of work and/or conditions of contract are contributory to the abnormally high tender prices, the Procuring Entity shall reject all tenders and may retender for the contract based on revised estimates, specifications, scope of work and conditions of contract, as the case may be.

If the Procuring Entity determines that the Tender Price is abnormally too high because genuine competition between tenderers is compromised (*often due to collusion, corruption or other manipulations*), the Procuring Entity shall reject all Tenders and shall institute or cause competent Government Agencies to institute an investigation on the cause of the compromise, before retendering.

Unbalanced and/or Front-Loaded Tenders

If in the Procuring Entity's opinion, the Tender that is evaluated as the lowest evaluated price is seriously unbalanced and/or front loaded, the Procuring Entity may require the Tenderer to provide written clarifications. Clarifications may include detailed price analyses to demonstrate the consistency of the tender prices with the scope of works, proposed methodology, schedule and any other requirements of the Tender document.

After the evaluation of the information and detailed price analyses presented by the Tenderer, the Procuring Entity may as appropriate:

accept the Tender; or

require that the total amount of the Performance Security be increased at the expense of the Tenderer to a level not exceeding a 10% of the Contract Price; or

agree on a payment mode that eliminates the inherent risk of the Procuring Entity paying too much for undelivered works; or

reject the Tender,

Qualifications of the Tenderer

The Procuring Entity shall determine to its satisfaction whether the eligible Tenderer that is selected as having submitted the lowest evaluated cost and substantially responsive Tender, meets the qualifying criteria specified in Section III, Evaluation and Qualification Criteria.

The determination shall be based upon an examination of the documentary evidence of the Tenderer's qualifications submitted by the Tenderer, pursuant to ITT 17. The determination shall not take into consideration the qualifications of other firms such as the Tenderer's subsidiaries, parent entities, affiliates, subcontractors (other than Specialized Subcontractors if permitted in theTender document), or any other firm(s) different from theTenderer.

An affirmative determination shall be a prerequisite for award of the Contract to the Tenderer. A negative determination shall result in disqualification of the Tender, in which event the Procuring Entity shall proceed to the Tenderer who offers a substantially responsive Tender with the next lowest evaluated price to make a similar determination of that Tenderer's qualifications to perform satisfactorily.

Lowest Evaluated Tender

Having compared the evaluated prices of Tenders, the Procuring Entity shall determine the Lowest Evaluated Tender. The Lowest Evaluated Tender is the Tender of the Tenderer that meets the Qualification Criteria and whose Tender has been determined to be:

Most responsive to theTender document; and

The lowest evaluated price.

Procuring Entity's Right to Accept Any Tender, and to Reject Any or All Tenders.

The Procuring Entity reserves the right to accept or reject any Tender and to annul the Tender process and reject all Tenders at any time prior to Contract Award, without there by incurring any liability to Tenderers. Incase of annulment, all Tenders submitted and specifically, Tender securities, shall be promptly returned to the Tenderers.

F. AWARD OF CONTRACT

Award Criteria

The Procuring Entity shall award the Contract to the successful tenderer whose tender has been determined to be the Lowest Evaluated Tender.

Notice of Intention to enter into a Contract

Upon award of the contract and Prior to the expiry of the Tender Validity Period the Procuring Entity shall issue a Notification of Intention to Enter into a Contract/Notification of award to all tenderers which shall contain, at a minimum, the following information:

the name and address of the Tenderer submitting the successful tender;

the Contract price of the successful tender;

a statement of the reason(s) the tender of the unsuccessful tenderer to whom the letter is addressed was unsuccessful, unless the price information in (c) above already reveals the reason;

the expiry date of the Standstill Period; and

instructions on how to request a debriefing and/or submit a complaint during the stand still period;

Stand still Period

The Contract shall not be signed earlier than the expiry of a Standstill Period of 14 days to allow any dissatisfied tender to launch a complaint. Where only one Tender is submitted, the Standstill Period shall not apply.

Where a Standstill Period applies, it shall commence when the Procuring Entity has transmitted to eachTenderer the Notification of Intention to Enter into a Contract with the successful Tenderer.

Debriefing by the Procuring Entity

On receipt of the Procuring Entity's Notification of Intention to Enter into a Contract referred to in ITT 43, an unsuccessful tenderer may make a concerns regarding their tender. The Procuring Entity shall provide the debriefing within five days of receipt of the request.

Debriefings of unsuccessful Tenderers may be done in writing or verbally. The Tenderer shall bear its own costs of attending such a debriefing meeting.

Letter of Award

Prior to the expiry of the Tender Validity Period and upon expiry of the Standstill Period specifiedin ITT 42.1, upon addressing a complaint that has been filed within the Standstill Period, the Procuring Entity shall transmit the Letter of Award to the successful Tenderer. The letter of award shall request the successful tenderer to furnish the Performance Security within 21 days of the date of the letter.

Signing of Contract

Upon the expiry of the fourteen days of the Notification of Intention to enter into contract and upon the parties meeting their respective statutory requirements, the Procuring Entity shall send the successful Tenderer the Contract Agreement.

Within fourteen (14) days of receipt of the Contract Agreement, the successful Tenderer shall sign, date, and return it to the Procuring Entity.

The written contract shall be entered into within the period specified in the notification of award and before expiry of the tender validity period.

Performance Security

Within twenty-one (21) days of the receipt of the Letter of Award from the Procuring Entity, the successful Tenderer shall furnish the Performance Security and, any other documents required in the **TDS**, in accordance with the General Conditions of Contract, subject to ITT 38.2 (b), using the Performance Security and other Forms included in Section X, Contract Forms, or another form acceptable to the Procuring Entity. A foreign institution providing a bank guarantee shall have a correspondent financial institution located in Kenya, unless the Procuring Entity has agreed in writing that a correspondent bank is not required.

Failure of the successful Tenderer to submit the above-mentioned Performance Security and other documents required in the**TDS** or sign the Contract shall constitute sufficient grounds for the annulment of the award and forfeiture of the Tender Security. In that event the Procuring Entity may award the Contract to the Tenderer offering the next Best Evaluated Tender.

Performance security shall not be required for contract sestimated to cost less than the amount specified in the Regulations.

Publication of Procurement Contract

Within fourteen days after signing the contract, the Procuring Entity shall publish the awarded contract at its notice boards and websites; and on the Website of the Authority. At the minimum, the notice shall containthe following information:

name and address of the Procuring Entity;

name and reference number of the contract being awarded, a summary of its scope and the selection method used;
the name of the successful Tenderer, the final total contract price, the contract duration.
dates of signature, commencement and completion of contract;
names of all Tenderers that submitted Tenders, and their Tender prices as read out at Tender opening.

Procurement Related Complaint and Administrative Review

The procedures for making Procurement-related Complaints shall be specified in the **TDS.**

A request for administrative review shall be made in the form provided under contract forms.

Section II - Tender Data Sheet (TDS)

The following specific data shall complement, supplement, or amend the provisions in the Instructions to Tenderers (ITT). Whenever there is a conflict, the provisions herein shall prevail over those in ITT.

Reference to ITC Clause	PARTICULARS OF APPENDIX TO INSTRUCTIONS TO TENDERER'S
A. General	
ITT 1.1	The name of the contract is **CONSTRUCTION OF GITARAKA 2 TWIN-CELL BOX CULVERT- MWEA WARD - MWEA WARD** The reference number of the Contract is **NEGOTIATION: 2699726-2026-2027**
B. Contents of Tender Document	
ITT 7.1	(i) The prospective bidder requiring any clarification of the bidding documents may notify the Employer in writing, cable or by e-mail (hereinafter the term cable is deemed to include telex and facsimile) at the Employer's mailing address indicated in the Bidding Data or visit our procurement office at Embu County Headquarters. not later than 7 days before submission of bids (Ii) The Procuring Entity will publish its response to any request for clarification that is received earlier than 7 days before the deadline for the submission of bids. Copies of the Employer's response to queries raised by bidders (including an explanation of the query but without identifying the sources of the inquiry) will be sent to all prospective bidders who have purchased the bidding documents.
ITT 7.2	(A) A pre-arranged pretender site visit *"shall not"* take place at the following date, time and place: Date: _____N/A_____ Time: _____N/A_____ Place: _____N/A_____
ITT 7.3	The Tenderer will submit any questions in writing to reach the Procuring Entity not later than _____N/A_____ before the meeting.
ITT 7.5	The Procuring Entity's website, where Minutes of the pre-Tender meeting and the pre-arranged pretender will be published, is _____N/A_____
C. Preparation of Tenders	
ITT 11.1 (h)	The Tenderer shall submit the following additional documents in its Tender: *[list any additional document not already listed in ITT 11.1 that must be submitted with the Tender. The list of additional documents should include the following:]* ***N/A***
ITT 13.1	Alternative Tenders *"**shall not be**"* considered.
ITT 13.2	Alternative times for completion *"**shall not be**"* permitted.

Reference to ITC Clause	PARTICULARS OF APPENDIX TO INSTRUCTIONS TO TENDERER'S
ITT 13.4	Alternative technical solutions shall NOT be permitted for any part of the Works: ___
ITT 14.5	The prices quoted by the Tenderer shall be f**ixed**
ITT 15.2(a)	Foreign currency requirements **not allowed.**
ITT 18.2	The Tender validity period shall be **120 DAYS,** *counting from the deadline of the Tender submission* date.
ITT 18.3	a) The Number of days beyond the expiry of the initial tender validity period will be __30_days. (b) The Tender price shall not be adjusted .
ITT 19.1	*[If a Tender Security shall be required, a Tender-Securing Declaration shall not be required, and vice versa.]* A Tender Security Tender Security of **ksh. 150,000.00** in either of the following forms**: .A Bank Guarantee or guarantee by insurance company registered and licenced by the Insurance Regulatory Authority of Kenya (IRA),guarantee by financial institution aproved and licenced by Central Bank of Kenya** A Tender-Securing Declaration "*shall be*" required.
ITT 19.5	In any case, the tenderer is certifying/making any declaration of any information, should do that in the presence of an active status commissioner of oaths or an advocate registered in Kenya
ITT 20.1	In addition to the original of the Tender, the number of copies is: N/A *[insert number of copies]*
ITT 20.3	The written confirmation of authorization to sign on behalf of the Tenderer shall consist of: The form of power of attorney that shall be duly filled, signed, and stamped to demonstrate the authority of the signatory to sign the Tender. Additionally, every page of the bid document should be numerically serialised, initialled, and stamped by the tenderer
D. Submission and Opening of Tenders	
ITT 21.2	A tender package or container that cannot fit in the tender box shall be received and registered at the Director of the Procurement Office
ITT 22.1	(A) For Tender submission purposes only, the Procuring Entity's address is: (1) Embu County Government P.O.Box 36 Embu Or Hand Delivered To Tender Box At Embu County Government Procurement Office In case of any certification required in this tender shall be done by the commissioner of oaths or an advocate registered in Kenya.

Reference to ITC Clause	PARTICULARS OF APPENDIX TO INSTRUCTIONS TO TENDERER'S
ITT 25.1	The Tender opening shall take place at the time and the address for Opening of Tenders provided below: Tenders will be opened immediately after the deadline date and time specified above or any deadline date and time specified later. Tenders will be publicly opened in the presence of the Tenderers' designated representatives who choose to attend at a location as will be designated.
ITT 25.1	If Tenderers are allowed to submit Tenders electronically, they shall follow the electronic tender submission procedures **specified below** E-procurement suppliers' portal: **www.supplier.treasury.go.ke**
E. Evaluation, and Comparison of Tenders	
ITT 30.3	The adjustment shall be based on the _____*N/A*____ *[insert "average" or "highest"]* price of the item or component as quoted in other substantially responsive Tenders. If the price of the item or component cannot be derived from the price of other substantially responsive Tenders, the Procuring Entity shall use its Lowest estimate.
ITT 31.2	The error shall be considered a major deviation that leads to disqualification of the tender if the percentage of the error (error over the tender price quoted) is: **more than____5_____% or less than _____5_____ %.**
ITT 32.1	The currency that shall be used for the Tender evaluation will be Kenyan shillings
ITT 33.2	A margin of preference *"**shall not**"* apply.
ITT 33.4	The invitation to tender is extended to the following groups that qualify for Reservations _____N/A_____
ITT 34.1	At this time, the Procuring Entity *does not intend* to execute any parts of the Works by subcontractors.
ITT 34.2	Contractor shall not be allowed to subcontract any parts of the Works in this tender.
ITT 34.3	***N/A*** The parts of the Works for which the Procuring Entity permits Tenderers to propose Specialized Subcontractors are designated as follows: For the above-designated parts of the Works that may require Specialized Subcontractors, the relevant qualifications of the proposed Specialized Subcontractors will be added to the qualifications of the Tenderer for the purpose of evaluation.
ITT 35.2 (e)	Additional requirements apply. These are detailed in the evaluation criteria in Section III, Evaluation and Qualification Criteria. N/A
ITT 48.2	Additional requirements are: _____N/A_____
ITT 50.1	The procedures for making a Procurement-related Complaint are available from the PPRA website, info@ppra.go.ke or complaints@ppra.go.ke. If a Tenderer wishes to make a Procurement-related Complaint, the Tenderer should submit its complaint following these procedures, in writing (by the quickest means available, that is either by hand delivery or email to: Title/position: *[Director Supply Chain]* Procuring Entity: *[Embu County]*

Reference to ITC Clause	PARTICULARS OF APPENDIX TO INSTRUCTIONS TO TENDERER'S
	Email address*: [procurement@embu.go.ke]* In summary, a Procurement-related Complaint may challenge any of the following: (i) the terms of the Tender Documents; and (ii) the Procuring Entity's decision to award the contract.

SECTION III- EVALUATION AND QUALIFICATION CRITERIA

Preliminary examination for Determination of Responsiveness
The Procuring Entity will start by examining all tenders to ensure they meet in all respects the eligibility criteria and other requirements in the ITT, and that the tender is complete in all aspects in meeting the requirements of *"Part 2 – Procuring Entity's Works Requirements",* including checking for tenders with unacceptable errors, abnormally low tenders, abnormally high tenders and tenders that are front loaded. The Standard Tender Evaluation Report for Goods and Works for evaluating Tenders provides clear guidelines on how to deal with the review of these requirements. Tenders that do not pass the Preliminary Examination will be considered irresponsive and will not be considered further.

1. All entries must be typed or written in ink. Mistakes must not be erased but should be crossed out and corrections made and initiated by the persons signing the tender.
2. The form of bid **shall** be prepared as per section 7, signed and stamped by an individual entrusted with the powers of attorney.
    a. *The Tenderer must prepare the Form of Tender on stationery with its letterhead clearly showing the Tenderer's complete name and business address.*
    b. *All italicized text is to help the Tenderer in preparing this form.*
    c. *Tenderer must complete and sign the CERTIFICATE OF INDEPENDENT TENDER DETERMINATION and the SELF DECLARATION OF THE TENDERER attached to this Form of Tender.*
    d. *The Form of Tender shall include the following Forms duly completed and signed by the Tenderer.*
        i. *Tenderer's Eligibility-Confidential Business Questionnaire.*
        ii. *Certificate of Independent Tender Determination.*
        iii. *Self-Declaration of the Tenderer-Form SD1.*
3. Fill Tender-Securing Declaration form, which shall use the form included in Section IV, Tender Forms.
4. Provide Tender Security of **ksh. 150,000.00** in either of the following forms**: .A Bank Guarantee or guarantee by insurance company registered and licenced by the Insurance Regulatory Authority of Kenya (IRA),guarantee by financial institution aproved and licenced by Central Bank of Kenya**
5. Each bidder should submit an original completed tender document in a plain sealed envelope with the Tender Number and Project Name endorsed on the outside and through the E-procurement suppliers' portal: **www.supplier.treasury.go.ke** (same as the one submitted in hardcopy)
6. The bidder shall duly fill, sign, and stamp the confidential business questionnaire by an individual entrusted with the powers of attorney.
7. **The tender document shall be submitted complete, intact, with no page alterations.**

Tenderers shall ensure that the submitted bid (documents) is /are **numerically serialised, initialled, and stamped by the tenderer**. i.e. (each page in the submitted bid document).

Please note that all pages of the tender documents submitted by bidders shall be sequentially numbered, that is: 1, 2, 3, 4, 5, etc. The serialization shall be undertaken by the bidder by doing fresh numbering on its documents. The pagination of the tender documents as downloaded from the Embu County Government website should not be used

as a means of Serialization. The bidder's serialization should follow the same logical sequence from the first page to the end.

8. Tenderer shall fill the below forms/schedules in the bid document

    - Form Equipment
    - Form Mper-1
    - Form per-2
    - Tenders qualification without prequalification
    - Sources of finance
    - Financial documents
    - Form fin 3.4
    - Form Exp – 4.1
    - Certificate of Independent Tender Determination
    - Form SD1
    - Form SD2
    - Declaration & Commitment to the code of ethics

9. Provide a work methodology and a superimposed work program on A3 paper.

Bidders shall attach copies of the under-listed documents endorsed by an active commissioner of oaths/advocate registered in Kenya. All submitted documents must be clear and legible; any bidder who fails to adhere to the requirement will be automatically disqualified.

1. Provide a copy of sworn affidavit, refer to the certificate of independent tender determination.
2. Copy of a valid current-year tax compliance certificate or tax exemption certificate.
3. Copy of a Certificate of Incorporation.
4. Copy of the Current CR12 certificate (dated within 6 months before the date of opening) from the registrar of companies. This should be provided with the identification documents of directors, shareholders, and all individuals listed on the CR12 (ID or Passport)**.**
5. Copy of NCA registration certificate for roadworks category 7 and above.
6. Copy of valid current NCA practicing licenses for road works.
7. The bidder shall submit a copy of power of attorney signed and stamped.
8. A copy of a valid current year business permit
9. Financial audited accounts for the immediate previous three years endorsed, stamped, signed and dated by an active status registered external auditor.

Note: The County Government of Embu shall verify all the information submitted. Any form of forgery or misinformation from the bidder shall lead to cancellation of the bid/ award, institution of legal proceedings and blacklisting for all future Embu County Government contracts.

Bidders who will not comply with the above criteria shall be considered non-responsive and will not be subjected to technical evaluation.

SECTION II: TECHNICAL EVALUATION

	2. TECHNICAL EVALUATION	Score	Max Score	Awarded score
	A) financial performances			
	(a) Provide a letter of credit (original copy) from the bank. The letter should be authentic, with an email address of the contact person for verification.			

	2. TECHNICAL EVALUATION	Score	Max Score	Awarded score
	Award 5 marks Tender-specific and authenticated letter of credit from the bank within the immediate 12months)	**5**		
	Award 15 marks Certified bank statements from the same bank offering a letter of credit within the immediate 12months)	15		
	TOTAL (Financial performance)		**20**	
	B) Construction experience			
	Specific Construction Experience (STRICTLY ROADS CONSTRUCTION)			
	Experience of the Contractor as a Roads Contractor in the last 5 years for a similar nature executed within Kenya and that have been satisfactorily and substantially completed as a prime contractor. (**Award 10 marks** for 3 Completion Certificates / Client takeover Certs attached.) (**Award 5 marks** for 2 Completion Certificates / Client takeover Certs attached.) (**Award 3 marks** for 1 Completion Certificates / Client takeover Certs attached.) Otherwise, award zero if no document is attached.	**10.00**		
			10	
	C) Tools & Equipment holding			
	Tools & Equipment Holding Requirements			
	Bidder to attach either a copy of the lease agreement/logbook for vehicular machines/copy of purchase receipts for minor equipment for the works.			
	(Equipment holding Requirements)			
	a) Concrete Mixer – award **5 marks** for owned/ leased	5		
	b) Dewatering Pumps - award **5 marks** for owned/leased	5		
	c) Vibratory Roller - award **4 marks** for owned/leased	4		
	d) Tipper - award **4 marks** for owned/leased	4		
	e) Poker Vibrator - **award 4** marks for owned/leased	4		
	f) Excavator/Backhoe- award **4 marks** for owned/leased	4		
	g) Water boozer - award **4 marks** for owned/leased	4		
	h) Survey Equipment(Dumpy level or total station) - award **5 marks** for owned/leased	5		

	2. TECHNICAL EVALUATION	Score	Max Score	Awarded score
	Note: All lease agreements from private firms and from the Ministry of Roads and Transport shall be of the current financial year, stamped, signed, dated, and include a payment receipt. For privately leased, there shall be a consent to lease agreement and logbooks of the owner			
	In the absence of any of these documents – 0 marks			
	Total for Equipment Holding Requirements		**35**	
	c) Key Personnel			
	Evaluate if key technical personnel have the academic qualifications, are certified, and authorized by the personnel.			
	Site agent-minimum qualification, diploma in civil/highway engineering, and shall provide IET (Institute of Engineering Technicians & Technologists) /KETRB (Kenya Engineering Technology Registration Board) certificate of good standing.			
	OR Degree certificate in Civil Engineering, and provide registration with EBK / IEK with a certificate of good standing			
	a. 3 years and above of specific road works experience with a professional certificate and registration from relevant bodies (13 marks).	13		
	b. 3 years and above of specific road works experience with a professional certificate only (10 marks).	10		
	c. with 1-2 years of specific road works construction experience with a professional certificate and registration from relevant bodies (11marks).	11		
	d. with 1-2 years of specific road works construction experience with a professional certificate only (8marks).	8		
	e. Otherwise, less than 1 year of specific road works experience with a professional certificate and registration from relevant bodies. award (8 Marks)	8		
	f. Otherwise, for less than 1 year of specific road works experience with a professional certificate only. award (6 Marks)	6		
	Foreman -minimum qualification, Certificate in civil engineering or any other construction-related course:			
	a. 3 years and above of specific roadworks experience (11 marks)	11		
	b. with 1-2 years of specific roadworks experience (9 marks)	9		
	Otherwise, award 2 marks for less than 6 years of specific road construction experience.	2		

	2. TECHNICAL EVALUATION	Score	Max Score	Awarded score
	Surveyor -minimum qualification, diploma in survey or any other survey-related course:			
	a. 3 years and above of specific roadworks and civil works construction experience (11 marks)	11		
	b. with 1-2 years of specific roadworks and civil works construction experience (9 marks)	9		
	Otherwise, award 7 marks for less than 1 year of specific road construction experience.	7		
	Total key personnel		**35**	
	GRAND TOTAL (Totals for A, B & C) **- SET PASSMARK AT 70%**	**100**		

Bidders who shall not get 70% marks and above in the TECHNICAL evaluation will be considered non-responsive and will not be subjected to financial evaluation.

3. FINANCIAL EVALUATION

The financial evaluation will include:

(1) Arithmetic Errors (Clause 29)

The bid shall be checked for arithmetic errors based on the rates and the total sums indicated in the bills of quantities. Confirmation shall be sought in writing from the Tenderers whose Tender sums will be determined to have a significant arithmetic error to their disadvantage, to confirm whether they stand by their Tender sums.) If the arithmetical check computation will exceed the form bid amount (materially deviation), then the bidder shall be considered as non-responsive.

(2) Comparison of rates (clause 30)

The evaluation committee will compare rates from different bidders and note consistency of rates and front-loading. The evaluation committee will judge and make an appropriate decision, giving evidence.

STAGE 3 –RECOMMENDATION FOR AWARD

AWARD CRITERIA:

Bidders who attain **70 %** Points and above in the technical evaluation stage will be subjected to Pricing and Arithmetical Analysis to determine compliance with the tender requirements. Compliant tenders will be ranked according to the tender amounts quoted. Having compared the evaluated prices of Tenders, the Procuring Entity shall determine the Lowest Evaluated Tender. The tender ranked first will be the one with the Lowest Evaluated Tender Price. The Lowest Evaluated bid document is of the Tenderer that meets the Qualification Criteria and whose Tenderer has been determined to be: a) Most responsive to the Tender document; and b) the lowest evaluated price. The Tenderer will be notified of the Award**.**

Note: The lowest bidder shall be within the allocated amount for the project

STAGE 4- POST QUALIFICATION AND CONTRACT AWARD (ITT 39), MORE SPECIFICALLY,

a) In case the tender was subject to post-qualification, the contract shall be awarded to the lowest evaluated tenderer, subject to confirmation of pre-qualification data, if so required.

b) In case the tender was not subject to post-qualification, the tender that has been determined to be the lowest evaluated tenderer shall be considered for contract award, subject to meeting each of the following conditions.

The Tenderer shall demonstrate that it has access to, or has available, liquid assets, unencumbered real assets, lines of credit, and other financial means (independent of any contractual advance payment) sufficient to meet the construction cash flow of Kenya Shillings **Three Million**.

Minimum average annual construction turnover of Kenya Shillings **Five Million**, equivalent calculated as total certified payments received for contracts in progress and/or completed within the last Three years.

At least three contracts of contract(s) of a similar nature executed within Kenya, or the East African Community, or abroad, that have been satisfactorily and substantially completed as a prime contractor.

Contractor's Representative and Key Personnel, who are specified as listed in the table below.

Contractors key equipment listed on the table "Contractor's Equipment" below.

Other conditions depending on their seriousness.

c)History of non-performing contracts:
Tenderer and each member of JV incase the Tenderer is a JV, shall demonstrate that Non-performance of a contract did not occur because of the default of the Tenderer, or the member of a JV in the **ON AND BEFORE FY 2026/-2027 _____(*Since July 2026 AND BEFORE*).** The required information shall be furnished in the appropriate form.

Pending Litigation
Financial position and prospective long-term profitability of the Single Tenderer, and in the case the Tenderer is a JV, of each member of the JV, shall remain sound according to criteria established with respect to Financial Capability under Paragraph (i) above if all pending litigation will be resolved against the Tenderer.Tenderer shall provide information on pending litigations in the appropriate form.

Litigation History
There shall be no consistent history of court/arbitral award decisions against the Tenderer, in the last _____(*Since July 2018*). All parties to the contract shall furnish the information in the appropriate form about any litigation or arbitration resulting from contracts completed or ongoing under its execution over the years specified. A consistent history of awards against the Tenderer or any member of a JV may result in rejection of the tender.

DUE DILIGENCE

An evaluation committee may, after Tender evaluation, but prior to the award of the Tender, conducts due diligence and present the report in writing to confirm and verify the qualifications of the Tenderer who submitted the lowest evaluated responsive Tender to be awarded the contract in accordance with this Act.

The conduct of due diligence may include obtaining confidential references from persons with whom the Tenderer has had prior engagement.

To acknowledge that the report is a true reflection of the proceedings held, each member who was part of the due diligence by the evaluation committee shall-

initial each page of the report; and
Append his or her signature as well as their full name and designation.

QUALIFICATION FORM SUMMARY

1	**2**	**3**	***4***	***5***
Item No.	**Qualification Subject**	**Qualification Requirement**	***Document To be Completed by Tenderer***	***For Procuring Entity's Use (Qualification met or Not Met)***
1	Nationality	Nationality in accordance with ITT 3.6	Forms ELI – 1.1 and 1.2, with attachments	
2	Tax Obligations for Kenyan Tenderers	Has produced a current tax clearance certificate or tax exemption certificate issued by Kenya Revenue Authority in accordance with ITT 3.14.	Attachment	
3	Conflict of Interest	No conflicts of interest in accordance with ITT 3.3	Form of Tender	
4	PPRA Eligibility	Not having been declared ineligible by the PPRA as described in ITT 3.7	Form of Tender	
5	State- owned Enterprise	Meets conditions of ITT 3.8	Forms ELI – 1.1 and 1.2, with attachments	
6	Goods, equipment and services to be supplied under the contract	To have their origin in any country that is not determined ineligible under ITT 4.1	Forms ELI – 1.1 and 1.2, with attachments	
7	History of Non-Performing Contracts	Non-performance of a contract did not occur as a result of contractor default since 1st July 2019	Form CON-2	
8	Suspension Based on Execution of Tender/Proposal Securing Declaration by the Procuring	Not under suspension based on-execution of a Tender/Proposal Securing Declaration pursuant to ITT 19.9	Form of Tender	

1	2	3	*4*	*5*
Item No.	**Qualification Subject**	**Qualification Requirement**	***Document To be Completed by Tenderer***	***For Procuring Entity's Use (Qualification met or Not Met)***
	Entity			
9	Pending Litigation	Tender's financial position and prospective long-term profitability still sound according to criteria established in 3.1 and assuming that all pending litigation will NOT be resolved against the Tenderer.	Form CON – 2	
10	Litigation History	No consistent history of court/arbitral award decisions against the Tenderer since **1st July 2018.**	Form CON – 2	
11	Financial Capabilities	(i) The Tenderer shall demonstrate that it has access to, or has available, liquid assets, unencumbered real assets, lines of credit, and other financial means (independent of any contractual advance payment) sufficient to meet the construction cash flow requirements estimated as Kenya Shillings *[insert amount]* equivalent for the subject contract(s) net of the Tenderer's other commitments. (ii) The Tenderers shall also demonstrate, to the satisfaction of the Procuring Entity, that it has adequate sources of finance to meet the cash flow requirements on works currently in progress and for future contract commitments. (iii) The audited balance sheets or, if not required by the laws of the Tenderer's country, other financial statements acceptable to the Procuring Entity, for the last *[insert number of years]* years shall be submitted and must demonstrate the current soundness of the Tenderer's financial position and indicate its prospective long-term profitability.	Form FIN – 3.1, with attachments	
12	Average Annual Construction Turnover	Minimum average annual construction turnover of Kenya Shillings *[insert amount]*, equivalent calculated as total certified payments received for contracts in progress and/or completed within the last *[insert of year]* years, divided by *[insert number of years]* years	Form FIN – 3.2	
13	General Construction Experience	Experience under construction contracts in the role of prime contractor, JV member, sub-contractor, or management contractor for at least the last *[insert number of years]* years, starting 1st January *[insert year]*.	**4.** Form EXP – 4.1 **Experience**	
14	Specific Construction & Contract Management Experience	A minimum number of *[state the number]* similar contracts specified below that have been satisfactorily and substantially completed as a prime contractor, joint venture member, management contractor or sub-contractor between 1st January [*insert year*] and tender submission deadline i.e. …. (Number) contracts, each of minimum value Kenya shillings……..	Form EXP 4.2(a)	

1	2	3	*4*	*5*
Item No.	**Qualification Subject**	**Qualification Requirement**	***Document To be Completed by Tenderer***	***For Procuring Entity's Use (Qualification met or Not Met)***
		equivalent. [*In case the Works are to be tender as individual contracts under multiple contract procedure, the minimum number of contracts required for purposes of evaluating qualification shall be selected from the options mentioned in ITT 35.4]* The similarity of the contracts shall be based on the following: [*Based on Section VII, Scope of Works, specify the minimum key requirements in terms of physical size, complexity, construction method, technology and/or other characteristics including part of the requirements that may be met by specialized subcontractors, if permitted in accordance with ITT 34.3]*		

SECTION IV - TENDERING FORMS

QUALIFICATION FORMS

FOREIGN TENDERERS 40%RULE.
TENDERER'S ELIGIBILITY- CONFIDENTIAL BUSINESS QUESTIONNAIRE
Form EQU: EQUIPMENT.
FORM PER -1.
FORM PER-2.
TENDERERS QUALIFICATION WITHOUT PRE-QUALIFICATION.
FORM ELI-1.1.
FORM ELI-1.2.
FORM CON –2.
FORM FIN –3.1.
FORM FIN –3.2.
FORM FIN –3.3.
FORM FIN –3.4.
FORM EXP -4.1.
FORM EXP - 4.2(a).
FORM EXP - 4.2 (a) (cont.).
FORM EXP -4.2 (b).

OTHER FORMS

FORM OFTENDER.
FORM OF TENDER SECURITY - DEMAND BANKGUARANTEE.
FORM OF TENDER SECURITY (TENDERBOND).
FORM OF TENDER-SECURINGDECLARATION.
APPENDIX TO TENDER.

TECHNICAL PROPOSAL FORMS

Site Organization.
Method Statement.
Mobilization Schedule.
Construction Schedule.

QUALIFICATION FORMS

1. FOREIGN TENDERERS 40% RULE

Pursuant to ITT 3.9, a foreign tenderer must complete this form to demonstrate that the tender fulfils this condition.

ITEM	Description of Work Item	Describe location of Source	COST in K. shillings	Comments, if any
A	**Local Labor**			
1				
2				
3				
4				
5				
B	**Sub contracts from Local sources**			
1				
2				
3				
4				
5				
C	**Local materials**			
1				
2				
3				
4				
5				
D	**Use of Local Plant and Equipment**			
1				
2				
3				
4				
5				
E	Add any other items			
1				
2				
3				
4				
5				
6				
	TOTAL COST LOCAL CONTENT		XXXXX	
	PERCENTAGE OF CONTRACT PRICE		xxxx	

FORM EQU: EQUIPMENT

The Tenderer shall provide adequate information to demonstrate clearly that it has the capability to meet the requirements for the key equipment listed in Section III, Evaluation and Qualification Criteria. A separate Form shall be prepared for each item of equipment listed, or for alternative equipment proposed by the Tenderer.

Item of equipment		
Equipment information	Name of manufacturer	Model and power rating
	Capacity	Year of manufacture
Current status	Current location	
	Details of current commitments	
Source	Indicate source of the equipment ☐ Owned ☐ Rented ☐ Leased ☐ Specially manufactured	

Omit the following information for equipment owned by the Tenderer.

Owner	Name of owner	
	Address of owner	
	Telephone	Contact name and title
	Fax	Telex
Agreements	Details of rental / lease / manufacture agreements specific to the project	

FORMPER-1

Contractor's Representative and Key Personnel Schedule

Tenderers should provide the names and details of the suitably qualified Contractor's Representative and Key Personnel to perform the Contract. The data on their experience should be supplied using the Form PER-2 below for each candidate.

Contractor' Representative and Key Personnel.

	Title of position: Contractor's Representative	
	Name of candidate:	
	Duration of appointment:	[*insert the whole period (start and end dates) for which this position will be engaged*]
	Time commitment: for this position:	[*insert the number of days/week/months/ that has been scheduled for this position*]
	Expected time schedule for this position:	[*insert the expected time schedule for this position (e.g. attach high level Gantt chart*]
2.	**Title of position:** *[_____]*	
	Name of candidate:	
	Duration of appointment:	[*insert the whole period (start and end dates) for which this position will be engaged*]
	Time commitment: for this position:	[*insert the number of days/week/months/ that has been scheduled for this position*]
	Expected time schedule for this position:	[*insert the expected time schedule for this position (e.g. attach high level Gantt chart*]
3.	**Title of position:** *[_____]*	
	Name of candidate:	
	Duration of appointment:	[*insert the whole period (start and end dates) for which this position will be engaged*]
	Time commitment: for this position:	[*insert the number of days/week/months/ that has been scheduled for this position*]
	Expected time schedule for this position:	[*insert the expected time schedule for this position (e.g. attach high level Gantt chart*]
4.	**Title of position:** *[_____]*	
	Name of candidate:	
	Duration of appointment:	[*insert the whole period (start and end dates) for which this position will be engaged*]
	Time commitment: for this position:	[*insert the number of days/week/months/ that has been scheduled for this position*]
	Expected time schedule for this position:	[*insert the expected time schedule for this position (e.g. attach high level Gantt chart*]
	Title of position: *[insert title]*	
	Name of candidate	
	Duration of appointment:	[*insert the whole period (start and end dates) for which this position will be engaged*]
	Time commitment: for this position:	[*insert the number of days/week/months/ that has been scheduled for this position*]

	Expected time schedule for this position:	[*insert the expected time schedule for this position (e.g. attach high level Gantt chart*]

FORM PER-2:

Resume and Declaration - Contractor's Representative and Key Personnel

Name of Tenderer

Position [*#1*]: [*title of position from Form PER-1*]		
Personnel information	Name:	Date of birth:
	Address:	E-mail:
	Professional qualifications:	
	Academic qualifications:	
	Language proficiency: *[language and levels of speaking, reading and writing skills]*	
Details		
	Address of Procuring Entity:	
	Telephone:	Contact (manager / personnel officer):
	Fax:	
	Job title:	Years with present Procuring Entity:

Summarize professional experience in reverse chronological order. Indicate particular technical and managerial experience relevant to the project.

Project	**Role**	**Duration of involvement**	**Relevant experience**
[main project details]	***[role and responsibilities on the project]***	***[time in role]***	***[describe the experience relevant to this position]***

DECLARATION

I, the under signed *[insert either "Contractor's Representative" or "Key Personnel" as applicable]*, certify that to the Lowest of my knowledge and belief, the information contained in this Form PER-2 correctly describes myself, my qualifications and my experience.

I confirm that I am available as certified in the following table and throughout the expected time schedule for this position as provided in the Tender:

Commitment	**Details**
Commitment to duration of contract:	*[insert period (start and end dates) for which this Contractor's Representative or Key Personnel is available to work on this contract]*
Time commitment:	*[insert period (start and end dates) for which this Contractor's Representative or Key Personnel is available to work on this contract]*

I understand that any misrepresentation or omission in this Form may:

be taken into consideration during Tenderevaluation;
result in my disqualification from participating in theTender;
result in my dismissal from the contract.

Name of Contractor's Representative or Key Personnel: [*insert name*]

Signature:_____

Date: (day month year): _____

Countersignature of authorized representative of theTenderer:

Signature:_____

Date: (day month year): _____

TENDERERS QUALIFICATION WITHOUT PRE-QUALIFICATION

To establish its qualifications to perform the contract in accordance with Section III, Evaluation and Qualification Criteria the Tenderer shall provide the information requested in the corresponding Information Sheets included hereunder.

FORM ELI-1.1Tenderer

Information Form

Date:_____

ITT No. and title:_____

Tenderer's name
In case of Joint Venture (JV), name of each member:
Tenderer's actual or intended country of registration: *[icate country of Constitution]*
Tenderer's actual or intended year of incorporation:
Tenderer's legal address [in country of registration]:
Tenderer's authorized representative information Name: _____ Address: _____ Telephone/Fax numbers: _____ E-mail address: _____
1. Attached are copies of original documents of ☐ Articles of Incorporation (or equivalent documents of constitution or association), and/or documents of registration of the legal entity named above, in accordance with ITT 3.6 ☐ In case of JV, letter of intent to form JV or JV agreement, in accordance with ITT 3.5 ☐ In case of state-owned enterprise or institution, in accordance with ITT 3.8, documents establishing: Legal and financial autonomy Operation under commercial law Establishing that the Tenderer is not under the supervision of the Procuring Entity 2. Included are the organizational chart, a list of Board of Directors, and the beneficial ownership.

FORM ELI-1.2

Tenderer's JV Information Form
(To be completed for each member of Tenderer's JV)

Date:_____

ITT No. andtitle:_____

Tenderer's JV name:
JV member's name:
JV member's country of registration:
JV member's year of constitution:
JV member's legal address in country of constitution:
JV member's authorized representative information Name: _____ Address: _____ Telephone/Fax numbers: _____ E-mail address: _____
1. Attached are copies of original documents of ☐ Articles of Incorporation (or equivalent documents of constitution or association), and/or registration documents of the legal entity named above, in accordance with ITT 43.6. ☐ In case of a state-owned enterprise or institution, documents establishing legal and financial autonomy, operation in accordance with commercial law, and that they are not under the supervision of the Procuring Entity, in accordance with ITT 3.8. 2. Included are the organizational chart, a list of Board of Directors, and the beneficial ownership.

FORM CON – 2

Historical Contract Non-Performance, Pending Litigation and Litigation History

Tenderer'sName:_____

Date:_____

JV Member's Name_____

ITT No. and title:_____

Non-Performed Contracts in accordance with Section III, Evaluation and Qualification Criteria			
☐ Contract non-performance did not occur since 1st July *[2018]* specified in Section III, Evaluation and Qualification Criteria, Sub-Factor 2.1. ☐ Contract(s) not performed since 1st July *[2018]* specified in Section III, Evaluation and Qualification Criteria, requirement 2.1			
Year	**Non- performed portion of contract**	**Contract Identification**	**Total Contract Amount (current value, currency, exchange rate and Kenya Shilling equivalent)**
[insert year]	*[insert amount and percentage]*	Contract Identification: *[indicate complete contract name/ number, and any other identification]* Name of Procuring Entity: *[insert full name]* Address of Procuring Entity: *[insert street/city/country]* Reason(s) for nonperformance: *[indicate main reason(s)]*	*[insert amount]*
Pending Litigation, in accordance with Section III, Evaluation and Qualification Criteria			
☐ No pending litigation in accordance with Section III, Evaluation and Qualification Criteria, Sub-Factor 2.3. ☐ Pending litigation in accordance with Section III, Evaluation and Qualification Criteria, Sub-Factor 2.3 as indicated below.			

Year of dispute	Amount in dispute (currency)	Contract Identification	Total Contract Amount (currency), Kenya Shilling Equivalent (exchange rate)
		Contract Identification: _____ Name of Procuring Entity: _____ Address of Procuring Entity: _____ Matter in dispute: _____ Party who initiated the dispute: ____ Status of dispute: _____	
		Contract Identification: Name of Procuring Entity: Address of Procuring Entity: Matter in dispute: Party who initiated the dispute: Status of dispute:	

Litigation History in accordance with Section III, Evaluation and Qualification Criteria

☐ No Litigation History in accordance with Section III, Evaluation and Qualification Criteria, Sub-Factor 2.4.

☐ Litigation History in accordance with Section III, Evaluation and Qualification Criteria, Sub-Factor 2.4 as indicated below.

Year of award	Outcome as percentage of Net Worth	Contract Identification	Total Contract Amount (currency), Kenya Shilling Equivalent (exchange rate)
[insert year]	*[insert percentage]*	Contract Identification: [indicate complete contract name, number, and any other identification] Name of Procuring Entity: *[insert full name]* Address of Procuring Entity: *[insert street/city/country]* Matter in dispute: *[indicate main issues in dispute]* Party who initiated the dispute: *[indicate "Procuring Entity" or "Contractor"]* Reason(s) for Litigation and award decision *[indicate main reason(s)]*	*[insert amount]*

FORM FIN –3.1:

Financial Situation and Performance

Tenderer's Name:_____
Date:_____
JV Member's Name_____
ITT No. and title:_____

Financial Data

Type of Financial information in_____ (currency)	**Historic information for previous _____*years*, _____ (amount in currency, currency, exchange rate*, USD equivalent)**				
	Year 1	Year 2	Year 3	Year 4	Year 5
Statement of Financial Position (Information from Balance Sheet)					
Total Assets (TA)					
Total Liabilities (TL)					
Total Equity/Net Worth (NW)					
Current Assets (CA)					
Current Liabilities (CL)					
Working Capital (WC)					
Information from Income Statement					
Total Revenue (TR)					
Profits Before Taxes (PBT)					
Cash Flow Information					
Cash Flow from Operating Activities					

**Refer to ITT 15 for the exchange rate*

Sources of Finance

Specify sources of finance to meet the cash flow requirements on works currently in progress and for future contract commitments.

No.	Source of finance	Amount (Kenya Shilling equivalent)
1		
2		
3		

Financial documents

The Tenderer and its parties shall provide copies of financial statements for_____years pursuant Section III, Evaluation and Qualifications Criteria, Sub-factor 3.1. The financial statements shall:

reflect the financial situation of the Tenderer or incase of JV member, and not an affiliated entity (such as parent company or group member).

be independently audited or certified in accordance with local legislation.

be complete, including all notes to the financial statements.

correspond to accounting periods already completed and audited.

Attached are copies of financial statements [1] for the_____years required above; and complying with the requirements

FORM FIN – 3.2:

Average Annual Construction Turnover

Tenderer's Name:_____

Date:_____

JV Member's Name_____

ITT No. and title:_____

	Annual turnover data (construction only)		
Year	**Amount Currency**	**Exchange rate**	**Kenya Shilling equivalent**
[indicate year]	*[insert amount and indicate currency]*		
Average Annual Construction Turnover *			

* See Section III, Evaluation and Qualification Criteria, Sub-Factor 3.2.

FORM FIN –3.3:

Financial Resources

Specify proposed sources of financing, such as liquid assets, unencumbered real assets, lines of credit, and other financial means, net of current commitments, available to meet the total construction cashflow demands of the subject contractor contracts as specified in Section III, Evaluation and Qualification Criteria.

FORM FIN–3.4:

Current Contract Commitments / Works in Progress

Tenderers and each member to a JV should provide information on their current commitments on all contracts that have been awarded, or for which a letter of intent or acceptance has been received, or for contracts approaching completion, but for which an unqualified, full completion certificate has yet to be issued.

Starting Year	Ending Year	Contract Identification	Role of Tenderer
		Contract name: _____ Brief Description of the Works performed by the Tenderer: _____ Amount of contract: _____ Name of Procuring Entity: _____ Address: _____	
		Contract name: _____ Brief Description of the Works performed by the Tenderer: _____ Amount of contract: _____ Name of Procuring Entity: _____ Address: _____	
		Contract name: _____ Brief Description of the Works performed by the Tenderer: _____ Amount of contract: _____ Name of Procuring Entity: _____ Address: _____	

FORM EXP -4.1

General Construction Experience

Tenderer's Name:_____
Date:_____
JV Member's Name:_____
ITT No. and title:_____

Similar Contract No.	**Information**			
Contract Identification				
Award date				
Completion date				
Role in Contract	Prime Contractor ☐	Member in JV ☐	Management Contractor ☐	Sub-contractor ☐
Total Contract Amount			**Kenya Shilling**	
If member in a JV or sub-contractor, specify participation in total Contract amount				
Procuring Entity's Name:				
Address: Telephone/fax number E-mail:				

FORM EXP -4.2(a)

Specific Construction and Contract Management Experience

Tenderer's Name:_____
Date:_____
JV Member's Name_____
ITT No. and title:_____

Similar Contract No.	**Information**
Description of the similarity in accordance with Sub-Factor 4.2(a) of Section III:	
1. Amount	
2. Physical size of required works items	
3. Complexity	
4. Methods/Technology	
5. Construction rate for key activities	
6. Other Characteristics	

FORM EXP -4.2(b)

Construction Experience in Key Activities

Tenderer's Name:_____
Date:_____
Tenderer's JV Member Name:_____
Sub-contractor's Name[2] (as perITT34):_____
ITT No. and title:_____

All Sub-contractors for key activities must complete the information in this form as per ITT 34 and Section III, Evaluation and Qualification Criteria, Sub-Factor 4.2.

Key Activity No One: _

	Information			
Contract Identification				
Award date				
Completion date				
Role in Contract	Prime Contractor ☐	Member in JV ☐	Management Contractor ☐	Sub-contractor ☐
Total Contract Amount			**Kenya Shilling**	
Quantity (Volume, number or rate of production, as applicable) performed under the contract per year or part of the year	Total quantity in the contract (i)	Percentage participation (ii)		Actual Quantity Performed (i) x (ii)
Year 1				
Year 2				
Year 3				
Year 4				
Procuring Entity's Name:				
Address: Telephone/fax number E-mail:				

	Information
Description of the key activities in accordance with Sub-Factor 4.2(b) of Section III:	

Activity No. Two

. ……

OTHER FORMS

FORM OF TENDER

INSTRUCTIONS TO TENDERERS

The Tenderer must prepare this Form of Tender on stationery with its letterhead clearly showing the Tenderer's complete name and business address.

All italicized text is to help Tenderer in preparing this form.

Tenderer must complete and sign CERTIFICATE OF INDEPENDENT TENDER DETERMINATION and the SELF DECLARATION OF THE TENDERER attached to this Form of Tender.

The Form of Tender shall include the following Forms duly completed with Tenderer's letterhead and signed by the Tenderer.

Tenderer's Eligibility-Confidential Business Questionnaire.

Certificate of Independent Tender Determination.

Self-Declaration of the Tenderer.

Date of this Tender submission: [*insert date (as day, month and year) of Tender submission*] **Request for Tender No.:** [*insert identification*] **Name and description of Tender** *[Insert as per ITT)* **Alternative No.:** [*insert identification No if this is a Tender for an alternative*]

To: [*insert complete name of Procuring Entity*]

Dear Sirs,

In accordance with the Conditions of Contract, Specifications, Drawings and Bills of Quantities for the execution of the above named Works, we, the undersigned offer to construct and complete the Works and remedy any defects therein for the sum of Kenya Shillings [*[Amount in figures]* _____Kenya Shillings *[amount in words]*_____

The above amount includes foreign currency amount (s) of [*state figure or a percentage and currency*] [figures] _____[words]_____

The percentage or amount quoted above does not include provisional sums, and only allows not more than two foreign currencies.

We undertake, if our tender is accepted, to commence theWorks as soon as is reasonably possible after the receipt of the Engineer's notice to commence, and to complete the whole of the Works comprised in the Contract within the time stated in the Particular Conditions of Contract.

We agree to adhere by this tender until_____*[Insert date]*, and it shall remain binding upon us and may be accepted at any time before that date.

Unless and until a formal Agreement is prepared and executed this tender together with your written acceptance thereof, shall constitute abinding Contract between us. We further understand that you are not bound to accept the lowest or any tender you may receive.

We, the undersigned, further declare that:

No reservations: We have examined and have no reservations to the tender document, including Addenda issued in accordance with ITT 8;

Eligibility: We meet the eligibility requirements and have no conflict of interest in accordance with ITT 3 and 4;

Tender-Securing Declaration: We have not been suspended nor declared ineligible by the Procuring Entity based on execution of a Tender-Securing or Proposal-Securing Declaration in the Procuring Entity's Country in accordance with ITT 19.8;

Conformity: We offer to execute in conformity with the tendering documents and in accordance with the implementation and completion specified in the construction schedule, the following Works: *[insert a brief description of the Works];*

Tender Price: The total price of our Tender, excluding any discounts offered in item 1 above is: *[Insert one of the options below as appropriate]*

Option1, incase of one lot: Total price is: [*insert the total price of the Tender in words and figures, indicating the various amounts and the respective currencies*]; Or

Option2, in case of multiple lots:

Total price of each lot [*insert the total price of each lot in words and figures, indicating the various amounts and the respective currencies*]; and

Total price of all lots (sum of all lots) [*insert the total price of all lots in words and figures, indicating the various amounts and the respective currencies*];

Discounts: The discounts offered and the methodology for their application are:

The discounts offered are: [*Specify in detail each discount offered.*]

The exact method of calculations to determine the net price after application of discounts is shown below: [*Specify in detail the method that shall be used to apply the discounts*];

Tender Validity Period: Our Tender shall be valid for the period specified in TDS 18.1 (as amended, if applicable) from the date fixed for the Tender submission deadline specified in TDS 22.1(as amended, if applicable), and it shall remain binding upon us and may be accepted at any time before the expiration of that period;

Performance Security: If our Tender is accepted, we commit to obtain a Performance Security in accordance with the Tendering document;

One Tender Per Tender: We are not submitting any other Tender(s) as an individual Tender, and we are not participating in any other Tender(s) as a Joint Venture member or as a subcontractor, and meet the requirements of ITT3.4, other than alternative Tenders submitted in accordance with ITT 13.3;

Suspension and Debarment: We, along with any of our subcontractors, suppliers, Engineer, manufacturers, or service providers for any part of the contract, are not subject to, and not controlled by any entity or individual that is subject to, a temporary suspension or a debarment imposed by the Public Procurement Regulatory Authority or any other entity of the Government of Kenya, or any international organization.

State-owned enterprise or institution: [*select the appropriate option and delete the other*] [*We are not a state- owned enterprise or institution*]/[*We are a state-owned enterprise or institution but meet the requirements of ITT 3.7*];

Commissions, gratuities, fees: We have paid, or will pay the following commissions, gratuities, or fees with respect to the tender process or execution of the Contract: *[insert complete name of each Recipient, its full address, the reason for which each commission or gratuity was paid and the amount and currency of each such commission or gratuity]*

Name of Recipient	**Address**	**Reason**	**Amount**

(If none has been paid or is to be paid, indicate "none.")

Binding Contract: We understand that this Tender, together with your written acceptance thereof included in your Letter of Acceptance, shall constitute a binding contract between us, until a formal contract is prepared and executed;

Not Bound to Accept: We understand that you are not bound to accept the lowest evaluated cost Tender, the Most Advantageous Tender or any other. Tender that you may receive;

Fraud and Corruption: We hereby certify that we have taken steps to ensure that no person acting for us or on our behalf engages in any type of Fraud and Corruption;

Collusive practices: We hereby certify and confirm that the tender is genuine, non-collusive and made with the intention of accepting the contract if awarded. To this effect we have signed the "Certificate of Independent Tender Determination" attached below.

We undertake to adhere by the Code of Ethics for Persons Participating in Public Procurement and Asset Disposal, copy available from_____(*specify website*) during the procurement process and the execution of any resulting contract.

We, the Tenderer, have completed fully and signed the following Forms as part of our Tender:

Tenderer's Eligibility; Confidential Business Questionnaire – to establish we are not in any conflict to interest.

Certificate of Independent Tender Determination – to declare that we completed the tender without colluding with other tenderers.

Self-Declaration of the Tenderer– to declare that we will, if awarded a contract, not engage in any form of fraud and corruption.

Declaration and commitment to the Code of Ethics for Persons Participating in Public Procurement and Asset Disposal.

Further, we confirm that we have read and understood the full content and scope of fraud and corruption as informed in **"Appendix 1- Fraud and Corruption**" attached to the Form of Tender.

Name of the Tenderer: *[*insert complete name of person signing the Tender*]

Name of the person duly authorized to sign the Tender on behalf of the Tenderer: **[*insert complete name of person duly authorized to sign the Tender*]

Title of the person signing the Tender: [*insert complete title of the person signing the Tender*]

Signatureof the person named above: [*insert signature of person whose name and capacity are shown*

above] **Date signed** [*insert date of signing*] day of [*insert month*], [*insert year*]

Date signed_____day of_____,_____

Notes
** In the case of the Tender submitted by joint venture specify the name of the Joint Venture as Tenderer*
*** Person signing the Tender shall have the power of attorney given by the Tenderer to be attached with the Tender,*

TENDERER'S ELIGIBILITY-CONFIDENTIAL BUSINESS QUESTIONNAIRE

Instruction to Tenderer

Tender is instructed to complete the particulars required in this Form, *one form for each entity if Tender is a JV.*
Tenderer is further reminded that it is an offence to give false information on this Form.

Tenderer's details

	ITEM	**DESCRIPTION**
1	Name of the Procuring Entity	
2	Reference Number of the Tender	
3	Date and Time of Tender Opening	
4	Name of the Tenderer	
5	Full Address and Contact Details of the Tenderer.	Country City Location Building Floor Postal Address Name and email of contact person.
6	Current Trade License Registration Number and Expiring date	
7	Name, country and full address (*postal and physical addresses, email, and telephone number*) of Registering Body/Agency	
8	Description of Nature of Business	
9	Maximum value of business which the Tenderer handles.	
10	State if Tenders Company is listed in stock exchange, give name and full address (*postal and physical addresses, email, and telephone number*) of state which stock exchange	

General and Specific Details

Sole Proprietor, provide the following details.

Name in full_____Age_____
Nationality_____Country of Origin_____
Citizenship _____

Partnership, provide the following details.

	Names of Partners	Nationality	Citizenship	% Shares owned
1				
2				
3				

Registered Company, provide the following details.

Private or public Company _____

State the nominal and issued capital of the Company

Nominal Kenya Shillings (Equivalent).....

Issued Kenya Shillings (Equivalent).....

Give details of Directors as follows.

	Names of Director	Nationality	Citizenship	% Shares owned
1				
2				
3				

DISCLOSURE OF INTEREST- Interest of the Firm in the Procuring Entity.

Are there any person/persons in…… (*Name of Procuring Entity)* who has/have an interest or relationship in this firm? Yes/No……

If yes, provide details as follows.

	Names of Person	Designation in the Procuring Entity	Interest or Relationship with Tenderer
1			
2			
3			

Conflict of interestdisclosure

	Type of Conflict	Disclosure YES OR NO	If YES provide details of the relationship with Tenderer
1	Tenderer is directly or indirectly controls, is controlled by or is under common control with another tenderer.		
2	Tenderer receives or has received any direct or indirect subsidy from another tenderer.		
3	Tenderer has the same legal representative as another tenderer		
4	Tender has a relationship with another tenderer, directly or through common third parties that puts it in a position to influence the tender of another tenderer, or influence the decisions of the Procuring Entity regarding this tendering process.		
5	Any of the Tenderer's affiliates participated as a consultant in the preparation of the design or technical specifications of the works that are the subject of the tender.		
6	Tenderer would be providing goods, works, non-consulting services or consulting services during implementation of the contract specified in this Tender Document.		
7	Tenderer has a close business or family relationship with a professional staff of the Procuring Entity who are directly or indirectly involved in the preparation of the Tender document or specifications of the Contract, and/or the Tender evaluation process of such contract.		
8	Tenderer has a close business or family relationship with a professional staff of the Procuring Entity who would be involved in the implementation or supervision of such Contract.		
9	Has the conflict stemming from such relationship stated in item 7 and 8 above been resolved in a manner acceptable to the Procuring Entity throughout the tendering process and execution of the Contract?		

Certification

On behalf of the Tenderer, I certify that the information given above is complete, current and accurate as at the date of submission.

Full Name_____ Title or Designation_____

CERTIFICATE OF INDEPENDENT TENDER DETERMINATION

I, the undersigned, in submitting the accompanying Letter of Tender to the_____[Name of Procuring Entity] for:_____[Name and number of tender] in response to the request for tenders made by:_____[Name of Tenderer] do hereby make the following statements that I certify to be true and complete in every respect:

I certify, on behalf of_____[Name of Tenderer] that:

I have read and I understand the contents of this Certificate;

I understand that the Tender will be disqualified if this Certificate is found not to be true and complete in every respect;

I am the authorized representative of the Tenderer with authority to sign this Certificate, and to submit theTender on behalf of the Tenderer;

For the purposes of this Certificate and the Tender, I understand that the word "competitor" shall include any individual or organization, other than the Tenderer, whether or not affiliated with the Tenderer, who:

has been requested to submit a Tender in response to this request for tenders;

could potentially submit a tender in response to this request for tenders, based on their qualifications, abilities or experience;

The Tenderer discloses that [check one of the following, as applicable]:

The Tenderer has arrived at the Tender independently from, and without consultation, communication, agreement or arrangement with, any competitor;

theTenderer has entered into consultations, communications, agreements or arrangements with one or more competitors regarding this request for tenders, and the Tenderer discloses, in the attached document(s), complete details thereof, including the names of the competitors and the nature of, and reasons for, such consultations, communications, agreements or arrangements;

In particular, without limiting the generality of paragraphs (5) (a) or (5) (b) above, there has been no consultation, communication, agreement or arrangement with any competitor regarding:

prices;

methods, factors or formulas used to calculate prices;

the intention or decision to submit, or not to submit, a tender; or

the submission of a tender which does not meet the specifications of the request for Tenders; except as specifically disclosed pursuant to paragraph (5) (b) above;

In addition, there has been no consultation, communication, agreement or arrangement with any competitor regarding the quality, quantity, specifications or delivery particulars of the works or services to which this request for tenders relates, except as specifically authorized by the procuring authority or as specifically disclosed pursuant to paragraph (5) (b) above;

The terms of the Tender have not been, and will not be, knowingly disclosed by the Tenderer, directly or indirectly, to any competitor, prior to the date and time of the official tender opening, or of the awarding of the Contract, whichever comes first, unless otherwise required by law or as specifically disclosed pursuant to paragraph (5) (b) above.

Name_____

Title_____

Date_____

[Name, title and signature of authorized agent of Tenderer and Date]

SELF-DECLARATION FORMS

FORM SD1

SELF DECLARATION THAT THE PERSON/TENDERER IS NOT DEBARRED IN THE MATTER OF THE PUBLIC PROCUREMENT AND ASSET DISPOSAL ACT 2015.

I, ……., of Post Office Box ……. being a resident of …….. in the Republic of ……. do hereby make a statement as follows: -

THAT I am the Company Secretary/Chief Executive/Managing Director/Principal Officer/Director of ……...…….. *(insert name of the Company)* who is a Bidder in respect of Tender No. …….. for ……. *(insert tender title/description)* for ……. *(insert name of the Procuring entity)* and duly authorized and competent to make this statement.

THAT the aforesaid Bidder, its Directors and subcontractors have not been debarred from participating in procurement proceeding under Part IV of the Act.

THAT what is deponed to herein above is true to the best of my knowledge, information and belief.

……..	…….	……
(Title)	(Signature)	(Date)

Bidder Official Stamp

FORM SD2

SELF DECLARATION THAT THE TENDERER WILL NOT ENGAGE IN ANY CORRUPT OR FRAUDULENT PRACTICE

I, ……. of P. O. Box ……. being a resident of……. in the Republic of…_____……. .do hereby make a statement as follows: -

THAT I am the Chief Executive/Managing Director/PrincipalOfficer/Director of ……...…… *(insert name of the Company)* who is a Bidder in respect of Tender No. …….. for ……... *(insert tender title/description)* for …… *(insert name of the Procuring entity)* and duly authorized and competent to make this statement.

THAT the aforesaid Bidder, its servants and/or agents /subcontractors will not engage in any corrupt or fraudulent practice and has not been requested to pay any inducement to any member of the Board, Management, Staff and/or employees and/or agents of……. *(insert name of the Procuring entity)* which is the procuring entity.

THAT the aforesaid Bidder, its servants and/or agents /subcontractors have not offered any inducement toany member of the Board, Management, Staff and/or employees and/or agents of……... *(name of the procuring entity)*

THAT the aforesaid Bidder will not engage/has not engaged in any corrosive practice with other bidders participating in the subject tender

THAT what is deponed to herein above is true to the best of my knowledge, information and belief.

…… …… ……
(Title) (Signature) (Date)

Bidder's Official Stamp

DECLARATION AND COMMITMENT TO THE CODE OF ETHICS

I …….....……. (person) on behalf of *(Name of the Business/Company/Firm*) …….....declare that I have read and fully understood the contents of the Public Procurement & Asset Disposal Act, 2015, Regulations and the Code of Ethics for persons participating in Public Procurement and Asset Disposal and my responsibilities under the Code.

I do hereby commit to abide by the provisions of the Code of Ethics for persons participating in Public Procurement and Asset Disposal.

Name of Authorized signatory.....

Sign.....

Position.....

Office address..... Telephone.....
E-mail.....
Name of the Firm/Company.....
Date.....

(Company Seal/Rubber Stamp where applicable)
Witness

Name.....

Sign.....

Date.....

APPENDIX 1-FRAUD AND CORRUPTION

(Appendix 1 shall not be modified)

Purpose

The Government of Kenya's Anti-Corruption and Economic Crime laws and their sanction's policies and procedures, Public Procurement and Asset Disposal Act *(no. 33 of 2015)* and its Regulation, and any other Kenya's Acts or Regulations related to Fraud and Corruption, and similar offences, shall apply with respect to Public Procurement Processes and Contracts that are governed by the laws of Kenya.

Requirements

The Government of Kenya requires that all parties including Procuring Entities, Tenderers, (applicants/proposers), Consultants, Contractors and Suppliers; any Sub-contractors, Sub-consultants, Service providers or Suppliers; any Agents (whether declared or not); and any of their Personnel, involved and engaged in procurement under Kenya's Laws and Regulation, observe the highest standard of ethics during the procurement process, selection and contract execution of all contracts, and refrain from Fraud and Corruption and fully comply with Kenya's laws and Regulations as per paragraphs 1.1 above.

Kenya's public procurement and asset disposal act *(no. 33 of 2015)* under Section 66 describes rules to be followed and actions to be taken in dealing with Corrupt, Coercive, Obstructive, Collusive or Fraudulent practices, and Conflicts of Interest in procurement including consequences for offences committed. A few of the provisions noted below highlight Kenya's policy of no tolerance for such practices and behavior:

a person to whom this Act applies shall not be involved in any corrupt, coercive, obstructive, collusive or fraudulent practice; or conflicts of interest in any procurement or asset disposal proceeding;

A person referred to under subsection (1) who contravenes the provisions of that sub-section commits an offence;

Without limiting the generality of the subsection (1) and (2), the person shall be—
disqualified from entering into a contract for a procurement or asset disposal proceeding; or
if a contract has already been entered into with the person, the contract shall be voidable;

The voiding of a contract by the procuring entity under subsection (7) does not limit any legal remedy the procuring entity may have;

An employee or agent of the procuring entity or a member of the Board or committee of the procuring entity who has a conflict of interest with respect to a procurement—
shall not take part in the procurement proceedings;
shall not, after a procurement contract has been entered into, take part in any decision relating to the procurement or contract; and
shall not be a subcontractor for the bidder to whom was awarded contract, or a member of the group of bidders to whom the contract was awarded, but the subcontractor appointed shall meet all the requirements of this Act.

An employee, agent or member described in subsection (1) who refrains from doing anything prohibited under that subsection, but for that subsection, would have been within his or her duties shall disclose the conflict of interest to the procuring entity;

If a person contravenes subsection (1) with respect to a conflict of interest described in subsection (5) (a) and the contract is awarded to the person or his relative or to another person in whom one of them had a director indirect pecuniary interest, the contract shall be terminated and all costs incurred by the public entity shall be made good by the awarding officer. Etc.

In compliance with Kenya's laws, regulations and policies mentioned above, the Procuring Entity:
Defines broadly, for the purposes of the above provisions, the terms set forth below as follows:

“corrupt practice” is the offering, giving, receiving, or soliciting, directly or indirectly, of anything of value to influence improperly the actions of another party;

“fraudulent practice” is any act or omission, including misrepresentation, that knowingly or recklessly misleads, or attempts to mislead, a party to obtain financial or other benefit or to avoid an obligation;

“collusive practice” is an arrangement between two or more parties designed to achieve an improper purpose, including to influence improperly the actions of another party;

“coercive practice” is impairing or harming, or threatening to impair or harm, directly or indirectly, any party or the property of the party to influence improperly the actions of a party;

“obstructive practice” is:

deliberately destroying, falsifying, altering, or concealing of evidence material to theinvestigation or making false statements to investigators in order to materially impede investigation by Public Procurement Regulatory Authority (PPRA) or any other appropriate authority appointed by Government of Kenya into allegations of a corrupt, fraudulent, coercive, or collusive practice; and/or threatening, harassing, or intimidating any party to prevent it from disclosing its knowledge of matters relevant to the investigation or from pursuing the investigation; or

acts intended to materially impede the exercise of the PPRA's or the appointed authority's inspection and audit rights provided for under paragraph 2.3 e. below.

Defines more specifically, in accordance with the above procurement Act provisions set forth for fraudulent and collusive practices as follows:

"fraudulent practice" includes a misrepresentation of fact in order to influence a procurement or disposal process or the exercise of a contract to the detriment of the procuring entity or the tenderer or the contractor, and includes collusive practices amongst tenderers prior to or after tender submission designed to establish tender prices at artificial non-competitive levels and to deprive the procuring entity of the benefits of free and open competition.

Rejects a proposal for award[1] of a contract if PPRA determines that the firm or individual recommended for award, any of its personnel, or its agents, or its sub-consultants, sub-contractors, service providers, suppliers and/ or their employees, has, directly or indirectly, engaged in corrupt, fraudulent, collusive, coercive, or obstructive practices in competing for the contract in question;

Pursuant to the Kenya's above stated Acts and Regulations, may sanction or recommend to appropriate authority(ies) for sanctioning and debarment of a firm or individual, as applicable under the Acts and Regulations;

Requires that a clause be included in Tender documents and Request for Proposal documents requiring (i) Tenderers (applicants/proposers), Consultants, Contractors, and Suppliers, and their Sub-contractors, Sub- consultants, Service providers, Suppliers, Agents personnel, permit the PPRA or any other appropriate authority appointed by Government of Kenya to inspect[2] all accounts, records and other documents relating to the procurement process, selection and/or contract execution, and to have them audited by auditors appointed by the PPRA or any other appropriate authority appointed by Government of Kenya; and

Pursuant to Section 62 of the above Act, requires Applicants/Tenderers to submit along with their Applications/Tenders/Proposals a “Self-Declaration Form” as included in the procurement document declaring that they and all parties involved in the procurement process and contract execution have not engaged/will not engage in any corrupt or fraudulent practices.

[1] *For the avoidance of doubt, a party's ineligibility to be awarded a contract shall include, without limitation, (i) applying for pre-qualification, expressing interest in a consultancy, and tendering, either directly or as a nominated sub-contractor, nominated consultant, nominated manufacturer or supplier, or nominated service provider, in respect of such contract, and (ii) entering into an addendum or amendment introducing a material modification to any existing contract.*

[2] *Inspections in this context usually are investigative (i.e., forensic) in nature. They involve fact-finding activities undertaken by the Investigating Authority or persons appointed by the Procuring Entity to address specific matters related to investigations/audits, such as evaluating the veracity of an allegation of possible Fraudand Corruption, through the appropriate mechanisms. Such activity includes but is not limited to: accessing and examining a firm's or individual's financial records and information, and making copies thereof as relevant; accessing and examining any other documents, data and information (whether in hard copy or electronic format) deemed relevant for the investigation/audit, and making copies thereof as relevant; interviewing staff and other relevant individuals; performing physical inspections and site visits; and obtaining third party verification of information.*

FORM OF TENDER SECURITY-[Option 1–Demand Bank Guarantee]

Beneficiary:_____

Request forTenders No:

_____

Date:_____

TENDER GUARANTEE No.:_____

Guarantor: _____

We have been informed that_____(here inafter called "the Applicant") has submitted or will submit to the Beneficiary its Tender (here inafter called" the Tender") for the execution of_____ under Request for Tenders No._____("the ITT").

Furthermore, we understand that, according to the Beneficiary's conditions, Tenders must be supported by a Tender guarantee.

At the request of the Applicant, we, as Guarantor, hereby irrevocably undertake to pay the Beneficiary any sum or sums not exceeding in total an amount of_____(_____) upon receipt by us of the Beneficiary's complying demand, supported by the Beneficiary's statement, whether in the demand itself or a separate signed document accompanying or identifying the demand, stating that either the Applicant:

(a) has withdrawn its Tender during the period of Tender validity set forth in the Applicant's Letter of Tender ("the Tender Validity Period"), or any extension thereto provided by the Applicant; or

b) having been notified of the acceptance of its Tender by the Beneficiary during the Tender Validity Period or any extension there to provided by the Applicant, (i) has failed to execute the contract agreement, or (ii) has failed to furnish the Performance.

This guarantee will expire: (a) if the Applicant is the successful Tenderer, upon our receipt of copies of the contract agreement signed by the Applicant and the Performance Security and, or (b) if the Applicant is not the successful Tenderer, upon the earlier of (i) our receipt of a copy of the Beneficiary's notification to the Applicant of the results of the Tendering process; or (ii) thirty days after the end of the Tender Validity Period.

Consequently, any demand for payment under this guarantee must be received by us at the office indicated above onor before that date.

[signature(s)]

Note: All italicized text is for use in preparing this form and shall be deleted from the final product.

FORMAT OF TENDER SECURITY [Option 2–Insurance Guarantee]

TENDER GUARANTEE No.: _____

Whereas …… [*Name of the tenderer]* (hereinafter called "the tenderer") has submitted its tender dated …… [*Date of submission of tender]* for the …… *[Name and/or description of the tender]* (hereinafter called "the Tender") for the execution of_under Request for Tenders No._____("the ITT").

KNOW ALL PEOPLE by these presents that WE …… of …… [**Name of Insurance Company**] having our registered office at …… (hereinafter called "the Guarantor"), are bound unto …….. [*Name of Procuring Entity*] (hereinafter called "the Procuring Entity") in the sum of …… (Currency and guarantee amount) for which payment well and truly to be made to the said Procuring Entity, the Guarantor binds itself, its successors and assigns, jointly and severally, firmly by these presents.

Sealed with the Common Seal of the said Guarantor this ___day of _____ 20 __.

NOW, THEREFORE, THE CONDITION OF THIS OBLIGATION is such that if the Applicant:

has withdrawn its Tender during the period of Tender validity set forth in the Principal's Letter of Tender ("the Tender Validity Period"), or any extension thereto provided by the Principal; or

having been notified of the acceptance of its Tender by the Procuring Entity during the Tender Validity Period or any extension thereto provided by the Principal; (i) failed to execute the Contract agreement; or (ii) has failed to furnish the Performance Security, in accordance with the Instructions to tenderers ("ITT") of the Procuring Entity's Tendering document.

then the guarantee undertakes to immediately pay to the Procuring Entity up to the above amount upon receipt of the Procuring Entity's first written demand, without the Procuring Entity having to substantiate its demand, provided that in its demand the Procuring Entity shall state that the demand arises from the occurrence of any of the above events, specifying which event(s) has occurred.

This guarantee will expire: (a) if the Applicant is the successful Tenderer, upon our receipt of copies of the contract agreement signed by the Applicant and the Performance Security and, or (b) if the Applicant is not the successful Tenderer, upon the earlier of (i) our receipt of a copy of the Beneficiary's notification to the Applicant of the results of the Tendering process; or (ii)twenty-eight days after the end of the Tender Validity Period.

Consequently, any demand for payment under this guarantee must be received by us at the office indicated above on or before that date.

_____	_____
[Date]	*[Signature of the Guarantor]*
_____	_____
[Witness]	*[Seal]*

Note: All italicized text is for use in preparing this form and shall be deleted from the final product.

FORM OF TENDER-SECURING DECLARATION

[The Bidder shall complete this Form in accordance with the instructions indicated] Date:.....

[Insert date (as day, month and year) of Tender Submission]

Tender No.:..... . *[Insert number of tendering process]*

To:..... *[Insert complete name of Procuring Entity]*

I/We, the undersigned, declare that:

I/We understand that, according to your conditions, bids must be supported by a Tender-Securing Declaration.

I/We accept that I/we will automatically be suspended from being eligible for tendering in any contract with the Purchaser for the period of time of [insert number of months or years] starting on [insert date], if we are in breach of our obligation(s) under the bid conditions, because we–(a) have withdrawn our tender during the period of tender validity specified by us in the Tendering Data Sheet; or (b) having been notified of the acceptance of our Bid by the Purchaser during the period of bid validity, (i) fail or refuse to execute the Contract, if required, or (ii) fail or refuse to furnish the Performance Security, in accordance with the instructions to tenders.

I/We understand that this Tender Securing Declaration shall expire if we are not the successful Tenderer(s), upon the earlier of:
our receipt of a copy of your notification of the name of the successful Tenderer; or
thirty days after the expiration of our Tender.

I/We understand that if I am/we are/in a Joint Venture, the Tender Securing Declaration must be in the name of the Joint Venture that submits the bid, and the Joint Venture has not been legally constituted at the time of bidding, the Tender Securing Declaration shall be in the names of all future partners as named in the letter of intent.

Signed:……..……..

Capacity / title (director or partner or sole proprietor, etc.) …….…….

Name:…….. Duly

authorized to sign the bid for and on behalf of: *[insert complete name of Tenderer]* Dated

on……. day of.……. *[Insert date of signing]*

Seal or stamp

Appendix to Tender

Schedule of Currency requirements

Summary of currencies of the Tender for_____*[insert name of Section of the Works]*

Name of currency	***Amounts payable***
Local currency: _____	
Foreign currency #1: _____	
Foreign currency #2: _____	
Foreign currency #3: _____	
Provisional sums expressed in local currency _____	[To be entered by the Procuring Entity]

TECHNICAL PROPOSAL

The tender shall complete these sections as a Technical proposal to indicate how he/she intends to proceed with the works. The Procuring entity will review these Proposals and determine the extent to which they meet the required standards to complete the works.

Site Organization
[Insert Site Organization information]

Method Statement
[Insert Method Statement]

Mobilization Schedule
[Insert Mobilization Schedule]

Construction Schedule
[Insert Construction Schedule]

PART 2 - WORKS' REQUIREMENTS

SECTION V - BILLS OF QUANTITIES

SCOPE OF WORKS

Preamble

The Bills of Quantities shall be read in conjunction with the Instructions to Tenderers, General and Particular Conditions of Contract, Technical Specifications, and Drawings.

The quantities given in the Bills of Quantities are estimated and provisional, and are given to provide a common basis for tendering. The basis of payment will be the actual quantities of work ordered and carried out, as measured by the Contractor and verified by the Engineer and valued at the rates and prices tender in the priced Bills of Quantities, where applicable, and otherwise at such rates and prices as the Engineer may fix within the terms of the Contract.

The rates and prices tender in the priced Bills of Quantities shall, except in so far as it is otherwise provided under the Contract, include all Constructional Plant, labor, supervision, materials, erection, maintenance, insurance, profit, taxes, and duties, together with all general risks, liabilities, and obligations set out or implied in the Contract.

A rate or price shall be entered against each item in the priced Bills of Quantities, whether quantities are stated or not. The cost of Items against which the Contractor has failed to enter a rate or price shall be deemed to be covered by other rates and prices entered in the Bills of Quantities.

The whole cost of complying with the provisions of the Contract shall be included in the Items provided in the priced Bills of Quantities, and where no Items are provided, the cost shall be deemed to be distributed among the rates and prices entered for the related Items of Work.

General directions and descriptions of work and materials are not necessarily repeated nor summarized in the Bills of Quantities. References to the relevant sections of the Contract documentation shall be made before entering prices against each item in the priced Bills of Quantities.

Provisional Sums included and so designated in the Bills of Quantities shall be expended in whole or in part at the direction and discretion of the Engineer in accordance with Sub-Clause 13.5 and Clause 13.6 of the General Conditions.

The method of measurement of completed work for payment shall be in accordance with *[insert the name of a standard reference guide, or full details of the methods to be used]* [6].

BILL OF QUANTITIES: NO.1

GENERAL

ITEM	DESCRIPTION	UNIT	QTY	RATE	
1.01	Allow a prime cost sum (PC Sum) of 50,000 for materials testing	PC SUM		50,000	
1.02	E.O. item 1.01 for Contractor's Overheads Expenses and Profit	%			
1.03	Allow a prime cost sum for the R.E's 200,000 miscellaneous account	PC SUM			
1.04	E.O. item 1.03 for Contractor's overhead and profit	%			
1.05	Prime Sum of 50,000 for attendance to RE"s staff	PC SUM			
1.06	E. O. Item 1.05 for contractor's overhead and profit	%			
1.09	Provide erect and maintain publicity signs as directed by the Engineer	No.	2		
1.10	Allow a Prime Cost sum of 50,000 for Environmental mitigation as directed by the Engineer	PC SUM		50,000	
1.11	E. O. Item 1.10 or Contractor's overhead and profit	%			

BILL OF QUANTITIES: NO.4

SITE CLEARANCE AND TOP SOIL STRIPPING

ITEM	DESCRIPTION	UNIT	QTY	RATE	
4.01	Clear site for the bridge construction including removal of existing bridge structures, culverts etc. including vegetation and other deleterious materials and prepare ground for setting-out of the new structure.	Ha.	1.0		
4.02	Allow for river diversion to allow for construction of the bridge	Item	1		
4.3	Allow a sum of 400,000 for soil investigatios/ geotechnical investigations	Item			

BILL OF QUANTITIES: NO.5

EARTHWORKS FOR APPROACH ROADS

ITEM	DESCRIPTION	UNIT	QTY	RATE	
5.01	Provide and Fill in soft material for embankment as directed by the Engineer and compacted to 95% MDD (AASHTOT99)	M^3	126		
Total of Bill carried forward to summary					

BILL OF QUANTITIES: NO.7
EXCAVATION & FILLING FOR STRUCTURES.

ITEM	DESCRIPTION	UNIT	QTY	RATE	
7.01	Excavate in soft material to any depth for bridge foundation and spoil the excavated materials as directed by the Engineer.	m^3	120		
7.02	Excavate for protection works in soft material	m^3	40		
7.03	As item 7.01 but in hard material	m^3	5		
7.04	As item 7.02 but in hard material	m^3	5		
7.05	Provide and deposit graded granular material backfill around abutment, compact 100% MDD (AASHTO T99)	m^3	60		
7.06	Excavate for Gabions as specified or as directed by the Engineer.	m^3	60		
Total of Bill carried forward to summary					

BILL OF QUANTITIES: NO.9
PASSAGE OF TRAFFIC

ITEM	DESCRIPTION	UNIT	QTY	RATE	
	NOTE: Not withstanding the provision of Section 9 of Standard Specifications, no extra payments shall be due as all costs shall be deemed to be included in the rates inserted herein				
9.01	Construct diversion in maximum lengths of 50m sections as directed by the engineer including all signage, zoning, lighting and barriers	m	53		
9.02	Provide, spread, water and compact gravel of minimum CBR 30% on deviations and maintenance of road as directed by the engineer	m^3	45		
9.03	Provide a temporally wooden bridge for pedestrian	Item	1		
9.04	Maintain passage of traffic through the works	LS	1		
Total of Bill carried forward to summary					

BILL OF QUANTITIES: NO.10
GRAVEL WEARING COURSE

ITEM	DESCRIPTION	UNIT	QTY	RATE	
10.01	Provide , place and compact gravel wearing course compacted at 100% MDD (ASSHTO T99) Note: it is the contractor's responsibility to source for the material site and all the rates in this item will be deemed to have included excation for the gravel material, haulage, laying and compaction to standard specification	m^3	45		
Total of Bill carried forward to summary					

BILL OF QUANTITIES: NO.17

CONCRETE WORKS

ITEM No.	DESCRIPTION	UNIT	QTY	RATE	
	DECK Provide, place and compact the following classes of concrete as speficied				
17.01	Class 25/20 concrete	m^3	19		
	FORMWORK Provide, erect and afterwards dismantle and remove all the formwork as specified by the Engineer				
17.02	Formwork Class F1 Finish	m^2	42		
17.03	Formwork Class F3 Finish	m^2	8		
	Reinforcement Provide, bend and fix into positions high yield steel bars to BS4461 the following steel reinforcement as directed and as shown on the drawings				
17.04	Reinforcement bars of high yield strength to BS 4461, size 12mm and below	Ton	2		
17.05	Reinforcement bars of high yield strength to BS 4461, size 12mm and above	Ton	2		
	BEAMS Provide, place and compact the following classes of concrete as speficied				
17.06	Class 25/20 concrete	m^3	19		
	FORMWORK Provide, erect and afterwards dismantle and remove all the formwork as specified by the Engineer				
17.07	Formwork Class F1 Finish	m^2	63		
Total carried forward to next page					

BILL OF QUANTITIES: NO.17

CONCRETE WORKS CONTINUED

ITEM No.	DESCRIPTION	UNIT	QTY	RATE	
Brought forward from previous page					
	Reinforcement Provide, bend and fix into positions high yield steel bars to BS4461 the following steel reinforcement as directed and as shown on the drawings				
17.10	Reinforcement bars of high yield strength to BS 4461, size 12mm and below	Ton	1.7		
17.11	Reinforcement bars of high yield strength to BS 4461, size 12mm and above	Ton	1.7		
	CROSS BEAMS Provide, place and compact the following classes of concrete as speficied				
17.12	Class 25/20 concrete	m^3	10		
	FORMWORK Provide, erect and afterwards dismantle and remove all the formwork as specified by the Engineer				
17.13	Formwork Class F1 Finish	m^2	32		
	Reinforcement Provide, bend and fix into positions high yield steel bars to BS4461 the following steel reinforcement as directed and as shown on the drawings				
17.14	Reinforcement bars of high yield strength to BS 4461, size 12mm and below	Ton	0.9		
17.15	Reinforcement bars of high yield strength to BS 4461, size 12mm and above	Ton	0.7		
Total carried forward to next page					

BILL OF QUANTITIES: NO.17

CONCRETE WORKS CONTINUED

ITEM No.	DESCRIPTION	UNIT	QTY	RATE	
Brought forward from previous page					
	ABUTMENTS & WINGWALLS Provide, place and compact the following classes of concrete as speficied				
17.16	Class 15/20 for blinding	m^3	3		
17.17	Class 25/20 concrete	m^3	32		
	FORMWORK Provide, erect and afterwards dismantle and remove all the formwork as specified by the Engineer				
17.18	Formwork Class F1 Finish	m^2	100		
17.19	Formwork Class F3 Finish	m^2	100		
	Reinforcement Provide, bend and fix into positions high yield steel bars to BS4461 the following steel reinforcement as directed and as shown on the drawings				
17.20	Reinforcement bars of high yield strength to BS 4461, size 12mm and below	Ton	2		
17.21	Reinforcement bars of high yield strength to BS 4461, size 12mm and above	Ton	2		
Total of Bill carried forward to summary					

BILL OF QUANTITIES: No.20

ROAD FURNITURE

ITEM	DESCRIPTION	UNIT	QTY	RATE	
20.01	Provide and place new flex-beam guardrails complete with spacers, nuts, bolts and 'swarflex' ART 3240 guard rail reflectors every 4m and fittings as directed by the Engineer.	m	20		
20.02	Provide and place guardrail posts including bolts, nuts and weldings as shown on drawings or as directed by the Engineer.	No	10		
20.03	Provide & Place warning signs	No.	2		
Total of bill carried forward to summary					

BILL OF QUANTITIES: No.21

MISCELLANEOUS BRIDGE WORKS

ITEM	DESCRIPTION	UNIT	QTY	RATE	
	Waterproofing to Structures				
21.01	Provide and place bitumen emulsion or cutback bitumen/rubber latex emulsion to all structural concrete in contact with fill material or cut soil	m^2	80		
	Weepholes				
21.02	Provide and fix 75mm Diameter uPVC pipes to form weepholes in structure, include for filter fabric at inlet	No	20		
21.03	Provide and fix 75mm Diameter drain pipe to deck slab	No	6		
Total of Bill carried forward to Summary					

BILL OF QUANTITIES: No.25

HIV/AIDS

ITEM	DESCRIPTION	UNIT	QTY	RATE	
25.10	Allow a prime cost sum (PC Sum) of ksh 600,000 for HIV/AIDS intervention as directed by the Engineer	Months	6		
Total of Bill carried forward to summary					

SUMMARY OF BILL OF QUANTITIES FOR CONSTRUCTION OF GITARAKA BRIDGE IN MWEA WARD IN EMBU COUNTY

ITEM	DESCRIPTION	
1.0	General	
4.0	Site clearance	
5.0	Earthworks for Approach Roads	
7.0	Excavation and Filling for Structures	
9.0	Passage of Traffic	
10.0	Gravel Wearing Course	
17.0	Concrete Works	
20.0	Road Furniture	
21.0	Miscellaneous Bridge works	
25.0	HIV/AIDS	
	Sub - Total A	
	Add 16% of Sub-Total B for Value Added Tax	
	Grand Total	

SECTION VI - SPECIFICATIONS

STANDARD SPECIFICATIONS

STANDARD SPECIFICATIONS

Standard Specifications refers to the Standard Specifications for Road and Bridge Construction, 1986 Edition.

SECTION 11: SPECIAL SPECIFICATIONS

SPECIAL SPECIFICATIONS

SECTION VI - SPECIFICATIONS

STANDARD SPECIFICATIONS

STANDARD SPECIFICATIONS

Standard Specifications refers to the Standard Specifications for Road and Bridge Construction, 1986 Edition.

SECTION 11: SPECIAL SPECIFICATIONS

SPECIAL SPECIFICATIONS

TABLE OF CONTENTS

100 SPECIAL SPECIFICATIONS. 23
104 PROGRAMME OF EXECUTION OF THE WORKS 25
105 ORDER OF EXECUTION OF WORKS 25
107 TAKING OVER CERTIFICATE 25
109 NOTICE OF OPERATIONS 25
117 HEALTH, SAFETY AND ACCIDENTS 25
121 DIVERSION OF SERVICES 25
123 LIAISON WITH GOVERNMENT AND POLICE OFFICIALS 26
124 LAND FOR ALL CAMPS SITES AND FOR THE CONTRACTOR'S OWN PURPOSES, INCLUDING TEMPORARY WORKS. 26
128 STORAGE OF MATERIALS 26
129 TEST CERTIFICATES 26
131 SIGNBOARDS 26
134 ENGINEER'S LABORATORY 27
137 ATTENDANCE UPON THE ENGINEER AND HIS STAFF 27
138 VEHICLES AND DRIVERS FOR THE ENGINEER AND HIS STAFF AND METHOD OF PAYMENT 27
139 RECEIPTED ACCOUNTS 27
142 LIQUIDATED DAMAGES 27
143 ENVIRONMENTAL PROTECTION 27

SECTION 3 - SETTING OUT & TOLERANCES 28
301 SETTING OUT 28

The contractor while pegging out the distances shall ensure that the existing alignment is followed unless instructed otherwise by the Engineer 28

SECTION 4- SITE CLEARANCE AND TOP SOIL STRIPPING 28
402 REMOVAL OF TOPSOIL 28

403 REMOVAL OF STRUCTURES, FENCES AND OBSTRUCTIONS 28

SECTION 5 – EARTHWORKS 28
504 PREPARATION PRIOR TO FORMING EMBANKMENT 28
505 CONSTRUCTION OF EMBANKMENTS 29
508 COMPACTION OF EARTHWORKS 29
511 BORROW PITS 29
515 SIDE DRAINS 29
517 MEASUREMENT AND PAYMENT 29
517(e) Overhaul 30
518 Grading and shaping 30

SECTION 6 - QUARRIES, BORROW PITS, STOCKPILES & SPOIL AREAS 30
601 GENERAL 30

SECTION 7 - EXCAVATION AND FILLING FOR STRUCTURES 31
703 EXCAVATION OF FOUNDATIONS FOR STRUCTURES 31
707 BACKFILLING FOR STRUCTURES 31
709 EXCAVATION FOR RIVER TRAINING AND NEW WATER COURSES 31
710 STONE PITCHING 31
711 GABIONS 31
712 RIP-RAP PROTECTION WORK 32
714 BACKFILL BELOW STRUCTRURES 32

SECTION 8 - CULVERTS AND DRAINAGE WORKS 33
801 SCOPE OF SECTION 33
804 EXCAVATION FOR CULVERTS AND DRAINAGE WORKS 33
805 EXCAVATION IN HARD MATERIAL 33
809 BEDDING AND LAYING OF PIPE CULVERTS 33
810 JOINTING CONCRETE PIPES 34
812 BACKFILLING OVER PIPE CULVERTS 34
814 SUBSOIL DRAINS 34
817 REPAIRS TO DRAINS 34
(vi) Spoil Material 35
819 CLEANING AND MAINTENANCE 35

SECTION 9 - PASSAGE OF TRAFFIC 36
901 SCOPE OF THE SECTION 36
906 PASSAGE OF TRAFFIC THROUGH THE WORKS 36
907 SIGNS, BARRIERS AND LIGHTS 36
909 ASSISTANCE TO PUBLIC 36
912 MEASUREMENT AND PAYMENT 36

SECTION 10 - GRAVEL WEARING COURSE 37
1001 GENERAL 37

1003 MATERIAL REQUIREMENTS 37

SECTION 12 - NATURAL MATERIAL SUBBASE AND BASE 38
1201 GENERAL 38
1203 MATERIAL REQUIREMENTS 38
1209 MEASUREMENT AND PAYMENT 38
1210 HAND PACKED STONE 38
1211 REPROCESSING EXISTING PAVEMENT LAYERS 39

Payment will only be made for breaking up and excavating existing pavement layers to the specified depth if the material is to be removed to spoil 41

SECTION 14 - CEMENT AND LIME TREATED MATERIAL 42

1401 SCOPE OF SECTION 42

This section deals with the addition and mixing in of cement or lime, herein after described as the "stabilizer", to the upper layers of earthworks as described in section 5, natural materials as described in section 12, and crushed materials as described in section 13, of the Specification. 42

Following the addition and mixing in of the stabilizer the material is referred to as "treated material". Treated material may either be lime or cement improved material, or cement stabilized material.....42

This section also deals with the compaction and curing of the treated material. 42

Treated materials may be used in the upper earthworks layers, shoulder layers, subbase layer or base layer.....42

1402 SOURCES OF MATERIALS.....42

In accordance with Sections 5, 12, and 13 of this Specification. 42

1403 MATERIAL REQUIREMENTS.....42

(a) Natural materials 42

In accordance with Sections 5, 12, and 13 of this Specification. 42

(b) Cement and Lime.....42

(i) Cement 42

Unless otherwise specified cement shall be ordinary Portland cement complying with the requirements of section 2 of this specification. 42

(ii) Lime 42

Lime shall be hydrated calcium lime or quicklime and shall comply with the requirements of section 2 of this specification. 42

(iii) Storage and Handling.....42

The requirements of Section 17 of this specification shall apply to cement.All lime shall be kept under cover and protected from moisture. Consignments shall be used in the same sequence as they are delivered. Stocks which become damaged or which are stored on the Site for more than 3 months shall not be used, and shall be replaced at the contractor's expense. Operators and labour shall be provided with protective clothing, masks and goggles. 42

STANDARD SPECIFICATION FOR ROAD AND BRIDGE CONSTRUCTION CEMENT AND LIME TREATED MATERIAL Page 14.2.....42

1404 AMOUNT OF STABILIZER TO BE ADDED. 42

The amount of cement or lime to be added shall be determined by the Engineer following laboratory trials, and site trials carried out by the Contractor in accordance with Section 2 of this Specification. 42

1405 MIX-IN-PLACE METHOD OF CONSTRUCTION 42

The mix-in-place method may be used for the addition and mixing in of stabilizer. 42

(a) Mixing equipment 42

The equipment for pulverizing the material and mixing in the stabilizer shall be purpose - built equipment, capable of pulverizing the materials and mixing in the stabilizer to the full depth of the loose layer necessary to give the specified thickness of compacted material mixed and compacted in accordance with this section of this Specification. 42

The equipment may be either single or multipass machines and shall only be acceptable if, during the site

trials carried out in accordance with Section 2 of this Specification, it can produce material to the specified requirements. 42

If single-pass equipment is used for plastic soils, the degree of pulverization as determined in accordance with Test 17 of BS 1924 shall be not less than 80 percent. 42

The mixers shall be equipped with a device for controlling the depth of processing and mixing blades shall, be maintained or reset periodically so that the correct depth of mixing is obtained at all times. 43

Mixing by grader will not be permitted. 43

(b) Preparation of the layer 43

Before the stabilizer is applied, the material to be treated shall be spread and broken down and oversize material removed so that the maximum size of the particles is not more than specified. If multi-pass processing is employed, the material shal1 first be pulverised to the required tilt by successive passes. The material shall then be shaped true to line, grade and cross-section and, if required, lightly compacted. The loose thickness shall be such as to give the specified thickness after full compaction has been carried out. ...43

The moisture content of the layer before the addition of the stabilizer shall be adjusted to within the range of 70% to 85% of the Optimum Moisture Content (AASHTO T180). 43

(c) Spreading the stabilizer 43

After the layer to be treated has been prepared to the satisfaction of the Engineer, the stabilizer shall be uniformly spread ever the width to be worked at the specified rate. If a spreader is used to spread the stabilizer ahead of the STANDARD SPECIFICATION FOR ROAD AND BRIDGE CONSTRUCTION CEMENT AND LIME TREATED MATERIAL Page 14.3mixer, it shall be fitted with a device to ensure a uniform and controllable rate of spread both transversely and longitudinally. Only sufficient stabilizer for immediate use shall be spread ahead of the mixing operation and any which, in the opinion of the Engineer, becomes defective, shall be replaced at the Contractor expense. Only equipment actually used in the spreading or mixing operation shall be allowed to pass over the stabilizer, when so spread, before it has been mixed into the material to be treated. 43

(d) Mixing and watering....43

Immediately after the stabilizer has been spread, it shall be thoroughly and intimately mixed into the material, for the full depth of the layer. Mixing shall continue until the resulting mixture forms a fine and homogeneous tilt. The mixing machine shall be set so that it cuts at least 100mm into the edge of any adjoining lane processed previously so as to ensure that all the material forming the layer has been property processed. Care shall be taken both during this and during subsequent watering operations that the underlying layer is not disturbed and that no material from the underlying layer or shoulders is mixed with that being processed. If watering is necessary to bring the mixture to the required moisture content, then this shall be done after spreading and mixing in the stabilizer. Water shall be added in a uniform and controllable manner and, where necessary, in successive increments. Each increment shall be mixed in a separate mixing operation. Care shall be taken to avoid a concentration of water at any point or a flow of water over the surface. 43

Any part of the mixture which becomes too wet after the stabilizer has been added and before the mixture is compact will be rejected and any such part shall be allowed to dry out until its moisture content is satisfactory and shall be retreated with fresh stabilizer and finished off in accordance with this Clause. 43

Throughout the process of mixing in the stabilizer and water, a uniform thickness of the mixture shall be maintained and, if necessary, the mixture shall be graded to maintain the correct uncompacted thickness and shape. Any part of the mixture that becomes segregated shall be removed and replaced. 43

1406 STATIONARY PLANT METHOD OF CONSTRUCTION....43

(a) Mixing Equipment 43

Stationary mixing plant shall be of the power driven paddle or pan type and may be of the batch or continuous type. 43

STANDARD SPECIFICATION FOR ROAD AND BRIDGE CONSTRUCTION CEMENT AND LIME TREATED MATERIAL Page 14.4 43

If batch mixers are used, the appropriate measured amounts of material and stabilizer shall first be placed in the mixer, water being then added as necessary to bring the moisture content of the resulting mixture within the range determined in the laboratory and site trials. Special care shall be taken with batch type paddle mixers to ensure that the stabilizer is spread uniformly in the loading skip so that it is fed evenly along the mixing trough and that with both paddle and pan mixers the stabilizer is proportioned accurately by a separate weighing or proportioning device from that used for the material being stabilised. Mixing shall be continued until the mixture has the required uniformity and for not less than 1 minute unless a shorter minimum period is permitted by the Engineer after satisfactory trials. 43

If continuous mixing is used, the paddles, baffles and rate of feed of materials shall be adjusted to give uniformly mixed material. 44

If a spray is used for distributing water into the mixer, it shall be adjusted to give uniformity in moisture content throughout the mix. 44

(b) Transporting 44

Mixed material shall be transported to the road in suitable vehicles. Material that becomes segregated or is affected by weather shall be removed and replaced at the Contractor's expense. 44

(c) Laying 44

The mixed material shall be spread by means of a mechanical paver to the required width and such thickness that the tolerance requirements as specified in Section 3 of this Specification are obtained after final compaction. Segregation shall be avoided and the layer shall be free from pockets of coarse or fine material. 44

1407 COMPACTION AND FINISHING 44

For cement treated materials final compaction and finishing shall be completed within 2 hours after the cement comes into contact with the material to be treated. 44

For lime treated materials, final compaction and finishing shall be completed within 4 hours after the lime comes into contact with the material to be treated. 44

(a) Thickness limitations 44

The compacted thickness of any treated layer laid, processed and compacted at one time shall not exceed 180mm. Where a greater thickness is required, the material shall be laid in two or more layers. 44

The compacted thickness of any base layer shall not be less than 3 times the maximum particle size of the material and the compacted thickness of any subbase layer shall not be less than twice the maximum particle size of the material. 44

STANDARD SPECIFICATION FOR ROAD AND BRIDGE CONSTRUCTION CEMENT AND LIME TREATED MATERIAL Page 14.5 44

(b) Compaction requirements 44

The minimum density for all lime and cement treated materials shall be 95% MDD (AASHTO T180). The moisture content at the time of compaction shall be between 95% and 105% of Optimum Moisture Content (AASHTO Tl80). 44

(c) Finishing 44

The surface finish after compaction of any treated layer shall be free from ridges, compaction planes, laminations, loose and segregated material and other surface irregularities and shall be to line and level and within the tolerances specified in Section 3 of this Specification. If the surface fails to meet the requirements of this Specification the Contractor shall take the action set out in the appropriate part of Section 3 of this

Specification or such other action as the Engineer may instruct or agree. 44

1408 JOINTS BETWEEN NEW AND EXISTING WORK 44

The forming of construction joints and the protection of previously treated or other work shall be carried out so as to produce a uniformly compacted and homogeneous layer free from ridges or, other irregularities. 45

Full width working, without longitudinal joints, will generally be required. Half-width working may be instructed by the Engineer to pass traffic. When forming longitudinal joints, mix-in-place method at least 100mm of the first laid half-width layer shall be retreated and mixed in with the second half-width layer....45

When forming transverse joints, with the mix-in-place method, at least 1.0m length of the previously laid treated work shall be incorporated into the new treated layer and the Engineer may instruct that the percentage of stabilizer be increased at these places. 45

When forming longitudinal or transverse joints with the stationary plant method of construction, previous work shall be cut back to expose fully treated and compacted material. 45

1409 PROTECTION AND CURING....45

Treated layers shall be kept continuously damp by lightly spraying with water, from completion of compaction until one of the curing systems specified below is placed. 45

Treated layers shall be protected, within 4 hours of completion of compaction in the case of cement treated material and 8 hours in the case of lime treated material, by one of the following methods: - 45

(i) Completely covering the layer with clear or light coloured approved polythene sheeting of minimum thickness 0.1mm. The sheeting shall be laid to cover the whole of the surface of the layer. At joints the sheeting shall be lapped by at least 500mm and any damaged sheeting shall be replaced at the Contractor's expense. 45

STANDARD SPECIFICATION FOR ROAD AND BRIDGE CONSTRUCTION CEMENT AND LIME TREATED MATERIAL Page 14.6....45

The sheeting shall be securely held in contact with the layer by an approved method. 45

(ii) Completely covering the treated material with a layer of damp uncompacted gravel or soil material of minimum thickness 100mm. This material, which may be that forming the next layer, shall be kept continuously damp. 45

(iii) Spraying the layer with A3 anionic emulsion at a rate of 1.51/m2 to be applied in accordance with Parts A and B of Section 15 of this Specification. This method shall not be permitted where the following layer is to be a bituminous mix in accordance with Section 16 of this Specification. 45

Unless otherwise instructed by the Engineer, no prime will be required where method (iii) is adopted and the contractor shall comply with the requirements of Parts A and B of Section 15 of this Specification. 45

Plant used for dumping and spreading material, and the application of water or emulsion shall be approved by the Engineer and shall have individual axle loads not exceeding 6 tonnes. 45

Immediately prior to placing protection methods (i) or (iii) the surface of the treated layer shall be made thoroughly damp by lightly spraying with water. 45

The curing system shall be kept in place and intact for a minimum of 7 days after completion of compaction although small areas may be temporarily removed for the purposes of carrying out control testing but only for the minimum amount of time required for the testing. 45

1410 TRAFFIC 45

Traffic or equipment, other than that actually engaged in the various treatment or protection processes, shall not run over the layer being processed or compacted. 45

On completion of curing no traffic or equipment shall be allowed on the treated layer with the exception of that required for proofrolling, priming or construction of the subsequent layer. 45

1411 TOLERANCES 45

(a) Geometric tolerances 45

The treated upper earthworks, sub-base and base shall be constructed within the tolerances specified in Section 3 of this Specification. 46

(b) Amount of stabilizer 46

(i) Mix-in-place method of construction. 46

STANDARD SPECIFICATION FOR ROAD AND BRIDGE CONSTRUCTION CEMENT AND LIME TREATED MATERIAL Page 14.7 46

The average amount of stabilizer, measured before mixing, over a length of 100 m, shall not be less than the amount ordered. 46

The average amount of stabilizer in the treated material, measured at five points over a length of 100 m, shall not be less than the amount ordered. 46

The amount of stabilizer, measured after mixing, shall at no point be less than 70% or more than 130% of the amount ordered. 46

(ii) Stationary plant method of construction 46

The average amount of stabilizer in the treated material measured at five points over a length of 100m shall not be less than the amount ordered. 46

The amount of stabilizer measured after mixing shall, at no point be less than 90% or more than 110% of the amount ordered. 46

(iii) Determination of stabilizer content 46

The cement content in mixed materials shall be determined according to Test 14 of BS 1924 or to AASHTO T211-65 (1982). 46

The lime content in mixed materials shall be determined according to Test 15 of BS 1924. 46

1412 MEASUREMENT AND PAYMENT 46

For the purpose of measurement and payment no distinction shall be made between the mix-in-place and stationary plant methods of construction. 46

The work of providing, placing, spreading mixing, watering shaping and hauling the materials to be stabilised will be measured and paid for in Sections 5, 11, 12 and 13, as appropriate, of this Specification. 46

For the additional work of providing and mixing-in the stabilizer and curing the treated materials the Contractor will be paid as follows:- 46

(a) Item: Stabilizer 46

Unit: Tonne of each type of stabilizer 46

The provision of the stabilizer shall be measured by the tonne calculated as the specified weight of stabilizer added to the material. 46

The rate for stabilizer shall include for the cost of provision, storage, handling, transport and spreading of the stabilizer at any point on the Works and complying with the requirements of Clauses 1401, 1403, 1404, 1405, 1406, 1408 and 1411 of this Specification. 46

(b) Item: Mix-in stabilizer **46**

Unit: m3 ..... **46**

STANDARD SPECIFICATION FOR ROAD AND BRIDGE CONSTRUCTION CEMENT AND LIME TREATED MATERIAL Page 14.8 ..... **46**

Mixing stabilizer into the material shall be measured by the cubic metre of treated material calculated as the product of the compacted sectional area specified to be treated and the length instructed. **46**

The rate for mixing shall include for the cost of complying with the requirements of Section 14 of this Specification. **46**

(c) Item: Curing treated material **46**

Unit: m2 ..... **46**

Curing treated material shall be measured by the square metre of the layer cured calculated as the product of the specified width of treated layer and the length cured. **47**

The rate for curing shall include for the cost of watering, provision placing and maintenance of the curing system, and for complying with the requirements of Clause 1409 and Parts A and B of Section 15 of this Specification. **47**

SECTION 15 - BITUMINOUS SURFACE TREATMENTS 47
1501B PREPARATION OF SURFACE 47
PART B - PRIME COAT 47
1502B MATERIALS FOR PRIME COAT AND TACK COAT. 47
1511C MEASUREMENT AND PAYMENT 48

SECTION 16 - BITUMINOUS MIX BASES, BINDER COURSES AND WEARING COURSES **49**

PART A – GENERAL 49
1601A SCOPE OF PART A 49
1602A REQUIREMENTS FROM OTHER SECTIONS 49
1603A CONSTRUCTION PLANT 49
1604A PREPARATION OF SURFACE 50
1605A DESIGN AND WORKING MIXES 50
1606A SITE TRIALS 51
1607A MIXING OF AGGREGATES AND BITUMEN 52
1608A TRANSPORTING THE MIXTURE 52
1609A LAYING THE MIXTURE 52
1610A COMPACTION 53
1611A FINISHING, JOINTS AND EDGES 53
1612A SAMPLING AND TESTING OF BITUMINOUS MIXTURES 54
1613A QUALITY CONTROL TESTING 54
1614A TOLERANCES 54
1615A MEASUREMENT AND PAYMENT 55
PART B - ASPHALT CONCRETE FOR SURFACING 56
1601B DEFINITION 56
1602B MATERIALS FOR ASPHALT CONCRETE TYPE 1 56
1603B GRADING REQUIREMENTS 57
1604B REQUIREMENTS FOR ASPHALT CONCRETE TYPE 1 57
1605B MIXING AND LAYING HEAVY DUTY ASPHALT 58
1606B COMPACTION 58
1607B MEASUREMENT AND PAYMENT 58

SECTION 17 - CONCRETE WORKS **60**

1703 MATERIALS FOR CONCRETE 60
(a) Materials 60
1703(A) LEVELLING CONCRETE (CLASS 15/20) FOR BOTTOM SLAB INCLUSIVE OF COST OF FORM WORKS 60
1703(B) REINFORCING BARS OF WALLS AND SLABS 61

1703 (C) FORMWORK FOR CULVERT WALLS AND SLABS.....63

SECTION 20 - ROAD FURNITURE 67
2004 PERMANENT ROAD SIGNS 67
2004B EXISTING ROAD SIGNS.....67
2006 GUARDRAILS AND HANDRAILS 67

SECTION 1 - GENERAL

100 SPECIAL SPECIFICATIONS.

Special specification is supplementary to the Standard Specifications and the two must be read in conjunction. In any case where there appears to be conflict between the two then the Special Specifications will take precedence
In the absence of any definite provisions on any particular issue in the aforesaid Specifications, reference may be made to the latest codes and specifications of Design Manual for Roads and Bridges of the Ministry of Transport and communication of the Republic of Kenya, Kenya Bureau of Standards (KEBS), BS, ASTM, AASHTO and in that order. Where even these are silent, the construction and completion of the works shall conform to sound engineering practice as approved by the Engineer and in case of any dispute arising out of the interpretation of the above, the decision of the Engineer shall be final and binding on the Contractor.

101 This road is located in Embu County, Mbeere North Sub county.
The main economic activates around the area road includes Sorghum, Millet and daily farming.

102 EXTENT OF CONTRACT

The works are new construction to bitumen standard of the section of the Road identified above. Other associated works are construction of storm-water drainage systems comprising lined roadside drains, culverts and storm-water drainage outfall.

102.1 PROJECT COMPONENTS

The proposed construction works to be executed under the Contract shall mainly comprise but are not limited to the following schemes:

- 6.0 m wide carriageway with 1.0 m wide shoulders either side of the carriageway (and footpaths where instructed)
- Junctions and access roads as required
- Road drains under on the outer side of the shoulders
- Road furniture and markings
- Bus bays
- Utility relocation
- Safety provisions and protection works
- Landscaping
- Protection works

102.2 SCOPE OF WORK

The scope of the work shall include the following:

Here are the main steps for cast-in-place box culvert construction, from site clearance to completion:

1. Site Clearance: Clear vegetation, debris, and topsoil from the culvert footprint and working area.

2. Water Diversion & Dewatering: Divert existing stream flow using cofferdams or bypass channels, and pump out groundwater to keep the work area dry.

3. Setting Out: Mark the culvert centerline, alignment, and invert levels using survey instruments and reference pegs.

4. Excavation: Excavate the foundation trench to the required depth, width, and slope, ensuring trench sides are safely sloped or shored.

5. Subgrade Preparation: Compact the trench bottom and replace any soft or unsuitable soil with approved granular fill.

6. Bedding / Blinding Concrete: Place and compact a granular bedding layer, followed by a thin layer of lean concrete (PCC blinding) to provide a clean, level working surface.

7. Bottom Slab Reinforcement & Formwork: Fix steel reinforcement bars for the base slab (including starter bars for the walls) and install edge formwork.

8. Bottom Slab Concreting: Pour, vibrate, and level the base slab concrete, then cure it properly.

9. Wall & Top Slab Reinforcement: Erect and tie steel reinforcement cages for the side walls (and internal dividing walls, if multi-cell) and the top slab.

10. Wall & Top Slab Formwork: Install inner and outer wall shuttering, top slab soffit forms, and heavy-duty props/shoring to support the wet concrete.

11. Wall & Top Slab Concreting: Pour and vibrate concrete for the walls and top slab, ensuring construction joints are clean and properly treated.

12. Curing & Formwork Removal: Keep concrete moist for the specified curing period and strip formwork once the concrete reaches adequate strength.

13. Waterproofing & Joint Sealing: Apply waterproofing membranes or coatings to exterior surfaces and seal construction or expansion joints.

14. Headwalls, Wingwalls & Aprons: Construct inlet and outlet headwalls, wingwalls, and scour aprons to direct water flow and prevent erosion.

15. Backfilling & Compaction: Backfill evenly in thin, compacted layers on both sides of the culvert simultaneously to avoid unbalanced lateral pressure.

16. Final Grading & Roadway Reinstatement: Restore the channel bed, place riprap erosion protection if required, and construct the road embankment or pavement over the culvert.

17. Other Ancillary Works

i. Landscaping and planting of selected trees, flowering bushes and grass on slopes of embankments and cuttings

iv. Protection works using stone pitching and gabions as necessary

18. Any other activity not listed above but deemed necessary and instructed by the Engineer to be paid within the mode of payment stipulated either by day works or on measured basis

19. Maintenance of the works during the construction period. The defects liability period shall be 6 months.

104 PROGRAMME OF EXECUTION OF THE WORKS

The contractor shall provide the works programme, required under clause 14 of the Conditions of Contract, within 21 days of receipt of the Engineer's Order to commence work.

The programme shall be co-ordinated with climatic and other conditions to provide for the completion of the works in the order and by the time specified.

The Contractor shall carry out the contract in accordance with the programme agreed with the Engineer, but he shall in no manner be relieved by the Engineer's approval of the programme, of his obligation to complete the works in the prescribed order and by the prescribed completion date and he shall from time to time review his progress and make such amendments to his rate of execution of the works as may be necessary to fulfill his obligations.

105 ORDER OF EXECUTION OF WORKS

In addition to Clause 105 of the Standard Specification the Contractor shall carry out the Works such that a continuous and consecutive output of fully completed work is achieved.

107 TAKING OVER CERTIFICATE

The minimum length of road for which a certificate will be issued under Clause 48 of the Conditions of Contract is the entire length of the road when substantially completed.

109 NOTICE OF OPERATIONS

Add the following sub- Clause.

109.1 Notification Terms
It shall be the Contractor's responsibility to notify the Engineer when any item of works scheduled are completed and ready for approval, and the contractor shall give sufficient notice to allow control test to be performed.

109.2 Explosive and Blasting

(a) The requirements of the Laws of Kenya governing explosives and other requirements and regulations of Government of Kenya and other authorities shall be complied with.
(b) No explosives of any kind shall be used without prior written consent of the Engineer.
(c) The Contractor shall be solely responsible for the provision, handling, storage and transporting of all explosive ancillary materials and all other items of related kind whatsoever required for blasting.

117 HEALTH, SAFETY AND ACCIDENTS

Add to section 117 the following:

In addition to providing, equipping and maintaining adequate first aid stations throughout the works in accordance with the laws of Kenya, the contractor shall provide and maintain on site during the duration of the Contract, a fully equipped dispensary. This shall be with a qualified Clinical Officer / Nurse who shall offer the necessary medical advice on HIV and related diseases to the Engineer's and Contractor's Site staff. The Contractor shall allow for this in the rates and be responsible for all site welfare arrangements at his own cost.

121 DIVERSION OF SERVICES

(a) The Contractor shall acquaint himself with the location of all existing services such as telephone lines, electricity cables, water pipes, sewers etc., before execution of any works

that may affect the services. The cost of determining the location of the existing services together with making good or repairing of any damage caused all to the satisfaction of the Engineer shall be included in the tender rates.

(b) Subject to the agreement with the Engineer, the Contractor shall be responsible for removal of alteration and relocation of existing services.

(c) The Contractor shall indemnify the Employer against claims originating from damage to existing services or works.

123 LIAISON WITH GOVERNMENT AND POLICE OFFICIALS

The Contractor shall keep in close touch with the Police and the other Government officials of the area regarding their requirements in the control of traffic or other matters, and shall provide all assistance or facilities, which may be required by such officials in the execution of their duties.

124 LAND FOR ALL CAMPS SITES AND FOR THE CONTRACTOR'S OWN PURPOSES, INCLUDING TEMPORARY WORKS.

Notwithstanding Clause 124 of the Standard Specification all requirements of land for temporary works and construction purposes shall be to the approval of the Engineer but the Contractor will make all necessary arrangements with the property owners concerned and pay all charges arising there .from. On or before completion of the Contract, the Contractor shall remove all temporary works and shall restore all such land to the condition in which it was immediately prior to the occupation thereof as far as reasonable and practicable. No separate payment will be made to the Contractor on account of these items and the Contractor must make due allowance for them in his rates.

Notwithstanding Clause 120 of the Standard Specifications, the Contractor shall be required to appoint a competent surveyor who will liaise with the Engineer on matters related to the demarcation of the existing road reserve, site measurements, removal and reinstatement of existing services.

128 STORAGE OF MATERIALS

All materials shall be stored on Site in a manner approved by the Engineer and the Contractor shall carefully protect from the weather all work and materials which may be affected thereby.

129 TEST CERTIFICATES

When instructed by the Engineer, the Contractor shall submit certificates of test from the suppliers of materials and goods required in connection with the works as the Engineer may require.

Such certificates shall certify that the materials or goods concerned have been tested in accordance with the requirements of the specifications and shall give the results of all the tests carried out. The Contractor shall provide adequate means of identifying the materials and goods delivered to the site with the corresponding certificates.

131 SIGNBOARDS

The Contractor shall provide and erect 1 (one) or two (2) publicity signboards on the site as directed. The Engineer shall, as shown in the Drawings and as required, direct the minimum dimensions of the boards. The boards shall be prepared, primed and painted cream and lettered in black. The boards shall be of stout construction, resistant to the effects of weather.

132 HOUSING ACCOMMODATION FOR THE ENGINEER AND HIS STAFF, OFFICES AND LABORATORIES FOR THE ENGINEER WITH LABORATORY AND SURVEY EQUIPMENT AND FURNITURE

The contractor shall if required by the Special Specification, provide and maintain houses, offices,

laboratories, survey and laboratory equipment, and furniture for the Engineer and his staff, including senior staff, junior staff, and technicians.

A description of the number and type of houses, offices, laboratories, equipment and furniture required

is given in the Special Specification.

132.1 LIST OF FURNITURE FOR ENGINEER'S OFFICE

The Engineer's office shall be provided with new furniture, equipment, and fittings to the approval of the

Engineer as listed below, respectively: All the furniture mentioned above shall revert to the Employer after the completion of the contract. Payments shall be made under the relevant provisions in the Bills of Quantities.

134 ENGINEER'S LABORATORY

The Contractor shall pay for all materials testing and Staff Allowances.
Payments shall be made under the relevant item of the BOQ on provision of receipt.

137 ATTENDANCE UPON THE ENGINEER AND HIS STAFF

The Contractor shall provide, pay (including all overtime) attendant staff to fulfil the requirements of Clause 137 of the Standard Specification. The number of staff required for these duties shall be not exceed 6No. The Contractor will be paid on a prime cost basis plus a percentage for overheads and profits under relevant item of the Bills of Quantities.

138 VEHICLES AND DRIVERS FOR THE ENGINEER AND HIS STAFF AND METHOD OF PAYMENT

The Contractor shall when instructed to do so shall Pay the Service Provider the amount of the invoice for the Supervision Vehicle during the period of the contract.

Payment for the vehicle shall be by a rate entered in the Preliminary and General Item of the BOQ.

139 RECEIPTED ACCOUNTS

The Engineer may instruct the Contractor to make payments of general miscellaneous accounts for such items as stationery, stores and equipment and miscellaneous supervision personnel and claims or the Engineer may direct the Contractor to purchase or pay for the above. The Contractor will be paid on a prime cost basis plus a percentage for overheads and profits under relevant items of the BOQ.

The Contractor, when instructed, shall provide and install at the Engineer's office the Equipment specified below with a dealer's certificate and warranty:

140 ACCOMMODATION FOR THE ENGINEER'S STAFF

Not Applicable

142 LIQUIDATED DAMAGES

Liquidated Damages at the rate shown in the Appendix to Form of Bid shall apply in the event of the works not being completed within the time for completion plus any extension of time which may be determined by the Engineer.

143 ENVIRONMENTAL PROTECTION

The Contractor shall ensure so far as is reasonably practicable and to the satisfaction of the Engineer; that the impact of the construction on the environment shall be kept to a minimum and that appropriate measures are taken to mitigate any adverse effects during the

construction.

(a) After extraction of materials, all borrows pits shall be back-filled to the satisfaction of the Engineer. In particular borrow pits near the project road shall be back-filled in such a way that no water collects in them.

(b) Spilling of bitumen, fuels, Oils and other pollutants shall be cleared up.

SECTION 2 - MATERIALS AND TESTING OF MATERIALS

All materials testing shall be in accordance with Section 2 of the Standard Specifications.

SECTION 3 - SETTING OUT & TOLERANCES

301 SETTING OUT

The contractor while pegging out the distances shall ensure that the existing alignment is followed unless instructed otherwise by the Engineer.

SECTION 4- SITE CLEARANCE AND TOP SOIL STRIPPING

401 SITE CLEARANCE

Site Clearance shall be carried out as directed by the Engineer.

402 REMOVAL OF TOPSOIL

Topsoil shall include up to 200mm depth or any unsuitable material encountered in existing or newly constructed drains, drainage channels, and accesses.

403 REMOVAL OF STRUCTURES, FENCES AND OBSTRUCTIONS

When instructed by the Engineer, the Contractor shall demolish or remove structure and payment for this shall be made as per the bill item.

SECTION 5 – EARTHWORKS

504 PREPARATION PRIOR TO FORMING EMBANKMENT

Where benching is required for existing pavement to accommodate earthworks sub-grade or sub-base for widening the road, the rate for compaction of existing ground shall be deemed to cover this activity.

(a)

Excavation in the pavement of the existing road shall be kept dry. In the event of water penetrating the underlying layer, construction of the subsequent layers shall be postponed until the underlying layers are dry enough to accommodate the construction plant without deforming or otherwise showing distress.

Step construction shall be carried out per layer at the joint where excavating both vertically and perpendicular to the direction of the travel. The step shall be 500mm perpendicular to the direction of the travel and 150mm vertical unless otherwise instructed by the Engineer.

Special care shall be taken when compacting the new material at the joint ensuring that specified density is achieved.

505 CONSTRUCTION OF EMBANKMENTS

Only material approved by the Engineer shall be used for fill in embankments.
Material with high swelling characteristics or high organic matter content and any other undesirable material shall not be used, unless specifically directed by the Engineer.
Unsuitable material shall include:

(i) All material containing more than 5% by weight or organic matter (such as topsoil, material from swamps, mud, logs, stumps and other perishable material)
(ii) All material with a swell of more than 3% (such as black cotton soil)
(iii) All clay of plasticity index exceeding 50.
(iv) All material having moisture content greater than 105% of optimum moisture content (Standard Compaction)

Subgrade: Shall mean upper 300mm of earthworks either insitu or in fill and subgrade shall be provided for as part of earthworks operation and payment shall be made as "fill". The material for subgrade shall have a CBR of not less than 8% measured after a 4 day soak in a laboratory mix compacted to a dry density of 100% MDD (AASHTO T99) and a swell of less than 1%.

Embankment repair: Where directed by the Engineer, any localised filling in soft, hard or natural; selected material requirements shall be executed in accordance with Clause 505.

508 COMPACTION OF EARTHWORKS

At pipe culverts, all fill above ground level around the culverts shall be compacted to density of 100% MDD (AASHTO T.99) up to the level of the top of the pipes or top of the surround(s), if any and for a width equal to the internal diameter of the pipe on either side of the pipe(s) or surround(s) as applicable.

At locations adjacent to structures, all fill above ground level upto the underside of the sub-grade shall be compacted to density of 105% MDD (AASHTO T.99). In case of fill around box culverts this should be carried out for the full width of the fill and for a length bounded by the vertical plane passing through the ends of the wingwalls.

Notwithstanding the provision of clause 503 of the standard Specification, Compaction of subgrade material (i.e. material immediately below formation) in cut areas shall not be carried out by the contractor in areas where the formation is formed in hard material, unless specific instructions to the contrary are issued by the Engineer.

Where improved sub-grade material shall be required, this shall be compacted and finished to the same standards and tolerances as those required for normal sub-grade and clauses in the specifications applying to normal sub-grade shall also apply.

511 BORROW PITS

The first part of the Standard Specification is amended as follows:-

Fill material which is required in addition to that provided by excavation shall be obtained from borrow pits to be located and provided by the Contractor but to the approval of the Engineer contrary to what has been stated.

515 SIDE DRAINS

Side drains shall be constructed in accordance with clause 515 of the Standard Specification. This item shall be paid under item no. 5.04.

517 MEASUREMENT AND PAYMENT

Notwithstanding the provisions of clause 517 of the standard specifications, the rate for compaction of fill in soft material shall allow for the requirements of clause 508 of the special specification and no extra payment shall be made for compaction around pipe culverts (100% MDD AASHTO T.99).

517(e) Overhaul

A freehaul of 1.5 km shall be allowed.

518 Grading and shaping

Where directed by the Engineer, the Contractor shall carry out grading and shaping over the full width of the carriageway and side slopes, so that the final profile complies with a standard cross- section shown in the drawings. The grading involves scarification up to a maximum depth of 150 mm, reworking of material to render it uniform and not segregated, reshaping, grading to profile, removing of material from side drains to spoil as directed by the Engineer, watering and compacting to 95 % MDD AASHTO T180, to required carriageway surface tolerance and uniform cross-fall all as directed by the Engineer.

The whole width of the finished surface, after the grading shall be trimmed and cleared off as necessary to leave the surface and slopes smooth, even and free from fresh loose heaps or windrows, stones or boulders or rocks, vegetation or any other deleterious material.

Measurement and Payment
Payment shall be made for the plan area instructed and approved by the Engineer
Item: Grading
Unit: Square metres

SECTION 6 - QUARRIES, BORROW PITS, STOCKPILES & SPOIL AREAS

601 GENERAL

Notwithstanding any indications to the contrary in the Standard specification the Engineer will not make available to the Contractor any land for quarries, borrow pits, stockpiles and spoil areas, except for those areas in road reserves specifically approved by him.

The contractor will be entirely responsible for locating suitable sources of materials complying with the Standard and Special Specifications, and for the procurement, Wining, haulage to site of these materials and all costs involved therein. Similarly the contractor will be responsible for the provision and costs involved in providing suitable areas for stockpiling materials and spoil dumps. Should there be suitable sites for spoil dumps or stockpiles within the road reserve forming the site of the works the Contractor may utilise these subject to the approval of the Engineer.

No additional payment will be made to the Contractor to cover costs arising from the requirements for this Clause and the Contractor must include these costs in the rates inserted into the Bills of Quantities.

SECTION 7 - EXCAVATION AND FILLING FOR STRUCTURES

The Preliminary Materials Report included as Vol. II of the tender documents is only for guidance of the Tenderers and that the information therein is neither warranted nor guaranteed.

703 EXCAVATION OF FOUNDATIONS FOR STRUCTURES

Unless otherwise instructed by the Engineer, all excavated surfaces in material other than hard material, on which foundations for structures shall be placed, shall be compacted to 100% MDD (AASHTO T.99) immediately before structures are constructed.

Paragraph 4, last line: - Replace "95%" with "100%".

707 BACKFILLING FOR STRUCTURES

Unless otherwise instructed by the Engineer, all backfilling material shall be compacted to a minimum of 100% MDD (AASHTO T.99).

709 EXCAVATION FOR RIVER TRAINING AND NEW WATER COURSES

Payments for river training and establishment of new watercourses shall only be made where such work constitute permanent works. Works done for road deviation or other temporary works shall not qualify for payment.

710 STONE PITCHING

Stone pitching to drains, inlets and outlets of culverts to embankments and around structures shall consist of sound unweathered rock approved by the Engineer.

The stone as dressed shall be roughly cubical in shape with minimum dimensions of 150 x 150mm for normal thickness of stone pitching. The Engineer may instruct use of river stones and paid for as per the bill rate.

The surface to receive the pitching shall be compacted and trimmed to slope and the stone laid, interlocked and rammed into the material to give an even finished surface.

In areas where stone pitching has been damaged, the Contractor shall identify such areas and notify the Engineer for his agreement of the extent of the Works required and his approval and instructions to proceed with the Works. Stone Pitching Repair and Reconstruction shall be carried out in accordance with Clause 710 of the Standard Specifications.

The Works shall involve removal of the damaged stone pitching and reconstruction of the said areas in accordance with Clause 710 of the Standard Specifications by use of the sound salvaged material together with any necessary additional material where all such materials shall comply with Section 7 of the Standard Specifications.

711 GABIONS

Where instructed by the Engineer the Contractor will install gabions as protection works to washout areas or bridge Piers and or Abutments. Gabions shall be constructed in accordance with Clause 711 of the Standard Specification.

I n cases where existing gabions have been damaged, the Contractor shall identify them and notify the Engineer for his agreement of the extent of the Work required and his approval and instructions to proceed with the Works.

The Works shall involve removal of the damaged gabions / rocks, excavation to the correct levels and grades as directed by the Engineer, and in accordance with Clause 711 of the Standard Specifications and reconstruction with new gabions and other necessary materials as

necessary. The damaged gabions shall be recovered and transported to the nearest County Yard or Embu, Majimbo Offices.

712 RIP-RAP PROTECTION WORK

Quarry waste or similar approved material shall be used to backfill scoured and eroded side, outfall and cutoff drains. The material shall be compacted to form a flat or curved surface preparatory to stone [pitching of drainage channels, existing and new scour checks as directed by the Engineer.

The surface to receive the pitching shall be compacted and trimmed to slope and the stone hand laid, interlocked and rammed into the material to give an even finished surface. The interstices of the Pitching shall be rammed with insitu material. The insitu material immediately behind the pitching shall be compacted to minimum density of 100% MDD compaction (AASHTO T.99)

714 BACKFILL BELOW STRUCTRURES

Where instructed this shall be carried out in compliance with the requirements of Clause 507 and 804 of the Standard Specification.

SECTION 8 - CULVERTS AND DRAINAGE WORKS

801 SCOPE OF SECTION

The operations specified in this section apply to the installation of drainage works and reinstatement and improvement of the same.

In addition, this Section covers:-

Replacement of existing 450mm pipe culverts by 600mm diameter or 900mm
Extending of existing 600mm and 900mm diameter pipes to be compatible with the increased road width.
Desilting and cleaning of existing pipes and outfall drains to make them free flowing.

804 EXCAVATION FOR CULVERTS AND DRAINAGE WORKS

In the Standard Specifications, make the following amendments: -

(a) Removal of Existing Pipe Culverts

Where instructed by the Engineer, the Contractor shall excavate and remove all existing blocked or collapsed culvert pipes of 450mm, 600mm and 900mm diameter including concrete surround, bedding, inlet and outlet structure.

The void left after removal of culvert pipes shall be widened as necessary to accommodate new concrete bedding, pipe and haunching.

The payment of this work shall be per linear metre of pipes removed, and the volume in m^3 of inlet/outlet structure removed. The void left by removal of these pipes shall be carefully preserved in order to accommodate replacement 600mm or 900mm diameter pipe culverts as shall be directed by the Engineer.

(b) Removal of Other Existing Drainage Structures

When instructed by the Engineer, the Contractor shall demolish or remove any other structure and payment for this shall be made on day work basis.

(c) Excavation for Culverts and Drainage Works

The Contractor shall carry out all excavations for new culverts and drainage works to the lines, levels, inclinations, and dimensions shown on the drawings or as instructed by the Engineer.

805 EXCAVATION IN HARD MATERIAL

In the Standard Specifications, Sub-clauses 805(a) and 805 (b) delete “95%” and insert “100%”.

In sub-clause 809(a), paragraph 1, line 1, substitute “95%” with “100%”.

In sub-clause 809©, paragraph 2, line 4, between the words “compacted” and “and shaped” insert the words “to 100% MDD (AASHTO T.99)”.

Hard material is a material, which can be excavated only after blasting with explosives or barring, and wedging or the use of a mechanical breaker fitted with a rock point in good condition and operated correctly. Boulders of more than $0.2m^3$ occurring in soft material shall be classified as hard material.

809 BEDDING AND LAYING OF PIPE CULVERTS

Concrete pipes shall be laid on a 150mm thick concrete bed of class 15/20 and the pipes shall be bedded on 1:3 cement: sand mortar at least 50mm thick, 150mm wide and extending the full length of

the barrel.

The rates inserted shall allow for compaction of the bottom of excavation to 95% MDD (AASHTO T.99).

810 JOINTING CONCRETE PIPES

The concrete pipes for the culverts shall have ogee joints and will be jointed by 1:2 cement: sand mortar and provided with fillets on the outside as described in clause 810 of the Standard Specification.

812 BACKFILLING OVER PIPE CULVERTS

In the Standard Specifications, clause 812

a) Delete paragraph 6 “for pipe culverts ..... depth of 150mm”, entirely.

The rates entered for laying of pipe culverts shall allow for backfilling to pipe culverts and compacting to 95% MDD (AASHTO T.99) and these works shall **not** be measured and paid for separately.

814 SUBSOIL DRAINS

In the event of excavation for repairs exposing local seepage, springs or unacceptably high water table, the Engineer may instruct the provision of counter fort or French drains.

These drains shall consist of a trench excavated to the alignment, width, depth and gradient instructed by the Engineer, and backfilled with approved compacted clean hard crushed rock material as specified in clause 815 of the standard specification. Where these drains lie within the carriageway the carriageway shall be reinstated with compacted graded crushed stone or stabilised gravel and surfaced with hot asphalt or a surface dressing as instructed by the Engineer.

817 REPAIRS TO DRAINS

(i) Cleaning Existing Drains

In areas of existing side drains, mitre or outfall drains where such are blocked, the Engineer shall instruct the Contractor to clean and clear the drains to free flowing condition.
The work shall consist of:

(a) Stripping and removal of any extraneous material to spoil including vegetation and roots in the drains to the satisfaction of the engineer.
(b) Spreading of any spoil to the satisfaction of the Engineer.
(c) Shaping the drains to free flowing condition as directed by the Engineer.

Measurement and Payment for cleaning drains shall be by linear metre of drain cleaned measured as the product of plan area and vertical depth of extraneous material instructed to be removed. No extra payment will be made for removal of vegetation and roots.

(ii) Channels

The Engineer may instruct that the Contractor provides open channels in place of existing subdrains where the latter may be damaged or in any other place. The rates entered by the Contractor in the bills of quantities must include for removal and disposal of any subdrain material, excavation to line and level, backfilling and compaction as directed by the engineer. The channels shall be constructed of precast class 20/20 concrete of minimum 80mm thickness and lengths or widths not exceeding 1000mm. Joints shall be at least 15mm wide filled with 1:2 cement sand mortar.

(iii) Rubble fills for protection work

Quarry waste or similar approved material shall be used to back fill scoured and eroded side, outfall and cutoff drains. The material shall be compacted to form a flat or curved surface preparatory to stone pitching of drainage channels, existing and new scour checks as directed by the Engineer.

(iv) Stone Pitching

Stone pitching shall be constructed in accordance with clause 710 of the standard Specification.

(v) Gabions

Gabions shall be constructed in accordance with clause 711 of the standard Specification.

(vi) Spoil Material

The Contractor shall be responsible for removal from site of all materials excavated in the course of undertaking works in this section of the specifications, unless suitable for re-use, and deposit of the material in a spoil dump to be approved by the Engineer.

818 Concrete scour checks

Concrete for scour checks shall be class 15/20.reinforcement shall be wire mesh A193 at the middle of the base of the wall, or as shown in the drawings or instructed by the Engineer.
Item: Concrete scour checks
Unit: M^3

Concrete scour checks shall be measured in cubic metres of concrete placed calculated from the dimensions of the scour check shown on the drawings or as directed by the Engineer.

The rate for concrete scour checks shall include the cost of excavating, removing excavated material to spoil, providing and placing class 15/20 concrete, A193 reinforcement and shuttering, all complying with the requirement of he specifications.

(b) Earthfill scour checks
Earthfill scour checks shall be constructed using selected earthfill material, in accordance with section 5 of the specification, or as shown in the drawings or as instructed by the Engineer.
Item: Earthfill scour checks
Unit: M^3

Earthfill scour checks shall be measured by cubic metres of earthfill calculated from the dimensions of the scour check shown on the drawings or as directed by the Engineer.

The rate for earthfill scour checks shall include for the cost of excavating, removing excavated material to spoil, providing, placing and compacting of the earthfill to at least 95% MDD (Standard Compaction) and trimming the slopes. An extra pitching the surfaces as per Clause 710 of the special specifications.

819 CLEANING AND MAINTENANCE

1.

2. (i) Desilting of Pipe Culverts

-

- Where instructed Contractor shall desilt the existing pipe culverts by removing all the material from the pipe to make them clean and free flowing.

- Measurement and payment shall be by the linear metres of pipes de-silted, regardless of diameter size.

SECTION 9 - PASSAGE OF TRAFFIC

901 SCOPE OF THE SECTION

The Contractor shall so arrange his work to ensure the safe passage of the Traffic at all times and if necessary construct and maintain an adequate diversion for traffic complete with all the necessary road traffic signs.

The contractor shall provide to the satisfaction of the Engineer adequate warning signs, temporary restriction signs, advance warning signs, barriers, temporary bumps and any other device and personnel equipped with two way radios to ensure the safe passage of traffic through the works.

When carrying out the Works the Contractor shall have full regard for the safety of all road users.

The Contractor shall also provide sign posts and maintain to the satisfaction of the Engineer all deviations necessary to complete the works. The contractor should allow for the costs of complying with the requirements of this clause in his rates.

The contractor will be deemed to have inspected the site and satisfied himself as to the adequacy of his bid for these works and no additional payments will be made to the contractor for any expenditure on traffic control or the provision of deviations. The employer shall not be liable for inadequate prior investigations of this nature by the contractor.

906 PASSAGE OF TRAFFIC THROUGH THE WORKS

The Contractor shall arrange for passage of traffic through the works during construction and the cost of doing so shall be payable under Item 9.01. To this end, the contractor shall be deemed to have inspected the site Any damage caused by passing traffic through the works shall be made good at the contractor's own cost.

907 SIGNS, BARRIERS AND LIGHTS

Contractor shall provide signs, barriers and lights as shown in the drawing in Book of Drawings at the locations where the traffic is being carried off the existing road to the deviation and back again to existing road. The Contractor shall provide ramps and carry out any other measures as instructed by the Engineer to safely carry traffic from the road to deviation.

Contrary to what has been specified in this clause the road signs provided shall be fully reflectorised and in conformity with clause 9.1 of the "Manual for Traffic Signs in Kenya Part II".

909 ASSISTANCE TO PUBLIC

In addition to provision of clause 909, Contractor shall maintain close liaison with the relevant authorities to clear any broken down or accident vehicles from the deviations and the main road, in order to maintain smooth and safe flow of the traffic.

912 MEASUREMENT AND PAYMENT

(a) Construct Deviation

The Contractor shall be paid only 50% of the rate for this when he completes deviation road to the satisfaction of the Engineer. The balance shall be paid in equal monthly instalments over the contract period, as he satisfactorily maintains the deviation (as per clause 904 and 905 above) when it is in operation.

SECTION 10 - GRAVEL WEARING COURSE

1001 GENERAL

The material for gravel wearing course shall be won from sources identified by the contractor but approved by the Engineer. Method B, specified in the Standard Specification, shall be used as the method of measurement.

The gravel to be used shall meet all the requirements of Clause 10 of the Standard Specification for Road and Bridge Construction. The compaction shall be at least 95 % MDD (AASHTO T180) at a moisture content of between 80% and 105% of the Optimum Moisture Content (AASHTO T180).

1003 MATERIAL REQUIREMENTS

The material requirements for natural gravel for re-gravelling shall be as follows:

The grading of the gravel after placement and compaction on the road shall have a smooth grading curve within and approximately parallel to the following envelope.

Sieve (mm)	% by weight
37.5	100
28	85-100
20	85-100
14	65-100
10	55-100
5	35-92
2	23-77
1	18-62
0.425	14-50
0.075	10-40

The material shall have a minimum CBR of 20 at 95% MDD (AASHTO T180) and 4 day soak. The plasticity index shall not exceed 20%.

SECTION 12 - NATURAL MATERIAL SUBBASE AND BASE

1201 GENERAL

Where instructed by the Engineer, the Contractor shall undertake repairs, widening and reprocessing to the existing carriageway and shoulders in accordance with sections 12 and 14 of the Special Specifications.

a) Areas to be scarified and reprocessed

The contractor will scarify, add new material and reprocess sections as determined by the Engineer.

b) Pavement repairs

The Contractor will carry out repairs to base and subbase as directed by the Engineer and according to Specifications given in Sections 12 and 14 of the Standard Specifications.

c) Pavement widening

The Contractor shall, as directed by the Engineer, bench and compact the subgrade to 100% MDD (AASHTO T99), provide lay and compact material for sub-base and base as directed by the Engineer and in accordance with Sections 5 and 12 of the Standard Specifications.

1203 MATERIAL REQUIREMENTS

Natural materials for base and sub-base shall conform to the specifications given in Section 12 of the Standard Specifications for Road and Bridge Construction for cement and lime improved base and sub-base.

1209 MEASUREMENT AND PAYMENT

Natural material for sub-base and base shall be measured by the cubic metre placed and compacted upon the road calculated as the product of the compacted sectional area laid and the length.

1210 HAND PACKED STONE

Hand packed stone base is a layer of hand laid stone of defined size and durable in nature, laid in a manner such that when proof rolled and compacted it forms a stable and dense matrix as a road base.

a) Material for Hand Packed Stone Base

This shall consist of durable stone with nominal base dimensions of 75 mm square and minimum height of 150 mm or when compacted to give a layer of 150 mm. The stone shall be class C with the following requirements:

LAA 45 max
ACV 32 max
SSS 12 max
FI 30 max
CR 60 min.

It shall be free from foreign matter. The fines passing 0.425 mm sieve shall be **NONPLASTIC**

b) Laying

The stone shall be laid by hand closely together. The stone shall be carefully bedded and tightly wedged with suitable spalls. The base of the stone shall alternate with the apex in all directions or as directed by the Engineer. The layer shall be proof rolled with a loaded scrapper or truck with a minimum axle load of 8 tonnes in the presence of the Engineer who shall approve of its stability before compaction.

c) Compaction

This shall be by a steel wheeled roller of at least five tonnes per metre width of roll. It shall consist of four static runs or until there is no movement under the roller. There shall follow vibratory compaction until an average dry density of 85% minimum of specific gravity of stone has been achieved. No result shall be below 82% of specific gravity. The surface of the compacted layer shall then be levelled by quarry dust (0/6 mm). The dust shall have the following specifications:

The stone shall be class C

Grading

Sieve Size	% Passing
10	100
6.3	90-100
4	75-95
2	50-70
1	33-50
0.425	20-33
0.300	16-28
0.150	10-20
0.075	6-12

The dust shall be free from foreign matter and fines passing 0.425 mm sieve shall be **NON-PLASTIC**. The maximum layer shall be 40 mm or as directed by the Engineer

d) Measurement and Payment

Payment shall be by the cubic metre laid (m^3). Measurement of volume shall be determined as the product of length and compacted thickness laid. The rate quoted for this item should include the cost for laying the levelling quarry dust layer, as no extra payment shall be made for this layer.

1211 REPROCESSING EXISTING PAVEMENT LAYERS

(a) General

The existing surfacing and the base shall be reprocessed with additional material and the composite mixture shall be compacted to form the sub-base layer.

Before commencement of the work the Contractor shall propose plants and equipment he proposes to use for this activity.

The Contractor after approval of his proposal shall carry out test section in accordance with Section 3 of the Standard Specifications.

(b) The existing surfacing and base course shall be broken up to specified depth and reprocessed in place, where required. The underlying layers shall not be damaged, and material from one layer may normally not be mixed with that of another layer. Where unauthorized mixing occurs or where the material is contaminated in any way by the actions of the Contractor, and the contaminated material does not meet the specified requirements of for the particular layer, he shall remove such material and replace it with other approved material, all at his own expense.

(c) Any mixture composition of the new layer must not contain more than 30% of the bituminous material by volume. The mixture must not contain pieces of bound bituminous material larger than 37.5mm, and any such material shall be removed at the Contractor's cost.

(d) The requirements for imported material used in the respective pavement layers shall comply with the limitations, norms, sizes and strengths specified in the Standard Specifications clause 1203(b) and (d) and shall be worked as per Section 14 of the Standard Specification.

(e) Material reworked in-situ or that obtained from existing pavement is not expected to comply with the material requirements but the reworking should achieve the specified requirements.

(f) Where the thickness of any existing pavement layer requires to be supplemented within reprocessing and the thickness of the additional material after compaction will be less than 100mm, the existing layer shall be scarified to a depth that will give a layer thickness of at least 100mm after compacting the loosened existing and the additional material.

Controlling the Reworked Depth

The Contractor shall submit a proven method to method to control the depth of excavation, or layer to be reworked, to the Engineer for approval. The Engineer may order a trial section to be reprocessed before any major length of the road is rehabilitated.

Excavations

Excavations in the pavement shall be kept dry. In the event of water penetrating the underlying layers, construction of the consecutive layers shall be postponed until the underlying layers are dry enough to

accommodate the construction plant without deforming or otherwise showing distress.
Step construction shall be carried out per layer at the joint when excavating, both longitudinally (if appropriate) and perpendicular to the direction of travel. The step width shall be 500mm perpendicular to the direction of travel, and 150mm long longitudinally, unless otherwise instructed by the Engineer.
Special care shall be taken when compacting the new material at the joint, ensuring that the specified density is achieved.

Measurement and Payment

(a) Item: In-situ reprocessing of existing pavement layers as sub-base compacted to specified density (95% MDD AASHTO T180) and thickness.

Unit: M^3
The tendered rate shall include full compensation for breaking up the existing pavement layer to specified depth, breaking down and preparing the material and the spreading and mixing in of any additional material

(a) Item: The addition of extra gravel to sub-base.

Unit: M^3

The tendered rate shall include full compensation for procuring and addition of the material to the in-situ scarified layers and the transportation of the material over unlimited free-haul distance. The tendered rates will also include full compensation for prospecting for materials and any payments necessary to acquire the specified quality material.

(b) <u>Excavation of existing bituminous pavement materials including unlimited free-haul.</u>

Unit: M^3

The tendered rates shall include full compensation for excavating the existing bituminous material from the pavement layers and for loading, transporting the material for unlimited free-haul, off-loading and disposing of the materials as specified.

(c) <u>Excavation of the existing pavement</u>

Unit: M^3

The tendered rate shall include full compensation for excavating the existing material from the pavement layers and for loading, transporting the material for unlimited free-haul distance, off-loading and disposing of the material as specified.

<u>Payment will only be made for breaking up and excavating existing pavement layers to the specified depth if the material is to be removed to spoil</u>

SECTION 14 - CEMENT AND LIME TREATED MATERIAL

1401 SCOPE OF SECTION
This section deals with the addition and mixing in of cement or lime, herein after described as the "stabilizer", to the upper layers of earthworks as described in section 5, natural materials as described in section 12, and crushed materials as described in section 13, of the Specification.
Following the addition and mixing in of the stabilizer the material is referred to as "treated material".
Treated material may either be lime or cement improved material, or cement stabilized material.
This section also deals with the compaction and curing of the treated material.
Treated materials may be used in the upper earthworks layers, shoulder layers, subbase layer or base layer.

1402 SOURCES OF MATERIALS
In accordance with Sections 5, 12, and 13 of this Specification.

1403 MATERIAL REQUIREMENTS
(a) Natural materials
In accordance with Sections 5, 12, and 13 of this Specification.
(b) Cement and Lime
(i) Cement
Unless otherwise specified cement shall be ordinary Portland cement complying with the requirements of section 2 of this specification.
(ii) Lime
Lime shall be hydrated calcium lime or quicklime and shall comply with the requirements of section 2 of this specification.
(iii) Storage and Handling
The requirements of Section 17 of this specification shall apply to cement.All lime shall be kept under cover and protected from moisture. Consignments shall be used in the same sequence as they are delivered. Stocks which become damaged or which are stored on the Site for more than 3 months shall not be used, and shall be replaced at the contractor's expense. Operators and labour shall be provided with protective clothing, masks and goggles.

STANDARD SPECIFICATION FOR ROAD AND BRIDGE CONSTRUCTION CEMENT AND LIME TREATED MATERIAL Page 14.2

1404 AMOUNT OF STABILIZER TO BE ADDED.

The amount of cement or lime to be added shall be determined by the Engineer following laboratory trials, and site trials carried out by the Contractor in accordance with Section 2 of this Specification.

1405 MIX-IN-PLACE METHOD OF CONSTRUCTION

The mix-in-place method may be used for the addition and mixing in of stabilizer.

(a) Mixing equipment

The equipment for pulverizing the material and mixing in the stabilizer shall be purpose - built equipment, capable of pulverizing the materials and mixing in the stabilizer to the full depth of the loose layer necessary to give the specified thickness of compacted material mixed and compacted in accordance with this section of this Specification.
The equipment may be either single or multipass machines and shall only be acceptable if, during the site trials carried out in accordance with Section 2 of this Specification, it can produce material to the specified requirements.
If single-pass equipment is used for plastic soils, the degree of pulverization as determined in accordance with Test 17 of BS 1924 shall be not less than 80 percent.

The mixers shall be equipped with a device for controlling the depth of processing and mixing blades shall, be maintained or reset periodically so that the correct depth of mixing is obtained at all times.
Mixing by grader will not be permitted.

(b) Preparation of the layer

Before the stabilizer is applied, the material to be treated shall be spread and broken down and oversize material removed so that the maximum size of the particles is not more than specified. If multi-pass processing is employed, the material shal1 first be pulverised to the required tilt by successive passes. The material shall then be shaped true to line, grade and cross-section and, if required, lightly compacted. The loose thickness shall be such as to give the specified thickness after full compaction has been carried out. The moisture content of the layer before the addition of the stabilizer shall be adjusted to within the range of 70% to 85% of the Optimum Moisture Content (AASHTO T180).

(c) Spreading the stabilizer

After the layer to be treated has been prepared to the satisfaction of the Engineer, the stabilizer shall be uniformly spread ever the width to be worked at the specified rate. If a spreader is used to spread the stabilizer ahead of the STANDARD SPECIFICATION FOR ROAD AND BRIDGE CONSTRUCTION CEMENT AND LIME TREATED MATERIAL Page 14.3mixer, it shall be fitted with a device to ensure a uniform and controllable rate of spread both transversely and longitudinally. Only sufficient stabilizer for immediate use shall be spread ahead of the mixing operation and any which, in the opinion of the Engineer, becomes defective, shall be replaced at the Contractor expense. Only equipment actually used in the spreading or mixing operation shall be allowed to pass over the stabilizer, when so spread, before it has been mixed into the material to be treated.

(d) Mixing and watering

Immediately after the stabilizer has been spread, it shall be thoroughly and intimately mixed into the material, for the full depth of the layer. Mixing shall continue until the resulting mixture forms a fine and homogeneous tilt. The mixing machine shall be set so that it cuts at least 100mm into the edge of any adjoining lane processed previously so as to ensure that all the material forming the layer has been property processed. Care shall be taken both during this and during subsequent watering operations that the underlying layer is not disturbed and that no material from the underlying layer or shoulders is mixed with that being processed. If watering is necessary to bring the mixture to the required moisture content, then this shall be done after spreading and mixing in the stabilizer. Water shall be added in a uniform and controllable manner and, where necessary, in successive increments. Each increment shall be mixed in a separate mixing operation. Care shall be taken to avoid a concentration of water at any point or a flow of water over the surface.
Any part of the mixture which becomes too wet after the stabilizer has been added and before the mixture is compact will be rejected and any such part shall be allowed to dry out until its moisture content is satisfactory and shall be retreated with fresh stabilizer and finished off in accordance with this Clause.
Throughout the process of mixing in the stabilizer and water, a uniform thickness of the mixture shall be maintained and, if necessary, the mixture shall be graded to maintain the correct uncompacted thickness and shape. Any part of the mixture that becomes segregated shall be removed and replaced.

1406 STATIONARY PLANT METHOD OF CONSTRUCTION

(a) Mixing Equipment

Stationary mixing plant shall be of the power driven paddle or pan type and may be of the batch or continuous type.
STANDARD SPECIFICATION FOR ROAD AND BRIDGE CONSTRUCTION CEMENT AND LIME TREATED MATERIAL Page 14.4
If batch mixers are used, the appropriate measured amounts of material and stabilizer shall first be placed in the mixer, water being then added as necessary to bring the moisture content of the resulting mixture

within the range determined in the laboratory and site trials. Special care shall be taken with batch type paddle mixers to ensure that the stabilizer is spread uniformly in the loading skip so that it is fed evenly along the mixing trough and that with both paddle and pan mixers the stabilizer is proportioned accurately by a separate weighing or proportioning device from that used for the material being stabilised. Mixing shall be continued until the mixture has the required uniformity and for not less than 1 minute unless a shorter minimum period is permitted by the Engineer after satisfactory trials.
If continuous mixing is used, the paddles, baffles and rate of feed of materials shall be adjusted to give uniformly mixed material.
If a spray is used for distributing water into the mixer, it shall be adjusted to give uniformity in moisture content throughout the mix.

(b) Transporting

Mixed material shall be transported to the road in suitable vehicles. Material that becomes segregated or is affected by weather shall be removed and replaced at the Contractor's expense.

(c) Laying

The mixed material shall be spread by means of a mechanical paver to the required width and such thickness that the tolerance requirements as specified in Section 3 of this Specification are obtained after final compaction. Segregation shall be avoided and the layer shall be free from pockets of coarse or fine material.

1407 COMPACTION AND FINISHING

For cement treated materials final compaction and finishing shall be completed within 2 hours after the cement comes into contact with the material to be treated.
For lime treated materials, final compaction and finishing shall be completed within 4 hours after the lime comes into contact with the material to be treated.

(a) Thickness limitations

The compacted thickness of any treated layer laid, processed and compacted at one time shall not exceed 180mm. Where a greater thickness is required, the material shall be laid in two or more layers.
The compacted thickness of any base layer shall not be less than 3 times the maximum particle size of the material and the compacted thickness of any subbase layer shall not be less than twice the maximum particle size of the material.

(b) Compaction requirements

The minimum density for all lime and cement treated materials shall be 95% MDD (AASHTO T180). The moisture content at the time of compaction shall be between 95% and 105% of Optimum Moisture Content (AASHTO Tl80).

(c) Finishing

The surface finish after compaction of any treated layer shall be free from ridges, compaction planes, laminations, loose and segregated material and other surface irregularities and shall be to line and level and within the tolerances specified in Section 3 of this Specification. If the surface fails to meet the requirements of this Specification the Contractor shall take the action set out in the appropriate part of Section 3 of this Specification or such other action as the Engineer may instruct or agree.

1408 JOINTS BETWEEN NEW AND EXISTING WORK

The forming of construction joints and the protection of previously treated or other work shall be carried out so as to produce a uniformly compacted and homogeneous layer free from ridges or, other irregularities.
Full width working, without longitudinal joints, will generally be required. Half-width working may be instructed by the Engineer to pass traffic. When forming longitudinal joints, mix-in-place method at least 100mm of the first laid half-width layer shall be retreated and mixed in with the second half-width layer.
When forming transverse joints, with the mix-in-place method, at least 1.0m length of the previously laid treated work shall be incorporated into the new treated layer and the Engineer may instruct that the percentage of stabilizer be increased at these places.
When forming longitudinal or transverse joints with the stationary plant method of construction, previous work shall be cut back to expose fully treated and compacted material.

1409 PROTECTION AND CURING

Treated layers shall be kept continuously damp by lightly spraying with water, from completion of compaction until one of the curing systems specified below is placed.
Treated layers shall be protected, within 4 hours of completion of compaction in the case of cement treated material and 8 hours in the case of lime treated material, by one of the following methods: -

(i) Completely covering the layer with clear or light coloured approved polythene sheeting of minimum thickness 0.1mm. The sheeting shall be laid to cover the whole of the surface of the layer. At joints the sheeting shall be lapped by at least 500mm and any damaged sheeting shall be replaced at the Contractor's expense.
STANDARD SPECIFICATION FOR ROAD AND BRIDGE CONSTRUCTION CEMENT AND LIME TREATED MATERIAL Page 14.6
The sheeting shall be securely held in contact with the layer by an approved method.

(ii) Completely covering the treated material with a layer of damp uncompacted gravel or soil material of minimum thickness 100mm. This material, which may be that forming the next layer, shall be kept continuously damp.

(iii) Spraying the layer with A3 anionic emulsion at a rate of 1.51/m2 to be applied in accordance with Parts A and B of Section 15 of this Specification. This method shall not be permitted where the following layer is to be a bituminous mix in accordance with Section 16 of this Specification.
Unless otherwise instructed by the Engineer, no prime will be required where method (iii) is adopted and the contractor shall comply with the requirements of Parts A and B of Section 15 of this Specification.

Plant used for dumping and spreading material, and the application of water or emulsion shall be approved by the Engineer and shall have individual axle loads not exceeding 6 tonnes.
Immediately prior to placing protection methods (i) or (iii) the surface of the treated layer shall be made thoroughly damp by lightly spraying with water.
The curing system shall be kept in place and intact for a minimum of 7 days after completion of compaction although small areas may be temporarily removed for the purposes of carrying out control testing but only for the minimum amount of time required for the testing.

1410 TRAFFIC

Traffic or equipment, other than that actually engaged in the various treatment or protection processes, shall not run over the layer being processed or compacted.
On completion of curing no traffic or equipment shall be allowed on the treated layer with the exception of that required for proofrolling, priming or construction of the subsequent layer.

1411 TOLERANCES

(a) Geometric tolerances

The treated upper earthworks, sub-base and base shall be constructed within the tolerances specified in Section 3 of this Specification.

(b) Amount of stabilizer

(i) Mix-in-place method of construction.
STANDARD SPECIFICATION FOR ROAD AND BRIDGE CONSTRUCTION CEMENT AND LIME TREATED MATERIAL Page 14.7
The average amount of stabilizer, measured before mixing, over a length of 100 m, shall not be less than the amount ordered.
The average amount of stabilizer in the treated material, measured at five points over a length of 100 m, shall not be less than the amount ordered.
The amount of stabilizer, measured after mixing, shall at no point be less than 70% or more than 130% of the amount ordered.

(ii) Stationary plant method of construction
The average amount of stabilizer in the treated material measured at five points over a length of 100m shall not be less than the amount ordered.
The amount of stabilizer measured after mixing shall, at no point be less than 90% or more than 110% of the amount ordered.

(iii) Determination of stabilizer content
The cement content in mixed materials shall be determined according to Test 14 of BS 1924 or to AASHTO T211-65 (1982).
The lime content in mixed materials shall be determined according to Test 15 of BS 1924.

1412 MEASUREMENT AND PAYMENT
For the purpose of measurement and payment no distinction shall be made between the mix-in-place and stationary plant methods of construction.
The work of providing, placing, spreading mixing, watering shaping and hauling the materials to be stabilised will be measured and paid for in Sections 5, 11, 12 and 13, as appropriate, of this Specification.
For the additional work of providing and mixing-in the stabilizer and curing the treated materials the Contractor will be paid as follows:-

(a) Item: Stabilizer
Unit: Tonne of each type of stabilizer
The provision of the stabilizer shall be measured by the tonne calculated as the specified weight of stabilizer added to the material.
The rate for stabilizer shall include for the cost of provision, storage, handling, transport and spreading of the stabilizer at any point on the Works and complying with the requirements of Clauses 1401, 1403, 1404, 1405, 1406, 1408 and 1411 of this Specification.

(b) Item: Mix-in stabilizer
Unit: m3
STANDARD SPECIFICATION FOR ROAD AND BRIDGE CONSTRUCTION CEMENT AND LIME TREATED MATERIAL Page 14.8
Mixing stabilizer into the material shall be measured by the cubic metre of treated material calculated as the product of the compacted sectional area specified to be treated and the length instructed.
The rate for mixing shall include for the cost of complying with the requirements of Section 14 of this Specification.

(c) Item: Curing treated material
Unit: m2

Curing treated material shall be measured by the square metre of the layer cured calculated as the product of the specified width of treated layer and the length cured.
The rate for curing shall include for the cost of watering, provision placing and maintenance of the curing system, and for complying with the requirements of Clause 1409 and Parts A and B of Section 15 of this Specification.

SECTION 15 - BITUMINOUS SURFACE TREATMENTS

1501B PREPARATION OF SURFACE

In addition to requirements of Clause 1503B of the Standard Specifications, the contractor shall prepare and Repair Cracks, Edges, Potholes and Other Failures as follows: -

a) **Cracks 3.0mm or less in width**

The entire crack area shall be cleaned by brushing with a wire brush and then blowing with a compressed air jet and the crack sealed with 80/100 cutback bitumen using a pouring pot or pressure lance and hand squeegee. The surface shall then de dusted with sand or crushed dust.

b) **Cracks greater than 3.0mm in width**

Before these cracks are filled a steel wire brush or router shall be used to clean them and then a compressed air jet shall be used to clean and remove any foreign or lose material in the crack until the entire crack area is clean.

When the crack and surrounding area have been thoroughly cleaned, dry sand shall be forced into the crack until it is sealed in the manner specified for cracks less than 3.0mm width.

c) **Potholes, edges and other repair areas**

Where instructed, the Contractor shall prepare areas for the repair of potholes, road edges and other repair areas by excavating off unsuitable or failed material and debris, trimming off excavated edges, cleaning and compacting the resulting surfaces and applying MC 30 or MC 70 cut-back bitumen prime coat at a rate of 0.8-1.2 litres/m^2, all as directed by the Engineer. Measurement and payment shall be made under the relevant item of Bill No 15. Where the surface repair on potholes and edges are to be carried out, Asphalt Concrete Type I (0/14gradation) shall be used. Bituminous material for repair of failures and other repair areas shall be paid for under the relevant item of Bill No 16

PART B - PRIME COAT

1502B MATERIALS FOR PRIME COAT AND TACK COAT.

For prime coat, the binder shall be a medium-curing cutback MC 70 unless otherwise directed by the Engineer.

The rate of spray of bituminous prime coat refers to the gross volume of the cutback bitumen, that is to say the volume of the bitumen plus dilatants.

Prime coat shall be applied to gravel areas that are to receive bituminous mixes as directed by the Engineer.

The tack coat shall consist of bitumen emulsion KI-60 unless otherwise directed by the Engineer.

The rates of spray of the binder shall be as instructed by the Engineer and shall generally be within the range 0.8-1.2 litres/square metre.

1511C MEASUREMENT AND PAYMENT

(a) Seal coat

Seal coats shall be measured by the litre, for each type of bituminous binder for each seal coat, calculated as the product of the area in square metres sprayed and the rate of application in litres/square metres, corrected to 15.6 ^{o} C

SECTION 16 - BITUMINOUS MIX BASES, BINDER COURSES AND WEARING COURSES

This section covers different types of bituminous mixes for base and surface (wearing and binder courses) and is divided into the following parts: -

Part A General

Part B Asphalt Concrete for carriageway

PART A – GENERAL

1601A SCOPE OF PART A

Part A comprises all the general requirements for bituminous mixes, which apply to Part B as well.

1602A REQUIREMENTS FROM OTHER SECTIONS

The following sections of this Specification apply to Part B of this section and shall be read in conjunction therewith:-

Section 2	Materials and Testing of Materials
Section 3	Setting Out and Tolerances
Section 6	Quarries, Borrow Pits, Stockpile and Spoil Areas
Section 15	Bituminous Surface Treatments and Surface Dressing

1603A CONSTRUCTION PLANT

(a) **General**

The Contractor shall submit to the Engineer in accordance with Section 1 of its Specification, full details of the construction plant he proposes to use and the procedures he proposes to adopt for carrying out the permanent Works.

The Engineer shall have access at all times to construction plant for the purposes of inspection. The Contractor shall carry out regular calibration checks in the presence of the Engineer and shall correct forthwith any faults that are found.

All construction plant used in the mixing, laying and compacting of bituminous mixes shall be of adequate rated capacity, in good working condition, and shall be acceptable to the Engineer. Obsolete or worn-out plant will not be allowed on the work.

(b) **Mixing Plant**

Bituminous materials shall be mixed in a plant complying with ASTM Designation D995 and shall be located on the Site unless otherwise agreed by the Engineer. It shall be equipped with at least three bins for the storage of heated aggregates and a separate bin for filler. All bins shall be covered to prevent the ingress of moisture.

The plant may be either the batch-mix type or the continuous-mix type and shall be capable of regulating the composition of the mixture to within the tolerances specified in Clause 1614A of this Specification.

The bitumen tank shall be capable of maintaining its contents at the specified temperature within a tolerance of 5^0C and a fixed thermometer easily read from outside the tank. Any

bitumen that has been heated above 180^0C or has suffered carbonization from prolonged heating shall be removed from the plant and disposed of.

(c) **Laying Plant**

Bituminous materials shall be laid by a self-propelled spreader finisher equipped with a hopper, delivery augers and a heated adjustable vibrating screed. It shall be capable of laying bituminous materials with no segregation, dragging, burning or other defects and within the specified level and surface regularity tolerance. Delivery augers shall terminate not more than 200mm from the edge plates.

(d) **Compaction Plant**

The Contractor shall provide sufficient rollers of adequate size and weight to achieve the specified compaction. Prior to commencing the laying of bituminous mixes in the permanent Works the Contractor shall carry out site trials in accordance with Section 2 of this Specification to demonstrate the adequacy of his plant and to determine the optimum method of use and sequence of operation of the rollers.

It is important to achieve as high a density as possible at the time of construction and it is expected that vibrating rollers will be required to produce the best results. However, it is essential that thorough pre-construction trials are carried out to ensure that:-

(a) The roller is set up to have the optimum amplitude and frequency of vibration for the particular material being laid

(b) That the roller does not cause breakdown of the aggregate particles.

(c) That the optimum compaction temperatures are established which allow compaction without causing ripple effects or other distortions of the surfacing.

1604A PREPARATION OF SURFACE

Immediately before placing the bituminous mix in the pavement, the existing surface shall be cleaned of all material and foreign matter with mechanical brooms or by other approved methods. The debris shall be deposited well clear of the surface to be covered.

Any defect of the surface shall be made good and no bituminous mix shall be laid until the Engineer has approved the surface.
A tack coat shall be applied in accordance with Section 15 of this Specification. If the Engineer considers a tack coat is required prior to laying the bituminous mix or between layers of the bituminous mix, due solely to the
Contractor's method of working, then such tack coat shall be at the Contractor's expense.

1605A DESIGN AND WORKING MIXES

At least two months prior to commencing work using a bituminous mix, the Contractor shall, having demonstrated that he can produce aggregates meeting the grading requirements of the Specification, submit samples of each constituent of the mix to the Engineer. The Engineer will then carry out laboratory tests in order to decide upon the proportion of each constituent of the initial design mix or mixes to be used for site trials to be carried out in accordance with Clause 1606A of this Specification.

Should the Engineer conclude from the site trials that the mix proportion or aggregate grading are to be changed, the Contractor shall submit further samples of the constituents and carry out further site trials all as directed by the Engineer.

The Engineer may instruct the alteration of the composition of the -75 micron fraction of the aggregates by the addition or substitution of mineral filler. The Engineer may also instruct the alteration of all or part of the -6.3mm fraction of the aggregates by the addition or substitution of natural sand.

The Contractor shall make the necessary adjustments to his plant to enable the revised mix to be produced.

Following laboratory and site trials the Engineer will determine the proportions of the working mix and the Contractor shall maintain this composition within the tolerances given in Clause 1614A.

Should any changes occur in the nature or source of the constituent materials, the Contractor shall advise the Engineer accordingly. The procedure set out above shall be followed in establishing the new mix design.

1606A SITE TRIALS

Full scale laying and compaction site trials shall be carried out by the Contractor on all asphalt pavement materials proposed for the Works using the construction plant and methods proposed by the Contractor for constructing the Works. The trials shall be carried out with the agreement, and in the presence of the Engineer, at a location approved by the Engineer.

The trials shall be carried out to: -

a) Test materials, designed in the laboratory, so that a workable mix that satisfies the specification requirements can be selected.

b) To enable the Contractor to demonstrate the suitability of his mixing and compaction equipment to provide and compact the material to the specified density and to confirm that the other specified requirements of the completed asphalt pavement layer can be achieved.

Each trial area shall be at least 100 metres long and to the full construction width and depth for the material. It may form part of the Works provided it complies with this Specification. Any areas that do not comply with this Specification shall be removed.

The Contractor shall allow in his programme for conducting site trials and for carrying out the appropriate tests on them. The trial on any pavement layer shall be undertaken at least 21 days ahead of the Contractor proposing to commence full-scale work on that layer.

The Contractor shall compact each section of trial over the range of compactive effort the Contractor is proposing and the following data shall be recorded for each level of compactive effort at each site trial: -

i. The composition and grading of the material including the bitumen content and type and grade of bitumen used.
ii. The moisture content of aggregate in the asphalt plant hot bins.
iii. The temperature of the bitumen and aggregate immediately prior to entering the mixer, the temperature of the mix on discharge from the mixer and the temperature of the mix on commencement of laying, on commencement of compaction and on completion of compaction. The

temperature of the mixture is to be measured in accordance with BS 598, Part 3, Appendix A.

iv. The type, size, mass, width of roll, number of wheels, wheel load, tyre pressures, frequency of vibration and the number of passes of the compaction equipment, as appropriate for the type of roller.

v. The target voids and other target properties of the mix together with the results of the laboratory tests on the mix.

vi. The density and voids achieved.

vii. The compacted thickness of the layer.

viii. Any other relevant information as directed by the Engineer.

At least eight sets of tests shall be made by the Contractor and the Engineer on each 100 metres of trial for each level of compactive effort and provided all eight sets of results over the range of compactive effort proposed by the Contractor meet the specified requirements for the material then the site trial shall be deemed successful. The above data recorded in the trial shall become the agreed basis on which the particular material shall be provided and processed to achieve the specified requirements.

1607A MIXING OF AGGREGATES AND BITUMEN

The bitumen shall be heated so that it can be distributed uniformly and care shall be taken not to overheat it. The temperature shall never exceed 170^0 C for 80/100-penetration grade bitumen.

The aggregates shall be dried and heated so that they are mixed at the following temperatures: -

125-165^0C when 80/100 bitumen is used

The dried aggregates shall be combined in the mixer in the amount of each fraction instructed by the Engineer and the bitumen shall then be introduced into the mixer in the amount specified. The materials shall then be mixed until a complete and uniform coating of the aggregate is obtained.

The mixing time shall be the shortest required to obtain a uniform mix and thorough coating. The wet mixing time shall be determined by the Contractor and agreed by the Engineer for each plant and for each type of aggregate used. It shall normally not exceed 60 seconds.

1608A TRANSPORTING THE MIXTURE

The bituminous mix shall be kept free of contamination and segregation during transportation. Each load shall be covered with canvas or similar covering to protect it from the weather and dust.

1609A LAYING THE MIXTURE

Immediately after the surface has been prepared and approved, the mixture shall be spread to line and level by the laying plant without segregation and dragging.

The mixture shall be placed in widths of one traffic lane at a time, unless otherwise agreed by the Engineer. The compacted thickness of any layer shall be at least 2.5 times the maximum size of the aggregate for wearing course and at least 2 times for binder course. The minimum thickness shall be 25mm.

Only on areas where irregularities or unavoidable obstacles make the use of mechanical laying impracticable, may the mixture be spread and compacted by hand.

1610A COMPACTION

Immediately after the bituminous mixture has been spread, it shall be thoroughly and uniformly compacted by rolling.

The layer shall be rolled when the mixture is in such a condition that rolling does not cause undue displacement or shoving.

The number, weight and type of rollers furnished shall be sufficient to obtain the required compaction while the mixture is in a workable condition. The sequence of rolling operations shall be as agreed with the Engineer and proved during site trials. Initial rolling with steel tandem or three-wheeled roller shall follow the laying plant as closely as possible. The rollers shall be operated with the drive roll nearest the laying plant, at a slow and uniform speed (not exceeding 5 Km/Hr).

Rolling shall normally commence from the outer edge and proceed longitudinally parallel to the centreline, each trip overlapping one half of the roller width. On super elevated curves, rolling shall begin at the low side and progress to the high side. Where laying is carried out in lanes care must be taken to prevent water entrapment.

Intermediate rolling with a pneumatic-tyred or vibratory roller shall follow immediately. Final rolling with a steel-wheeled roller shall be used to eliminate marks from previous rolling.

To prevent adhesion of the mixture to the rollers, the wheels shall be kept lightly moistened with water.

In areas too small for the roller, a vibrating plate compactor or a hand tamper shall be used to achieve the specified compaction.

1611A FINISHING, JOINTS AND EDGES

Any mixture that becomes loose and broken, mixed with dirt or foreign matter or is in any way defective, shall be removed and replaced with fresh hot mixture, which shall be compacted to conform to the surrounding area.

Spreading of the mixture shall be as continuous as possible. Transverse joints shall be formed by cutting neatly in a straight line across the previous run to expose the full depth of the course. The vertical face so formed shall be painted lightly with hot 80/100 penetration grade bitumen just before the additional mixture is placed against it.

Longitudinal joints shall be rolled directly behind the paving operation. The first lane shall be placed true to line and level and have an approximately vertical face. The mixture placed in the abutting lane shall then be tightly crowded against the face of the previously placed lane. The paver shall be positioned to spread material overlapping the joint face by 20-30mm. Before rolling, the excess mixture shall be raked off and discarded.
When the abutting lane is not placed in the same day, or the joint is destroyed by traffic, the edge of the lane shall be cut back as necessary, trimmed to line and painted lightly with hot 80/100 penetration grade bitumen just before the abutting lane is placed.

Any fresh mixture spread accidentally on the existing work at a joint shall be carefully removed by brooming it back on to uncompacted work, so as to avoid formation of irregularities at the joint. The finish at joints shall comply with the surface requirements and shall present the same uniformity of finish, texture and density as other sections of the work.

The edges of the course shall be rolled concurrently with or immediately after the longitudinal joint. In rolling the edges, roller wheels shall extend 50 to 100mm beyond the edge.

1612A SAMPLING AND TESTING OF BITUMINOUS MIXTURES

The sampling of bituminous mixtures shall be carried out in accordance with AASHTO T168 (ASTM Designation D979).

1613A QUALITY CONTROL TESTING

During mixing and laying of bituminous mixtures, control tests on the constituents and on the mixed material shall be carried out in accordance with Clause 1612A and Section 2 of this Specification.

If the results of any tests show that any of the constituent materials fail to comply with this Specification, the Contractor shall carry out whatever changes may be necessary to the materials or the source of supply to ensure compliance.

If the results of more than one test in ten on the mixed material show that the material fails to comply with this Specification, laying shall forthwith cease until the reason for the failure has been found and corrected. The Contractor shall remove any faulty material laid and replace it with material complying with this Specification all at his own expense.

1614A TOLERANCES

Surfacing courses and base shall be constructed within the geometric tolerances specified in Section 3 of this Specification.

The Contractor shall maintain the composition of the mixture as determined from the laboratory and site trials within the following tolerances, per single test: -

Bitumen Content	0.3% (by total weight of total mix)
Passing 10mm sieve and larger sieves	6% (by total weight of dry aggregate including mineral filler)
Passing sieves between 10mm and 1.0mm sieves	4% (by total weight of dry aggregate including mineral filler)
Passing sieves between 1.0mm and 0.075mm sieve	3% (by total weight of dry aggregate including mineral filler)
Passing 0.075mm sieve	2% (by total weight of dry aggregate including mineral filler)

The average amount of bitumen in any length of any layer, calculated as the product of the bitumen contents obtained from single tests and the weight of mixture represented by each test, shall not be less than the amount ordered.

The average amount of bitumen for each day's production calculated from the checked weights of mixes shall not be less than the amount ordered.

The average amount of bitumen in any length of any layer, calculated as the product of the bitumen contents obtained from single tests and the weight of mixture represented by each test, shall not be less than the amount ordered.

The average amount of bitumen for each day's production calculated from the checked weights of mixes shall not be less than the amount ordered.

The final average overall width of the upper surface of a bituminous mix layer measured at six equidistant points over a length of 100m shall be at least equal to the width specified. At no point shall the distance between the centreline of the road and the edge of the upper surface of a bituminous mix layer be narrower than that specified by more than 13mm.

1615A MEASUREMENT AND PAYMENT

No separate measurement and payment shall be made for complying with the requirements of Clauses 1601A to 1614A inclusive and the Contractor shall be deemed to have allowed in his rates in Parts B and C of Section 16 of this Specification for the costs of complying with the requirements of Part A of Section 16 of this Specification

PART B - ASPHALT CONCRETE FOR SURFACING

1601B DEFINITION

Asphalt concrete means a thoroughly controlled, hot-mixed, hot-laid, plant mixture of well-graded dried aggregate and penetration grade bitumen, which, when compacted forms a dense material.
A distinction is drawn between asphalt concrete Type I (High Stability) and asphalt concrete Type II (Flexible). The asphalt concrete type to be used will be Type I.

1602B MATERIALS FOR ASPHALT CONCRETE TYPE 1

a) **Type of bituminous material**

The type of material to be used on severe sites will be of the continuously graded type similar to Asphaltic Concrete or Close Graded Macadam. It is essential that these materials are sealed with a single or double surface dressing or a Cape seal.

b) **Penetration Grade Bitumen**

Bitumen shall be 80/100 penetration grade since material is being laid at an altitude of more than 2,500m.

c) **Aggregate**

Coarse aggregate (retained on a 6.3mm sieve) shall consist of crushed stone free from clay, silt, organic matter and other deleterious substances. The aggregate class will be specified in the Special Specification and it shall comply with the requirements given in Table 16B-1(b). The grading for 0/20 mm for carriageway and 0/14mm for shoulders for binder course is as specified below:

Sieve size	0/20	0/14
28	100	-
20	90-100	100
14	75-95	90-100
10	60-82	70-90
6.3	47-68	52-75
4	37-57	40-60
2	25-43	30-45
1	18-32	20-35
0.425	11-22	12-24
0.300	9-17	10-20
0.150	5-12	6-14
0.075	3-7	4-8

TABLE 16B-1(b) - REQUIREMENTS FOR COARSE AGGREGATE

Coarse Aggregate (Retained on a 6.3mm Sieve)	
Test	**Maximum Value**
LAA	30
ACV	25
SSS	12
FI	25

Fine aggregate (passing a 6.3mm sieve) shall be free from clay, silt, organic and other deleterious matter and shall be non-plastic. Unless otherwise specified in the Special Specification it shall consist of entirely crushed rock produced from stone having a Los Angeles Abrasion of not more than 40. The Sand Equivalent of the fine aggregate shall not be less than 40 and the SSS not more than 12.

b) Mineral Filler

Mineral Filler shall consist of ordinary Portland Cement

1603B GRADING REQUIREMENTS

The grading of the mixture of coarse and fine aggregate shall be within and approximately parallel to the grading envelopes given in Table 16B-1(b), for 0/14mm as specified for binder course, as described below.

GRADING REQUIREMENTS

To arrive at a suitable design it is necessary to investigate a number of gradings so that a workable mix, which also retains a minimum of 3 % voids at refusal density, is identified.

The largest particle size used should not be more than 25mm so that the requirements of the Marshall test method can be complied with.

Although the complete range of nominal maximum particle sizes is shown in the Tables, the total thickness of material laid should not be more than 75mm.

1604B REQUIREMENTS FOR ASPHALT CONCRETE TYPE 1

The mixture shall comply with the requirements given in Table 16B-2 as specified in the Specification. In addition, minimum Marshall Stability for 2 x 75 blows shall be 9 kN and maximum 18 kN and at compaction to refusal shall have 3% VIM.
The proportion, by weight of total mixture, of bitumen shall be 5.0 – 6.5 % for 0/14 mm and 4.5 – 6.5 % for 0/20mm. This shall be termed the nominal binder content. The binder content of the working mix will be instructed by the Engineer following laboratory and site trials.

In order to determine the suitability of a coarse aggregate source a Marshall test programme shall be carried out. It will be advantageous to use a crushed rock which is known from past experience to give good results in this test procedure. A grading conforming to the Type I Binder Course detailed in Table 16B-1(a) 0/20 of this Specification should be tested (but with 100% passing the 25mm sieve) and it shall meet the requirements of Table 16B-2 of this Specification.

Having established the suitability of the aggregate source several grading shall be tested in the laboratory, including that used for the Marshall test, to establish relationships between bitumen content and VIM at refusal density. For each mix, samples will be made up to a range of bitumen contents and compacted to refusal using a gyratory compactor and a vibratory hammer in accordance with the procedure described in BS 598 (Part 104 : 1989), with one revision.

It should first be confirmed that compaction on one face of the sample gives the same refusal density as when the same compaction cycle is applied to both faces of the same sample. The procedure, which gives the highest density, must be used.

From the bitumen content-VIM relationship it will be possible to identify a bitumen content which corresponds to a VIM of 3 - 7%. If it is considered that the workability of the mix may be difficult then compaction trials should be undertaken. It is advisable to establish two or more gradings for compaction trials.

The mixes identified for compaction trials should be manufactured to the laboratory design bitumen content and to two other bitumen contents of +0.5% and +1% additional bitumen. Cores will be cut to determine the density of the compacted material, having completed this the core will then be reheated to 145+/-5□C in the appropriate mould and compacted to refusal in the vibrating hammer test. To be acceptable the cores cut from the compaction trial must have a density equivalent to at least 95% of refusal density.

The compaction trials will identify a workable mix which can be made to a bitumen content which gives 3% VIM at refusal density.

1605B MIXING AND LAYING HEAVY DUTY ASPHALT

The temperature of the bitumen and aggregates when mixed shall be 110+/-3□C above the softening point (R&B) of the bitumen.

Compaction should commence as soon as the mix can support the roller without undue displacement of material and completed before the temperature of the mix falls below 90^0C. The minimum thickness of individual layers should be as follows:-

a)	For the 37.5mm mix	65mm
b)	For the 25.0mm mix	60mm
c)	For the 19.0mm mix	50mm
d)	For the 12.5mm mix	40mm

1606B COMPACTION

Rolling shall be continued until the voids measured in the completed layer are in accordance with the requirement for a minimum density of 98% of Marshall optimum, or, a minimum mean value of 95% of refusal density (no value less than 93%) as appropriate.

1607B MEASUREMENT AND PAYMENT

a) Item : Asphalt Concrete

Unit: m^3 of Asphalt Concrete Used

Asphalt concrete shall be measured by the cubic metre compacted on the road calculated as the product of the length instructed to be laid an the compacted cross-sectional area shown on the Drawings or instructed by the Engineer.

The rate for asphalt concrete shall include for the cost of providing, transporting, laying and compacting the mix with the nominal binder content and complying with the requirements of Parts A and B of Section 16 of this Specification.

SECTION 17 - CONCRETE WORKS

1703 MATERIALS FOR CONCRETE

This work shall consist of placing selected approved material of 250mm minimum diameter on the foundation put after excavation to receive levelling concrete in accordance with these specifications and in conformity with the lines, grades and cross sections shown on the Drawings as directed by the Engineer.

(a) Materials

Selected rock: The selected rock boulders to be placed for this work shall be hard, sound, durable quarry stones as approved by the Engineer. Samples of the stone to be used shall be submitted to and approved by the Engineer before any stone is placed.

The maximum size of the stone boulders shall be 300mm.

(b) Construction Method

After completion of the structural excavation the surface of the loose soil shall be levelled and compacted. Then the stone of the above sizes shall be placed in one layer of 250mm over the compacted bed where the bottom slab will rest. Coarse sand shall be spread to fill up the voids in the stone boulders, and compaction with vibratory compactors should be performed to make this layer dense whereon a concrete of levelling course shall be placed.

(c) Measurement and payment

Measurement for the bedding materials shall be made in cubic metres for the completed and accepted work, measured from the dimension shown on the Drawings, unless otherwise directed by the Engineer.

Payment for the bedding Materials for Levelling Concrete Works shall be full compensation for furnishing and placing all materials, all labour equipment, tools and all other items necessary for proper completion of the work in accordance with the Drawings and specifications and as directed by the Engineer.

1703(A) LEVELLING CONCRETE (CLASS 15/20) FOR BOTTOM SLAB INCLUSIVE OF COST OF FORM WORKS

This work shall consist of placing and levelling lean concrete class 15/20 over the prepared bed of stone boulders in the foundation for bottom slab and wingwalls in accordance with these specifications and which conformity with the lines, grades, thickness and typical cross-sections shown on the drawings unless otherwise directed by the Engineer.

(a) Materials for Levelling Concrete

Requirement for the concrete class 15/20 is specified as follows:-

Design compressive strength (28) days : $15N/mm^2$
Maximum size of coarse aggregate : 20mm
Maximum cement content: 300 kg/m^3.
Maximum water/cement ration of 50% with slump of 80mm.

(b) Construction Method

The bed of stone boulders upon which the levelling concrete will be placed shall be smooth, compacted and true to the grades and cross-section shall be set to the required lines and grades.

(c) Measurement and payment

Measurement for levelling concrete (class 15/20) shall be made in cubic metres completed and accepted levelling concrete work measured in place which is done in accordance with the Drawings and the Specifications.

Payment for this work shall be the full compensation for furnishing and placing all materials, labour, equipment and tools, and other incidentals to Specifications and as directed by the Engineer.

Pay item No. 17/02 Levelling Concrete Works (Class 15/20) for Box Culvert and wingwalls inclusive of Cost of Form works.

1703(B) REINFORCING BARS OF WALLS AND SLABS

This work shall consist of furnishing, fabricating and placing in the concrete of the bottom slab, top slab, median wall, sidewalls, wingwalls and aprons, reinforcing bars of the quality, type and size in accordance with these specifications in conformity with the requirements shown on the Drawings.

(a) Material:

Reinforcing bars shall be deformed and shall meet the requirements of British standard BS4461, unless otherwise called for the drawings or approved by the Engineer.

No reinforcing bar shall be delivered without a certificate guaranteeing the yield stress. The 54 reinforcing bar shall be kept off the ground, free from dirt, oil, grease, or avoidable rust and stored within a building or provided with suitable covers.

If it is necessary for the Engineer to ascertain the quality of the reinforcing bars, the Contractor shall test the reinforcing bars, at his own expense, by means as directed by the Engineer.

(b) Construction Method

(i) Bar Bending Schedule:

The Engineer shall provide the Contractor with bending schedule showing the location types, sizes, bending dimensions and cut lengths of the reinforcing bar required to be fixed in the works.

(ii) Cutting and Bending:

Qualified men shall be employed for the cutting and bending, and proper application shall be provided for such work.

Bars shall be cut and bent cold to the dimensions indicated and with equipment and methods approved by the Engineer.

Stirrups and tie bars shall be bent around a pin having a diameter not less than 15 times the minimum diameter of the bar. Bends of other bars, where full tension in the bar may occur, shall be made around a pin having a diameter not less than 7.5 times the bar diameter as shown on the Drawings.

Reinforcing bars shall be accurately formed to the shapes and dimensions indicated on the Drawings, and shall be fabricated in a manner that will not injure the materials.

(c) Placing

Reinforcing bars shall be accurately placed in proper position, and so that they be firmly held during placing of concrete.

Bars shall be tied at all intersections by using annealed iron wire 0.9mm or larger diameter, or suitable clips.

Distances from the forms shall be maintained, corrected by means of metal hangers, metal blocks, metal supports or other supports approved by the Engineer.

The Engineer shall inspect reinforcing bars after placing. When a long time has elapsed after placing reinforcing bars, they shall be cleaned and inspected again by the Engineer before placing concrete.

(d) Splicing and Joint

When it is necessary to splice reinforcing bars at points, position and methods of splicing shall be determined based on strength calculations and approved by the Engineer.

In lapped splices, the bars shall be lapped by the required length, and wired

together at several points by using annealed iron wire larger than 0.9mm.

Exposed reinforcing bars intended for bonding with future extensions shall be effectively protected from injury and corrosion.

Oxyacetylene welding joint of reinforcing steel shall be done only if authorised by the Engineer in writing.

(e) Measurement and Payment

Bending and installation of reinforcing bar of piers and abutments shall be measured in terms of tons. The length of steel bar of each size will be shown on the drawings in which the bar length for splicing is excluded. In computing the weight to be measured, the theoretical weights of bars of the cross-section shown on the Drawings or authorised shall be used.

These weights are given in the following table: -

Bar type and the Cross-section in millimetres	Weight of Bar in Kilogramme—per 12m length of bar
Y10	7.40
Y12	10.66
Y16	18.95
Y20	29.60
Y25	46.30

1703 (C) FORMWORK FOR CULVERT WALLS AND SLABS

This work shall consist of all temporary moulds for forming the concrete for culvert walls and slabs together with all temporary construction required for their support. Unless otherwise directed by the Engineer all formworks shall be removed on completion of the walls and slabs.

(a) Materials

Forms shall be made of wood or metal and shall conform to the shape, lines and dimensions shown on the Drawings.

All timber shall be free from holes, loose material, knots, cracks, splits and warps or other defects affecting the strength or appearance of the finished structure.

Release Agents – Release agents shall be either neat oils containing a surface activating agent, cream emulsions, or chemical agents to be approved by the Engineer.

(b) Construction Method

(b)

(i) Formworks

Formworks shall be designed to carry the maximum loads which may be imposed, and so be rigidly constructed as to prevent deformation due to load, drying and wetting, vibration and other causes. After forms have been set in correct location, they shall be inspected and approved by the Engineer before the concrete is placed.

If requested, the contractor shall submit to the Engineer working drawings of the forms and also, if requested, calculations to certify the rigidity of the forms.

Unless otherwise described in the Contract, all form joints for exposed surfaces of concrete shall form a regular pattern with horizontal and vertical lines continuous throughout each structure and all construction joints shall coincide with these horizontal and vertical lines. PVC pipes of 50mm diameter for weep holes shall be arranged as shown on the Drawings.

Unless otherwise specified, formwork shall be designed to form chamfers at all external corners whether or not such chamfers are shown on the Drawings to prevent cracks and other damage from arising.

The inside surface of forms shall be cleaned and coated with a releasing agent to prevent adhesion of the concrete. Release agents shall be applied strictly in accordance with the manufacturer's detailed instructions. The release agent shall be applied to the formwork prior to erection. Release agent must not come into contact with reinforcement. Immediately before concrete is placed, the forms shall be thoroughly cleaned and freed from sawdust, shavings, dust, mud or other debris by hosing with water. Temporary openings shall be provided in the forms to drain away the water and rubbish.

(i) Scaffolding

All scaffolding required to support the forms shall be designed and constructed to provide necessary rigidity and support the loads without appreciable deflection or deformation.

Details, plans and structural and flexural calculations for scaffolding shall be submitted to the Engineer for approval, but in no case shall the contractor be relieved of his responsibility for the results obtained by use of these plans, etc.

(iii) Removal of formwork

The time at which the formwork is truck shall be the Contractor's responsibility and the forms shall not be removed until the concrete strength has reached 20 N/mm^2.

(c) Measurement and Payment

Formwork shall be measured as the net area, in square metres, in contact with the finished concrete surface of the walls and slabs. No measurement shall be allowed for formwork of temporary construction joints.

Payment for the Formworks shall be full compensation for furnishing, erecting, jointing all the forms for the concrete including furnishing and applying release agent, and construction of the required scaffolding to support the forms, all conforming to the shape, lines, grade and dimensions of the structure as shown on the Drawings, all in accordance with the Drawings and as directed by the Engineer.

1703(D) CONCRETE WORKS (CLASS 25/20) OF CULVERT WALLS AND SLABS

This work shall consist of furnishing, mixing, delivering and placing of the concrete for the construction of culvert walls and slabs, in accordance with these Specifications and in conformity with the requirements shown on the Drawings.

Concrete class 25/20 shall be used for Culvert walls and slabs.

(a) Concrete Materials

(c)

(1) Cement:

Cement shall be of Portland type and shall conform to the requirements of BS 12 or equivalent. The contractor shall select only one type or brand of cement or others. Changing of type or brand of cement will not be permitted without a new mix design approved by the Engineer. All cement is subject to the Engineer's approval, however, approval of cement by the Engineer shall not relieve the Contractor of the responsibility to furnish concrete of the specified compressive strength.

Conveyance of cement by jute bags shall not be permitted. Storage in the Contractor's silo or storehouse shall not exceed more than two (2) months, and age of cement after manufacture at mill shall not exceed more than four (4) months. The Contractor shall submit to the Engineer for his approval the result of quality certificate done prepared by the manufacturer.

Whenever it is found out that cement have been stored too long, moist, or caked, the cement shall be rejected and removed from the project.

(2) Aggregates

Fine and coarse aggregates must be clean, hard, strong and durable, and free from absorbed chemicals, clay coating, or materials in amounts that could affect hydration, bonding, strength and durability of concrete.

Grading of aggregates shall conform to the following requirements:

(i) Grading of Fine Aggregates

	Percentage by Weight Passing
10 mm	100
5 mm	89-100
2.5 mm	60-100
1.2 mm	30-100
0.6 mm	15- 54
0.3 mm	5- 40
0.15 mm	0 – 15

(ii) Grading of Coarse Aggregates

Size of Coarse Aggregate	Amounts finer than each standard sieve percentage by weight							
	40	30	25	20	15	10	5	2.5
	100	-	-	90-100	-	30-69	0-10	-

Other requirements for aggregates are as follows:

(iii) Fine Aggregates

Fitness Modulus, AASHTO M-6 : 2.3 – 3.1
Sodium Sulphate Soundness, AASHTO T104 : Max. 10% loss
Content of Friable Particles AASHTO 112 : Max 1% by weight
Sand Equivalent, AASHTO T176 : Min. 75

(iv) Coarse Aggregate

Abrasion, AASGTO T96 : Max. 405 loss
Soft Fragment and shale, AASHTO M80 : Max. 5% by weight
Thin and elongated Pieces, AASHTO M80 : Max. 15%

(3) Water

All sources of water to be used with cement shall be approved by the Engineer. Water shall be free from injurious quantities of oil, alkali, vegetable matter and salt as determined by the Engineer.

(4) Admixture

Only admixture, which have been tested and approved in the site laboratory through trial mixing for design proportion shall be used.

Before selection of admixture, the Contractor shall submit to the Engineer the specific information or guarantees prepared by the admixture supplier.

The contractor shall not exclude the admixture from concrete proportions.

Concrete class 25/20

Concrete class 25/20 shall be used for culvert wingwalls and slabs. The requirements of Concrete class 25/20 are provided as follows unless otherwise the Engineer will designate any alteration.

Design compressive strength (28 days) : 25N/mm^2
Maximum size of coarse aggregates : 20mm
Maximum water/cement ratio of 45% with slump of 80mm

(d) **Proportioning Concrete**

The Contractor shall consult with the Engineer as to mix proportions at least thirty (30) days prior to beginning the concrete work. The actual mix proportions of cement, aggregates,

water and admixture shall be determined by the Contractor under supervision of the Engineer in the site laboratory.

The Contractor shall prepare the design proportions which has 120% of the strength requirement specified for the designated class of concrete.

No class of concrete shall be prepared or placed until its job-mix proportions have been approved by the Engineer.

(e) **Concrete Work**

(i) Batching

Batching shall be done by weight with accuracy of:

Cement	: ½ percent
Aggregate	: ½ percent
Water and Admixture	: 1 percent.

(d)

Equipment should be capable of measuring quantities within these tolerances for the smartest batch regularly used, as well as for larger batches.

The accuracy of batching equipment should be checked every month in the presence of the Engineer and adjusted when necessary.

(ii) Mixing and delivery

Slump of mixed concrete shall be checked and approved at an accuracy of +25mm against designated slump in these specifications.

(iii) Concrete in hot weather

No concrete shall be placed when the ambient air temperature is expected to exceed thirty three degrees celsius (33^0c) during placement operations).

(iv) Concreting at night

No concrete shall be mixed, placed or finished when natural light is insufficient, unless an adequate approved artificial lighting system is operated, such night work is subject to approval by the engineer.

(v) Placing

In preparation of the placing of concrete, the interior space of forms shall be cleaned and approved by the engineer prior to placing concrete. All temporary members except tie bars to support forms shall be removed entirely from the forms and not buried in the concrete. The use of open and vertical chute shall not be permitted unless otherwise directed by the engineer.
The Contractor shall provide a sufficient number of vibrators to properly compact each batch immediately after it is placed in the forms.

(d) **Measurement and Payment**

Measurements for the Concrete Works Class 25/20 of culvert walls and slabs shall be made in cubic metres for the walls and slabs actually constructed, measured from their dimensions shown on the Drawings. Payment for the Concrete Works (Class 25/20) of culvert walls and slabs shall be the full compensation for furnishing all materials of the concrete mixing, delivering, placing and curing the concrete, equipment and tools, labour and other incidental necessary for the completion of the work in accordance with the Drawings and these Specifications and as directed by the Engineer.

SECTION 20 - ROAD FURNITURE

2004 PERMANENT ROAD SIGNS

Permanent Road Signs shall be provided as directed by the Engineer and in compliance with the requirements of the "Manual for Traffic Signs in Kenya" Part II and Standard Specification clause 2004.

2004B EXISTING ROAD SIGNS

Where directed by the Engineer, the Contractor shall take down road signs including all posts, nuts, bolts and fittings, and remove and dispose of the concrete foundation and backfill the postholes. The signs shall be stored at the Contractor's store and they shall become the property of the Employer who shall remove them prior to the expiry of the maintenance period.

Measurement and payment for taking down road signs shall be made by the number of signs of any type and size taken down, cleaned and stored as directed.

Where a salvaged existing sign complies with the requirements of new road signs, the Engineer may instruct the Contractor to remove the sign for safe storage, and re-erect it.

Measurement and payment shall be made by the number of road signs re-erected as directed and the rate shall include for excavation, concrete foundations and backfilling around posts and removal of surplus material to spoil.

2006 GUARDRAILS AND HANDRAILS

Contrary to the Standard Specification, guardrail posts shall be concrete 200mm diameter set vertically at least 1.2m into the shoulder as directed by the Engineer. Spacer blocks shall also be made of concrete.

Beams for guardrails shall be "Armco Flexbeam" or similar obtained from a manufacturer approved by the Engineer.

Handrails, steel bolts and nuts shall be provided on all bridges.

SECTION VII - DRAWINGS

Note: A list of drawings should be inserted here. The actual drawings including Site plans should be annexed in a separate booklet.

FIGURE C.1-CROSS SECTION A (MINOR STANDARD CROSS-SECTION)

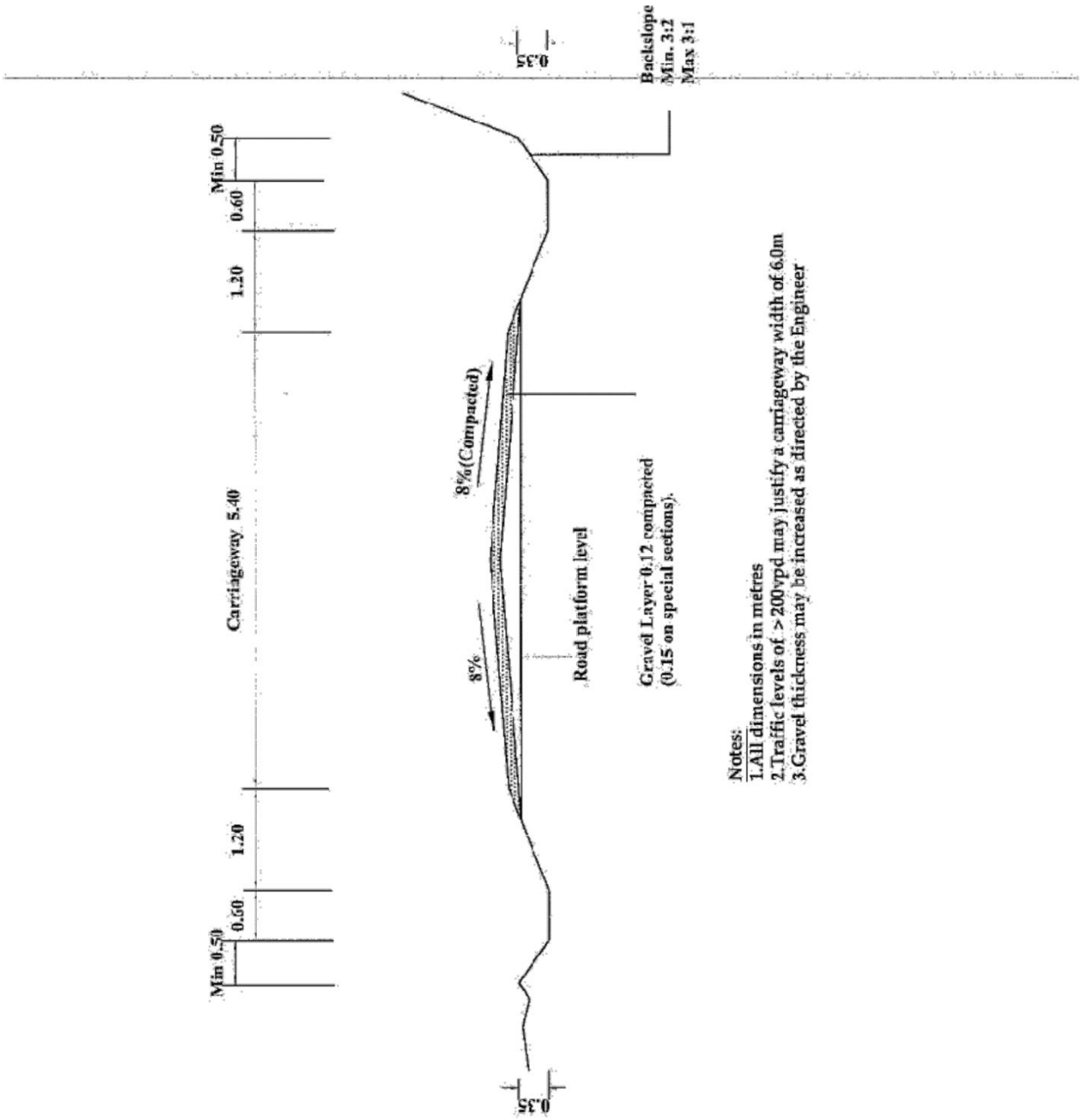

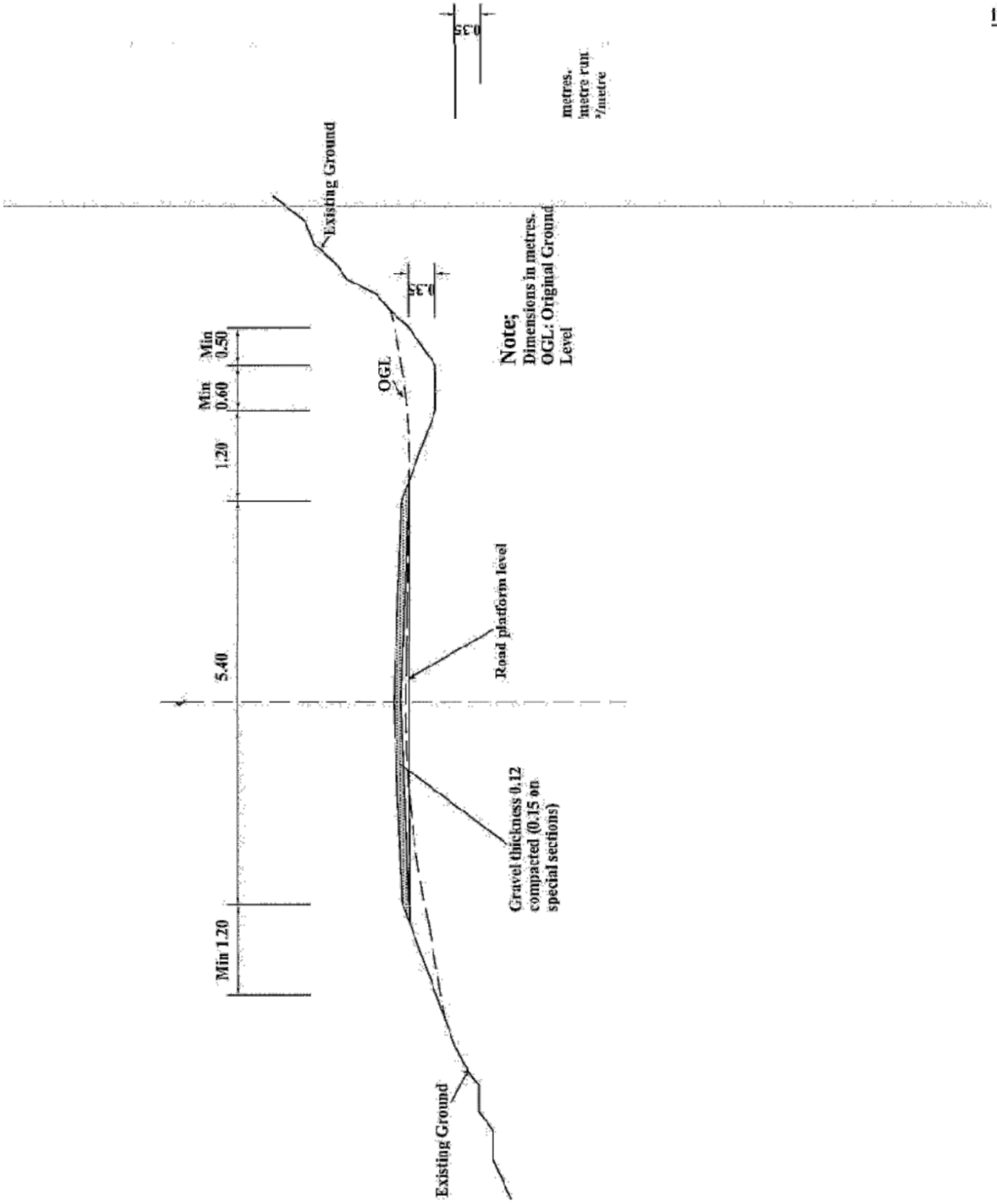
0.35
metres.
'metre run
'/metre
Existing Ground
0.35
Note;
Dimensions in metres.
OGL: Original Ground Level
Min 0.50
Min 0.60
1.20
OGL
5.40
Road platform level
Gravel thickness 0.12 compacted (0.15 on special sections)
Min 1.20
Existing Ground

FIGURE C5- STANDARD CROSS- SECTION (SUPERELEVATION)

FIGURE C9b- CONCRETE SCOUR CHECKS

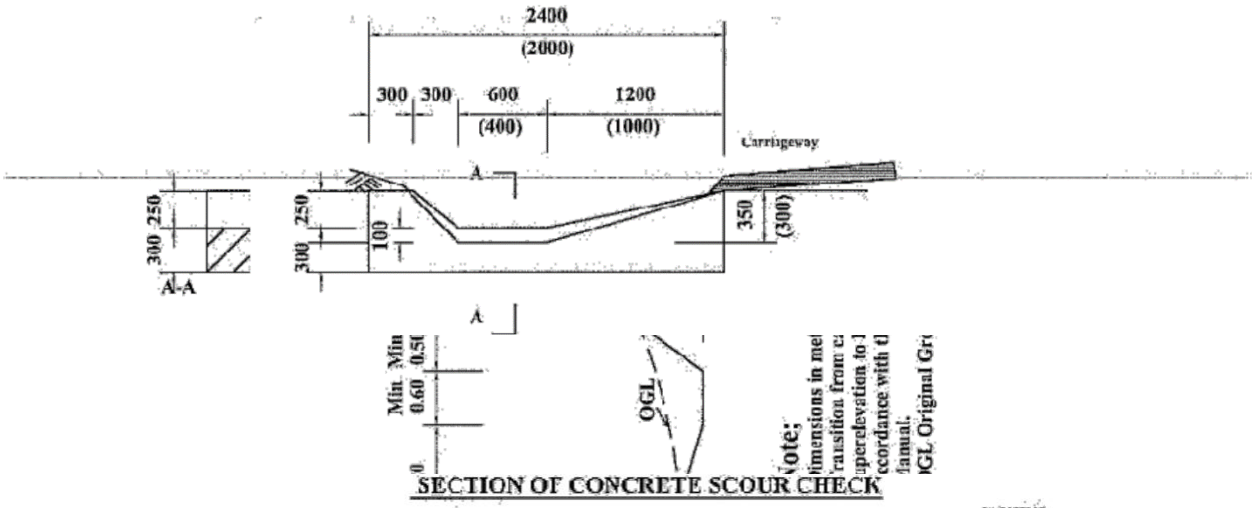

SECTION OF CONCRETE SCOUR CHECK

NOTE
1.Dimensions in mm

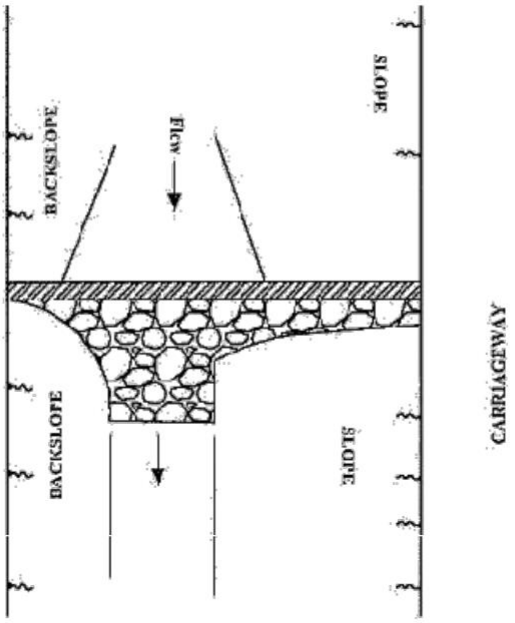

PLAN OF DRAIN WITH SCOUR CHECK

Cross-Section	Sizes in mm			Excav (m3)	Concrete (m3)	Apron stone pitching (m3)
	Length	Width	Depth			
A	2400	100	550	0.13	0.15	0.18
B	2000	100	500	0.10	0.09	0.14

FIGURE C10- CULVERT ENTRY/EXIT STRUCTURE TYPES

FIGURE C11- HEADWALL TYPE 1 (HEAD AND WINGWALLS)

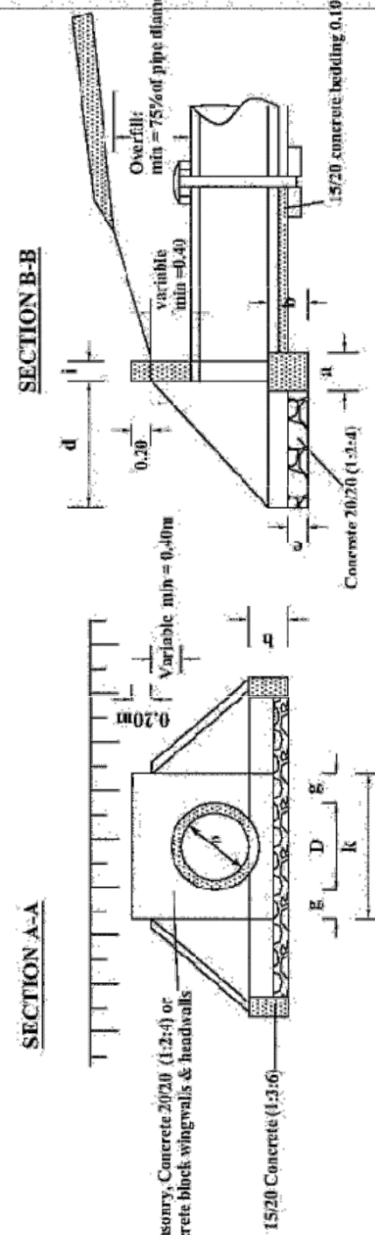

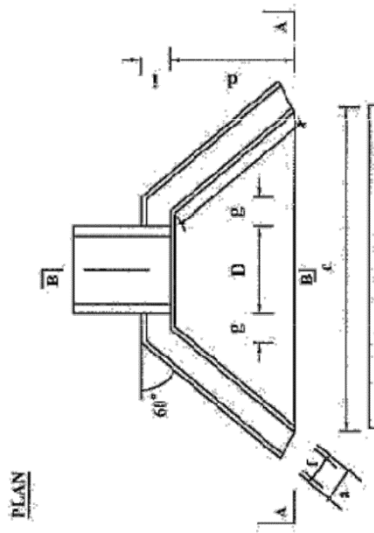

PIPE DIAMETER IN M		TYPE A and C CONCRETE BLOCKS			TYPE B (STONE MASONRY)		
		450	600	900	450	600	900
DIMENSION	UNIT						
a FOUNDATION	m	0.30	0.30	0.30	0.40	0.40	0.60
b FOUNDATION	m	0.30	0.30	0.40	0.30	0.30	0.40
c FOUNDATION	m	2.20	2.35	2.89	2.20	2.35	2.89
d APRON	m	1.00	1.00	1.20	1.00	1.00	1.20
e APRON	m	0.20	0.20	0.20	0.20	0.20	0.20
f WALL	m	0.20	0.20	0.20	0.40	0.40	0.40
g WALL	m	0.30	0.30	0.30	0.30	0.30	0.30
h WALL	m	1.15	1.15	1.39	1.15	1.15	1.39
i WALL	m	0.20	0.20	0.20	0.40	0.40	0.40
k APRON	m	1.05	1.20	1.50	1.05	1.20	1.50
MATERIAL REQUIREMENT							
FOUNDATION (concrete)	m3	0.30	0.32	0.51	0.40	0.42	1.03
HEAD/WINGWALLS (Conrete/Masonry)	m3	0.42	0.49	0.70	0.84	0.96	1.40
APRON (concrete)	m3	0.33	0.36	0.53	0.33	0.36	0.53

CULVERT TYPES	
X-SECTION WIDTH m	No. of pipes
4.50	6
5.50	7
6.50	8

FIGURE C.13-HEADWALL TYPE 3A (CONCRETE/ BLOCK HEADWALLS

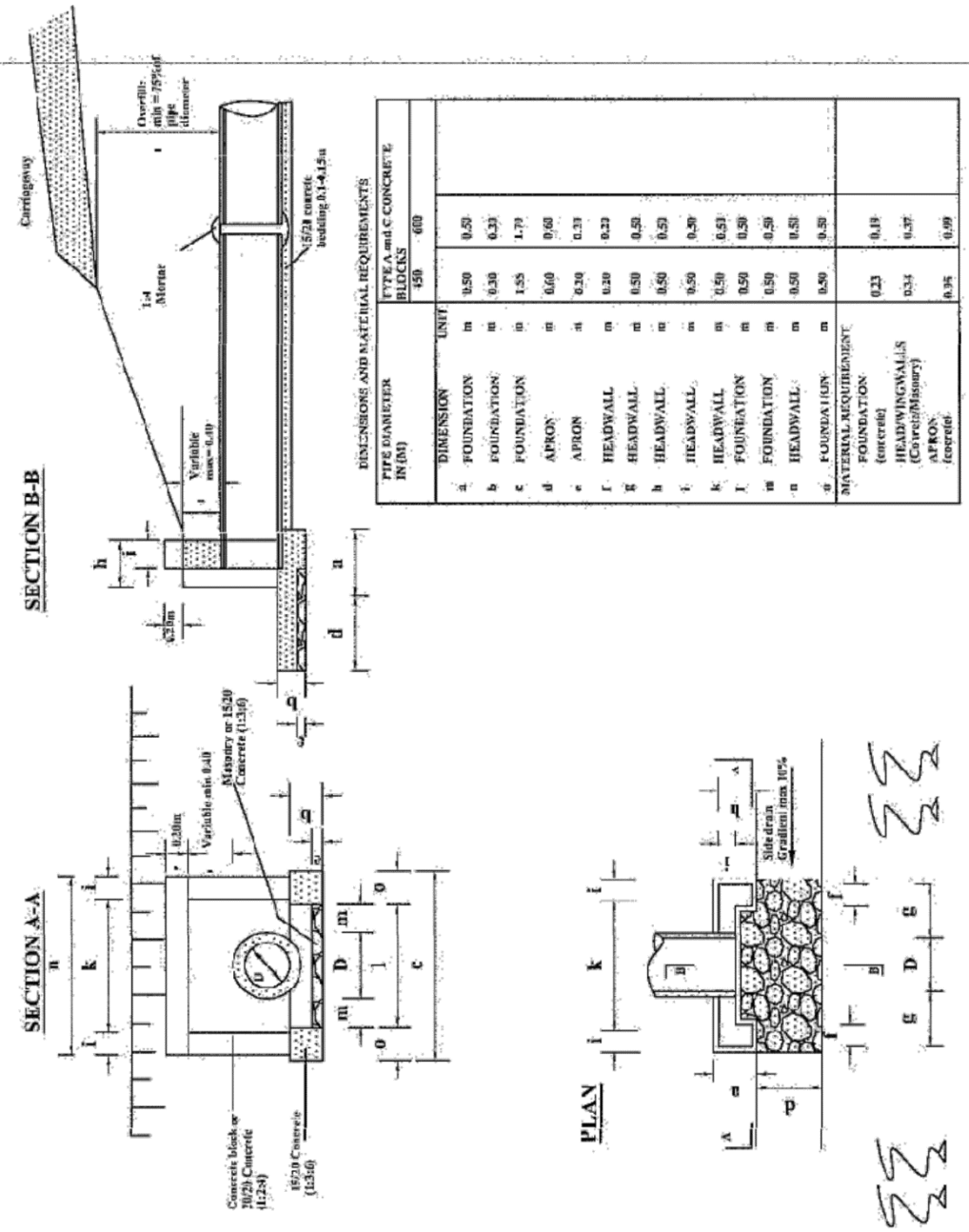

DIMENSIONS AND MATERIAL REQUIREMENTS

PIPE DIAMETER IN (M)			TYPE A and C CONCRETE BLOCKS	
	DIMENSION	UNIT	450	600
a	FOUNDATION	m	0.50	0.50
b	FOUNDATION	m	0.30	0.33
c	FOUNDATION	m	1.55	1.73
d	APRON	m	0.60	0.60
e	APRON	m	0.30	0.33
f	HEADWALL	m	0.30	0.33
g	HEADWALL	m	0.50	0.53
h	HEADWALL	m	0.50	0.53
i	HEADWALL	m	0.50	0.50
k	HEADWALL	m	0.50	0.53
l	FOUNDATION	m	0.50	0.50
m	FOUNDATION	m	0.50	0.50
n	HEADWALL	m	0.50	0.53
o	FOUNDATION	m	0.50	0.50
MATERIAL REQUIREMENT				
	FOUNDATION (concrete)		0.23	0.33
	HEADWINGWALLS (Concrete/Masonry)		0.34	0.37
	APRON (concrete)		0.35	0.99

FIGURE C15-HEADWALL TYPE 4(FOR ACCESS CULVERTS)

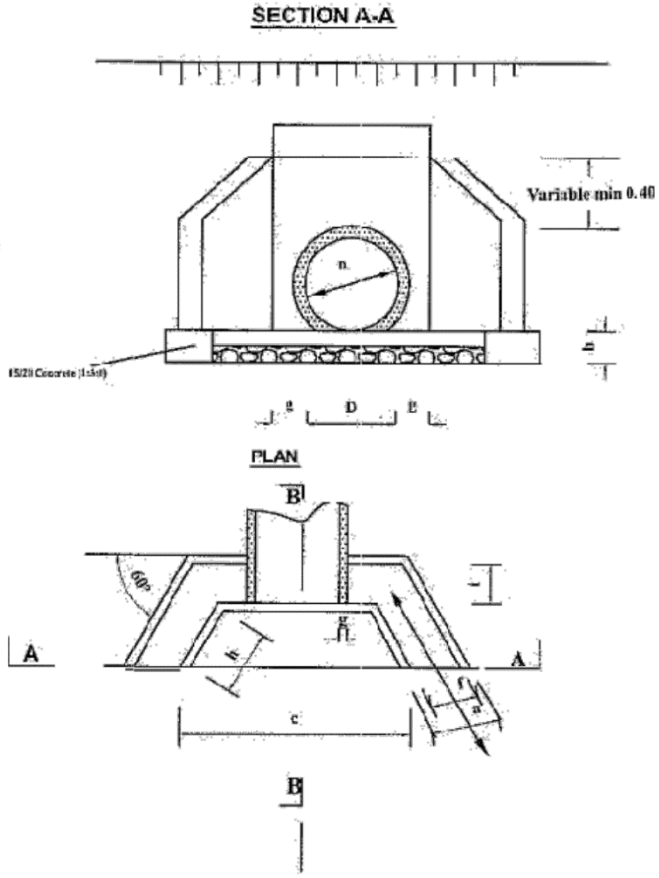

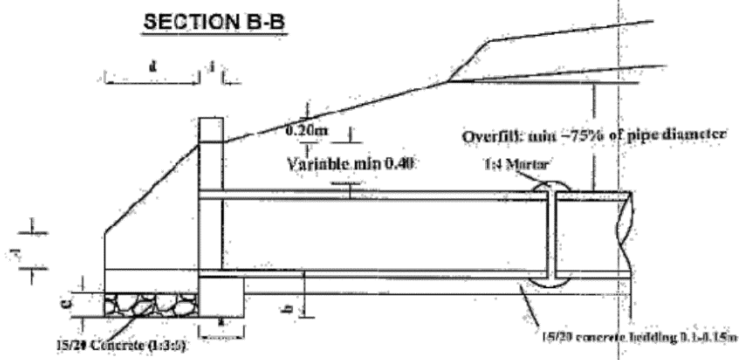

DIMENSIONS AND MATERIAL REQUIREMENTS

	PIPE DIAMETER IN (M)		TYPE A (CONCRETE BLOCKS)			TYPE B (STONE MASONRY)		
			450	600	900	450	600	900
	DIMENSION	UNIT						
a	FOUNDATION	m	0.30	0.30		0.40	0.40	
b	FOUNDATION	m	0.30	0.30		0.30	0.30	
c	APRON	m	1.34	1.49		1.34	1.49	
d	APRON	m	0.60	0.50		0.60	0.60	
e	APRON	m	0.20	0.20		0.20	0.20	
f	WINGWALLS	m	0.20	0.20		0.40	0.40	
g	WINGWALLS	m	0.10	0.10		0.10	0.10	
h	HEADWALLS	m	0.69	0.69		0.69	0.69	
i	HEADWALLS	m	0.20	0.20		0.40	0.40	
k	HEADWALLS	m	0.65	0.80		0.65	0.80	
l	HEADWALLS	m	0.40	0.40		0.40	0.40	
MATERIAL REQUIREMENT								
	FOUNDATION (concrete 1:2:4:1:3:6)		0.18	0.20		0.24	0.26	
	HEAD/WINGWALLS (Concrete/Masonry)		0.28	0.32		0.53	0.61	
	APRON (concrete)		0.12	0.14		0.12	0.14	

FIGURE C17-BEDDING AND SURROUND PROFILE TYPES III &IV

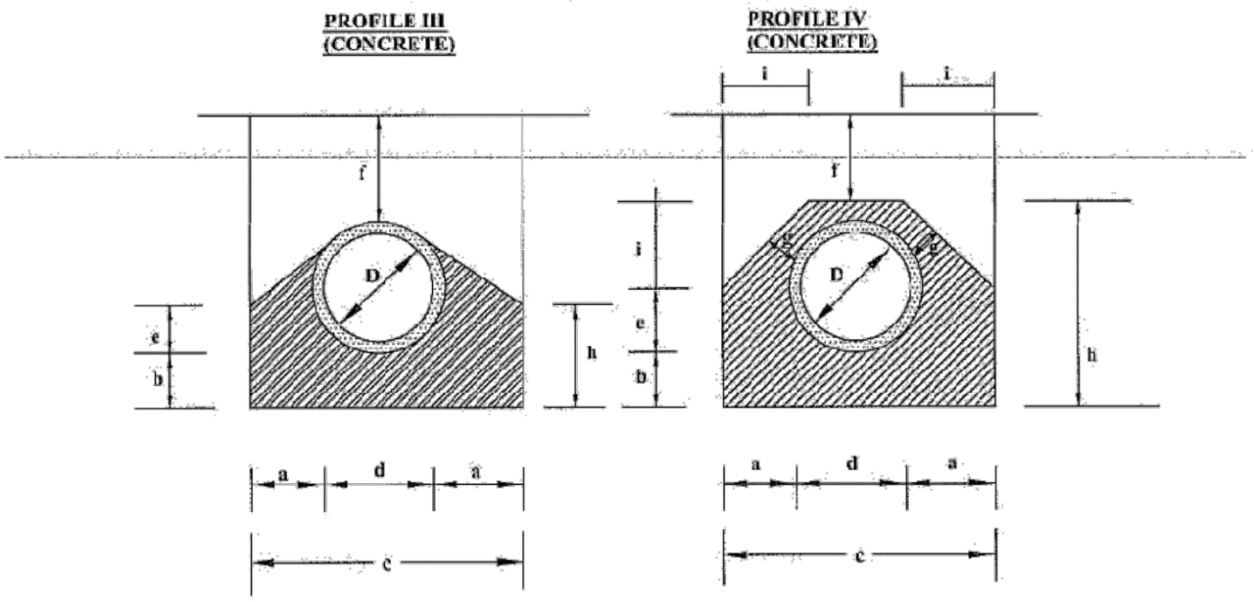

Diameter (D)	450 (mm)	600 (mm)	900 (mm)
a	0.15	0.20	0.20
b	0.10	0.15	0.15
c	0.86	1.12	1.48
d	0.56	0.72	1.08
e	0.42	0.54	0.81
f(min)	0.23	0.3	0.45
g	-	-	-
h	0.52	0.69	0.96
i	-	-	-
Concrete	Volume in (m3/m)		
Class 15/20	0.26	0.47	0.71
Application	-Fair subgrade condition -Overfill > 75% of the pipe diameter -Seasonal water flow only		
Remarks	Material for back/overfill shall be approved by the Engineer		

450 (mm)	600 (mm)	900 (mm)
0.15	0.20	0.20
0.10	0.15	0.15
0.86	1.12	1.48
0.56	0.72	1.08
0.46	0.52	0.78
0.15	0.15	0.15
0.15	0.15	0.15
0.81	1.02	1.38
0.28	0.35	0.45
Volume in (m3/m)		
0.37	0.61	0.92
-Fair to poor subgrade condition -Overfill > 75% of the pipe diameter -Seasonal water flow only		
Material for back/overfill shall be approved by the Engineer		

STANDARD PROJECT SIGN BOARD

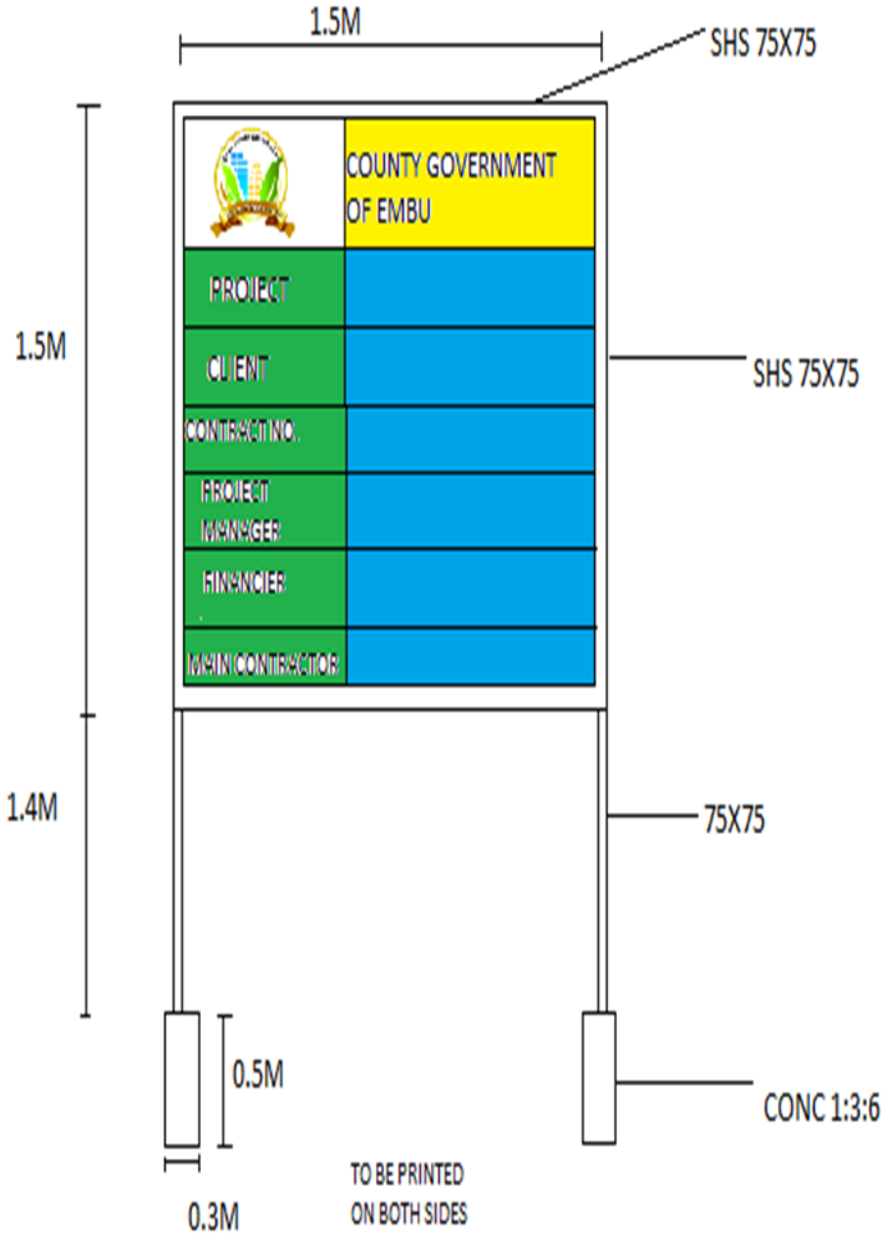

Wording of the sign board shall be as directed by the Engineer

SUPPLEMENTARY INFORMATION

PART 3 – CONDITIONS OF CONTRACT AND CONTRACT FORMS

Section VIII - General Conditions of Contract 1.

GENERAL CONDITIONS

GENERAL CONDITIONS

1. General Provisions

1. Definitions

1.1 In this Contract, except where context otherwise requires, the following terms shall be interpreted as indicated;

"Bills of Quantities" means the priced and completed Bill of Quantities forming part of the tender[where applicable].

"Schedule of Rates" means the priced Schedule of Rates forming part of the tender [where applicable].

"The Completion Date" means the date of completion of the Works as certified by the Employer's Representative.

"The Contract" means the agreement entered into by the Employer and the Contractor as recorded in the Agreement Form and signed by the parties.

"The Contractor" refers to the person or corporate body whose tender to carry out the Works has been accepted by the Employer.

"The Contractor's Tender" is the completed tendering document submitted by the Contractor to the Employer.

"The Contract Price" is the price stated in the Letter of Acceptance.

"Days" are calendar days; "Months" are calendar months.

"A Defect" is any part of the Works not completed in accordance with the Contract.

"The Defects Liability Certificate" is the certificate issued by Employer's Representative upon correction of defects by the Contractor.

"The Defects Liability Period" is the period named in the Appendix to Conditions of Contract and calculated from the Completion Date.

"Drawings" include calculations and other information provided or approved by the Employer's Representative for the execution of the Contract.

"Employer" is Embu County Government

"Equipment" is the Contractor's machinery and vehicles brought temporarily to the Site for the execution of the Works.

"Site" means the place or places where the permanent Works are to be carried out including workshops where the same is being prepared.

"Materials" are all supplies, including consumables, used by the Contractor for incorporation in the Works.

"Employer's Representative" is the person appointed by the Employer and notified to the Contractor for the purpose of supervision of the Works.

"Specification" means the Specification of the Works included in the Contract.

"Start Date" is the date when the Contractor shall commence execution of the Works.

" A Subcontractor" is a person or corporate body who has a Contract with the Contractor to carry out a part of the Work in the Contract, which includes Work on the Site.

"Temporary works" are works designed, constructed, installed, and removed by the Contractor which are needed for construction or installation of the Works.

" A Variation" is an instruction given by the Employer's Representative which varies the Works.

"The Works" are what the Contract requires the Contractor to construct, install, and turnover to the Employer.

2. Contract Documents

2.1 The following documents shall constitute the Contract documents and shall be interpreted in the following order of priority;

(1) Agreement,
(2) Letter of Acceptance,
(3) Contractor's Tender,
(4) Conditions of Contract,
(5) Specifications,
(6) Drawings,
(7) Bills of Quantities or Schedule of Rates [whichever is applicable)

3. Employer's Representative's Decisions

3.1 Except where otherwise specifically stated, the Employer's Representative will decide contractual matters between the Employer and the Contractor in the role representing the Employer.

4. Works, Language and Law of Contract

4.1 The Contractor shall construct and install the Works in accordance with the Contract documents. The Works may commence on the Start Date and shall be carried out in accordance with the Program submitted by the Contractor, as updated with the approval of the Employer's Representative, and complete them by the Intended Completion Date.

4.2 The ruling language of the Contract shall be English language and the law governing the Contract shall be the law of the Republic of Kenya.

5. Safety, Temporary works and Discoveries

5.1 The Contractor shall be responsible for design of temporary works and shall obtain approval of third parties to the design of the temporary works where required.

5.2 The Contractor shall be responsible for the safety of all activities on the Site.

5.3 Anyt hing of historical or other interest or significant value unexpectedly discovered on

the Site shall be the property of the Employer. The Contractor shall notify the Employer's Representative of such discoveries and carry out the Employer's Representative's instructions for dealing with them.

6 STAFF AND LABOR

6.1 Engagement of Staff and Labor

Except as otherwise stated in the Specification, the Contractor shall make arrangements for the engagement of all staff and labor, local or otherwise, and for their payment, feeding, transport, and, when appropriate, housing. The Contractor is encouraged, to the extent practicable and reasonable, to employ staff and labor with appropriate qualifications and experience from sources within the Country.

6.2 Rates of Wages and Conditions of Labor

6.2.1 The Contractor shall pay rates of wages, and observe conditions of labor, which are not lower than those established for the trade or industry where the work is carried out. If no established rates or conditions are applicable, the Contractor shall pay rates of wages and observe conditions which are not lower than the general level of wages and conditions observed locally by Procuring Entity's whose trade or industry is similar to that of the Contractor.

6.2.2 The Contractor shall inform the Contractor's Personnel about their liability to pay personal income taxes in Kenya in respect of such of their salaries, wages, allowances and any benefits as are subject to tax under the Laws of Kenya for the time being in force, and the Contractor shall perform such duties in regard to such deductions there of as may be imposed on him by such Laws.

6.3 Persons in the Service of Procuring Entity

The Contractor shall not recruit, or attempt to recruit, staff and labor from amongst the Procuring Entity's Personnel.

6.4 Labor Laws

6.4.1 The Contractor shall comply with all the relevant labor Laws applicable to the Contractor's Personnel, including Laws relating to their employment, health, safety, welfare, immigration and emigration, and shall allow them all their legal rights.

6.4.2 The Contractor shall require his employees to obey all applicable Laws, including those concerning safety at work.

6.5 Working Hours

No work shall be carried out on the Site on locally recognized days of rest, or outside the normal working hours stated in the SCC, unless:

a) Otherwise stated in the Contract,

b) The Engineer gives consent, or

c) The work is unavoidable, or necessary for the protection of life or property or for the safety of the Works, in which case the Contractor shall immediately advise the Engineer.

6.6 Facilities for Staff and Labor

6.6.1 Except as otherwise stated in the Specification, the Contractor shall provide and maintain all necessary accommodation and welfare facilities for the Contractor's Personnel. The Contractor shall also

provide facilities for the Procuring Entity's Personnel as stated in the Specification.

6.6.2 The Contractor shall not permit any of the Contractor's Personnel to maintain any temporary or permanent living quarters within the structures forming part of the Permanent Works.

6.7 Health and Safety

6.7.1 The Contractor shall at all times take all reasonable precautions to maintain the health and safety of the Contractor's Personnel. In collaboration with local health authorities, the Contractor shall ensure thatmedical staff, first aid facilities, sick bay and ambulance service are available at all times at the Site and at any accommodation for Contractor's and Procuring Entity's Personnel, and that suitable arrangements are made for all necessary welfare and hygiene requirements and for the prevention of epidemics.

6.7.2 The Contractor shall appoint an accident prevention officer at the Site, responsible for maintaining safety and protection against accidents. This person shall be qualified for this responsibility and shall have the authority to issue instructions and take protective measures to prevent accidents. Throughout the execution of the Works, the Contractor shall provide whatever is required by this person to exercise this responsibility and authority.

6.7.3 The Contractor shall send, to the Engineer, details of any accident as soon as practicable after its occurrence. The Contractor shall maintain records and make reports concerning health, safety and welfare of persons, and damage to property, as the Engineer may reasonably require.

6.7.4 HIV-AIDS Prevention. The Contractor shall conduct an HIV-AIDS awareness programme via an approved service provider and shall undertake such other measures as are specified in this Contract to reduce the risk of the transfer of the HIV virus between and among the Contractor's Personnel and the local community, to promote early diagnosis and to assist affected individuals.

7 Performance Bond

6.1 The Performance Security shall be issued by a Bank incorporated in Kenya. The amount of guarantee shall be as stated in the Appendix to Form of Tender.

6.2 The performance security may, subject to the approval of the Engineer, be adjusted at the end of each period of 12 months to reflect the residual value of the Contract Works.

6.3 The Performance Bond shall be valid until the date of issue of the Employer's notice under sub-Clause 8.2 (Taking over Notice). The Employer shall return the Bond to the Contractor within 14 days thereafter.

8 Work Program and Sub-contracting

8.1 Within seven days after Site possession date, the Contractor shall submit to the Employer's Representative for approval a program showing the general methods, arrangements, order and timing for all the activities in the Works.

8.2 This detailed program shall be based upon the program submitted by the Contractor as part of his bid, where this was required, and shall in no material manner deviate from the said program.

8.3 The program shall be coordinated with climatic, groundwater and other conditions to provide for completion of the works in the order and by the time specified.

8.4 The various operations pertaining to the works shall be carried out in such a progressive

sequence as will achieve a continuous and consecutive output of fully completed roadworks inclusive of all bridge works and culverts within the time limits specified in the Contract. Generally the Contractor shall start at one end of the road and progress continuously towards the other without leaving any isolated section or sections of uncompleted road provided always that the site of the works has been acquired in its entirety and the encumbrances and services thereon removed.

8.5 The Contractor shall allow in his programme for the following public holidays per calendar year during which the Contractor shall not be permitted to work.
New Year"s Day (1st January)
Good Friday
Easter Monday
Labour day (1st May)
Madaraka Day (1st June)
Idd Ul Fitr (To be gazetted)
Mashujaa Day (20th October)
Jamhuri day (12th December)
Christmas Day (25th December)
Boxing day (26th December)

8.6 The Contractor shall also allow per calendar year for a further two unspecified public holidays, which may be announced by the Government of Kenya with no prior notification upon which he shall not be permitted to work.

8.7 The Employer shall have the right to withhold payment at any time if the Contractor fails to submit the Contractual Construction Programme or revised construction programmes due to his negligence, failure or omission.

8.8 The Contractor may sub-contract the Works (but only to a maximum of 25 percent of the Contract Price) with the approval of the Employer's Representative. However, he shall not assign the Contract without the approval of the Employer in writing. Sub-contracting shall not alter the Contractor's obligations.

9 The site

9.1 The Employer shall give possession of all parts of the Site to the Contractor. The Contractor shall allow the Employer's Representative and any other person authorized by the Employer's Representative ,access to the Site and to any place where work in connection with the Contract is being carried out or is intended to be carried out.

10 Instructions

10.1 The Contractor shall carry out all instructions of the Employer's Representative which are in accordance with the Contract.

11 Extension of Completion Date

11.1 The Employer's Representative shall extend the Completion Date if an occurrence arises which makes it impossible for completion to be achieved by the Intended Completion Date. The Employer's Representative shall decide whether and by how much to extend the Completion Date.

11.2 For the purposes of this clause, the following occurrences shall be valid for consideration;

Delay by:-

(a) force majeure, or

(b) reason of any exceptionally adverse weather conditions, or

(c) reason of civil commotion, strike or lockout affecting any of the trades employed upon the Works or any of the trades engaged in the preparation, manufacture or transportation of any of the goods or materials required for the Works, or

(d) reason of the Employer's Representative's instructions issued under these Conditions, or

(e) reason of the contractor not having received in due time necessary instructions, drawings, details or levels from the Employer's Representative for which he specifically applied in writing on a date which having regard to the date for Completion stated in the appendix to these Conditions or to any extension of time then fixed under this clause was neither unreasonably distant from nor unreasonably close to the date on which it was necessary for him to receive the same, or

(f) delay on the part of artists, tradesmen or others engaged by the Employer in executing work not forming part of this Contract, or

(g) reason of delay by statutory or other services providers or similar bodies engaged directly by the Employer, or

(h) reason of opening up for inspection of any Work covered up or of the testing or any of the Work, materials or goods in accordance with these conditions unless the inspection or test showed that the Work, materials or goods were not in accordance with this Contract, or

(i) reason of delay in appointing a replacement Employer's Representative, or

(j) reason of delay caused by the late supply of goods or materials or in executing Work for which the Employer or his agents are contractually obliged to supply or to execute as the case may be, or

(k) delay in receiving possession of or access to the Site.

12 Management Meetings

12.1 A Contract management meeting shall be held regularly and attended by the Employer's Representative and the Contractor. Its business shall be to review the plans for the remaining Work. The Employer's Representative shall record the business of management meetings and provide copies of the record to those attending the meeting and the Employer. The responsibility of the parties for actions to be taken shall be decided by the Employer's Representative either at the management meeting or after the management meeting and stated in writing to all who attend the meeting.

12.2 Communication between parties shall be effective only when in writing.

13 Defects

13.1 The Employer's Representative shall inspect the Contractor's work and notify the Contractor of any defects that are found. Such inspection shall not affect the Contractor's responsibilities. The Employer's Representative may instruct the Contractor to search for a defect and to uncover and test any Work that the Employer's Representative considers

may have a defect. Should the defect be found, the cost of uncovering and making good shall be borne by the Contractor. However if there is no defect found, the cost of uncovering and making good shall be treated as a variation and added to the Contract Price.

13.2 The Employer's Representative shall give notice to the Contractor of any defects before the end of the Defects Liability Period, which begins at Completion, and is defined in the Appendix to Conditions of Contract.

13.3 Every time notice of a defect is given, the Contractor shall correct the notified defect within the length of time specified by the Employer's Representative's notice. If the Contractor has not corrected a defect within the time specified in the Employer's Representative's notice, the Employer's Representative will assess the cost of having the defect corrected by other parties and such cost shall be treated as a variation and be deducted from the Contract Price.

14 Bills of Quantities/Schedule of Rates

14.1 The Bills of Quantities/Schedule of Rates shall contain items for the construction, installation, testing and commissioning of the Work to be done by the Contractor. The Contractor will be paid for the quantity of the Work done at the rates in the Bills of Quantities/Schedule of Rates for each item. Items against which no rate is entered by the Tenderer will not be paid for when executed and shall be deemed covered by the rates for other items in the Bills of Quantities/Schedule of Rates.

14.2 Where Bills of Quantities do not form part of the Contract, the Contract Price shall be a lump sum (which shall be deemed to have been based on the rates in the Schedule of Rates forming part of the tender) and shall be subject to re-measurement after each stage.

15 Variations

15.1 The Contractor shall provide the Employer's Representative with a quotation for carrying out the variations when requested to do so. The Employer's Representative shall assess the quotation and shall obtain the necessary authority from the Employer before the variation is ordered.

15.2 If the Work in the variation corresponds with an item description in the Bill of Quantities/Schedule of Rates, the rate in the Bill of Quantities/Schedule of Rates shall be used to calculate the value of the variation. If the nature of the Work in the variation does not correspond with items in the Bill of Quantities/Schedule of Rates, the quotation by the Contractor shall be in the form of new rates for the relevant items of Work.

15.3 If the Contractor's quotation is unreasonable, the Employer's Representative may order the variation and make a change to the Contract Price, which shall be based on the Employer's Representative's own forecast of the effects of the variation on the Contractor's costs.

16 Payment Certificates and Final Account

16.1 The Contractor shall be paid after each of the following stages of Work listed herebelow (subject to re-measurement by the Employer's Representative of the Work done in each stage before payment is made). In case of lump-sum Contracts, the valuation for each stage shall be based on the quantities so obtained in the re-measurement and the rates in the Schedule of Rates.

(i) Advance payment

(*percent of Contract Price,*
[after Contract execution]*to be inserted by the Employer).*

(ii) First stage (*define stage)*

(iii) Second stage *(define stage*)

(iv) Third stage (*define stage)*

(v) After defects liability period .

16.2 Upon deciding that Works included in a particular stage are complete, the Contractor shall submit to the Employer's Representative his application for payment. The Employer's Representative shall check, adjust if necessary and certify the amount to be paid to the Contractor within 21 days of receipt of the Contractor's application .The Employer shall pay the Contractor the amounts so certified within 90 days of the date of issue of each Interim Certificate.

16.3 Within 21 days after receipt of the Interim Payment Certificate and subject to the Contractor having made such further amendments and corrections as the Engineer may require, the Engineer will forward to the Employer the certified Interim Payment Certificate.

16.4 Provided that the Engineer shall not be bound to certify any payment under this Clause if the net amount thereof, after all retentions and deductions, would be less than the minimum amount of Interim Payment Certificate's stated in the Appendix to form of Bid. However, in such a case, the uncertified amount will be added to the next interim payment, and the cumulative unpaid certified amount will be compared to the minimum amount of interim payment.

16.5 The Engineer may in any Interim Payment Certificate make any correction or modification to any previous Interim Payment Certificate signed by him and shall have authority, if any work is not being carried out to his satisfaction to omit or reduce the value of such work in any Interim Payment Certificate.

16.6 The Contractor shall supply the Employer's Representative with a detailed final account of the total amount that the Contractor considers payable under the Contract before the end of the Defects Liability Period. The Employer's Representative shall issue a Defect Liability Certificate and certify any final payment that is due to the Contractor within 30 days of receiving the Contractor's account if it is correct and complete. If it is not, the Employer's Representative shall issue within 21 days a schedule that states the scope of the corrections or additions that are necessary. If the final account is still unsatisfactory after it has been resubmitted, the Employer's Representative shall decide on the amount payable to the Contractor and issue a Final Payment Certificate. The Employer shall pay the Contractor the amount so certified within 60 days of the issue of the Final Payment Certificate.

16.7 If the period laid down for payment to the Contractor upon each of the Employer's Representative's Certificate by the Employer has been exceeded, the Contractor shall be entitled to claim simple interest calculated pro-rata on the basis of the number of days delayed at the

Central Bank of Kenya's average base lending rate prevailing on the first day the payment becomes overdue. The Contractor will be required to notify the Employer within 15 days of receipt of delayed payments of his intentions to claim interest.

15.8 MATERIALS FOR PERMANENT WORKS

With respect to materials brought by the Contractor to the site for incorporation into the permanent works, the Contractor shall, Receive a credit in the month, in which these materials are brought to site, Be charged a debit in the month in which these materials are incorporated in the permanent works.

Both such credit and debit to be determined by the Engineer in accordance with the following provisions.

(a) No credit shall be given unless the following conditions shall have been met to the Engineer's satisfaction

(i) The materials are in accordance with the specifications for the works, manufacturer's test certificates must be submitted;

(ii) The materials have been delivered to site and are properly stored and protected against loss, damage or deterioration;

(iii) The Contractors record of the requirements, orders receipts and use of materials are kept in a form approved by the Engineer, and such records are available for inspection by the Engineer;

(iv) The Contractor has submitted a statement of his cost of acquiring and delivering the materials to the site, together with such documents as may be required for the purpose of evidencing such cost;

(v) The materials are to be used within a reasonable time.

(b) The amount to be credited to the Contractor shall not be more than 75% of the Contractor's reasonable cost of the materials delivered to site, as determined by the Engineer after ascertain requirements of subparagraphs (a) above;

(c) The amount to be debited to the Contractor for any materials incorporated into the works shall be equivalent to the credit previously granted to the Contractor for such materials pursuant to Clause (b) above as determined by the Engineer.

15. Insurance

15.1 The Contractor shall be responsible for and shall take out appropriate cover against, among other risks, personal injury; loss of or damage to the Works, materials and plant; and loss of or damage to property.

16. Liquidated Damages

16.1 The Contractor shall pay liquidated damages to the Employer at the rate 0.001 per cent of the Contract price per day for each day that the actual Completion Date is later than the Intended Completion Date except in the case of any of the occurrences listed under clause 9.2. The Employer may deduct liquidated damages from payments due to the Contractor. Payment of liquidated damages shall not affect the Contractor's liabilities.

17. Completion and Taking Over

17.1 Upon deciding that the Work is complete the Contractor shall request the Employer's Representative to issue a Certificate of Completion of the Works, upon deciding that the Work is completed.

The Employer shall take over the Site and the Works within seven days of the Employer's Representative issuing a Certificate of Completion.

18. Termination

18.1 The Employer or the Contractor may terminate the Contract if the other party causes a fundamental breach of the Contract. These fundamental breaches of Contract shall include, but shall not be limited to, the following;

(a) the Contractor stops Work for 30 days continuously without reasonable cause or authority from the Employer's Representative;

(b) the Contractor is declared bankrupt or goes into liquidation other than for a reconstruction or amalgamation;

(c) a payment certified by the Employer's Representative is not paid by the Employer to the Contractor within 30 days after the expiry of the payment periods stated in sub clauses 14.2 and 14.3 hereinabove.

(d) the Employer's Representative gives notice that failure to correct a particular defect is a fundamental breach of Contract and the Contractor fails to correct it within a reasonable period of time.

18.2 If the Contract is terminated, the Contractor shall stop Work immediately, and leave the Site as soon as reasonably possible. The Employer's Representative shall immediately thereafter arrange for a meeting for the purpose of taking record of the Works executed and materials, goods, equipment and temporary buildings on Site.

19. Payment Upon Termination

19.1 The Employer may employ and pay other persons to carry out and complete the Works and to rectify any defects and may enter upon the Works and use all materials on Site, plant, equipment and temporary works.

19.2 The Contractor shall, during the execution or after the completion of the Works under this clause, remove from the Site as and when required within such reasonable time as the Employer's Representative may in writing specify, any temporary buildings, plant, machinery, appliances, goods or materials belonging to him, and in default thereof , the Employer may (without being responsible for any loss or damage) remove and sell any such property of the Contractor, holding the proceeds less all costs incurred to the credit of the Contractor.

19.3 Until after completion of the Works under this clause, the Employer shall not be bound by any other provision of this Contract to make any payment to the Contractor, but upon such completion as aforesaid and the verification within a reasonable time of the accounts therefor the Employer's Representative shall certify the amount of expenses properly incurred by the Employer and, if such amount added to the money paid to the Contractor before such determination exceeds the total amount which would have been payable on due completion in accordance with this Contract, the difference shall be a debt payable to the Employer by the Contractor; and if the said amount added to the said money be less than the said total amount, the difference shall be a debt payable by the Employer to the Contractor.

20. Corrupt Gifts and Payments of Commission

20.1 The Contractor shall not;

(a) Offer or give or agree to give to any person in the service of the Employer any gifts or consideration of any kind as an inducement or reward for doing or forbearing to do or for having done or forborne to do any act in relation to the obtaining or execution of this or any other contract with the Employer or for showing or forbearing to show favour or disfavour to any person in relation to this or any other contract with the Employer.

(b) Any breach of this Condition by the Contractor or by anyone employed by him or acting on his behalf (whether with or without the knowledge of the Contractor) shall be an offence under the Laws of Kenya.

21. Settlement of Disputes

21.1 Any dispute arising out of the Contract which cannot be amicably settled between the parties shall be referred by either party to the arbitration and final decision of a person to be agreed between the parties. Failing agreement to concur in the appointment of an Arbitrator, the Arbitrator shall be appointed by the chairman of the Chartered Institute of Arbitrators, Kenya branch, on the request of the applying party.

22. COMMENCEMENT OF WORKS

Commencement of works shall be within the period stated in the Appendix to form of Bid.

23. TIME FOR COMPLETION

Delete the words “within the time” to “such extended time” and substitute “by the date to dates stated or implied in Clause 14 of these Conditions of Particular Application. Competition period shall be within the period stated in the Appendix to form of Bid.

23.1 EXTENSION OF TIME FOR COMPLETION

“Neither rains falling within the rainy seasons as occurs in Kenya nor floods caused by such rains shall be deemed exceptional weather conditions such as may fairly entitle the Contractor to an extension of time for the completion of the work.”

25. DEFECTS LIABILITY

COMPLETION OF OUTSTANDING WORK AND REMEDYING

Any work ordered to be executed under this clause shall be done at a time and in manner as directed by the Engineer so as to interfere as little as possible with the operations of the Employer or of other Contractors and no extensions of the Defects Liability Period will be allowed for the execution of this work.

26. PAYMENT OF RETENTION MONEY

A retention amounting to the percentage stipulated in the Appendix to form of bid shall be made by the Engineer in the first and following Interim Payment Certificates until the amount retained shall reach the "Limit of Retention Money" named in the Appendix to form of Bid.

Upon the issue of the Taking-Over Certificate, with respect to the section of the works one half of the retention money proportionate to the value of the sections so taken over by the Employer shall become due and shall be paid to the Contractor when the Engineer shall certify in writing that the section of the works has been substantially completed.

Upon expiration of the Defects Liability Period for the whole works, the other half of the Retention Money shall be certified by the Engineer for payment to the Contractor.

Provided also that if at such time, there remain to be executed by the Contractor any work instructed, pursuant to Clause 24, in respect of the works, the Engineer shall be entitled to withhold certification until completion of any such work or so much of the balance of the Retention money as shall in the opinion of the Engineer, represents the cost of the remaining work to be executed.

27. ARBITRATION

"by an arbitrator to be agreed upon between the parties or failing agreement to be nominated on the application of either party by the appointee designated in the Appendix to form of bid for the purpose and any such referee shall be deemed to be a submission to arbitration within the meaning of the Arbitration Laws of the Republic of Kenya.

28. NOTICES TO EMPLOYER AND ENGINEER

A. The Employer's address is:

County Secretary

County Government of Embu

P.O. Box 36 - 60100 EMBU

B. The Engineer's address is:

Department of Roads, Public Works, Energy, Transport and Logistics

P.O. Box 36 - 60100

EMBU

SECTION IV – APPENDIX TO CONDITIONS OF CONTRACT

THE EMPLOYER IS

Name: COUNTY GOVERNMENT OF EMBU

Address: P.O BOX 36-60100 EMBU

The Project Manager is

Name: ROADS, PUBLIC WORKS, ENERGY, TRANSPORT AND LOGISTICS.

Address: P.O BOX 36-60100 EMBU

SECTION IX - SPECIAL CONDITIONS OF CONTRACT

The following Particular Conditions shall supplement the GCC. Whenever there is a conflict, the provisions herein shall prevail over those in the GCC.

APPENDIX CONDITIONS OF CONTRACT	CLAUSE	AMOUNT
Notification of Award		Notification of award shall be communicated to the successful tenderer and regrets to the unsuccessful bidders. The successful tenderer shall respond within 7days of receipt of the award; failure to which will lead to termination.
Bid Security	17 (instruction to tenders)	**Tender - Securing Declaration Form**
Program to be submitted	7.0	Not later than 14 (Fourteen) days after issuance of the Order to Commence
Performance Security	6.0	A performance bond worth **5%** of the contract sum shall be availed to the contract manager before contract signing
Period for commencement, from the Engineer's order to commence	23	14 days
Time for completion	24	**6 (SIX) months**
Amount of liquidated damages	16.1	**Ksh.. 15,000 per day**
Limit of liquidated damages	17.1	0.1% of Contract Value
Defects Liability Period	25	6 (Six) months
Percentage of Retention	26	10% of the Interim Payment Certificate
Minimum amount of Third Party Insurance	23.2	Kshs.800,000
Minimum amount of interim certificates	15	Kshs.2,000,000
The time within which payment is to be made after the Interim Payment Certificate is signed by the Engineer	15.2	90 days
The time within which payment is to be made after the Final Payment Certificate is signed by the Engineer	15.2	90 days
Appointer of Arbitrator	27	Chairman, Chartered Institute of Arbitrators-Kenya Chapter
Notice to Employer and Engineer	28	The Employer's address is: County Secretary Embu County Government P.O.Box 36 - 60100 EMBU

The Engineer's address is:
Director Roads
Department of Roads & Public Works
P.O.Box 36 - 60100
EMBU

Section X - Contract Forms

Table of Forms

FORM No. 1 - NOTIFICATION OF INTENTION TO AWARD

FORM NO. 2 – REQUEST FOR REVIEW

FORM No. 3-LETTER OF AWARD

FORM No. 4 - CONTRACT AGREEMENT

FORM No. 5 - PERFORMANCE SECURITY [Option 1 - Unconditional Demand Bank Guarantee]

FORM No. 6- PERFORMANCE SECURITY [Option 2– Performance Bond]

FORM No. 7 - ADVANCE PAYMENT SECURITY

FORM No. 8 - RETENTION MONEY SECURITY

FORM NO. 9 BENEFICIAL OWNERSHIP DISCLOSURE FORM

FORM No. I - Notification of Intention to Award

[*This Notification of Intention to Award shall be sent to each Tenderer that submitted a Tender.*] [*Send thisNotification to the Tenderer's Authorized Representative named in the Tender Information Form*]

FORMAT

For the attention of Tenderer's Authorized Representative

Name:……..*[insert Authorized Representative's name]* Address: *[insert Authorized Representative's Address]* Telephones: *[insert Authorized Representative's telephone/fax numbers]* Email Address: *[insert Authorized Representative's email address]*

*[**IMPORTANT:** insert the date that this Notification is transmitted to Tenderers. The Notification must be sent to all Tenderers simultaneously. This means on the same date and as close to the same time as possible.]*

Date of Transmission: This Notification is sent by: [*email*] on [*date*] (local time)

ProcuringEntity: *[insert the name of the Procuring Entity]* Contracttitle: *[insert the name of the contract]*

Country: Kenya, County_____(*if the Procuring Entity is from a County*)

This Notification of Intention to Award (Notification) notifies you of our decision to award the above contract. The transmission of this Notification begins the Standstill Period. During the Standstill Period, you may:

a) Request a debriefing in relation the evaluation of your Tender, and/or

b) Submit a Procurement-related Complaint in relation to the decision to award the contract.

1. **The successful Tenderer**

Name: [*insert name of successful Tenderer*]. Address: [*insert address of the successful Tenderer*] Contract price: [*insert contract price of the successful Tender*]

2. **Other Tenderers**: *insert names of all Tenderers that submitted a Tender. If the Tender's price was evaluated include the evaluated price as well as the Tender price as read out.]*

	Name of Tenderer	**Tender price**	**Evaluated Tender price**	*Comments (if any)*
1				
2				
3				
4				
5				
6				
7				
Etc.				

1. How to request a debriefing

DEADLINE: The deadline to request a debriefing expires at midnight on [*insert date*] (local time).

You may request a debriefing in relation to the results of the evaluation of your Tender. If you decide to request a debriefing your written request must be made within three (3) Business Days of receipt of this Notification of Intention to Award. Provide the contract name, reference number, name of the Tenderer, contact details; and address the request for debriefing as follows:

Attention: [*insert full name of person, if applicable*] **Title/position**: *[insert title/position*] **Procuring Entity**:

[*insert name of Procuring Entity*] **Email address**: [*insert email address*]

If your request for a debriefing is received within the 3 Business Days deadline, we will provide the debriefing within five (5) Business Days of receipt of your request. If we are unable to provide the debriefing within this period, the Standstill Period shall be extended by five (5) Business Days after the date that the debriefing is provided. If this happens, we will notify you and confirm the date that the extended Standstill Period will end. The debriefing may be in writing, by phone, video conference call or in person. We shall promptly advise you in writing how the debriefing will take place and confirm the date and time.

If the deadline to request a debriefing has expired, you may still request a debriefing. In this case, we will provide the debriefing as soon as practicable, and normally no later than fifteen (15) Business Days from the date of publication of the Contract Award Notice.

2. How to make a complaint

Period: Procurement-related Complaint challenging the decision to award shall be submitted by midnight, [*insert date*] (local time).

Provide the contract name, reference number, name of the Tenderer, contact details; and address the Procurement-related Complaint as follows:

Attention: [*insert full name of person, if applicable*]

Title/position: [*insert title/position*] Procuring

Entity: [*insert name of Procuring Entity*] Email

address: [*insert email address*]

At this point in the procurement process, you may submit a Procurement-related Complaint challenging the decision to award the contract. You do not need to have requested, or received, a debriefing before making this complaint. Your complaint must be submitted within the Standstill Period and received by us before the Standstill Period ends.

In summary, there are four essential requirements:

a) You must be an 'interested party'. In this case, that means a Tenderer who submitted a Tender in this tendering process, and is the recipient of a Notification of Intention to Award.

b) The complaint can only challenge the decision to award the contract.

c) You must submit the complaint within the period stated above.

d) You must include, in your complaint, all of the information necessary to support your case.

e) The application must be accompanied by the fees set out in the Procurement Regulations, which shall not be refundable (information available from the Public Procurement Authority at www.ppoa.go.ke.

3. Standstill Period

a) **DEADLINE:** The Standstill Period is due to end at midnight on [*insert date*] (local time).

i) The Standstill Period lasts ten (14) Days after the date of transmission of this Notification of Intention to Award.

(i) The Standstill Period may be extended as stated in Section 4 above.

If you have any questions regarding this Notification please do not hesitate to contact

us. On behalf of the Procuring Entity:

Name_____

Title and Position_____

Signature_____

Date_____

FORM NO. 2 - REQUEST FOR REVIEW

FORM FOR REVIEW (r.203 (1))

PUBLIC PROCUREMENT ADMINISTRATIVE REVIEW BOARD

APPLICATION NO…….OF……..20……...

BETWEEN

……...…….APPLICANT

AND

……RESPONDENT (Procuring Entity)

Request for review of the decision of the…… (Name of the Procuring Entity of ……dated the…day of ……20…….in the matter of Tender No……..…of ……..20….. for ..... (Tender description).

REQUEST FOR REVIEW

I/We……,the above named Applicant(s), of address: Physical address…….P. O. Box No……. Tel. No……..Email ……, hereby request the Public Procurement Administrative Review Board to review the whole/part of the above mentioned decision on the following grounds , namely:

1.

2.

By this memorandum, the Applicant requests the Board for an order/orders that:

1.

2.

SIGNED ……. (Applicant) Dated on…….day of ……/…20……

FOR OFFICIAL USE ONLY Lodged with the Secretary Public Procurement Administrative Review Board on……day of ……...20…..……

SIGNED

Board Secretary

FORM NO. 3 - LETTER OF AWARD

[Letter head paper of the Procuring Entity]

[Date]

FORMAT

To: *[name and address of the Contractor]*

This is to notify you that your Tender dated *[date]* for execution of the *[name of the Contract and identification number, as given in the **SCC**]* for the Accepted Contract Amount *[amount in numbers and words] [name of currency]*, as corrected and modified in accordance with the Instructions to Tenderers, is hereby accepted by our Agency.

You are requested to furnish the Performance Security within 30 days in accordance with the Conditions of Contract, using, for that purpose, one of the Performance Security Forms included in Section X, Contract Forms, of the tender document.

We attach a copy of the Contact for your

Authorized Signature:

Name and Title of

Signatory: Name of

Agency:

Attachment: Contract Agreement

FORM NO. 4 – CONTRACT AGREEMENT

THIS AGREEMENT made the _____ day of _____, _____, between _____of _____ (hereinafter "the Procuring Entity"), of the one part, and_____of_____(herein after "the Contractor"), of the other part:

WHEREAS the Procuring Entity desires that the Worksknownas_____should be executed by the Contractor, and has accepted a Tender by the Contractor for the execution and completion of these Works and the remedying of any defects therein, The Procuring Entity and the Contractor agree as follows:

1. In this Agreement words and expressions shall have the same meanings as are respectively assigned to them in the Contract documents referred to.

2. The following documents shall be deemed to form and be read and construed as part of this Agreement. This Agreement shall prevail over all other Contract documents.

   a) The Letter of Acceptance
   b) The Letter of Tender
   c) The addenda Nos_____(if any)
   d) The Particular Conditions
   e) The General Conditions;
   f) The Specification
   g) The Drawings; and
   h) The completed Schedules and any other documents forming part of the contract.

3. In consideration of the payments to be made by the Procuring Entity to the Contractor as specified in this Agreement, the Contractor hereby covenants with the Procuring Entity to execute the Works and to remedy defects therein in conformity in all respects with the provisions of the Contract.

4. The Procuring Entity hereby covenants to pay the Contractor in consideration of the execution and completion of the Works and the remedying of defects therein, the Contract Price or such other sum as may become payable under the provisions of the Contract at the times and in the manner prescribed by the Contract.

   IN WITNESS whereof the parties hereto have caused this Agreement to be executed in accordance with the laws of Kenya on the day, month and year specified above.

Signedby_____

_____(For the Procuring Entity)

Signedby_____

_____(For the Contractor)

FORM NO. 5 - PERFORMANCE SECURITY
– (Unconditional Demand Bank Guarantee)

[Guarantor letterhead or SWIFT identifier code]

Beneficiary:_____*[insert name and Address of* Procuring

Entity*]* **Date:**_____*[Insert date of issue]*

PERFORMANCE GUARANTEE No.:_____

Guarantor: *[Insert name and address of place of issue, unless indicated in the letterhead]*

1. We have been informed that_____(herein after called "the Applicant") has entered into Contract No._____*dated*_____with the Beneficiary, for the execution of _____ (herein after called "the Contract").

2. Further more, we understand that, according to the conditions of the Contract, a performance guarantee is required.

3. At the request of the Applicant, we as Guarantor, here by irrevocably undertake to pay the Beneficiary any sum or sums not exceeding in total an amount of_____( ),[1] such sum being payable in the types and proportions of currencies in which the Contract Price is payable, upon receipt by us of the Beneficiary's complying demand supported by the Beneficiary's statement, whether in the demand itself or in a separate signed document accompanying or identifying the demand, stating that the Applicant is in breach of its obligation(s) under the Contract, without the Beneficiary needing to prove or to show grounds for your demand or the sum specified therein.

4. This guarantee shall expire, no later than the …..... Day of …..... 2…[2], and any demand for payment under it must be received by us at this office indicated above on or before that date.

5. The Guarantor agrees to a one-time extension of this guarantee for a period not to exceed *[six months] [one year]*, in response to the Beneficiary's written request for such extension, such request to be presented to the Guarantor before the expiry of the guarantee."

_____

_____

[Name of Authorized Official, signature(s) and seals/stamps]

Note: Allitalicized text (including footnotes) is for use in preparing this form and shall be deleted from the final product. The Guarantor shall insert an amount representing the percentage of the Accepted Contract Amount specified in the Letter of Acceptance, less provisional sums, if any, and denominated either in the currency (cies) of the Contract or a freely convertible currency acceptable to the Beneficiary.
2Insert the date twenty-eight days after the expected completion date as described in GC Clause 11.9. The Procuring Entity should note that in the event of an extension of this date for completion of the Contract, the Procuring Entity would need to request an extension of this guarantee from the Guarantor. Such request must be in writing and must be made prior to the expiration date established in the guarantee. In preparing this guarantee, the Procuring Entity might consider adding the following text to the form, at the end of the pen ultimate paragraph: "The Guarantor agrees to a one-time extension of this guarantee for a period not to exceed [six months] [one year], in response to the Beneficiary's written request for such extension, such request to be presented to the Guarantor before the expiry of the guarantee

FORM No. 6 - PERFORMANCE SECURITY OPTION 2– (Performance Bond)

*[**Note:** Procuring Entities are advised to use Performance Security–Unconditional Demand Bank Guarantee instead of Performance Bond due to difficulties involved in calling Bond holder to action]*

[Guarantor letterhead or SWIFT identifier code]

Beneficiary:_____*[insert name and Address of* Procuring

Entity*]* **Date:**_____*[Insert date of issue]* **PERFORMANCE**

BOND No.:_____

Guarantor: [*Insert name and address of place of issue, unless indicated in the letter head]*

1. By this Bond_____as Principal (hereinafter called "the Contractor") and_____] as Surety (hereinafter called "the Surety"), are held and firmly bound unto_____] as Obligee (hereinafter called "the Procuring Entity") in theamountof_____for the payment of which sum well and truly to be made in the types and proportions of currencies in which the Contract Price is payable, the Contractor and the Surety bind themselves, their heirs, executors, administrators, successors and assigns, jointly ands everally, firmly by these presents.

2 WHEREAS the Contractor has entered into a written Agreement with the Procuring Entity dated the day of, 20_____, for_____in accordance with the documents, plans, specifications, and amendments thereto, which to the extent here in provided for, are by reference made part hereof and are herein after referred to as the Contract.

3 NOW, THEREFORE, the Condition of this Obligation is such that, if the Contractor shall promptly and faithfully perform the said Contract (including any amendments thereto), then this obligation shall be null and void; otherwise, it shall remain in full force and effect. Whenever the Contractor shall be, and declared by the Procuring Entity to be, in default under the Contract, the Procuring Entity having performed the Procuring Entity's obligations there under, the Surety may promptly remedy the default, or shall promptly:

1) Complete the Contract in accordance with its terms and conditions; or

2) Obtain a tender or tenders from qualified tenderers for submission to the Procuring Entity for completing the Contract in accordance with its terms and conditions, and upon determination by the Procuring Entity and the Surety of the lowest responsive Tenderers, arrange for a Contract between such Tenderer, and Procuring Entity and make available as work progresses (even though there should be a default or a succession of defaults under the Contract or Contracts of completion arranged under this paragraph) sufficient funds to pay the cost of completion less the Balance of the Contract Price; but not exceeding, including other costs and damages for which the Surety may be liable hereunder, the amount set forth in the first paragraph hereof. The term "Balance of the Contract Price," as used in this paragraph, shall mean the total amount payable by Procuring Entity to Contractor under the Contract, less the amount properly paid by Procuring Entity to Contractor; or

3) Pay the Procuring Entity the amount required by Procuring Entity to complete the Contract in accordance with its terms and conditions upto a total not exceeding the amount of this Bond.

4 The Surety shall not be liable for a greater sum than the specified penalty of this Bond.

5 Any suit under this Bond must be instituted before the expiration of one year from the date of the issuing of the Taking-Over Certificate. No right of action shall accrue on this Bond to or for the use of any person or corporation other than the Procuring Entity named here in or the heirs, executors, administrators, successors, and assigns of the Procuring Entity.

6 In testimony where of, the Contractor has here unto set his hand and affixed his seal, and the Surety has caused these presents to be sealed with his corporate seal duly attested by the signature of his legal representative, this day
_____of_____20_____.

SIGNED ON_____on behalf of_____

By_____in the capacity of_____

In the presence of

SIGNED ON_____on behalf of_____

By_____in the capacity of_____

In the presence of

FORM NO. 7 - ADVANCE PAYMENT SECURITY

[Demand Bank Guarantee] *[Guarantor letterhead or SWIFT identifier*

code] [Guarantor letterhead o rSWIFT identifier code]
Beneficiary:_____*[Insert name and Address of* Procuring
Entity*]* **Date:**_____*[Insert date of issue]*

ADVANCE PAYMENT GUARANTEE No.: *[Insert guarantee reference number]*

Guarantor: [*Insert name and address of place of issue, unless indicated in the letterhead]*

1. We have been informed that_____(herein after called "the Applicant") has entered into Contract No._____*dated*_____with the Beneficiary, for the execution of _____ (herein after called" the Contract").

2. Furthermore, we understand that, according to the conditions of the Contract, an advance payment in the sum _____( ) is to be made against an advance payment guarantee.

3. At the request of the Applicant, we as Guarantor, hereby irrevocably undertake to pay the Beneficiary any sum or sums not exceeding in total an amount of_____( )[1] upon receipt by us of the Beneficiary's complying demand supported by the Beneficiary's statement, whether in the demand itself or in a separate signed document accompanying or identifying the demand, stating either that the Applicant:
   a) Has used the advance payment for purposes other than the costs of mobilization in respect of th eWorks; or
   b) Has failed to repay the advance payment in accordance with the Contract conditions, specifying the amount which the Applicant has failed to repay.

4. A demand under this guarantee may be presented as from the presentation to the Guarantor of a certificate from the Beneficiary's bank stating that the advance payment referred to above has been credited to the Applicant on its account number_____at_____

5. The maximum amount of this guarantee shall be progressively reduced by the amount of the advance payment repaid by the Applicant as specified in copies of interim statements or payment certificates which shall be presented to us. This guarantee shall expire, at the latest, upon our receipt of a copy of the interim payment certificate indicating that ninety (90) percent of the Accepted Contract Amount, less provisional sums, has been certified for payment, or on the_____dayof_____,2_____,[2] whichever is earlier. Consequently, any demand for payment under this guarantee must be received by us at this office on or before that date.

6. The Guarantor agrees to a one-time extension of this guarantee for a period not to exceed *[six months] [one year]*, in response to the Beneficiary's written request for such extension, such request to be presented to the Guarantor before the expiry of the guarantee.

   [Name of Authorized Official, signature(s) and seals/stamps]

Note: All italicized text (including footnotes) is for use in preparing this form and shall be deleted from the final product. 1 The Guarantor shall insert an amount representing the amount of the advance payment and denominated either in the currency (ies) of the advance payment as specified in the Contract, or in a freely convertible currency acceptable to the Procuring Entity.
2Insert the expected expiration date of the Time for Completion. The Procuring Entity should note that in the event of an extension of the time for completion of the Contract, the Procuring Entity would need to request an extension of this guarantee from the Guarantor. Such request must be in writing and must be made prior to the expiration date established in the guarantee. In preparing this guarantee, the Procuring Entity might consider adding the following text to the form, at the end of the penultimate paragraph: "The Guarantor agrees to a one-time extension of this guarantee for a period not to exceed [six months] [one year], in response to the Beneficiary's written request for such extension, such request to be presented to the Guarantor before the expiry of the guarantee."

FORM NO. 8 - RETENTION MONEY SECURITY

[Demand Bank Guarantee]

[Guarantor letterhead]

Beneficiary: _____*[Insert name and Address of* Procuring Entity*]* **Date:** _____*[Insert date of issue]*

ADVANCE PAYMENT GUARANTEE No.:_____
[Insert guarantee reference number]

Guarantor: *[Insert name and address of place of issue, unless indicated in the letterhead]*

1. We have been informed that_____*[insert name of Contractor, which in the case of a joint venture shall be the name of the joint venture]* (herein afte rcalled" the Contractor") has entered into Contract No. _____*[Insert reference number of the contract]* dated_____with the Beneficiary, for the execution of_____*[insert name of contract and brief description of* Works*]* (herein after called" the Contract").

2. Furthermore, we understand that, according to the conditions of the Contract, the Beneficiary retains moneys upto the limit set forth in the Contract ("the Retention Money"), and that when the Taking-Over Certificate has been issued under the Contract and the first half of the Retention Money has been certified for payment, and payment of *[*insert the second half of the Retention Money] is to be made against a Retention Money guarantee.

3. At the request of the Contractor, we, as Guarantor, hereby irrevocably undertake to pay the Beneficiary any sum or sums not exceeding in total an amount of *[insert amount in figures]*_____(*[insert amount in words*_____*])*[1] upon receipt by us of the Beneficiary's complying demand supported by the Beneficiary's statement, whether in the demand itself or in a separate signed document accompanying or identifying the demand, stating that the Contractor is in breach of its obligation(s) under the Contract, without your needing to prove or show grounds for your demand or the sum specified therein.

4. A demand under this guarantee may be presented as from the presentation to the Guarantor of a certificate from the Beneficiary's bank stating that the second half of the Retention Money as referred to above has been credited to the Contractor on its account number_____at_____*[insert name and address of Applicant's bank]*.

5. This guarantee shall expire no later than the……. Day of……., 2…[2], and any demand for payment under it must be received by us at the office indicated above on or before that date.

6. The Guarantor agrees to a one-time extension of this guarantee for a period not to exceed *[six months] [one year],* in response to the Beneficiary's written request for such extension, such request to be presented to the Guarantor before the expiry of the guarantee.

_____
[Name of Authorized Official, signature(s) and seals/stamps]

Note: Allitalicized text (including foot notes) is for use in preparing this form and shall be deleted from the final product.
1The Guarantor shall insert an amount representing the amount of the second half of the Retention Money.
2Insert a date that is twenty-eigh tdays after the expiry of retention period after the actual completion date of the contract. The Procuring Entity should note that in the event of an extension of this date for completion of the Contract, the Procuring Entity would need to request an extension of this guarantee from the Guarantor. Such request must be in writing and must be made prior to the expiration date established in the guarantee.

FORM NO. 9 BENEFICIAL OWNERSHIP DISCLOSURE FORM

INSTRUCTIONS TO TENDERERS: DELETE THIS BOX ONCE YOU HAVE COMPLETED THE FORM

This Beneficial Ownership Disclosure Form ("Form") is to be completed by the successful tenderer. In case of joint venture, the tenderer must submit a separate Form for each member. The beneficial ownership information to be submitted in this Form shall be current as of the date of its submission.

For the purposes of this Form, a Beneficial Owner of a Tenderer is any natural person who ultimately owns or controls the Tenderer by meeting one or more of the following conditions:

- *Directly or indirectly holding 25% or more of the shares.*
- *Directly or in directly holding 25% or more of the voting rights.*
- *Directly or indirectly having the right to appoint a majority of the board of directors or equivalent governing body of the Tenderer.*

Tender Reference No.:_____[*insert identification no*] Name of the Assignment:_____*[insert name of the assignment]* to:

_____*[insert complete name of Procuring Entity]*

In response to your notification of award dated_____*[insert date of notification of award]* to furnish additional information on beneficial ownership:_____*[select one option as applicable and delete the options that are not applicable]*

I) We here by provide the following beneficial ownership information.

Details of beneficial ownership

Identity of Beneficial Owner	**Directly or indirectly holding 25% or more of the shares (Yes / No)**	**Directly or indirectly holding 25 % or more of the Voting Rights (Yes / No)**	**Directly or indirectly having the right to appoint a majority of the board of the directors or an equivalent governing body of the Tenderer (Yes / No)**
[include full name (last, middle, first), nationality, country of residence]			

OR

ii) We declare that there is no Beneficial Owner meeting one or more of the following conditions: directly or indirectly holding 25% or more of the shares. Directly or indirectly holding 25% or more of the voting rights. Directly or indirectly having the right to appoint a majority of the board of directors or equivalent governing body of the Tenderer.

OR

We declare that we are unable to identify any Beneficial Owner meeting one or more of the following conditions. [If this option is selected, the Tenderer shall provide explanation on why it is unable to identify any Beneficial Owner]

Directly or indirectly holding 25% or more of the shares. Directly or indirectly holding25% or more of the voting rights.

Directly or indirectly having the right to appoint a majority of the board of directors or equivalent governing body of the Tenderer]"

Name of the Tenderer: .....[insert complete name of the Tenderer]*_____

*Name of the person duly authorized to sign the Tender on behalf of the Tenderer: ** [insert complete name of person duly authorized to sign the Tender]*

Title of the person signing the Tender: ..... [insert complete title of the person signing the Tender]

Signature of the person named above: ..... [insert signature of person whose name and capacity are shown above]

Date signed ..... [insert date of signing] day of..... [Insert month]