REPUBLIC OF KENYA

KENYA URBAN ROADS AUTHORITY
Transforming Urban Mobility

TENDER DOCUMENT

FOR

TENDER NO: KURA/RMLF/HQ/307/2026-2027

FOR

TENDER NAME: UPGRADING OF SAVANNA JUNCTION - AMBIRA HOSPITAL ROAD AND ACCESS TO UGUNJA KMTC ROAD (UGUNJA, SIAYA COUNTY)

(WOMEN)

NOVEMBER 2026

DIRECTOR- (RA&CM)
KENYA URBAN ROADS AUTHORITY
P.O.BOX 41727-00100
NAIROBI
Email: Info.kura.go.ke

DIRECTOR GENERAL
KENYA URBAN ROADS AUTHORITY
P.O.BOX 41727-00100
NAIROBI
Email: dg@kura.go.ke

TABLE OF CONTENTS

INVITATION TO TENDER V

APPENDIX TO THE PREFACE VII

GUIDELINES FOR PREPARATION OF TENDER DOCUMENTS VII

2. PART 1 ~ TENDERING PROCEDURES VII
3. PART 2 ~ PROCUREMENT ENTITY'S REQUIREMENTS VII
4. PART 3 ~ CONDITIONS OF CONTRACT AND CONTRACT FORMS VIII

INVITATION TO TENDER X

SECTION I ~ INSTRUCTIONS TO TENDERERS 1

A. GENERAL PROVISIONS 1

1. SCOPE OF TENDER 1
2. FRAUD AND CORRUPTION 1
3. ELIGIBLE TENDERERS 1
4. ELIGIBLE GOODS, EQUIPMENT, AND SERVICES 3
5. TENDERER'S RESPONSIBILITIES 3

B. CONTENTS OF TENDER DOCUMENTS 3

6. SECTIONS OF TENDER DOCUMENT 3
7. SITE VISIT 4
8. PRE~TENDER MEETING 4
9. CLARIFICATION AND AMENDMENT OF TENDER DOCUMENTS 5
10. AMENDMENT OF TENDER DOCUMENTS 5

C. PREPARATION OF TENDERS 5

11. COST OF TENDERING 5
12. LANGUAGE OF TENDER 5
13. DOCUMENTS COMPRISING THE TENDER 5
14. FORM OF TENDER AND SCHEDULES 6
15. ALTERNATIVE TENDERS 6
16. TENDER PRICES AND DISCOUNTS 6
17. CURRENCIES OF TENDER AND PAYMENT 7
18. DOCUMENTS COMPRISING THE TECHNICAL PROPOSAL 7
19. DOCUMENTS ESTABLISHING THE ELIGIBILITY AND QUALIFICATIONS OF THE TENDERER
20. PERIOD OF VALIDITY OF TENDERS 8
21. TENDER SECURITY 8
22. FORMAT AND SIGNING OF TENDER 9

D SEALING AND MARKING OF TENDERS 9

23. SEALING AND MARKING OF TENDERS 9
24. DEADLINE FOR SUBMISSION OF TENDERS 10
25. LATE TENDERS 10
26. WITHDRAWAL, SUBSTITUTION, AND MODIFICATION OF TENDERS 10
27. TENDER OPENING 10

E. EVALUATION AND COMPARISON OF TENDERS 11

28. CONFIDENTIALITY 11
29. CLARIFICATION OF TENDERS 11
30. DEVIATIONS, RESERVATIONS, AND OMISSIONS 12
31. DETERMINATION OF RESPONSIVENESS 12
32. NON~MATERIAL NON~CONFORMITIES 12

33. Arithmetical Errors 12
34. Conversion to Single Currency 13
35. Margin of Preference and Reservations 13

36. Subcontractors 13
37. Evaluation of Tenders 13
38. Comparison of Tenders 14
39. Abnormally Low Tenders 14
40. Abnormally High Tenders 14
41. Unbalanced and/or Front-Loaded Tenders 14
42. Qualifications of the Tenderer 15
43. Best Evaluated Tender 15
44. Procuring Entity's Right to Accept Any Tender, and to Reject Any or All Tenders 15

F. AWARD OF CONTRACT 15

45. Award Criteria 15
46. Notice of Intention to enter into a Contract 15
47. Standstill Period 16
48. Debriefing by the Procuring Entity 16
49. Letter of Award 16
50. Signing of Contract 16
51. Appointment of Adjudicator 16
52. Performance Security. 16
53. Publication of Procurement Contract. 17
53. Procurement Related Complaints 17

SECTION II-TENDER DATA SHEET(TDS) 18

SECTION III - EVALUATION AND QUALIFY ON CRITERIA 23

1. General Provisions 23
2. Preliminary examination for Determination of Responsiveness 23
3. Tender Evaluation (ITT 35) 23
4. Multiple Contracts 23
5. Alternative Tenders (ITT 13.1) 24
6. Margin of Preference is not applicable 24
7. Post qualification and Contract award (ITT 39), more specifically 24

SECTION IV – TENDERING FORMS 25

QUALIFICATION FORMS 28
1. Form Equ. Equipment 28
2. Form per-1 29
4. FORM PER-2: 30

5. TENDERERS QUALIFICATION WITHOUT PRE-QUALIFICATION 32
FORM ELI -1.1 32
FORM ELI -1.2 33
FORM CON – 2 34
5.4 FORM FIN – 3.1: 36
5.5 FORM FIN – 3.2: 37
5.6 FORM FIN – 3.3: 38
5.7 FORM FIN – 3.4: 38
5.8 FORM EXP - 4.1 39
5.9 FORM EXP - 4.2(a) 40

5.11 FORM EXP - 4.2(B) 41

OTHER FORMS 42

6. FORM OF TENDER 42

a) TENDERER'S ELIGIBILITY- CONFIDENTIAL BUSINESS QUESTIONNAIRE 45
b) CERTIFICATE OF INDEPENDENT TENDER DETERMINATION 48
c) SELF-DECLARATION FORM - SELF DECLARATION OF THE TENDERER 49
d) APPENDIX 1- FRAUD AND CORRUPTION 52

7. FORM OF TENDER SECURITY - DEMAND BANK GUARANTEE 54
8. FORM OF TENDER SECURITY (TENDER BOND) 55
9. FORM OF TENDER-SECURING DECLARATION 56
10. APPENDIX TO TENDER 57

PART II - WORK REQUIREMENTS 58

SECTION V - DRAWINGS 58
SECTION VI - SPECIFICATIONS 58
SECTION VII - BILLS OF QUANTITIES 59
1. Objectives 59
2. Day work Schedule 59
3. Provisional Sums 59
4. The Bills of Quantities 59

PART III-CONDITIONS OF CONTRACT AND CONTRACT FORMS 60

SECTION VIII - GENERAL CONDITIONS OF CONTRACT 60
A. *General*
1. Definitions 61
2. Interpretation 61
3. Language and Law 62
4. Project Manager's Decisions 63
5. Delegation 63
6. Communications 63
7. Subcontracting 63
8. Other Contractors 63
9. Personnel and Equipment 63
10. Procuring Entity's and Contractor's Risks 63
11. Procuring Entity's Risks 63
12. Contractor's Risks 64
13. Insurance 64
14. Site Data 64
15. Contractor to Construct the Works 64
16. The Works to Be Completed by the Intended Completion Date 64
17. Approval by the Project Manager 64
18. Safety 65
19. Discoveries 65
20. Possession of the Site 65
21. Access to the Site 65
22. Instructions, Inspections and Audits 65
23. Appointment of the Adjudicator 65
24. Settlement of Claims and Disputes 66
25. Fraud and Corruption 68

B. TIME CONTROL 68

1. Program 68
2. Extension of the Intended Completion Date 69

3. Acceleration 69
4. Delays Ordered by the Project Manager 69
5. Management Meetings 69
6. Early Warning……..70

C. Quality Control 69
1. Identifying Defects 69
2. Tests 69
3. Correction of Defects 69
4. Uncorrected Defects 69

D. Cost Control 70
1. Contract Price 70
2. Changes in the Contract Price. 70
3. Variations 71
4. Cash Flow Forecasts 72
5. Payment Certificates 72
6. Payments 72
7. Compensation Events 73
8. Tax 73
9. Currency y of Payment 73
10. Price Adjustment 73
11. Retention 74
12. Liquidated Damages 74
13. Bonus 74
14. Advance Payment 74
15. Securities 75
16. Dayworks 75
17. Cost of Repairs 75

E. Finishing the Contract 75
1. Completion 75
2. Taking Over 75
3. Final Account 75
4. Operating and Maintenance Manuals 75
5. Termination 76
6. Payment upon Termination 76
7. Property 76
8. Release from Performance 76

SECTION IX - SPECIAL CONDITIONS OF CONTRACT 77
SECTION X - CONTRACT FORMS 88

FORM No. 1 - NOTIFICATION OF INTENTION TO AWARD 80
FORM No. 2 - NOTIFICATION OF AWARD - LETTER OF ACCEPTANCE 83
FORM No. 3 - CONTRACT AGREEMENT 84
FORM No. 4 - PERFORMANCE SECURITY [Option 1 - Unconditional Demand Bank Guarantee] 85
FORM No. 5- PERFORMANCE SECURITY [Option 2– Performance Bond] 86
FORM No. 6- ADVANCE PAYMENT SECURITY 88
FORM No. 7- RETENTION MONEY SECURITY 87

TENDER DOCUMENTS FOR PROCUREMENT OF SMALLWORKS

1) NAME AND CONTACT ADDRESSES OF PROCURING ENTITY

Name: KENYA URBAN ROADS AUTHORITY

Address: P.O. BOX 41727 - 00100 NAIROBI

Email address: info@kura.go.ke.

2) Invitation to Tender (ITT) No. KURA/RMLF/HQ/307/2026-2027

3) Tender Name: UPGRADING OF SAVANNA JUNCTION - AMBIRA HOSPITAL ROAD AND ACCESS TO UGUNJA KMTC ROAD (UGUNJA, SIAYA COUNTY)

INVITATION TO TENDER

KENYA URBAN ROADS AUTHORITY P.O. BOX 41727 - 00100 NAIROBI

TENDER NAME AND DESCRIPTION: UPGRADING OF SAVANNA JUNCTION - AMBIRA HOSPITAL ROAD AND ACCESS TO UGUNJA KMTC ROAD (UGUNJA, SIAYA COUNTY)

1. KENYA URBAN ROADS AUTHORITY invites sealed tenders for **UPGRADING OF SAVANNA JUNCTION - AMBIRA HOSPITAL ROAD AND ACCESS TO UGUNJA KMTC ROAD (UGUNJA, SIAYA COUNTY)** in Migori Town within Migori County. The contract period for the proposed works will be **9 months** with **3-months** defects liability period.

2. Tendering will be conducted under National open competitive method using a standardized tender document. Tendering is open to all qualified and interested Tenderers in the category specified in the tender Notice.

3. Qualified and interested tenderers may obtain further information and inspect the Tender Documents during office hours [i.e. 0800 to 1700 hours] at the address given below.

4. A complete set of tender documents may be purchased or obtained by interested tenderers upon payment of a non- refundable fees of Kshs. 1,000 (Kenya Shillings One Thousand Only) in cash or Banker's Cheque and payable to the address given below. Tender documents may be obtained electronically from the website(s) www.kura.go.ke or www.tenders.go.ke. Tender documents obtained electronically will be free of charge. Tenderers downloading documents from a designated Website shall advise the Procurement Entity that they have downloaded the tender documents, giving full contact addresses of the tenderer (*email, telephone number and postal address*).

5. Tender documents may be viewed and downloaded for free from the website www.kura.go.ke or www.tenders.go.ke. Tenderers who download the tender document **MUST** forward their particulars immediately to supplychain@kura.go.ke, +254717105233 AND/OR P.O. BOX 41727-00100, NAIROBI to facilitate any further clarification or addendum.

6. Tenders shall be quoted be in Kenya Shillings and shall include all taxes. Tenders shall remain valid for **210 days** from the date of opening of tenders.

7. All Tenders must be accompanied by a BID SECURITY IN THE FORM OF UNCONDITIONAL BANK GUARANTEE ISSUED BY BANKS REGULATED BY THE CENTRAL BANK OF KENYA (Amount Specified in the **TDS**) or Tender Securing Declaration form dully filled.

8. The Tenderer **SHALL** chronologically and sequentially serialize all pages of the tender documents submitted in the numerical format i.e. 1,2,3,4….. including the cover page and all other pages and attachments.

9. Completed tenders must be delivered to the address below on or before **AS PER TENDER NOTICE** at **10:00 a.m.** Electronic Tenders WILL NOT be permitted.

10. Tenders will be closed on **AS PER TENDER NOTICE.** at **10:00 a.m.** Tenders will be publicly opened in the presence of the Tenderers' designated representatives who choose to attend at the address below.

11. Late tenders will be rejected.

12. The addresses referred to above are:

DIRECTOR GENERAL,
KENYA URBAN ROADS AUTHORITY,
P.O. BOX 41727-00100, NAIROBI, BARABARA PLAZA OFF MAZAO ROAD, 4TH FLOOR., BLOCK D

info@kura.go.ke

A. Address for obtaining further information

KENYA URBAN ROADS AUTHORITY
SUPPLY CHAIN MANAGEMENT OFFICE
BARABARA PLAZA OFF AIRPORT SOUTH ROAD MAZAO ROAD, GROUND FLOOR;
BLOCK D
P.O. BOX 41727-00100, NAIROBI

DEPUTY DIRECTOR (SUPPLY CHAIN MANAGEMENT),
+254717105233, supplychain@kura.go.ke

B. Address for purchasing tender documents

KENYA URBAN ROADS AUTHORITY
NYANZA REGION OFFICE, PUBLIC WORKS OFFICES
KISUMU-MASENO ROAD
P.O. BOX 2699 – 40100 KISUMU.

C. Address for Submission of Tenders.

1) Name of Procuring Entity: **KENYA URBAN ROADS AUTHORITY**

2) Postal Address: **Deputy Director (URC) Nyanza Region,**
P.O. BOX 2699 – 40100,
KISUMU

3) Physical address **Nyanza Region Office, Public Works Offices on Kisumu-Maseno Road**

D. Address for Opening of Tenders.

1) Name of Procuring Entity: **KENYA URBAN ROADS AUTHORITY**
2) Physical address: **Nyanza Region Office, Public Works Offices on Kisumu-Maseno Road**

Name: ENG. SILAS M. KINOTI

Designation: DIRECTOR GENERAL

DIRECTOR GENERAL
KENYA URBAN ROADS
AUTHORITY (KURA)
P. O. Box 41727 - 00100
NAIROBI

Signature _____

Date: **26th November 2026**

PART 1 - TENDERING PROCEDURES

SECTION I: INSTRUCTIONS TO TENDERERS

A General Provisions

1. Scope of Tender

1.1 The Procuring Entity as defined in the Appendix to Conditions of Contract invites tenders for Works Contract as described in the tender documents. The name, identification, and number of lots (contracts) of this Tender Document are **specified in the TDS.**

2. Fraud and Corruption

2.1 The Procuring Entity requires compliance with the provisions of the Public Procurement and Asset Disposal Act, 2015, Section 62 "Declaration not to engage in corruption". The tender submitted by a person shall include a declaration that the person shall not engage in any corrupt or fraudulent practice and a declaration that the person or his or her sub-contractors are not debarred from participating in public procurement proceedings.

2.2 The Procuring Entity requires compliance with the provisions of the Competition Act 2010, regarding collusive practices in contracting. Any tenderer found to have engaged in collusive conduct shall be disqualified and criminal and/or civil sanctions may be imposed. To this effect, Tenders shall be required to complete and sign the "Certificate of Independent Tender Determination" annexed to the Form of Tender.

2.3 Unfair Competitive Advantage - Fairness and transparency in the tender process require that the firms or their Affiliates competing for a specific assignment do not derive a competitive advantage from having provided consulting services related to this tender. To that end, the Procuring Entity shall indicate in the **Data Sheet** and make available to all the firms together with this tender document all information that would in that respect give such firm any unfair competitive advantage over competing firms.

2.4 Unfair Competitive Advantage -Fairness and transparency in the tender process require that the Firms or their Affiliates competing for a specific assignment do not derive a competitive advantage from having provided consulting services related to this tender being tendered for. The Procuring Entity shall indicate in the **TDS** firms (if any) that provided consulting services for the contract being tendered for. The Procuring Entity shall check whether the owners or controllers of the Tenderer are same as those that provided consulting services. The Procuring Entity shall, upon request, make available to any tenderer information that would give such firm unfair competitive advantage over competing firms.

3. Eligible Tenderers

3.1 A Tenderer may be a firm that is a private entity, a state-owned enterprise or institution subject to ITT 3.7 or any combination of such entities in the form of a joint venture (JV) under an existing agreement or with the intent to enter into such an agreement supported by a letter of intent. Public employees and their close relatives *(spouses, children, brothers, sisters and uncles and aunts)* are not eligible to participate in the tender. In the case of a joint venture, all members shall be jointly and severally liable for the execution of the entire Contract in accordance with the Contract terms. The JV shall nominate a Representative who shall have the authority to conduct all business for and on behalf of any and all the members of the JV during the tendering process and, in the event the JV is awarded the Contract, during contract execution. The maximum number of JV members shall be specified in the **TDS.**

3.2 Public Officers of the Procuring Entity, their Spouses, Child, Parent, Brothers or Sister. Child, Parent, Brother or Sister of a Spouse, their business associates or agents and firms/organizations in which they have a substantial or controlling interest shall not be eligible to tender or be awarded a contract. Public Officers are also not allowed to participate in any procurement proceedings.

3.3 A Tenderer shall not have a conflict of interest. Any tenderer found to have a conflict of interest shall be disqualified. A tenderer may be considered to have a conflict of interest for the purpose of this tendering process, if the tenderer:

a) Directly or indirectly controls, is controlled by or is under common control with another tenderer; or

b) Receives or has received any direct or indirect subsidy from another tenderer; or

c) Has the same legal representative as another tenderer; or

d) Has a relationship with another tenderer, directly or through common third parties, that puts it in a position to influence the tender of another tenderer, or influence the decisions of the Procuring Entity regarding this tendering process; or

e) Any of its affiliates participated as a consultant in the preparation of the design or technical specifications of the works that are the subject of the tender; or

f) any of its affiliates has been hired (or is proposed to be hired) by the Procuring Entity as Engineer for the Contract implementation; or

g) Would be providing goods, works, or non-consulting services resulting from or directly related to consulting services for the preparation or implementation of the contract specified in this Tender Document or

h) Has a close business or family relationship with a professional staff of the Procuring Entity who:

i) are directly or indirectly involved in the preparation of the Tender document or specifications of the Contract, and/or the Tender evaluation process of such contract; or

ii) would be involved in the implementation or supervision of such Contract unless the conflict stemming from such relationship has been resolved in a manner acceptable to the Procuring Entity throughout the tendering process and execution of the Contract.

3.4 A tenderer shall not be involved in corrupt, coercive, obstructive, collusive or fraudulent practice. A tenderer that is proven to have been involved any of these practices shall be automatically disqualified.

3.5 A Tenderer (either individually or as a JV member) shall not participate in more than one Tender, except for permitted alternative tenders. This includes participation as a subcontractor in other Tenders. Such participation shall result in the disqualification of all Tenders in which the firm is involved. A firm that is not a tenderer or a JV member may participate as a subcontractor in more than one tender. Members of a joint venture may not also make an individual tender, be a subcontractor in a separate tender or be part of another joint venture for the purposes of the same Tender.

3.6 A Tenderer may have the nationality of any country, subject to the restrictions pursuant to ITT 4.8.A Tenderer shall be deemed to have the nationality of a country if the Tenderer is constituted, incorporated or registered in and operates in conformity with the provisions of the laws of that country, as evidenced by its articles of incorporation (or equivalent documents of constitution or association) and its registration documents, as the case may be. This criterion also shall apply to the determination of the nationality of proposed subcontractors or sub- consultants for any part of the Contract including related Services.

3.7 Tenderer that has been debarred from participating in public procurement shall be ineligible to tender or be awarded a contract. The list of debarred firms and individuals is available from the website of PPRA www.ppra.go.ke.

3.8 Tenderers that are state-owned enterprises or institutions may be eligible to compete and be awarded a Contract(s) only if they are accredited by PPRA to be (i) a legal public entity of the state Government and/or public administration, (ii) financially autonomous and not receiving any significant subsidies or budget support from any public entity or Government, and (iii) operating under commercial law and vested with legal rights and

liabilities similar to any commercial enterprise to enable it compete with firms in the private sector on an equal basis.

3.9 A Firms and individuals may be ineligible if their countries of origin (a) as a matter of law or official regulations, Kenya prohibits commercial relations with that country, or (b) by an act of compliance with a decision of the United Nations Security Council taken under Chapter VII of the Charter of the United Nations, Kenya prohibits any import of goods or contracting of works or services from that country, or any payments to any country, person, or entity in that country. A tenderer shall provide such documentary evidence of eligibility satisfactory to the Procuring Entity, as the Procuring Entity shall reasonably request.

3.10 Foreign tenderers are required to source at least forty (40%) percent of their contract inputs (in supplies, subcontracts and labor) from national suppliers and contractors. To this end, a foreign tenderer shall provide in its tender documentary evidence that this requirement is met. Foreign tenderers not meeting this criterion will be automatically disqualified. Information required to enable the Procuring Entity determine if this condition is met shall be provided in for this purpose is be provided in *"SECTION III - EVALUATION AND QUALIFICATION CRITERIA, Item 9".*

3.11 Pursuant to the eligibility requirements of ITT 4.10, a tender is considered a foreign tenderer, if the tenderer is not registered in Kenya or if the tenderer is registered in Kenya and has less than 51 percent ownership by Kenyan Citizens. JVs are considered as foreign tenderers if the individual member firms are not registered in Kenya or if are registered in Kenya and have less than 51 percent ownership by Kenyan citizens. The JV shall not subcontract to foreign firms more than 10 percent of the contract price, excluding provisional sums.

3.12 The National Construction Authority Act of Kenya requires that all local and foreign contractors be registered with the National Construction Authority and be issued with a Registration Certificate before they can undertake any construction works in Kenya. Registration shall not be a condition for tender, but it shall be a condition of contract award and signature. A selected tenderer shall be given opportunity to register before such award and signature of contract. Application for registration with National Construction Authority may be accessed from the website www.nca.go.ke.

3.13 The Competition Act of Kenya requires that firms wishing to tender as Joint Venture undertakings which may prevent, distort or lessen competition in provision of services are prohibited unless they are exempt in accordance with the provisions of Section 25 of the Competition Act, 2010. JVs will be required to seek for exemption from the Competition Authority. Exemption shall not be a condition for tender, but it shall be a condition of contract award and signature. A JV tenderer shall be given opportunity to seek such exemption as a condition of award and signature of contract. Application for exemption from the Competition Authority of Kenya may be accessed from the website www.cak.go.ke

3.14 A Kenyan tenderer shall provide evidence of having fulfilled his/her tax obligations by producing a valid tax clearance certificate or tax exemption certificate issued by the Kenya Revenue Authority.

4. Eligible Goods, Equipment, and Services

4.1 Goods, equipment and services to be supplied under the Contract may have their origin in any country that is not eligible under ITT 3.9. At the Procuring Entity's request, Tenderers may be required to provide evidence of the origin of Goods, equipment and services.

4.2 Any goods, works and production processes with characteristics that have been declared by the relevant national environmental protection agency or by other competent authority as harmful to human beings and to the environment shall not be eligible for procurement.

5. Tenderer's Responsibilities

5.1 The tenderer shall bear all costs associated with the preparation and submission of his/her tender, and the Procuring Entity will in no case be responsible or liable for those costs.

5.2 The tenderer, at the tenderer's own responsibility and risk, is encouraged to visit and examine the Site of the Works and its surroundings, and obtain all information that may be necessary for preparing the tender and entering into a contract for construction of the Works. The costs of visiting the Site shall be at the tenderer's own expense.

5.3 The Tenderer and any of its personnel or agents will be granted permission by the Procuring Entity to enter upon its premises and lands for the purpose of such visit. The Tenderer shall indemnify the Procuring Entity against all liability arising from death or personal injury, loss of or damage to property, and any other losses and expenses incurred as a result of the inspection.

5.4 The tenderer shall provide in the Form of Tender and Qualification Information, a preliminary description of the proposed work method and schedule, including charts, as necessary or required.

B. Contents of Tender Documents

6. Sections of Tender Document

6.1 The tender document consists of Parts 1, 2, and 3, which includes all the sections specified below, and which should be read in conjunction with any Addenda issued in accordance with ITT 8.

PART 1 Tendering Procedures

i) Section I - Instructions to Tenderers (ITT)
ii) Section II - Tender Data Sheet (TDS)
iii) Section III - Evaluation and Qualification Criteria
iv) Section IV - Tendering Forms

PART 2 Works Requirements

i) Section V - Drawings
ii) Section VI - Specifications
iii) Section VII - Bills of Quantities

PART 3 Conditions of Contract and Contract Forms

i) Section VIII - General Conditions of Contract (GCC)
ii) Section IX - Special Conditions of Contract (SC)
iii) Section X - Contract Forms

6.2 The Invitation to Tender Document (ITT) issued by the Procuring Entity is not part of the Contract documents.

6.3 Unless obtained directly from the Procuring Entity, the Procuring Entity is not responsible for the completeness of the Tender document, responses to requests for clarification, the minutes of the pre-Tender meeting (if any), or Addenda to the Tender document in accordance with ITT 8. In case of any contradiction, documents obtained directly from the Procuring Entity shall prevail.

The Tenderer is expected to examine all instructions, forms, terms, and specifications in the Tender Document and to furnish with its Tender all information and documentation as is required by the Tender document.

7. Site Visit

7.1 The Tenderer, at the Tenderer's own responsibility and risk, is encouraged to visit and examine and inspect the Site of the Required Services and its surroundings and obtain all information that may be necessary for preparing the Tender and entering into a contract for the Services. The costs of visiting the Site shall be at the Tenderer's own expense.

8. Pre-Tender Meeting

8.1 The Procuring Entity shall specify in the **TDS** if a pre-tender meeting will be held, when and where. The Procuring Entity shall also specify in the **TDS** if a pre-arranged pretender site visit will be held and when. The Tenderer's designated representative is invited to attend a pre-arranged pretender visit of the site of the works. The purpose of the meeting will be to clarify issues and to answer questions on any matter that may be raised at that stage.

8.2 The Tenderer is requested to submit any questions in writing, to reach the Procuring Entity not later than the period specified in the **TDS** before the meeting.

8.3 Minutes of the pre-Tender meeting and the pre-arranged pretender site visit of the site of the works, if applicable, including the text of the questions asked by Tenderers and the responses given, together with any responses prepared after the meeting, will be transmitted promptly to all Tenderers who have acquired the Tender Documents in accordance with ITT 6.3. Minutes shall not identify the source of the questions asked.

8.4 The Procuring Entity shall also promptly publish anonym zed (*no names*) Minutes of the pre-Tender meeting and the pre-arranged pretender visit of the site of the works at the web page identified in the **TDS**. Any modification to the Tender Documents that may become necessary as a result of the pre-tender meeting and the pre-arranged pretender site visit, shall be made by the Procuring Entity exclusively through the issue of an Addendum pursuant to ITT 8 and not through the minutes of the pre-Tender meeting. Nonattendance at the pre-Tender meeting will not be a cause for disqualification of a Tenderer.

9. Clarification and amendments of Tender Documents

9.1 A Tenderer requiring any clarification of the Tender Document shall contact the Procuring Entity in writing at the Procuring Entity's address specified in the **TDS** or raise its enquiries during the pre-Tender meeting and the pre- arranged pretender visit of the site of the works if provided for in accordance with ITT 8.4. The Procuring Entity will respond in writing to any request for clarification, provided that such request is received no later than the period specified in the **TDS** prior to the deadline for submission of tenders. The Procuring Entity shall forward copies of its response to all tenderers who have acquired the Tender Documents in accordance with ITT 6.3, including a description of the inquiry but without identifying its source. If specified in the **TDS**, the Procuring Entity shall also promptly publish its response at the web page identified in the **TDS**. Should the clarification result in changes to the essential elements of the Tender Documents, the Procuring Entity shall amend the Tender Documents appropriately following the procedure under ITT 8.4.

10. Amendment of Tendering Document

10.1 At any time prior to the deadline for submission of Tenders, the Procuring Entity may amend the Tendering document by issuing addenda.

10.2 Any addendum issued shall be part of the tendering document and shall be communicated in writing to all who have obtained the tendering document from the Procuring Entity in accordance with ITT 6.3. The Procuring Entity shall also promptly publish the addendum on the Procuring Entity's web page in accordance with ITT 8.4.

10.3 To give prospective Tenderers reasonable time in which to take an addendum into account in preparing their Tenders, the Procuring Entity shall extend, as necessary, the deadline for submission of Tenders, in accordance with ITT 25.2 below.

C. Preparation of Tenders

11. Cost of Tendering

11.1 The Tenderer shall bear all costs associated with the preparation and submission of its Tender, and the Procuring Entity shall not be responsible or liable for those costs, regardless of the conduct or outcome of the tendering process.

12. Language of Tender

12.1 The Tender, as well as all correspondence and documents relating to the tender exchanged by the tenderer and the Procuring Entity, shall be written in the English Language. Supporting documents and printed literature that are part of the Tender may be in another language provided they are accompanied by an accurate and notarized translation of the relevant passages into the English Language, in which case, for purposes of interpretation of the Tender, such translation shall govern.

13. Documents Comprising the Tender

13.1 The Tender shall comprise the following:

a) Form of Tender prepared in accordance with ITT 14;
b) Schedules including priced Bill of Quantities, completed in accordance with ITT 14 and ITT 16;
c) Tender Security or Tender-Securing Declaration, in accordance with ITT 21.1;
d) Alternative Tender, if permissible, in accordance with ITT 15;
e) Authorization: written confirmation authorizing the signatory of the Tender to commit the Tenderer, in accordance with ITT 22.3;
f) Qualifications: documentary evidence in accordance with ITT 19establishing the Tenderer's qualifications to perform the Contract if its Tender is accepted;
g) Conformity: a technical proposal in accordance with ITT 18;
h) Any other document required in the **TDS**.

13.2 In addition to the requirements under ITT 11.1, Tenders submitted by a JV shall include a copy of the Joint Venture Agreement entered into by all members. Alternatively, a letter of intent to execute a Joint Venture Agreement in the event of a successful Tender shall be signed by all members and submitted with the Tender, together with a copy of the proposed Agreement. The Tenderer shall chronologically serialize pages of all tender documents submitted.

13.3 The Tenderer shall furnish in the Form of Tender information on commissions and gratuities, if any, paid or to be paid to agents or any other party relating to this Tender.

14. Form of Tender and Schedules

14.1 The Form of Tender and Schedules, including the Bill of Quantities, shall be prepared using the relevant form*s* furnished in Section IV, Tendering Forms. The forms must be completed without any alterations to the text, and no substitutes shall be accepted except as provided under ITT 20.3. All blank spaces shall be filled in with the information requested.

15. Alternative Tenders

15.1 Unless otherwise specified in the **TDS**, alternative Tenders shall not be considered.

15.2 When alternative times for completion are explicitly invited, a statement to that effect will be included in the **TDS**, and the method of evaluating different alternative times for completion will be described in Section III, Evaluation and Qualification Criteria.

15.3 Except as provided under ITT 13.4 below, Tenderers wishing to offer technical alternatives to the requirements of the Tender Documents must first price the Procuring Entity's design as described in the Tender Documents and shall further provide all

information necessary for a complete evaluation of the alternative by the Procuring Entity, including drawings, design calculations, technical specifications, breakdown of prices, and proposed construction methodology and other relevant details. Only the technical alternatives, if any, of the Tenderer with the Winning Tender conforming to the basic technical requirements shall be considered by the Procuring Entity. When specified in the **TDS**, Tenderers are permitted to submit alternative technical solutions for specified parts of the Works, and such parts will be identified in the **TDS**, as will the method for their evaluating, and described in Section VII, Works' Requirements.

16. Tender Prices and Discounts

16.1 The prices and discounts (including any price reduction) quoted by the Tenderer in the Form of Tender and in the Bill of Quantities shall conform to the requirements specified below.

16.2 The Tenderer shall fill in rates and prices for all items of the Works described in the Bill of Quantities. Items against which no rate or price is entered by the Tenderer shall be deemed covered by the rates for other items in the Bill of Quantities and will not be paid for separately by the Procuring Entity. An item not listed in the priced Bill of Quantities shall be assumed to be not included in the Tender, and provided that the Tender is determined substantially responsive notwithstanding this omission, the average price of the item quoted by substantially responsive Tenderers will be added to the Tender price and the equivalent total cost of the Tender so determined will be used for price comparison.

16.3 The price to be quoted in the Form of Tender, in accordance with ITT 14.1, shall be the total price of the Tender, including any discounts offered.

16.4 The Tenderer shall quote any discounts and the methodology for their application in the Form of Tender, in accordance with ITT 14.1.

16.5 It will be specified in the **TDS** if the rates and prices quoted by the Tenderer are or are not subject to adjustment during the performance of the Contract in accordance with the provisions of the Conditions of Contract, except in cases where the contract is subject to fluctuations and adjustments, not fixed price. In such a case, the Tenderer shall furnish the indices and weightings for the price adjustment formulae in the Schedule of Adjustment Data and the Procuring Entity may require the Tenderer to justify its proposed indices and weightings.

16.6 Where tenders are being invited for individual lots (contracts)or for any combination of lots (packages), tenderers wishing to offer discounts for the award of more than one Contract shall specify in their Tender the price reductions applicable to each package, or alternatively, to individual Contracts within the package. Discounts shall be submitted in accordance with ITT 16.4, provided the Tenders for all lots (contracts) are opened at the same time.

16.7 All duties, taxes, and other levies payable by the Contractor under the Contract, or for any other cause, as of the date 30 days prior to the deadline for submission of Tenders, shall be included in the rates and prices and the total Tender Price submitted by the Tenderer.

17. Currencies of Tender and Payment

17.1 Tenderers shall quote entirely in Kenya Shillings. The unit rates and the prices shall be quoted by the Tenderer in the Bill of Quantities, entirely in Kenya shillings. A Tenderer expecting to incur expenditures in other currencies for inputs to the Works supplied from outside Kenya shall device own ways of getting foreign currency to meet those expenditures.

18. Documents Comprising the Technical Proposal

18.1 The Tenderer shall furnish a technical proposal including a statement of work methods, equipment, personnel, schedule and any other information as stipulated in Section IV, Tender Forms, in sufficient detail to demonstrate the adequacy of the Tenderer's proposal to meet the work's requirements and the completion time.

19. Documents Establishing the Eligibility and Qualifications of the Tenderer

19.1 Tenderers shall complete the Form of Tender, included in Section IV, Tender Forms, to establish Tenderer's eligibility in accordance with ITT 4.

19.2 In accordance with Section III, Evaluation and Qualification Criteria, to establish its qualifications to perform the Contract the Tenderer shall provide the information requested in the corresponding information sheets included in Section IV, Tender Forms.

19.3 A margin of preference will not be allowed. Preference and reservations will be allowed, individually or in joint ventures. Applying for eligibility for Preference and reservations shall supply all information required to satisfy the criteria for eligibility specified in accordance with ITT 33.1.

19.4 Tenderers shall be asked to provide, as part of the data for qualification, such information, including details of ownership, as shall be required to determine whether, according to the classification established by the Procuring Entity, a contractor or group of contractors' qualifies for a margin of preference. Further the information will enable the Procuring Entity identify any actual or potential conflict of interest in relation to the procurement and/or contract management processes, or a possibility of collusion between tenderers, and thereby help to prevent any corrupt influence in relation to the procurement process or contract management.

19.5 The purpose of the information described in ITT 19.4 above overrides any claims to confidentiality which a tenderer may have. There can be no circumstances in which it would be justified for a tenderer to keep information relating to its ownership and control confidential where it is tendering to undertake public sector work and receive public sector funds. Thus, confidentiality will not be accepted by the Procuring Entity as a justification for a Tenderer's failure to disclose, or failure to provide required information on its ownership and control.

19.6 The Tenderer shall provide further documentary proof, information or authorizations that the Procuring Entity may request in relation to ownership and control which information on any changes to the information which was provided by the tenderer under ITT 6.3. The obligations to require this information shall continue for the duration of the procurement process and contract performance and after completion of the contract, if any change to the information previously provided may reveal a conflict of interest in relation to the award or management of the contract.

19.7 All information provided by the tenderer pursuant to these requirements must be complete, current and accurate as at the date of provision to the Procuring Entity. In submitting the information required pursuant to these requirements, the Tenderer shall warrant that the information submitted is complete, current and accurate as at the date of submission to the Procuring Entity.

19.8 If a tenderer fails to submit the information required by these requirements, its tender will be rejected. Similarly, if the Procuring Entity is unable, after taking reasonable steps, to verify to a reasonable degree the information submitted by a tenderer pursuant to these requirements, then the tender will be rejected.

19.9 If information submitted by a tenderer pursuant to these requirements, or obtained by the Procuring Entity (whether through its own enquiries, through notification by the public or otherwise), shows any conflict of interest which could materially and improperly benefit the tenderer in relation to the procurement or contract management

process, then:

i) if the procurement process is still ongoing, the tenderer will be disqualified from the procurement process,
ii) if the contract has been awarded to that tenderer, the contract award will be set aside,
iii) the tenderer will be referred to the relevant law enforcement authorities for investigation of whether the tenderer or any other persons have committed any criminal offence.

19.10 If a tenderer submits information pursuant to these requirements that is incomplete, inaccurate or out-of-date, or attempts to obstruct the verification process, then the consequences ITT 6.7 will ensue unless the tenderer can show to the reasonable satisfaction of the Procuring Entity that any such act was not material, or was due to genuine error which was not attributable to the intentional act, negligence or recklessness of the tenderer.

20. Period of Validity of Tenders

20.1 Tenders shall remain valid for the Tender Validity period specified in the **TDS**. The Tender Validity period starts from the date fixed for the Tender submission deadline (as prescribed by the Procuring Entity in accordance with ITT 24). A Tender valid for a shorter period shall be rejected by the Procuring Entity as non-responsive.

20.2 In exceptional circumstances, prior to the expiration of the Tender validity period, the Procuring Entity may request Tenderers to extend the period of validity of their Tenders. The request and the responses shall be made in writing. If a Tender Security is requested in accordance with ITT 21.1, it shall also be extended for thirty (30) days beyond the deadline of the extended validity period. A Tenderer may refuse the request without forfeiting its Tender security. A Tenderer granting the request shall not be required or permitted to modify its Tender, except as provided in ITT 20.3.

20.3 If the award is delayed by a period exceeding the number of days to be specified in the **TDS** days beyond the expiry of the initial tender validity period, the Contract price shall be determined as follows:

a) in the case of **fixed price** contracts, the Contract price shall be the tender price adjusted by the factor specified in the **TDS**;
b) in the case of **adjustable price** contracts, no adjustment shall be made; or in any case, tender evaluation shall be based on the tender price without taking into consideration the applicable correction from those indicated above.

21. Tender Security

21.1 The Tenderer shall furnish as part of its Tender, either a Tender-Securing Declaration or a Tender Security as specified in the **TDS**, in original form and, in the case of a Tender Security, in the amount and currency specified in the **TDS**. A Tender-Securing Declaration shall use the form included in Section IV, Tender Forms.

21.2 If a Tender Security is specified pursuant to ITT 19.1, the Tender Security shall be a demand guarantee in any of the following forms at the Tenderer's option:

a) an unconditional Bank Guarantee issued by reputable commercial bank); or
b) an irrevocable letter of credit;
c) a Banker's cheque issued by a reputable commercial bank; or
d) another security specified **in the TDS**,

21.3 If an unconditional bank guarantee is issued by a bank located outside Kenya, the issuing bank shall have a correspondent bank located in Kenya to make it enforceable. The Tender Security shall be valid for thirty (30) days beyond the

original validity period of the Tender, or beyond any period of extension if requested under ITT 20.2.

21.4 If a Tender Security or Tender-Securing Declaration is specified pursuant to ITT 19.1, any Tender not accompanied by a substantially responsive Tender Security or Tender-Securing Declaration shall be rejected by the Procuring Entity as non-responsive.

21.5 If a Tender Security is specified pursuant to ITT 21.1, the Tender Security of unsuccessful Tenderers shall be returned as promptly as possible upon the successful Tenderer's signing the Contract and furnishing the Performance Security and any other documents required in the **TDS**. The Procuring Entity shall also promptly return the tender security to the tenderers where the procurement proceedings are terminated, all tenders were determined nonresponsive or a bidder declines to extend tender validity period.

21.6 The Tender Security of the successful Tenderer shall be returned as promptly as possible once the successful Tenderer has signed the Contract and furnished the required Performance Security, and any other documents required in the **TDS**.

21.7 The Tender Security may be forfeited or the Tender-Securing Declaration executed:

e) if a Tenderer withdraws its Tender during the period of Tender validity specified by the Tenderer on the Form of Tender, or any extension thereto provided by the Tenderer; or

f) if the successful Tenderer fails to:

i) sign the Contract in accordance with ITT 50; or

ii) furnish a Performance Security and if required in the **TDS**, and any other documents required in the **TDS**.

21.8 Where tender securing declaration is executed, the Procuring Entity shall recommend to the PPRA that PPRA debars the Tenderer from participating in public procurement as provided in the law.

21.9 The Tender Security or the Tender-Securing Declaration of a JV shall be in the name of the JV that submits the Tender. If the JV has not been legally constituted into a legally enforceable JV at the time of tendering, the Tender Security or the Tender-Securing Declaration shall be in the names of all future members as named in the letter of intent referred to in ITT 4.1 and ITT 11.2.

21.10A tenderer shall not issue a tender security to guarantee itself.

22. Format and Signing of Tender

22.1 The Tenderer shall prepare one original of the documents comprising the Tender as described in ITT 13 and clearly mark it "ORIGINAL." Alternative Tenders, if permitted in accordance with ITT 15, shall be clearly marked "ALTERNATIVE." In addition, the Tenderer shall submit copies of the Tender, in the number specified in the **TDS** and clearly mark them "COPY." In the event of any discrepancy between the original and the copies, the original shall prevail.

22.2 Tenderers shall mark as "CONFIDENTIAL" all information in their Tenders which is confidential to their business. This may include proprietary information, trade secrets, or commercial or financially sensitive information.

22.3 The original and all copies of the Tender shall be typed or written in indelible ink and shall be signed by a person duly authorized to sign on behalf of the Tenderer. This authorization shall consist of a written confirmation as specified in the **TDS** and shall be attached to the Tender. The name and position held by each person signing the authorization must be typed or printed below the signature. All pages of the Tender

where entries or amendments have been made shall be signed or initialed by the person signing the Tender.

22.4 In case the Tenderer is a JV, the Tender shall be signed by an authorized representative of the JV on behalf of the JV, and to be legally binding on all the members as evidenced by a power of attorney signed by their legally authorized representatives.

22.5 Any inter-lineation, erasures, or overwriting shall be valid only if they are signed or initialed by the person signing the Tender.

D. Submission and Opening of Tenders

23. Sealing and Marking of Tenders

23.1 Depending on the sizes or quantities or weight of the tender documents, a tenderer may use an envelope, package or container. The Tenderer shall deliver the Tender in a single sealed envelope, or in a single sealed package, or in a single sealed container bearing the name and Reference number of the Tender, addressed to the Procuring Entity and a warning not to open before the time and date for Tender opening date. Within the single envelope, package or container, the Tenderer shall place the following separate, sealed envelopes:

a) in an envelope or package or container marked "ORIGINAL", all documents comprising the Tender, as described in ITT 11; and
b) in an envelope or package or container marked "COPIES", all required copies of the Tender; and
c) if alternative Tenders are permitted in accordance with ITT 15, and if relevant:
   i) in an envelope or package or container marked "ORIGINAL –ALTERNATIVE TENDER", the alternative Tender; and
   ii) in the envelope or package or container marked "COPIES- ALTERNATIVE TENDER", all required copies of the alternative Tender.

The inner envelopes or packages or containers shall:

a) bear the name and address of the Procuring Entity.
b) bear the name and address of the Tenderer; and
c) bear the name and Reference number of the Tender.

23.2 If an envelope or package or container is not sealed and marked as required, the *Procuring Entity* will assume no responsibility for the misplacement or premature opening of the Tender. Tenders that are misplaced or opened prematurely will not be accepted.

24. Deadline for Submission of Tenders

24.1 Tenders must be received by the Procuring Entity at the address specified in the **TDS** and no later than the date and time also specified in the **TDS**. When so specified in the **TDS**, Tenderers shall have the option of submitting their Tenders electronically. Tenderers submitting Tenders electronically shall follow the electronic Tender submission procedures specified in the **TDS**.

24.2 The Procuring Entity may, at its discretion, extend the deadline for the submission of Tenders by amending the Tender Documents in accordance with ITT 8, in which case all rights and obligations of the Procuring Entity and Tenderers previously subject to the deadline shall thereafter be subject to the deadline as extended.

25. Late Tenders

25.1 The Procuring Entity shall not consider any Tender that arrives after the deadline for submission of tenders, in accordance with ITT 24. Any Tender received by the Procuring Entity after the deadline for submission of Tenders shall be declared late, rejected, and

returned unopened to the Tenderer.

26. Withdrawal, Substitution, and Modification of Tenders

26.1 A Tenderer may withdraw, substitute, or modify its Tender after it has been submitted by sending a written notice, duly signed by an authorized representative, and shall include a copy of the authorization in accordance with ITT 22.3, (except that withdrawal notices do not require copies). The corresponding substitution or modification of the Tender must accompany the respective written notice. All notices must be:

a) prepared and submitted in accordance with ITT 22 and ITT 23 (except that withdrawals notices do not require copies), and in addition, the respective envelopes shall be clearly marked "WITHDRAWAL," "SUBSTITUTION," "MODIFICATION;" and

b) received by the Procuring Entity prior to the deadline prescribed for submission of Tenders, in accordance with ITT 24.

26.2 Tenders requested to be withdrawn in accordance with ITT 26.1 shall be returned unopened to the Tenderers.

26.3 No Tender may be withdrawn, substituted, or modified in the interval between the deadline for submission of Tenders and the expiration of the period of Tender validity specified by the Tenderer on the Form of Tender or any extension thereof.

27. Tender Opening

27.1 Except in the cases specified in ITT 23 and ITT 26.2, the Procuring Entity shall publicly open and read out all Tenders received by the deadline, at the date, time and place specified in the **TDS**, in the presence of Tenderers' designated representatives who chooses to attend. Any specific electronic Tender opening procedures required if electronic Tendering is permitted in accordance with ITT 24.1, shall be as specified in the **TDS**.

27.2 First, envelopes marked "WITHDRAWAL" shall be opened and read out and the envelopes with the corresponding Tender shall not be opened, but returned to the Tenderer. No Tender withdrawal shall be permitted unless the corresponding withdrawal notice contains a valid authorization to request the withdrawal and is read out at Tender opening.

27.3 Next, envelopes marked "SUBSTITUTION" shall be opened and read out and exchanged with the corresponding Tender being substituted, and the substituted Tender shall not be opened, but returned to the Tenderer. No Tender substitution shall be permitted unless the corresponding substitution notice contains a valid authorization to request the substitution and is read out at Tender opening.

27.4 Next, envelopes marked "MODIFICATION" shall be opened and read out with the corresponding Tender. No Tender modification shall be permitted unless the corresponding modification notice contains a valid authorization to request the modification and is read out at Tender opening.

27.5 Next, all remaining envelopes shall be opened one at a time, reading out: the name of the Tenderer and whether there is a modification; the total Tender Price, per lot (contract) if applicable, including any discounts and alternative Tenders; the presence or absence of a Tender Security or Tender-Securing Declaration, if required; and any other details as the Procuring Entity may consider appropriate.

27.6 Only Tenders, alternative Tenders and discounts that are opened and read out at Tender opening shall be considered further for evaluation. The Form of Tender and pages of the Bills of Quantities are to be initialed by the members of the tender opening committee attending the opening. The number of representatives of the Procuring Entity to sign shall be specified in the **TDS**.

27.7 At the Tender Opening, the Procuring Entity shall neither discuss the merits of any Tender nor reject any Tender (except for late Tenders, in accordance with ITT 25.1).

27.8 The Procuring **Entity shall prepare minutes of the Tender Opening that shall include, as a minimum:**

a) the name of the Tenderer and whether there is a withdrawal, substitution, or modification;
b) the Tender Price, per lot (contract) if applicable, including any discounts;
c) any alternative Tenders;
d) the presence or absence of a Tender Security, if one was required.
e) number of pages of each tender document submitted.

27.9 The Tenderers' representatives who are present shall be requested to sign the minutes. The omission of a Tenderer's signature on the minutes shall not invalidate the contents and effect of the minutes. A copy of the tender opening register shall be distributed to all Tenderers upon request.

E. Evaluation and Comparison of Tenders

28. Confidentiality

28.1 Information relating to the evaluation of Tenders and recommendation of contract award shall not be disclosed to Tenderers or any other persons not officially concerned with the Tender process until information on Intention to Award the Contract is transmitted to all Tenderers in accordance with ITT 46.

28.2 Any effort by a Tenderer to influence the Procuring Entity in the evaluation of the Tenders or Contract award decisions may result in the rejection of its tender.

28.3 Notwithstanding ITT 28.2, from the time of tender opening to the time of contract award, if a tenderer wishes to contact the Procuring Entity on any **matter related to the tendering process, it shall do so in writing.**

29. Clarification of Tenders

29.1 To assist in the examination, evaluation, and comparison of the tenders, and qualification of the tenderers, the Procuring Entity may, at its discretion, ask any tenderer for a clarification of its tender, given a reasonable time for a response. Any clarification submitted by a tenderer that is not in response to a request by the Procuring Entity shall not be considered. The Procuring Entity's request for clarification and the response shall be in writing. No change, including any voluntary increase or decrease, in the prices or substance of the tender shall be sought, offered, or permitted, except to confirm the correction of arithmetic errors discovered by the Procuring Entity in the evaluation of the tenders, in accordance with ITT 33.

29.2 If a tenderer does not provide clarifications of its tender by the date and time set in the Procuring Entity's request for clarification, its Tender may be rejected.

30. Deviations, Reservations, and Omissions

30.1 During the evaluation of tenders, the following definitions apply:

a) "Deviation" is a departure from the requirements specified in the tender document;
b) "Reservation" is the setting of limiting conditions or withholding from complete acceptance of the requirements specified in the tender document; and
c) "Omission" is the failure to submit part or all of the information or documentation required in the Tender document.

31. Determination of Responsiveness

31.1 The Procuring Entity's determination of a Tender's responsiveness is to be based on the contents of the tender itself, as defined in ITT 13.

31.2 A substantially responsive Tender is one that meets the requirements of the Tender document without material deviation**, reservation, or omission. A material deviation, reservation, or omission is one that, if accepted, would:**

a) affect in any substantial way the scope, quality, or performance of the Works specified in the Contract; or

b) limit in any substantial way, inconsistent with the tender document, the Procuring Entity's rights or the tenderer's obligations under the proposed contract; or

c) if rectified, would unfairly affect the competitive position of other tenderers presenting substantially responsive tenders.

31.3 The Procuring Entity shall examine the technical aspects of the tender submitted in accordance with ITT 18, to confirm that all requirements of Section VII, Works' Requirements have been met without any material deviation, reservation or omission.

31.4 If a tender is not substantially responsive to the requirements of the tender document, it shall be rejected by the Procuring Entity and may not subsequently be made responsive by correction of the material deviation, reservation, or omission.

32. Non-material non-conformities

32.1 Provided that a tender is substantially responsive, the Procuring Entity may waive any non-conformities in the tender.

32.2 Provided that a Tender is substantially responsive, the Procuring Entity may request that the tenderer submit the necessary information or documentation, within a reasonable period, to rectify nonmaterial non-conformities in the tender related to documentation requirements. Requesting information or documentation on such non- conformities shall not be related to any aspect of the price of the tender. Failure of the tenderer to comply with the request may result in the rejection of its tender.

32.3 Provided that a tender is substantially responsive, the Procuring Entity shall rectify quantifiable nonmaterial non-conformities related to the Tender Price. To this effect, the Tender Price shall be adjusted, for comparison purposes only, to reflect the price of a missing or non-conforming item or component in the manner specified in the **TDS.**

33. Arithmetical Errors

33.1 The tender sum as submitted and read out during the tender opening shall be absolute and final and shall not be the subject of correction, adjustment or amendment in any way by any person or entity.

33.2 Provided that the Tender is substantially responsive, the Procuring Entity shall handle errors on the following basis:

a) Any error detected if considered a major deviation that affects the substance of the tender, shall lead to disqualification of the tender as non-responsive.

b) Any errors in the submitted tender arising from a miscalculation of unit price, quantity, and subtotal and total bid price shall be considered as a major deviation that affects the substance of the tender and shall lead to disqualification of the tender as non-responsive. and

c) if there is a discrepancy between words and figures, the amount in words shall prevail

33.3 Tenderers shall be notified of any error detected in their bid during the notification of a ward.

34. Currency provisions

34.1 Tenders will priced be in Kenya Shillings only. Tenderers quoting in currencies other than in Kenya shillings will be determined non-responsive and rejected.

35. Margin of Preference and Reservations

35.1 No margin of preference shall be allowed on contracts for small works.

35.2 Where it is intended to reserve the contract to specific groups under Small and Medium Enterprises, or enterprise of women, youth and/or persons living with disability, who are appropriately registered as such by the authority to be specified in the **TDS**, a procuring entity shall ensure that the invitation to tender specifically indicates that only businesses/firms belonging to those specified groups are the only ones eligible to tender. Otherwise if no so stated, the invitation will be open to all tenderers.

36. Nominated Subcontractors

36.1 Unless otherwise stated in the **TDS**, the Procuring Entity does not intend to execute any specific elements of the Works by subcontractors selected in advance by the Procuring Entity.

36.2 Tenderers may propose subcontracting up to the percentage of total value of contracts or the volume of works as specified in the **TDS**. Subcontractors proposed by the Tenderer shall be fully qualified for their parts of the Works.

36.3 The subcontractor's qualifications shall not be used by the Tenderer to qualify for the Works unless their specialized parts of the Works were previously designated by the Procuring Entity in the **TDS** as can be met by subcontractors referred to hereafter as 'Specialized Subcontractors', in which case, the qualifications of the Specialized Subcontractors proposed by the Tenderer may be added to the qualifications of the Tenderer.

37. Evaluation of Tenders

37.1 The Procuring Entity shall use the criteria and methodologies listed in this ITT and Section III, Evaluation and Qualification Criteria. No other evaluation criteria or methodologies shall be permitted. By applying the criteria and methodologies the Procuring Entity shall determine the Best Evaluated Tender in accordance with ITT 40.

37.2 To evaluate a Tender, the Procuring Entity shall consider the following:

a) price adjustment due to discounts offered in accordance with ITT 16;
b) converting the amount resulting from applying (a) and (b) above, if relevant, to a single currency in accordance with ITT 39;
c) price adjustment due to quantifiable nonmaterial non-conformities in accordance with ITT 30.3; and
d) any additional evaluation factors specified **in the TDS** and Section III, Evaluation and Qualification Criteria.

37.3 The estimated effect of the price adjustment provisions of the Conditions of Contract, applied over the period of execution of the Contract, shall not be considered in Tender evaluation.

37.4 In the case of multiple contracts or lots, Tenderers shall be allowed to tender for one or more lots and the methodology to determine the lowest evaluated cost of the lot (contract) combinations, including any discounts offered in the **Form of Tender, is specified in Section III, Evaluation and Qualification Criteria.**

38. Comparison of Tenders

38.1 The Procuring Entity shall compare the evaluated costs of all substantially responsive Tenders established in accordance with ITT 38.2 to determine the Tender that has the

lowest evaluated cost.

39. Abnormally Low Tenders

39.1 An Abnormally Low Tender is one where the Tender price, in combination with other elements of the Tender, appears so low that it raises material concerns as to the capability of the Tenderer in regards to the Tenderer's ability to perform the Contract for the offered Tender Price or that genuine competition between Tenderers is compromised.

39.2 In the event of identification of a potentially Abnormally Low Tender, the Procuring Entity shall seek written clarifications from the Tenderer, including detailed price analyses of its Tender price in relation to the subject matter of the contract, scope, proposed methodology, schedule, allocation of risks and responsibilities and any other requirements of the Tender document.

39.3 After evaluation of the price analyses, in the event that the Procuring Entity determines that the Tenderer has failed to demonstrate its capability to perform the Contract for the offered Tender Price, the Procuring Entity shall reject the Tender.

40. Abnormally High Tenders

40.1 An abnormally high price is one where the tender price, in combination with other constituent elements of the Tender, appears unreasonably too high to the extent that the Procuring Entity is concerned that it (the Procuring Entity) may not be getting value for money or it may be paying too high a price for the contract compared with market prices or that genuine competition between Tenderers is compromised.

40.2 In case of an abnormally high tender price, the Procuring Entity shall make a survey of the market prices, check if the estimated cost of the contract is correct and review the Tender Documents to check if the specifications, scope of work and conditions of contract are contributory to the abnormally high tenders. The Procuring Entity may also seek written clarification from the tenderer on the reason for the high tender price. The Procuring Entity shall proceed as follows:

i) If the tender price is abnormally high based on wrong estimated cost of the contract, the Procuring Entity may accept or not accept the tender depending on the Procuring Entity's budget considerations.

ii) If specifications, scope of work and/or conditions of contract are contributory to the abnormally high tender prices, the Procuring Entity shall reject all tenders and may retender for the contract based on revised estimates, specifications, scope of work and conditions of contract, as the case may be.

40.3 If the Procuring Entity determines that the Tender Price is abnormally too high because genuine competition between tenderers is compromised (*often due to collusion, corruption or other manipulations*), the Procuring Entity shall reject all Tenders and shall institute or cause competent Government Agencies to institute an investigation on the cause of the compromise, before retendering.

41. Unbalanced and/or Front-Loaded Tenders

41.1 If in the Procuring Entity's opinion, the Tender that is evaluated as the lowest evaluated price is seriously unbalanced and/or front loaded, the Procuring Entity may require the Tenderer to provide written clarifications. Clarifications may include detailed price analyses to demonstrate the consistency of the tender prices with the scope of works, proposed methodology, schedule and any other requirements of the Tender document.

41.2 After the evaluation of the information and detailed price analyses presented by the Tenderer, the Procuring Entity may as appropriate:

a) accept the Tender; or

b) require that the total amount of the Performance Security be increased at the expense of the Tenderer to a level not exceeding a 30% of the Contract Price; or

c) agree on a payment mode that eliminates the inherent risk of the Procuring Entity paying too much for undelivered works;or
d) reject the Tender,

42. Qualifications of the Tenderer

42.1 The Procuring Entity shall determine to its satisfaction whether the eligible Tenderer that is selected as having submitted the lowest evaluated cost and substantially responsive Tender, meets the qualifying criteria specified in Section III, Evaluation and Qualification Criteria.

42.2 The determination shall be based upon an examination of the documentary evidence of the Tenderer's qualifications submitted by the Tenderer, pursuant to ITT 19. The determination shall not take into consideration the qualifications of other firms such as the Tenderer's subsidiaries, parent entities, affiliates, subcontractors (other than Specialized Subcontractors if permitted in the Tender document), or any other firm(s) different from the Tenderer.

42.3 An affirmative determination shall be a prerequisite for award of the Contract to the Tenderer. A negative determination shall result in disqualification of the Tender, in which event the Procuring Entity shall proceed to the Tenderer who offers a substantially responsive Tender with the next lowest evaluated price to make a similar determination of that Tenderer's qualifications to perform satisfactorily.

42.4 An Abnormally Low Tender is one where the Tender price, in combination with other elements of the Tender, appears so low that it raises material concerns as to the capability of the Tenderer in regards to the Tenderer's ability to perform the Contract for the offered Tender Price.

42.5 In the event of identification of a potentially Abnormally Low Tender, the Procuring Entity shall seek written clarifications from the Tenderer, including detailed price analyses of its Tender price in relation to the subject matter of the contract, scope, proposed methodology, schedule, allocation of risks and responsibilities and any other requirements of the Tender document.

42.6 After evaluation of the price analyses, if the Procuring Entity determines that the Tenderer has failed to demonstrate its capability to perform the Contract for the offered Tender Price, the Procuring Entity shall reject the Tender.

43. Best Evaluated Tender

43.1 Having compared the evaluated prices of Tenders, the Procuring Entity shall determine the Best Evaluated Tender. The Best Evaluated Tender is the Tender of the Tenderer that meets the Qualification Criteria and whose Tender has been determined to be:
a) Most responsive to the Tender document; and
b) the lowest evaluated price.

44. Procuring Entity's Right to Accept Any Tender, and to Reject Any or All Tenders.

44.1 The Procuring Entity reserves the right to accept or reject any Tender and to annul the Tender process and reject all Tenders at any time prior to Contract Award, without thereby incurring any liability to Tenderers. In case of annulment, all Tenderers shall be notified with reasons and all Tenders submitted and specifically, Tender securities, shall be promptly returned to the Tenderers.

F. Award of Contract

45. Award Criteria

45.1 The Procuring Entity shall award the Contract to the successful tenderer whose tender has

been determined to be the Lowest Evaluated Tender.

46. Notice of Intention to enter into a Contract

46.1 Upon award of the contract and prior to the expiry of the Tender Validity Period the Procuring Entity shall issue a Notification of Intention to Enter into a Contract / Notification of award to all tenderers which shall contain, at a minimum, the following information:

a) the name and address of the Tenderer submitting the successful tender;
b) the Contract price of the successful tender;
c) a statement of the reason(s) the tender of the unsuccessful tenderer to whom the letter is addressed was unsuccessful, unless the price information in (c) above already reveals the reason;
d) the expiry date of the Standstill Period; and
e) instructions on how to request a debriefing and/or submit a complaint during the standstill period;

47. Standstill Period

47.1 The Contract shall not be signed earlier than the expiry of a Standstill Period of 14 days to allow any dissatisfied tender to launch a complaint. Where only one Tender is submitted, the Standstill Period shall not apply.

47.2 Where a Standstill Period applies, it shall commence when the Procuring Entity has transmitted to each Tenderer the Notification of Intention to Enter into a Contract with the successful Tenderer.

48. Debriefing by the Procuring Entity

48.1 On receipt of the Procuring Entity's Notification of Intention to Enter into a Contract referred to in ITT 46, an unsuccessful tenderer may make a written request to the Procuring Entity for a debriefing on specific issues or concerns regarding their tender. The Procuring Entity shall provide the debriefing within five days of receipt of the request.

48.2 Debriefings of unsuccessful Tenderers may be done in writing or verbally. The Tenderer shall bear its own costs of attending such a debriefing meeting.

49. Letter of Award

49.1 Prior to the expiry of the Tender Validity Period and upon expiry of the Standstill Period specified in ITT 42.1, upon addressing a complaint that has been filed within the Standstill Period, the Procuring Entity shall transmit the Letter of Award to the successful Tenderer. The letter of award shall request the successful tenderer to furnish the Performance Security within 21days of the date of the letter.

50. Signing of Contract

50.1 Upon the expiry of the fourteen days of the Notification of Intention to enter into contract and upon the parties meeting their respective statutory requirements, the Procuring Entity shall send the successful Tenderer the Contract Agreement.

50.2 Within fourteen (14) days of receipt of the Contract Agreement, the successful Tenderer shall sign, date, and return it to the Procuring Entity.

50.3 The written contract shall be entered into within the period specified in the notification of award and before expiry of the tender validity period

51. Appointment of Adjudicator

51.1 The Procuring Entity proposes the person named in the **TDS** to be appointed as Adjudicator under the Contract, at the hourly fee specified in the **TDS**, plus reimbursable expenses. If the Tenderer disagrees with this proposal, the Tenderer should so state in his Tender. If, in the Letter of Acceptance, the Procuring Entity does not agree on the appointment of the Adjudicator, the Procuring Entity will request the Appointing Authority designated in the Special Conditions of Contract (SCC) pursuant to Clause 23.1 of the General Conditions of Contract (GCC), to appoint the Adjudicator.

52. Performance Security

52.1 Within twenty-one (21) days of the receipt of the Letter of Acceptance from the Procuring Entity, the successful Tenderer shall furnish the Performance Security and, any other documents required in the **TDS**, in accordance with the General Conditions of Contract, subject to ITT 40.2 (b), using the Performance Security and other Forms included in Section X, Contract Forms, or another form acceptable to the Procuring Entity. A foreign institution providing a bank guarantee shall have a correspondent financial institution located in Kenya, unless the Procuring Entity has agreed in writing that a correspondent bank is not required.

52.2 Failure of the successful Tenderer to submit the above-mentioned Performance Security and other documents required in the **TDS**, or sign the Contract shall constitute sufficient grounds for the annulment of the award and forfeiture of the Tender Security. In that event the Procuring Entity may award the Contract to the Tenderer offering the next Best Evaluated Tender.

52.3 Performance security shall not be required for contracts estimated to cost less than Kenya shillings five million shillings.

53. Publication of Procurement Contract

53.1 Within fourteen days after signing the contract, the Procuring Entity shall publish the awarded contract at its notice boards and websites; and on the Website of the Authority. At the minimum, the notice shall contain the following information:

a) name and address of the Procuring Entity;
b) name and reference number of the contract being awarded, a summary of its scope and the selection method used;
c) the name of the successful Tenderer, the final total contract price, the contract duration.
d) dates of signature, commencement and completion of contract;
e) names of all Tenderers that submitted Tenders, and their Tender prices as read out at Tender opening.

54. Procurement Related Complaints and Administrative Review

54.1 The procedures for making Procurement-related Complaints are as specified in the **TDS**.

54.2 A request for administrative review shall be made in the form provided under contract forms.

Section II - Tender Data Sheet (TDS)

The following specific data shall complement, supplement, or amend the provisions in the Instructions to Tenderers (ITT). Whenever there is a conflict, the provisions herein shall prevail over those in ITT.

ITT Reference	PARTICULARS OF APPENDIX TO INSTRUCTIONS TO TENDERS
	A. General
ITT 1.1	The name of the contract is **UPGRADING OF SAVANNA JUNCTION - AMBIRA HOSPITAL ROAD AND ACCESS TO UGUNJA KMTC ROAD (UGUNJA, SIAYA COUNTY)** The reference number of the Contract is **KURA/RMLF/HQ/307/2026-2027** The number and identification of lots (contracts) comprising this tender are **NOT APPLICABLE**
ITT 2.3	The Information made available on competing firms is as follows: **NOT APPLICABLE**
ITT 2.4	The firms that provided consulting services for the contract being tendered for are: **NOT APPLICABLE**
ITT 3.1	Maximum number of members in the Joint Venture **NOT APPLICABLE**
ITT 3.10	Foreign tenderers are required to source at least forty (40%) percent of their contract inputs (in supplies, subcontracts and labor) from national suppliers and contractors. **NOT APPLICABLE**
B. Contents of Tender Document	
ITT 7.1	There SHALL BE A MANDATORY pretender site visit.
ITT 8.1	(A) Pre-Tender conference ***SHALL NOT*** take place (B) A pre-arranged pretender visit of the site of the works ***SHALL*** take place as indicated in the tender Notice
ITT 8.2	i. The Tenderer will submit any questions in writing, to reach the Procuring Entity not later than **7days before closure/opening date.** ii. The Procuring Entity will publish the response at the Website **www.kura.go.ke**
ITT 8.4	The Procuring Entity's website where Minutes of the pre-Tender meeting and the pre-arranged pretender site visit will be published **NOT APPLICABLE**
ITT 9.1	For Clarification of Tender purposes, for obtaining further information and for purchasing tender documents, the Procuring Entity's address is: **KENYA URBAN ROADS AUTHORITY** **SUPPLY CHAIN MANAGEMENT OFFICE** **BARABARA PLAZA OFF AIRPORT SOUTH ROAD MAZAO ROAD, GROUND FLOOR;** **BLOCK D** **P.O. BOX 41727-00100, NAIROBI** **DEPUTY DIRECTOR (SUPPLY CHAIN MANAGEMENT),** **+254717105233, supplychain@kura.go.ke**
C. Preparation of Tenders	
ITT 13.1 (h)	The Tenderer shall submit the following additional documents in its Tender: ***As indicated in the qualification criteria and Tender Notice***
ITT 13.2	The Tenderer shall chronologically and sequentially serialize all pages of the tender documents submitted in the format of 1,2,3,4,5……. Including the cover page and all other pages.

ITT Reference	PARTICULARS OF APPENDIX TO INSTRUCTIONS TO TENDERS
ITT 15.1	Alternative Tenders ***SHALL NOT*** be permitted
ITT 15.2	Alternative times for completion ***SHALL NOT*** permitted.
ITT 15.4	Alternative technical solutions ***SHALL NOT*** be permitted.
ITT 16.5	The prices quoted by the Tenderer shall be: ***FIXED***
ITT 17.1	The currency(ies) of the Tender and the payment currency(ies) shall be as described below: (a) The unit rates and the prices shall be quoted by the Tenderer in the Bill of Quantities, entirely **in Kenya Shillings.**
ITT 20.1	The Tender validity period shall be **210 days.**
ITT 21.1	A Tender Security *SHALL BE required.* A Tender-Securing Declaration ***SHALL BE*** required. **If a Tender Security shall be required, the amount and currency of the Tender Security shall be KSH. 1,600,000.00 (ONE MILLION SIX HUNDRED THOUSAND SHILLINGS ONLY) IN THE FORM OF TENDER BOND IN THE PRESCRIBED FORMAT.**
ITT 21.2 (d)	The other Tender Security shall **NOT BE APPLICABLE**
ITT 21.5	On the Performance Security, other documents required shall be: **NOT APPLICABLE**
ITT 22.1	The tenderer shall prepare and submit **ONE** original Tender document and **ONE** Copy Tender Document.
ITT 22.2 22.3	The written confirmation of authorization to sign on behalf of the Tenderer shall consist of ***Certificate of Independent Tender Determination***
D. Submission and Opening of Tenders	
ITT 24.1	(A) For Tender submission purposes only, the Procuring Entity's address is: (1) Name of Procuring Entity: **KENYA URBAN ROADS AUTHORITY** (2) Postal Address: **DEPUTY DIRECTOR (RURC), NYANZA REGION** **P.O BOX 2699 – 40100 KISUMU** **TEL: 254 – 020 – 2474464** **EMAIL: nyanza@kura.go.ke** (3) Physical address **NYANZA REGION, LOCATED AT THE PUBLIC WORKS OFFICE ON KISUMU-MASENO ROAD** (4) Date and time for submission of Tenders: **AS PER TENDER NOTICE** (5) Tenders shall **not be submitted** tenders electronically.
ITT 27.1	The Tender opening shall take place at the time and the address for Opening of Tenders provided below: (1) Name of Procuring Entity: **KENYA URBAN ROADS AUTHORITY** (2) Physical address: **NYANZA REGION, LOCATED AT THE PUBLIC WORKS OFFICE ON KISUMU-MASENO ROAD** (3) State date and time of tender opening. **AS PER TENDER NOTICE**

ITT Reference	PARTICULARS OF APPENDIX TO INSTRUCTIONS TO TENDERS
ITT 27.1	ELECTRONIC SUBMISSION OF TENDERS SHALL NOT BE ALLOWED.
ITT 27.6	The tenders ***shall*** be initialed by representatives of the Procuring Entity attending Tender opening. Initialization shall be conducted as follows: - ALL MEMBERS OF TENDER OPENING COMMITTEE SHALL • Initialize summary page of BOQ, • Form of Tender • Bid Bonds/Tender Securing Declaration Form • Cover page of the Bid Document • Last page of the Bid Document
E. Evaluation, and Comparison of Tenders	
ITT 32.3	The price shall be based on the average price of the item or component as quoted in other substantially responsive Tenders and published KRB unit rates for road works. If the price of the item or component cannot be derived from the price above, the Procuring Entity shall consider the tender non-responsive.
ITT 33.1	The tender sum as submitted and read out during the tender opening shall be absolute and final and shall not be the subject of correction, adjustment or amendment in any way by any person or entity.
ITT 33.2	Provided that the Tender is substantially responsive, the Procuring Entity shall handle errors on the following basis: a) Any error detected if considered a major deviation that affects the substance of the tender, shall lead to disqualification of the tender as non-responsive. b) Any errors in the submitted tender arising from a miscalculation of unit price, quantity, and subtotal and total bid price shall be considered as a major deviation that affects the substance of the tender and shall lead to disqualification of the tender as non-responsive. and c) if there is a discrepancy between words and figures, the amount in words shall prevail
ITT 35.2	The invitation to tender is extended to bidders **as indicated in the Tender Notice.**
ITT 36.1	At this time, the Procuring Entity *DOES NOT INTEND to* execute certain specific parts of the Works by subcontractors selected in advance.
ITT 36.3	The parts of the Works for which the Procuring Entity permits Tenderers to propose Specialized Subcontractors are designated as follows: **NOT APPLICABLE**
ITT 37.2 (d)	Additional requirements apply. These are detailed in the evaluation criteria in Section III, Evaluation and Qualification Criteria.
ITT 51.1	The Adjudicator SHALL APPLY.
ITT 54.1	The procedures for making a Procurement-related Complaints are detailed in the "Regulations" available from the PPRA Website info@ppra.go.ke or email complaints@ppra.go.ke. If a Tenderer wishes to make a Procurement-related

ITT Reference	PARTICULARS OF APPENDIX TO INSTRUCTIONS TO TENDERS
	Complaint, the Tenderer should submit its complaint following these procedures, in writing (by the quickest means available, that is either by hand delivery or email to: For the attention: ***ENG. SILAS M. KINOTI MBS*** Title/position: ***DIRECTOR GENERAL*** Procuring Entity: ***KENYA URBAN ROADS AUTHORITY*** Email address***: dg@kura.go.ke*** In summary, a Procurement-related Complaint may challenge any of the following: (i) the terms of the Tender Documents; and (ii) the Procuring Entity's decision to award the contract.

SECTION III - EVALUATION AND QUALIFICATION CRITERIA

1. General Provisions

Wherever a Tenderer is required to state a monetary amount, Tenderers should indicate the Kenya Shilling equivalent using the rate of exchange determined as follows:

a) For construction turnover or financial data required for each year - Exchange rate prevailing on the last day of the respective calendar year (in which the amounts for that year is to be converted) was originally established.
b) Value of single contract - Exchange rate prevailing on the date of the contract signature.
c) Exchange rates shall be taken from the publicly available source identified in the ITT 14.3. Any error in determining the exchange rates in the Tender may be corrected by the Procuring Entity.

This section contains the criteria that the Employer shall use to evaluate tender and qualify tenderers. No other factors, methods or criteria shall be used other than specified in this tender document. The Tenderer shall provide all the information requested in the forms included in Section IV, Tendering Forms. The Procuring Entity should use **the Standard Tender Evaluation Document for Goods and Works** for evaluating Tenders.

Evaluation and contract award Criteria

The Procuring Entity shall use the criteria and methodologies listed in this Section to evaluate tenders and arrive at the Lowest Evaluated Tender. The tender that (i) meets the qualification criteria, (ii) has been determined to be substantially responsive to the Tender Documents, and (iii) is determined to have the Lowest Evaluated Tender price shall be selected for award of contract.

2. Preliminary examination for Determination of Responsiveness

The Procuring Entity will start by examining all tenders to ensure they meet in all respects the eligibility criteria and other requirements in the ITT, and that the tender is complete in all aspects in meeting the requirements of "Part 2 – Procuring Entity's Works Requirements", including checking for tenders with unacceptable errors, abnormally low tenders, abnormally high tenders and tenders that are front loaded. The Standard Tender Evaluation Report Document for Goods and Works for evaluating Tenders provides very clear guide on how to deal with review of these requirements. Tenders that do not pass the Preliminary Examination will be considered irresponsive and will not be considered

further.

PRE- QUALIFICATION CHECKLIST FOR COMPLETENESS AND RESPONSIVENESS

MANDATORY REQUIREMENTS

No.	Evaluation Criterion	Qualification Requirements	Documents/Information to be verified.	Result
MR1	Form of Tender	Form of Tender duly completed and signed by authorised person Tenderer to use stationery bearing its letterhead Declarations on ownership	-Completed Form of Tender -Certificate of Tender Determination accompanied by written power of attorney - Any alterations/erasers in the Form of tender countersigned. -verify completion-all information provided, form of tender duly is signed and stamp - Bidder's letterhead/stationery. - Provide information of company ownership.	Yes/No
MR2	Tender Security	Submitted in the prescribed form, amount and validity as provided in this tender. Form of Tender Security (Tender Guarantee) - In the format provided with all conditions. Must be valid for 30 days after bid validity.	-Tender Guarantee in prescribed format -Amount as per the Tender Notice -Bank issuer must be bank recognized by Central Bank of Kenya. -verify all conditions and validity of 30 days after bid validity. -Tender Securing Declaration where applicable — provide bid validity as provided, must be completed, signed and stamped.	Yes/No
MR3	Tender Validity	Tender remains valid for the period specified in the Tender Data sheet/Notice	-Validity as provided for in tender Notice/Tender Data Sheet.	Yes/No
MR4	Authority to Sign	Tender signed by authorised person in accordance with the Tender Document	-Certificate of Independent Tender Determination -Certified Power of Attorney	Yes/No
MR5	Eligibility	Tenderer meets the eligibility requirements specified in the Tender Document All information provided as instructed in the forms	-Provide all information as required-Forms 4, ELI-1.1 and ELI-1.2 as shown here below:- -Form 5 A(a–f); CON-2 for -Non-Performance, -Pending Litigation -Litigation History- no consistent history of court/arbitral award decisions against the Tenderer in the last 3 years -Conflict of interest -Nationality- all Directors' Identification provided. -Confidential business questionnaire -Tenderer's Qualification form -verify required information in provided affidavit.	Yes/No

No.	Evaluation Criterion	Qualification Requirements	Documents/Information to be verified.	Result
			-Power of Attorney -all this information must be accompanied by certified sworn affidavit where applicable.	
MR6	Registration	Certificate of incorporation documents submitted as required	-Certificate of Incorporation -verify certification by Commissioner of Oaths as per ITT 13.1h	Yes/No
MR7	Tax Compliance	Valid Tax Compliance Certificate	-Tax Compliance Certificate — verify validity ITT 13.1h	Yes/No
MR8	Debarment Declaration	Required declaration confirming that the tenderer is not debarred	-Completed, signed and stamped debarment declaration. -Verify Form SD1 / Form 5C	Yes/No
MR9	Anti-Corruption Declaration	Required declaration on corruption/fraudulent practices submitted	-Completed, signed and stamped anti-corruption declaration. -Verify Form SD2 / Form 5C	Yes/No
MR10	Independent Tender Determination	Certificate of Independent Tender Determination duly completed	-Completed, signed and stamped Form 5B — Verify Form 5B; Certificate of Independent Tender Determination; check prescribed Power of Attorney.	Yes/No
MR11	Code of Ethics	Declaration and Commitment to Code of Ethics submitted	-Completed, signed and stamped as prescribed Code of Ethics/self-declaration form Verify Form SD3, ELI:1.3.3	Yes/No
MR12	Beneficial Ownership	Commitment to provide Beneficial Ownership Disclosure information as prescribed in the provided Form.	-Completed, signed and stamped commitment to provide beneficial ownership information Form - Verify Section IV Form 8;	Yes/No
MR13	Tender Documents	All documents expressly listed as mandatory under the Tender Document must be submitted. The person or persons signing the bid shall initial all pages of the bid where entries have been made. All pages with entries (Typed or handwritten) must be Initialled.	Tender submission — verify all expressly mandatory documents are included; pages containing entries are initialed; alterations countersigned.	Yes/No
MR14	BOQ / Schedule of Prices	Bills of Quantities must be filled, stamped and initialled Fill all the rates in the bill of Quantities sign and stamp counter sign any alteration(s)	-Fully Priced BOQ — verify all rates and items are filled, all pages of BOQs signed and stamped, and any alterations/erasers in the BOQ countersigned.	Yes/No
MR15	Key Personnel and Declaration Forms	Provide all required information Properly fill, sign and stamp	All required fields/information are completed, signed and stamped. — verify Forms PER 1 & 2 and CVs	Yes/No

No.	Evaluation Criterion	Qualification Requirements	Documents/Information to be verified.	Result
MR16	Form Equipment	Required equipment schedule and supporting information submitted Properly fill, sign and Stamp. Provide all required information	-All required information is provided, signed and stamped. -Verify Form EQU/Equipment Schedule for all equipment and supporting evidence.	Yes/No
MR17	Specific Experience	Specific Construction and Contract Management Experience Construction Experience in Key activities	Forms EXP-4.2(a) and EXP-4.2(b), with supporting schedules/contracts/certificates — verify required information and prescribed execution.	Yes/No
MR18	General Experience	General Construction and Contract Management Experience for the past 5 years	Forms EXP-4.1, with supporting schedules/contracts/certificates — verify required information from the forms and certificate of incorporation or Business Registration.	Yes/No
MR19	Financial Capacity	Financial capacity information submitted	Forms FIN-3.1, FIN-3.2 and FIN-3.3, with supporting financial statements/bank or credit facility evidence — verify required information and Certifications.	Yes/No
MR20	Current Commitments	Provide all required information as provided in the Form. Properly fill, sign and stamp	-Form FIN-3.4 and supporting contract contracts/certificates — verify that all required information is filled and completion certificates provided.	Yes/No
MR21	Site Visit	Compliance with mandatory site visit requirement, where applicable	-Site visit certificate must be signed and stamped by employer's representative. -Confirmation of attendance register -Verify compliance with the mandatory requirements of the site visit and ensure the signatory of the employer was in attendance.	Yes/No/NA
MR22	Addenda	Applicable addenda must be incorporated. clarifications acknowledged and incorporated	-Applicable addendum -Clarification — verify acknowledgement and attachment/incorporation.	Yes/No/NA
MR23	Serialization / Electronic Submission	Tender submitted in the format and manner prescribed in the Tender Document/e-GP	-e-GP submission record -Verify submission in the prescribed electronic format and manner. -Do not duplicate the page-serialization check under MR13.	Yes/No
MR24	National Construction Authority Certificate	Category as stated in the Tender Notice and TDS	NCA Certificate — verify category against the Tender Notice and TDS.	Yes/No
MR25	Recent CR12 Certificate	Certified and current as provided in the criteria.	Recent CR12 — verify current date/status as required by the Tender Notice and certification by Commissioner of Oaths.	
MR26	AGPO	Specific AGPO registration certificate as	-Verify the validity of AGPO certificate attached ITT 11.1(h)	

No.	Evaluation Criterion	Qualification Requirements	Documents/Information to be verified.	Result
		specified in TDS		
MR27	Special conditions of contract	Provide all required information.	Verify Section IX Form must be filled, signed and stamped.	

3. **Tender Evaluation (ITT 37) Price evaluation**: in addition to the criteria listed in ITT 37.2 (a)

– (c) the following criteria shall apply:

i) **Alternative Completion Times, i**f permitted under ITT 13.2, will be evaluated as follows:
NOT APPLICABLE

ii) **Alternative Technical Solutions** for specified parts of the Works, if permitted under ITT 13.4, will be evaluated as follows: NOT APPLICABLE

iii) **Other Criteria; i**f permitted under ITT 37.2(d): AS DETAILED IN EVALUATION CRITERIA IN SECTION111; EVALUATION AND QUALIFICATION CRITERIA

4. **Multiple Contracts**

Multiple contracts will be permitted in accordance with ITT 37.4. Tenderers are evaluated on basis of Lots and the lowest evaluated tenderer identified for each Lot. The Procuring Entity will select one Option of the two Options listed below for award of Contracts.

OPTION 1

i) If a tenderer wins only one Lot, the tenderer will be awarded a contract for that Lot, provided the tenderer meets the Eligibility and Qualification Criteria for that Lot.

ii) If a tenderer wins more than one Lot, the tender will be awarded contracts for all won Lots, provided the tenderer meets the aggregate Eligibility and Qualification Criteria for all the Lots. The tenderer will be awarded the combination of Lots for which the tenderer qualifies and the others will be considered for award to second lowest the tenderers.

OPTION 2

The Procuring Entity will consider all possible combinations of won Lots [contract(s)] and determine the combinations with the lowest evaluated price. Tenders will then be awarded to the Tenderer or Tenderers in the combinations provided the tenderer meets the aggregate Eligibility and Qualification Criteria for all the won Lots.

5. **Alternative Tenders (ITT 13.1)**

An alternative if permitted under ITT 15.1, will be evaluated as follows:

The Procuring Entity shall consider Tenders offered for alternatives as specified in Part 2- Works Requirements. Only the technical alternatives, if any, of the Tenderer with the Best Evaluated Tender conforming to the basic technical requirements shall be considered by the Procuring Entity.

6. **Margin of Preference** is: NOT APPLICABLE

7. **Post qualification and Contract ward (ITT 37), more specifically,**

a) In case the tender was subject to post-qualification, the contract shall be awarded to the lowest evaluated tenderer, subject to confirmation of pre-qualification data, if so required.

b) In case the tender was not subject to post-qualification, the tender that has been determined to be the lowest evaluated tenderer shall be considered for contract award, subject to meeting each of the following conditions.

i) The Tenderer shall demonstrate that it has access to, or has available, liquid assets, unencumbered real assets, lines of credit, and other financial means (independent of any contractual advance payment) sufficient to meet the construction cash flow of **Kenya Shillings 17,720,000.00 (20% of EE/Budget**

ii) Minimum <u>average</u> annual construction turnover of Kenya Shillings **Kshs. 88,600,000.00 (Equivalent to the EE/Budget),** equivalent calculated as total certified payments received for contracts in progress and/or completed within the last (two) 2 years.

iii) At least three (3) of contract(s) of a similar nature executed within Kenya, or the East African Community or abroad, that have been satisfactorily and substantially completed as a prime contractor, or joint venture member or sub-contractor each of minimum value **Kenya Shillings 44,300,000.00 (50% of Budget/EE)**

iv) Contractor's Representative and Key Personnel, which are specified as detailed in the Qualification Form Summary below; -

v) Contractors key equipment listed on the table "Contractor's Equipment" below; -

vi) Other conditions depending on their seriousness.

a) **History of non-performing contracts**:
Tenderer and each member of JV in case the Tenderer is a JV, shall demonstrate that non-performance of a contract did not occur because of the default of the Tenderer, or the member of a JV in the last 3 years. The required information shall be furnished in the appropriate form.

b) **Pending Litigation**
Financial position and prospective long-term profitability of the Single Tenderer, and in the case the Tenderer is a JV, of each member of the JV, shall remain sound according to criteria established with respect to Financial Capability under Paragraph (i) above if all pending litigation will be resolved against the Tenderer. Tenderer shall provide information on pending litigations in the appropriate form.

c) **Litigation History**
There shall be no consistent history of court/arbitral award decisions against the Tenderer, in the last **Three (3) years**. All parties to the contract shall furnish the information in the appropriate form about any litigation or arbitration resulting from contracts completed or ongoing under its execution over the year's specified. A consistent history of awards against the Tenderer or any member of a JV may result in rejection of the tender.

8. QUALIFICATION FORM SUMMARY

Item No.	Qualification Subject	Qualification Requirement	*Document To be Completed by Tenderer*	*For Procuring Entity's Use (Qualification Met or Not Met)*
1.		**FINANCIAL CAPABILITY**		
	Working Capital	(i) The Tenderer shall demonstrate that they have access to, or has available, liquid assets, unencumbered real assets, lines of credit, and other financial means (independent of any contractual advance payment) sufficient to meet the construction cash flow requirements estimated as **Kenya Shillings 16,000,000.00 (20% of EE/Budget).** equivalent for the subject contract(s) net of the Tenderer's other commitments. (ii) The Tenderers shall also demonstrate, to the satisfaction of the Procuring Entity, that it has adequate sources of finance to meet the cash flow requirements on works currently in progress and for future contract commitments. (iii) Bidders shall provide audited balance sheets or, if not required by the laws of the Tenderer's country, other financial statements acceptable to the Procuring Entity, for the last two (2) shall be submitted and must demonstrate the current soundness of the Tenderer's financial position and indicate its prospective long-term profitability (as demonstrated by Financial Evaluation Ratios).	*Form FIN-3.1, with attachments* *Financial Ratio Form t be signed by the auditor registered with ICPAK and other one of the Directors* • ***Financial Ratios*** *Computations shall be made for the following Ratios* *-Working Capital* *-Debt to Equity Ratio* *-Current Ratio* *-Operating Cash Flow Ratio* • *Line of credit froma a reputable bank* • *Six (6) months Bank statements stamped by the issuing bank showing 20% of the contract sum* ***Attachments include:*** ***Audited accounts last two years*** • *Bank statement last six (6) months shall be verified by the issuing bank*	

Item No.	Qualification Subject	Qualification Requirement	*Document To be Completed by Tenderer*	*For Procuring Entity's Use (Qualification Met or Not Met)*
			• *Line Credit – should be current and covers 20% of the contract sum and shall be verified from the issuing bank* • ***Audited accounts*** *All pages must be initialed and stamped by both a practicing Auditor registered with ICPAK and one of the Directors. Auditor's practicing membership number from ICPAK must be indicated and a valid practicing license shall be provided.* *The financial statements shall conform to the International Financial Reporting Standards (IRFS)*	
	Average Annual Construction Turnover	Minimum average annual construction turnover in *Kenya Shillings* **80,000,000.00 (Equivalent to Budget/EE),** equivalent calculated as total certified payments received for contracts in progress and/or completed within the last Three (3) years, divided by Three (3) years	Form FIN – 3.2 *Attachments include* ▪ *Financial Statements* ▪ *Payment Certificates* ▪ *Verifiable completion certificates*	
2.		**EXPERIENCE**		
	General Construction Experience	Experience under construction contracts in the role of prime contractor, JV member, sub-contractor, or management contractor for at least the last five (5) years	*Form EXP – 4.1* *Attach Letters of Award and Completion Certificates*	

Item No.	Qualification Subject	Qualification Requirement	*Document To be Completed by Tenderer*	*For Procuring Entity's Use (Qualification Met or Not Met)*
			• *For subcontracts, provide the following;* *a) Award letter of the main contractor* *b) Award letter of the subcontract* *c) Completion letter of the subcontract* *d) Witnessed subcontract agreement* *e) Recommendation letter fro the supervising Engineer accompanied by the email address and telephone contacts of the supervising Engineer for verification*	
	Specific Construction & Contract Management Experience	A minimum number of three (3) similar contracts specified below that have been satisfactorily and substantially completed as a prime contractor, joint venture member, management contractor or sub-contractor prior to the applications submission deadline. three (3) contracts, each of minimum value **Kenya shillings 40,000,000.00 of 50% of EE/ budget** equivalent. The similarity shall be based on the physical size, complexity, methods/technology or other characteristics. At least two of the three qualifying Contractors must have been undertaken and satisfactorily completed by the bidder in the capacity of a main Contractor.	Form EXP 4.2(a) & (b) Provide Letters of Award and Completion Certificates. For subcontracts/**entry level bidders**, provide the following; • Award letter of the main contractor • Award letter of the subcontract. • Completion letter of the subcontract. • Witnessed subcontract agreement	

<table>
<tr><th>Item No.</th><th>Qualification Subject</th><th>Qualification Requirement</th><th>Document To be Completed by Tenderer</th><th>For Procuring Entity's Use (Qualification Met or Not Met)</th></tr>
<tr><td></td><td></td><td></td><td>• Recommendation letter from the supervising Engineer accompanied by the email address and telephone contacts of the supervising Engineer for verification</td><td></td></tr>
<tr><td>3.</td><td></td><td>PLANT AND EQUIPMENT</td><td></td><td></td></tr>
<tr><td></td><td>Contractor's Equipment</td><td>Bidder shall provide evidence of ownership whether owned or leased (except those from Mechanical & Transport Department (MOTIHUD) Those hiring shall provide certified copies of Lease Agreement Valid for the current FY 2026-2027.

Equipment as provided below;
<table>
<tr><th>Item No.</th><th>Equipment Details</th><th>*Minimum Number Required for the Contract Execution</th></tr>
<tr><td>A. Bituminous plant and equipment</td><td>Asphalt Concrete Plant
Bitumen Pressure distributor
Asphalt concrete paver
Subtotal for A</td><td>..
1
1
<u>2</u></td></tr>
<tr><td>B. Compactors</td><td>Vibrating compaction plate 300 mm wide
Vibrating compaction plate 600 mm wide Subtotal for B</td><td>..
..
<u>..</u></td></tr>
<tr><td>C. Concrete Equipment</td><td>Mobile concrete mixers
Concrete vibrators
Subtotal for C</td><td>1
1
<u>2</u></td></tr>
</table></td><td>Form EQU and Equipment Table (9) below</td><td></td></tr>
</table>

Item No.	Qualification Subject	Qualification Requirement			*Document To be Completed by Tenderer*	*For Procuring Entity's Use (Qualification Met or Not Met)*
		D. Transport (Tippers, dumpers, water tankers)	4X2 tippers payload 7 – 12 tonnes 6X4 tippers payload 16 – 20 tonnes 8X4 tippers payload 16 – 20 tonnes Flatbed lorries Water tankers (18,000 – 20,000 litres capacity) **Subtotal for D – tippers & dumpers**	.. 4 .. 1 **5**		
		E. Earth – Moving Equipment	Wheeled loader Motor graders (93 - 205kW) Trench excavator **Subtotal for E**	1 1 .. **2**		
		F. Excavators	Hydraulic crawler mounted (7 – 10 tonnes) – 0.25 – 0.4 m3 SAE bucket. Hydraulic crawler mounted (10 – 16 tonnes) – 0.40 – 0.60 m3 SAE bucket. Hydraulic wheel mounted (7 – 10 tonnes) – 0.25 – 0.4 m3 SAE bucket. Hydraulic wheel mounted (10 – 16 tonnes) – 0.40 – 0.6 m3 SAE bucket. Hydraulic wheel mounted back loader (7 – 10 tonnes) – 0.25 – 0.4 m3 SAE bucket. Pulverised Mixer **Subtotal for F**	.. 1 .. .. **1**		
		G. Rollers	Self-propelled single drum vibrating (various types) Self-propelled double drum vibrating roller Pedestrian roller	1 1 1		

Item No.	Qualification Subject	Qualification Requirement			*Document To be Completed by Tenderer*	*For Procuring Entity's Use (Qualification Met or Not Met)*
			Pneumatic rubber tyre (1-2 tonnes/wheel) Sheep's foot roller **Subtotal for G**	1 1 **5**		
4.		**KEY PERSONNEL**				
	Contractor's Representative Key Personnel	The site staff shall possess minimum levels of qualifications set below; **HQ Staff:** Qualification: Diploma in Civil Engineering 5 years relevant experience, responsible for technical assurance and progress oversight. **Site Agent:** Qualification: Degree in Civil Engineering Registration with EBK and a member of IEK, with valid registration and practicing licenses General Experience-7 yrs Specific Experience - 5 yrs **Deputy Site Agent:** Qualification: Degree in Civil Engineering Registration with EBK and a member of IEK,with valid registration and practicing licenses General Experience-5 yrs Specific Experience - 3 yrs **Foreman:** Qualification= Diploma Civil Engineering Registration with KETRB and IETT General Experience =5 yrs Specific Experience = 3 Yrs		Form PER-1 and Form PER-2	

Item No.	Qualification Subject	Qualification Requirement	*Document To be Completed by Tenderer*	*For Procuring Entity's Use (Qualification Met or Not Met)*
		Surveyor: Qualification = Diploma in Surveying Must be registered with Institution of Surveyors of Kenya General Experience =5 yrs Specific Experience = 3yrs **Material Technician (QA)/QC** Diploma in Civil Engineering / Materials Technology or Certificates in Materials Testing Grade III, II and I; ≥5 years' experience in field and laboratory testing, QA/QC records and material approvals. HSE/Traffic Safety Officer Recognized HSE/OSH qualification; ≥5 years relevant construction traffic management experience.		
5.		**WORK METHODOLOGY**		
	Work Methodology	Submission of a brief work methodology giving a brief description of how you intend to carry out the work including; Signed resourced work **programme chart on A3 SHEET with** SUPERIMPOSED cash flow projection, traffic management, quality assurance of works and general Site organization in not less than three (3) pages and not more than five (5) pages (typed, font 12 and single spaced). The Programme should be tender specific Further, the methodology should include the following: a) **Procedure on execution of activities as outlined in the BoQs** b) Allocation of machinery/labor in execution the activities c)Procedures in quality control of the activities described in BoQs d) Provide a methodology on health and safety during the construction period. e) Personal protectivé equipment f) Signage g) Delineation of construction and passage of traffic Passage of traffic at night h) Site Organization. i) Risk Management j) Environmental Management	Section IV; Schedule B and E	

Item No.	Qualification Subject	Qualification Requirement	*Document To be Completed by Tenderer*	*For Procuring Entity's Use (Qualification Met or Not Met)*
6.		CURRENT COMMITMENTS		
	On-going Contracts	The total value of outstanding works on the on-going contracts shall not exceed the budget Disclose all live contracts; show that cash flow, management staff and committed equipment remain sufficient. Financial resources demonstrated for this bid must be net of concurrent obligations failures to which bidder shall be disqualified	Form FIN - 3.4	
7.		BILL OF QUANTITIES, ERRORS AND RATES		
	Abnormally Low Bid, abnormally high Bid, Unbalanced bid and/or Front-Loaded Bid/ errors in BOQ	Each BOQ rate shall be checked against the estimated rates to determine if the rates are abnormally Low, abnormally high, unbalanced or front-loaded. The Procuring Entity shall undertake an analysis of bidders 'rates which are potentially lower/higher than the known prevailing market rates leading to disqualification. Bids with arithmetic errors shall also be disqualified.	The BOQ rates should be balanced with no arithmetic errors. Bidders are required to quote within the known market rates.	
	REMARKS			

SUMMARY OF POST- QUALIFICATION CRITERIA

KES >ABOVE 70 MILLION

ITEM		DESCRIPTION	ASSESSMENT
1		**FINANCIAL CAPACITY**	Met or Not Met
	a	Working capital of **Kshs. 16,000,000.00 (20% of contract price)**	
	b	Cash flow statement (forecasts)	
	c	Audited Statements of account for the last 2 years presented in the Internationally Financial Reporting Standard	
	d	Turnover **Kshs. 80,000,000.00 (Equivalent to Budget)**	
		EXPERIENCE	
2	a	General Experience as Contractor in the last five years.	
	b	Experience in road construction in the last five years	
	c	Experience as a prime contractor, joint venture member, management contractor or sub-contractor in at least 3 No. Road projects with value of **Kshs. 40,000,000.00 (50% of EE/Budget)**	
3		**KEY PERSONNEL**	
	a	HQ staff meets criteria	
	b	Site Agent meets criteria	
	c	Foreman meets criteria	
	c	Surveyor meets criteria	
	d	Materials Technician (QA)/QC meets criteria	
	e	HSE/Traffic Safety Officer	
4		**PLANT AND EQUIPMENT**	
	a	Bitumen Pressure distributor	
	b	Asphalt concrete paver	
	c	Mobile concrete mixers	
	d	Concrete vibrators	
	e	6X4 tippers payload 16 – 20 tonnes (4No.)	
	f	Water tankers (18,000 – 20,000 litres capacity)	
	g	Wheeled loader	
	h	Motor graders (93 - 205kW)	
	i	Hydraulic crawler mounted (10 – 16 tonnes)	
	J	Self-propelled single drum vibrating (various types)	
	k	Self-propelled double drum vibrating roller	
	l	Pedestrian roller	
	m	Pneumatic rubber tyre (1-2 tonnes/wheel)	
	n	Sheep's foot roller	
5		**WORK METHODOLOGY**	
	a	Submission of a work methodology and a proposed resource work programme with superimposed cash projection. Work programme to be done in A3 paper	
6		**CURRENT COMMITMENTS**	
		The total value of outstanding works on the on-going contracts must not exceed the average annual turnover for the last two years	
7		**BILL OF QUANTITIES, EERORS AND RATES**	
	a	The BOQ rates should be balanced with no arithmetic errors. Bidders are required to quote within the known rates	
		Remarks	

Tenderers must achieve MET in all the measured parameters to qualify.

Tenderers who do not meet all the criteria listed above will be automatically disqualified. Tenderers who meet all the technical criteria will be subjected to financial evaluation.

9. Financial

The tenders that pass the technical assessment shall be subjected to costs comparison. The Best Evaluated Tender shall be determined as the Tender of the Tenderer that meets the Qualification Criteria and whose Tender has been determined to be:

a) Most responsive to the tendering document; and

b) The lowest evaluated cost.

QUALIFICATION FORMS

1. FORM: EQUIPMENT

The Tenderer shall provide adequate information to demonstrate clearly that it has the capability to meet the requirements for the key equipment listed in Section III, Evaluation and Qualification Criteria. A separate Form shall be prepared for each item of equipment listed, or for alternative equipment proposed by the Tenderer.

Item of equipment		
Equipment information	Name of manufacturer	Model and power rating
	Capacity	Year of manufacture
Current status	Current location	
	Details of current commitments	
Source	Indicate source of the equipment ☐ Owned ☐ Rented ☐ Leased ☐ Specially manufactured	

Omit the following information for equipment owned by the Tenderer.

Owner	Name of owner	
	Address of owner	
	Telephone	Contact name and title
	Fax	Telex
Agreements	Details of rental / lease / manufacture agreements specific to the project	

2. FORM PER - 1

Contractor's Representative and Key Personnel Schedule

Tenderers should provide the names and details of the suitably qualified Contractor's Representative and Key Personnel to perform the Contract. The data on their experience should be supplied using the Form PER-2 below for each candidate.

Contractor' Representative and Key Personnel

1.	Title of position: Head Office Staff	
	Name of candidate: ……..	
	Duration of appointment:	…… [*insert the whole period (start and end dates) for which this position will be engaged*]
	Time commitment: for this position:	…… [*insert the number of days/week/months/ that has been scheduled for this position*]
	Expected time schedule for this position:	…… [*insert the expected time schedule for this position (e.g. attach high level Gantt chart*]
2.	Title of position: Site Agent	
	Name of candidate: ……..	
	Duration of appointment:	…… [*insert the whole period (start and end dates) for which this position will be engaged*]
	Time commitment: for this position:	…… [*insert the number of days/week/months/ that has been scheduled for this position*]
	Expected time schedule for this position:	…… [*insert the expected time schedule for this position (e.g. attach high level Gantt chart*]
3.	Title of position: Foreman	
	Name of candidate: ……..	
	Duration of appointment:	…… [*insert the whole period (start and end dates) for which this position will be engaged*]
	Time commitment: for this position:	…… [*insert the number of days/week/months/ that has been scheduled for this position*]
	Expected time schedule for this position:	…… [*insert the expected time schedule for this position (e.g. attach high level Gantt chart*]

4.	Title of position: Surveyor	
	Name of candidate: ……..	

	Duration of appointment:	…… [*insert the whole period (start and end dates) for which this position will be engaged*]
	Time commitment: for this position:	…… [*insert the number of days/week/months/ that has been scheduled for this position*]
	Expected time schedule for this position:	……. [*insert the expected time schedule for this position (e.g. attach high level Gantt chart*]

3. FORM PER-2:

Resume and Declaration - Contractor's Representative and Key Personnel.

Summarize professional experience in reverse chronological order. Indicate particular technical and managerial experience relevant to the project.

Name of Tenderer ……

Position: …… [*title of position from Form PER-1*]		
Personnel information	Name: ……	Date of birth: ……..
	Address: ……..	E-mail: ……..
	Professional qualifications: ……	
	Academic qualifications: …….	
	Language proficiency: …… *[language and levels of speaking, reading and writing skills]*	
Details		
	Address of Procuring Entity: ……	
	Telephone: ……	Contact (manager / personnel officer): ……
	Fax:	
	Job title: …….	Years with present Procuring Entity: …….

Summarize professional experience in reverse chronological order. Indicate particular technical and managerial experience relevant to the project.

Project	Role	Duration of involvement	Relevant experience
[main project details]	*[role and responsibilities on the project]*	*[time in role]*	*[describe the experience relevant to this position]*

Declaration

I, the undersigned Key Personnel, certify that to the best of my knowledge and belief, the information contained in this Form PER -2 correctly describes myself, my qualifications and my experience.

I confirm that I am available as certified in the following table and throughout the expected time schedule for this position as provided in the Tender:

Commitment	Details
Commitment to duration of contract:	*Start Date……..End Date……* *[insert period (start and end dates) for which this Contractor's Representative or Key Personnel is available to work on this contract]*
Time commitment:	*Start Date……..End Date……* *[insert period (start and end dates) for which this Contractor's Representative or Key Personnel is available to work on this contract]*

I understand that any misrepresentation or omission in this Form may:

a) be taken into consideration during Tender evaluation;

b) my disqualification from participating in the Tender;

c) my dismissal from the contract.

Name of Key Personnel: *[insert name]*

Signature:_____

Date: (day month year): _____

Countersignature of authorized representative of the Tenderer:

Signature: _____

Date: (day month year): _____

Position: …… [*title of position from Form PER-1*]		
Personnel information	Name: ……	Date of birth: ……..
	Address: ……..	E-mail: ……..
	Professional qualifications: ……	
	Academic qualifications: …….	
	Language proficiency: …… *[language and levels of speaking, reading and writing skills]*	
Details		
	Address of Procuring Entity: ……	
	Telephone: ……	Contact (manager / personnel officer): ……
	Fax:	
	Job title: …….	Years with present Procuring Entity: …….

Summarize professional experience in reverse chronological order. Indicate particular technical and managerial experience relevant to the project.

Project	**Role**	**Duration of involvement**	**Relevant experience**
[main project details]	*[role and responsibilities on the project]*	*[time in role]*	*[describe the experience relevant to this position]*

Declaration

I, the undersigned Key Personnel, certify that to the best of my knowledge and belief, the information contained in this Form PER -2 correctly describes myself, my qualifications and my experience.

I confirm that I am available as certified in the following table and throughout the expected time schedule for this position as provided in the Tender:

Commitment	Details
Commitment to duration of contract:	*Start Date……..End Date……* *[insert period (start and end dates) for which this Contractor's Representative or Key Personnel is available to work on this contract]*
Time commitment:	*Start Date……..End Date……* *[insert period (start and end dates) for which this Contractor's Representative or Key Personnel is available to work on this contract]*

I understand that any misrepresentation or omission in this Form may:

d) be taken into consideration during Tender evaluation;

e) my disqualification from participating in the Tender;

f) my dismissal from the contract.

Name of Key Personnel: *[insert name]*

Signature:_____

Date: (day month year): _____

Countersignature of authorized representative of the Tenderer:

Signature: _____

Date: (day month year): _____

FORM CON – 3(A): DECLARATION OF KNOWLEDGE OF SITE

This is to certify that

[Name/s]……

……

Being the authorized representative/Agent of [Name of bidder]

……

……

Has familiarized himself/herself with the Site conditions in accordance with the Instructions to bidders and the Tender Notice for purposes of bidding for this road project

Having studied the tender Documents, and gained knowledge of local conditions on site likely to influence the works and cost thereof, I certify that I am satisfied with the description of the works and understand the scope of works as specified and as implied in this tender.

…… ……..

(Signed and Stamped by Authorized Bidder's Agent/ Representative) **(Designation)**

FORM CON – 3(B): CERTIFICATE OF BIDDER'S VISIT TO SITE

This is to certify that

[*Name/s*]……

…….

Being the authorized representative/Agent of [*Name of bidder*]

……

……

participated in the organized inspection visit of the site of the works for the

UPGRADING OF SAVANNA JUNCTION - AMBIRA HOSPITAL ROAD AND ACCESS TO UGUNJA KMTC ROAD (UGUNJA, SIAYA COUNTY)
KURA/RMLF/HQ/307/2026-2027

held on……..day of……20…….

Signed……..
(Employer's Representative)

……..……

…… ……..
(Name of Employer's Representative) (Designation)

NOTE: This form is to be completed at the time of the organized site visit.

4. TENDERER'S QUALIFICATION WITHOUT PRE-QUALIFICATION

To establish its qualifications to perform the contract in accordance with Section III, Evaluation and Qualification Criteria the Tenderer shall provide the information requested in the corresponding Information Sheets included hereunder.

4.1 FORM ELI -1.1

Tenderer Information Form

Date: _____

ITT No. 13.1 and title: DOCUMENTS COMPRISING THE TENDER

Tenderer's name ……..
In case of Joint Venture (JV), name of each member: NOT APPLICABLE
Tenderer's actual or intended country of registration: ……
Tenderer's actual or intended year of incorporation: …….
Tenderer's legal address ……. [in country of registration]:
Tenderer's authorized representative information Name: _____ Address: _____ Telephone/Fax numbers: _____ E-mail address: _____
1. Attached are copies of original documents of ☐ Articles of Incorporation (or equivalent documents of constitution or association), and/or documents of registration of the legal entity named above, in accordance with ITT 3.6 ☐ In case of JV, letter of intent to form JV or JV agreement, in accordance with ITT 3.5 ☐ In case of state-owned enterprise or institution, in accordance with ITT 3.8, documents establishing: • Legal and financial autonomy • Operation under commercial law • Establishing that the Tenderer is not under the supervision of the Procuring Entity 2. Included are the organizational chart, a list of Board of Directors, and the beneficial ownership.

4.2 FORM ELI -1.2

Tenderer's JV Information Form
(to be completed for each member of Tenderer's JV)
Date: *NOT APPLICABLE*

ITT No. and title: *NOT APPLICABLE*

Tenderer's JV name: *NOT APPLICABLE*
JV member's name: *NOT APPLICABLE*
JV member's country of registration: *NOT APPLICABLE*
JV member's year of constitution: *NOT APPLICABLE*
JV member's legal address in country of constitution: *NOT APPLICABLE*
JV member's authorized representative information Name: ___ *NOT APPLICABLE* Address: _____ *NOT APPLICABLE* Telephone/Fax numbers: _ *NOT APPLICABLE* E-mail address: ____ *NOT APPLICABLE*
1. Attached are copies of original documents of ☐ Articles of Incorporation (or equivalent documents of constitution or association), and/or registration documents of the legal entity named above, in accordance with ITT 3.6. ☐ In case of a state-owned enterprise or institution, documents establishing legal and financial autonomy, operation in accordance with commercial law, and that they are not under the supervision of the Procuring Entity, in accordance with ITT 3.8. 2. Included are the organizational chart, a list of Board of Directors, and the beneficial ownership.

4.3 FORM CON – 2

Historical Contract Non-Performance, Pending Litigation and Litigation History

Tenderer's Name: _____

Date: _____

JV Member's Name: NOT APPLICABLE

ITT No. 37 (7) vi, (a) and title: NON-PERFORMANCE

Non-Performed Contracts in accordance with Section III, Evaluation and Qualification Criteria			
☐ Contract non-performance did not occur since …… specified in Section III, Evaluation and Qualification Criteria, Sub-Factor 2.1. ☐ Contract(s) not performed since …….. *[insert year]* specified in Section III, Evaluation and Qualification Criteria, requirement 2.1			
Year	**Non- performed portion of contract**	**Contract Identification**	**Total Contract Amount (current value, currency, exchange rate and Kenya Shilling equivalent)**
…… …… .	…….. …….. *[insert amount and percentage]*	…… …… Contract Identification: …….. …….. …….. *[indicate complete contract name/ number, and any other identification]* Name of Procuring Entity: …… Address of Procuring Entity: …… Reason(s) for nonperformance: …… *[indicate main reason(s)]*	…….. …… *[insert amount]*
Pending Litigation, in accordance with Section III, Evaluation and Qualification Criteria			
☐ No pending litigation in accordance with Section III, Evaluation and Qualification Criteria, Sub-Factor 2.3. ☐ Pending litigation in accordance with Section III, Evaluation and Qualification Criteria, Sub-Factor 2.3 as indicated below.			

Year of dispute	Amount in dispute (currency)	Contract Identification	Total Contract Amount (currency), Kenya Shilling Equivalent (exchange rate)
……..	……..	Contract Identification: …… ……. Name of Procuring Entity: ……. …… Address of Procuring Entity: ……. …… Matter in dispute: …… Party who initiated the dispute: ……. Status of dispute: ……	…….
……..	……	Contract Identification: ……. …….. Name of Procuring Entity: ……. …….. Address of Procuring Entity: ……. …… Matter in dispute: …… Party who initiated the dispute: ……. ……. Status of dispute: ……..	
Litigation History in accordance with Section III, Evaluation and Qualification Criteria			
☐ No Litigation History in accordance with Section III, Evaluation and Qualification Criteria, Sub-Factor 2.4. ☐ Litigation History in accordance with Section III, Evaluation and Qualification Criteria, Sub-Factor 2.4 as indicated below.			

Year of award	Outcome as percentage of Net Worth	Contract Identification	Total Contract Amount (currency), Kenya Shilling Equivalent (exchange rate)
…… *[insert year]*	…….. *[insert percentage]*	Contract Identification: …….. …… …… *[indicate complete contract name/ number, and any other identification]* Name of Procuring Entity: …… …….. Address of Procuring Entity: …… …… ……. [indicate complete contract name, number, and any other identification] Name of Procuring Entity: ……. …… *[insert full name]* Address of Procuring Entity: ……. …… Matter in dispute: …… *[indicate main issues in dispute]* Party who initiated the dispute: …….. …… *[indicate "Procuring Entity" or "Contractor"]* Reason(s) for Litigation and award decision……. …… *[indicate main reason(s)]*	…… *[insert amount]*

4.4 FORM FIN – 3.1:

Financial Situation and Performance

Tenderer's Name: ……..

Date: …….

JV Member's Name: NOT APPLICABLE

ITT No. 37 (7) b i, ii & iii and title: FINANCIAL PERFORMANCE

4.4.1. Financial Data

Type of Financial information in_____ (currency)	Historic information for previous _____*years,* _____ (Amount in currency, currency, exchange rate*, USD equivalent)				
	Year 1	Year 2	Year 3	Year 4	Year 5
Statement of Financial Position (Information from Balance Sheet)					
Total Assets (TA)					
Total Liabilities (TL)					
Total Equity/Net Worth (NW)					
Current Assets (CA)					
Current Liabilities (CL)					
Working Capital (WC)					
Information from Income Statement					
Total Revenue (TR)					
Profits Before Taxes (PBT)					
Cash Flow Information					
Cash Flow from Operating Activities					

*Refer to ITT 15 for the exchange rate

4.4.2 Sources of Finance

Specify sources of finance to meet the cash flow requirements on works currently in progress and for future contract commitments.

No.	Source of finance	Amount (Kenya Shilling equivalent)
1		
2		
3		

4.4.3 Financial documents

The Tenderer and its parties shall provide copies of financial statements for *2*years pursuant Section III, Evaluation and Qualifications Criteria, Sub-factor 3.1. The financial statements shall:

(a) reflect the financial situation of the Tenderer or in case of JV member, and not an affiliated entity (such as parent company or group member).

(b) be independently audited or certified in accordance with local legislation.

(c) be complete, including all notes to the financial statements.

(d) correspond to accounting periods already completed and audited.

☐ Attached are copies of financial statements[1] for the *2*years required above; and complying with the requirements

[1] If the most recent set of financial statements is for a period earlier than 12 months from the date of Tender, the reason for this should be justified.

4.5 FORM FIN – 3.2:

Average Annual Construction Turnover

Tenderer's Name: _____

Date: _____

JV Member's Name: NOT APPLICABLE

ITT No.37(7) b, iii and title:

	Annual turnover data (construction only)		
Year	**Amount Currency**	**Exchange rate**	**Kenya Shilling equivalent**
……. [indicate year]	Kshs …….. [insert amount and indicate currency]		Kshs ……..
Average Annual Construction Turnover *	Kshs …….		Kshs ……

* See Section III, Evaluation and Qualification Criteria, Sub-Factor 3.2.

4.6 FORM FIN – 3.3:

Financial Resources

Specify proposed sources of financing, such as liquid assets, unencumbered real assets, lines of credit, and other financial means, net of current commitments, available to meet the total construction cash flow demands of the subject contract or contracts as specified in Section III, Evaluation and Qualification Criteria

Financial Resources		
No.	**Source of financing**	**Amount (Kenya Shilling equivalent)**
1		Kshs ……
2		Kshs ……
3		Kshs …….

4.7 FORM FIN – 3.4:

Current Contract Commitments / Works in Progress

Tenderers and each member to a JV should provide information on their current commitments on all contracts that have been awarded, or for which a letter of intent or acceptance has been received, or for contracts approaching completion, but for which an unqualified, full completion certificate has yet to be issued.

Current Contract Commitments					
	Name of Contract	Procuring Entity's Contact Address, Tel,	Value of Outstanding Work [Current Kenya Shilling /month Equivalent]	Estimated Completion Date	Average Monthly Invoicing Over Last Six Months [Kenya Shilling /month)]
1			Kshs …….		
2			Kshs …….		
3					
4					
5					

Signature:

Stamp and Date: (day month year):

4.8 FORM EXP - 4.1

General Construction Experience

Tenderer's Name: _____

Date: _____

JV Member's Name: _____

ITT No. and title: _____

Page _____of _____pages

Starting Year	Ending Year	Contract Identification	Role of Tenderer
…….	…….	Contract name: …… …… Brief Description of the Works performed by the Tenderer: ……... …… Amount of contract: ……... Name of Procuring Entity: …….. …….. Address: …… …….	
		Contract name: …… …….. Brief Description of the Works performed by the Tenderer: …… …… Amount of contract: …… Name of Procuring Entity: …… …… Address: …….	

		……..	
		Contract name: ……... …… Brief Description of the Works performed by the Tenderer: ……. …… Amount of contract: …… Name of Procuring Entity: …….. ……. Address: ……. ……	

4.9 FORM EXP - 4.2(a)

Specific Construction and Contract Management Experience

Tenderer's Name: _____

Date: _____

JV Member's Name: NOT APPLICABLE

ITT No. and title: _____

Similar Contract No…… ……	Information…… ……			
Contract Identification: ……				
Award date:				
Completion date: ……..				
Role in Contract: …….	Prime Contractor ☐	Member in JV ☐	Management Contractor ☐	Sub-contractor ☐
Total Contract Amount			Kshs…….	
If member in a JV or sub-contractor, specify participation in total Contract amount	*N/A*			
Procuring Entity's Name:				
Address: Telephone/fax number E-mail:	…….. …….. ……			

4.10 FORM EXP - 4.2 (a) (cont.)

Specific Construction and Contract Management Experience (cont.)

Similar Contract No.	Information
Description of the similarity in accordance with Sub-Factor 4.2(a) of Section III:	
1. Amount	
2. Physical size of required works items	
3. Complexity	
4. Methods/Technology	
5. Construction rate for key activities	
6. Other Characteristics	

4.11 FORM EXP - 4.2(b)

Construction Experience in Key Activities

Tenderer's Name: _____

Date: _____

Tenderer's JV Member Name: *NOT APPLICABLE*

Sub-contractor's Name[2] (as per ITT 34): _____

ITT No. and title: _____

All Sub-contractors for key activities must complete the information in this form as per ITT 34 and Section III, Evaluation and Qualification Criteria, Sub-Factor 4.2.

1. Key Activity No One: _ _____

	Information			
Contract Identification				
Award date				
Completion date				
Role in Contract	Prime Contractor ☐	Member in JV ☐	Management Contractor ☐	Sub-contractor ☐
Total Contract Amount			**Kenya Shilling**	
Quantity (Volume, number or rate of production, as applicable) performed under the contract per year or part of the year	Total quantity in the contract (i)		Percentage participation (ii)	Actual Quantity Performed (i) x (ii)
Year 1				
Year 2				
Year 3				
Year 4				
Year 4				
Procuring Entity's Name:				
Address: Telephone/fax number E-mail:				

[2] If applicable

	Information
Description of the key activities in accordance with Sub-Factor 4.2(b) of Section III:	

2. Activity No. Two

OTHER FORMS

5. FORM OF TENDER

INSTRUCTIONS TO TENDERERS

i) The Tenderer must prepare this Form of Tender on stationery with its letterhead clearly showing the Tenderer's complete name and business address.

ii) All italicized text is to help Tenderer in preparing this form.

iii) Tenderer must complete and sign CERTIFICATE OF INDEPENDENT TENDER DETERMINATION and the SELF DECLARATION OF THE TENDERER attached to this Form of Tender.

iv) The Form of Tender shall include the following Forms duly completed and signed by the Tenderer.

- Tenderer's Eligibility- Confidential Business Questionnaire
- Certificate of Independent Tender Determination
- Self-Declaration of the Tenderer

Date of this Tender submission: ……. *[Insert date (as day, month and year) of Tender submission]*

Request for Tender No.: …… *[insert identification*]

Name and description of Tender …… *[Insert as per ITT)*

Alternative No.: ……[*insert identification No if this is a Tender for an alternative*]

To: KENYA URBAN ROADS AUTHORITY [*insert complete name of Procuring Entity*]

Dear Sirs,

1. In accordance with the Conditions of Contract, Specifications, Drawings and Bills of Quantities for the execution of the above named Works, we, the undersigned offer to construct and complete the Works and remedy any defects therein for the sum of Kenya Shillings [*[Amount in figures]*_____ _____*[amount in words]* Kshs_____.

   The above amount includes foreign currency amount (s) of [*state figure or a percentage and currency*] [figures] NOT APPLICABLE [words] NOT APPLICABLE.

   The percentage or amount quoted above does not include provisional sums, and only allows not more than two foreign currencies.

2. We undertake, if our tender is accepted, to commence the Works as soon as is reasonably possible after the receipt of the Project Manager's notice to commence, and to complete the whole of the Works comprised in the Contract within the time stated in the Special Conditions of Contract.

3. We agree to adhere by this tender until ……..*[Insert date],* and it shall remain binding upon us and may be accepted at any time before that date.

4. Unless and until a formal Agreement is prepared and executed this tender together with your written acceptance thereof, shall constitute a binding Contract between us. We further understand that you are not bound to accept the lowest or any tender you may receive.

5. We, the undersigned, further declare that:
   i) *No reservations:* We have examined and have no reservations to the tender document, including Addenda issued in accordance with ITT 28;
   ii) *Eligibility:* We meet the eligibility requirements and have no conflict of interest in accordance with ITT 3 and 4;
   iii) *Tender-Securing Declaration:* We have not been suspended nor declared ineligible by the Procuring Entity based on execution of a Tender-Securing or Proposal-Securing Declaration in the Procuring Entity's Country in accordance with ITT 19.8;

iv) *Conformity:* We offer to execute in conformity with the tendering documents and in accordance with the implementation and completion specified in the construction schedule, the following Works: *[insert a brief description of the Works];*

v) *Tender Price:* The total price of our Tender, excluding any discounts offered in item 1 above is: *[Insert one of the options below as appropriate]*

Vi Option 1, in case of one lot: Total price is: [*insert the total price of the Tender in words and figures, indicating the various amounts and the respective currencies*]; Or

Option 2, in case of multiple lots:

a) Total price of each lot [*insert the total price of each lot in words and figures, indicating the various amounts and the respective currencies*]; and

b) Total price of all lots (sum of all lots) [*insert the total price of all lots in words and figures, indicating the various amounts and the respective currencies*];

vii) *Discounts:* The discounts offered and the methodology for their application are:

viii) The discounts offered are: [*Specify in detail each discount offered.*]

ix) The exact method of calculations to determine the net price after application of discounts is shown below: [*Specify in detail the method that shall be used to apply the discounts*];

x) *Tender Validity Period:* Our Tender shall be valid for the period specified in TDS 18.1 (as amended, if applicable) from the date fixed for the Tender submission deadline specified in TDS 22.1 (as amended, if applicable), and it shall remain binding upon us and may be accepted at any time before the expiration of that period;

xi) *Performance Security:* If our Tender is accepted, we commit to obtain a Performance Security in accordance with the Tendering document;

xii) *One Tender Per Tender:* We are not submitting any other Tender(s) as an individual Tender, and we are not participating in any other Tender(s) as a Joint Venture member or as a subcontractor, and meet the requirements of ITT 3.4, other than alternative Tenders submitted in accordance with ITT 13.3;

xiii) *Suspension and Debarment:* We, along with any of our subcontractors, suppliers, Project Manager, manufacturers, or service providers for any part of the contract, are not subject to, and not controlled by any entity or individual that is subject to, a temporary suspension or a debarment imposed by the Public Procurement Regulatory Authority or any other entity of the Government of Kenya, or any international organization.

xiv) *State-owned enterprise or institution:* [*select the appropriate option and delete the other*] [*We are not a state-owned enterprise or institution*] / [*We are a state-owned enterprise or institution but meet the requirements of ITT 3.8*];

xv) *Commissions, gratuities, fees:* We have paid, or will pay the following commissions, gratuities, or fees with respect to the tender process or execution of the Contract: *[insert complete name of each Recipient, its full address, the reason for which each commission or gratuity was paid and the amount and currency of each such commission or gratuity].*

Name of Recipient	Address	Reason	Amount

(If none has been paid or is to be paid, indicate "none.")

xvi) Binding Contract: We understand that this Tender, together with your written acceptance thereof included in your Letter of Acceptance, shall constitute a binding contract between us, until a formal contract is prepared and executed;

xvii) Not Bound to Accept: We understand that you are not bound to accept the lowest evaluated cost Tender, the Most Advantageous Tender or any other Tender that you may receive;

xviii) Fraud and Corruption: We hereby certify that we have taken steps to ensure that no person acting for us or on our behalf engages in any type of Fraud and Corruption;

xix) Collusive practices: We hereby certify and confirm that the tender is genuine, non-collusive and made with the intention of accepting the contract if awarded. To this effect we have signed the "Certificate of Independent Tender Determination" attached below.

xx) We undertake to adhere by the Code of Ethics for Persons Participating in Public Procurement and Asset Disposal, copy available from www.ppra.go.ke during the procurement process and the execution of any resulting contract.

xxi) We, the Tenderer, have completed fully and signed the following Forms as part of our Tender:
   a) Tenderer's Eligibility; Confidential Business Questionnaire – to establish we are not in any conflict to interest.
   b) Certificate of Independent Tender Determination – to declare that we completed the tender without colluding with other tenderers.
   c) Self-Declaration of the Tenderer – to declare that we will, if awarded a contract, not engage in any form of fraud and corruption.
   d) Declaration and commitment to the Code of Ethics for Persons Participating in Public Procurement and Asset Disposal

Further, we confirm that we have read and understood the full content and scope of fraud and corruption as informed in **"Appendix 1- Fraud and Corruption"** attached to the Form of Tender.

Name of the Tenderer: *[*insert complete name of person signing the Tender*]

Name of the person duly authorized to sign the Tender on behalf of the Tenderer: **[*insert complete name of person duly authorized to sign the Tender*]

Title of the person signing the Tender: [*insert complete title of the person signing the Tender*]

Signature of the person named above: [*insert signature of person whose name and capacity are shown above*] **Date signed** [*insert date of signing*] day of [*insert month*], [*insert year*]

Date signed_____day of_____, _____

Notes
** In the case of the Tender submitted by joint venture specify the name of the Joint Venture as Tenderer*
*** Person signing the Tender shall have the power of attorney given by the Tenderer to be attached with the Tender.*

A. TENDERER'S ELIGIBILITY- CONFIDENTIAL BUSINESS QUESTIONNAIRE

Instruction to Tenderer

Tender is instructed to complete the particulars required in this Form, *one form for each entity if Tender is a JV.* Tenderer is further reminded that it is an offence to give false information on this Form.

(a) **Tenderer's details**

	ITEM	DESCRIPTION
1	Name of the Procuring Entity	……
2	Reference Number of the Tender	……..
3	Date and Time of Tender Opening	……..
4	Name of the Tenderer	……..
5	Full Address and Contact Details of the Tenderer.	1. Country : 2. City : 3. Location : 4. Building : 5. Floor : 6. Postal Address : 7. Name and email of contact person.
6	Current Trade License Registration Number and Expiring date	……..
7	Name, country and full address (*postal and physical addresses, email, and telephone number*) of Registering Body/Agency	
8	Description of Nature of Business	……
9	Maximum value of business which the Tenderer handles.	Kshs ……..
10	State if Tenders Company is listed in stock exchange, give name and full address (*postal and physical addresses, email, and telephone number*) of state which stock exchange	

General and Specific Details

b) Sole Proprietor, provide the following details.

Name in full NOT APPLICABLE Age Nationality
Country of Origin Citizenship

c) Partnership, provide the following details.

	Names of Partners	Nationality	Citizenship	% Shares owned
1				
2				
3				

d) Registered Company, provide the following details.

i) Private or public Company_____

ii) State the nominal and issued capital of the Company_____

Nominal Kenya Shillings (Equivalent).....

iii) Issued Kenya Shillings (Equivalent).....

iv) Give details of Directors as follows.

	Names of Director	Nationality	Citizenship	% Shares owned
1				
2				
3				

(e) DISCLOSURE OF INTEREST- Interest of the Firm in the Procuring Entity.

i) Are there any person/persons in …… …… (*Name of Procuring Entity)* who has/have an interest or relationship in this firm? Yes/No……

If yes, provide details as follows.

	Names of Person	Designation in the Procuring Entity	Interest or Relationship with Tenderer
1			
2			
3			

ii) Conflict of interest disclosure

	Type of Conflict	Disclosure YES OR NO	If YES provide details of the relationship with Tenderer
1	Tenderer is directly or indirectly controls, is controlled by or is under common control with another tenderer.		
2	Tenderer receives or has received any direct or indirect subsidy from another tenderer.		
3	Tenderer has the same legal representative as another tenderer		
4	Tender has a relationship with another tenderer, directly or through common third parties, that puts it in a position to influence the tender of another tenderer, or influence the decisions of the Procuring Entity regarding this tendering process.		
5	Any of the Tenderer's affiliates participated as a consultant in the preparation of the design or technical specifications of the works that are the subject of the tender.		
6	Tenderer would be providing goods, works, non-consulting services or consulting services during implementation of the contract specified in this Tender Document.		
7	Tenderer has a close business or family relationship		

	Type of Conflict	Disclosure YES OR NO	If YES provide details of the relationship with Tenderer
	with a professional staff of the Procuring Entity who are directly or indirectly involved in the preparation of the Tender document or specifications of the Contract, and/or the Tender evaluation process of such contract.		
8	Tenderer has a close business or family relationship with a professional staff of the Procuring Entity who would be involved in the implementation or supervision of the such Contract.		
9	Has the conflict stemming from such relationship stated in item 7 and 8 above been resolved in a manner acceptable to the Procuring Entity throughout the tendering process and execution of the Contract.		

f) Certification

On behalf of the Tenderer, I certify that the information given above is complete, current and accurate as at the date of submission.

Full Name_____

Title or Designation_____

_____ _____

(Signature) *(Date)*

B. CERTIFICATE OF INDEPENDENT DETERMINATION

I, the undersigned, in submitting the accompanying Letter of Tender to the _____[Name of Procuring Entity] for:_____[Name and number of tender] in response to the request for tenders made by:_____[Name of Tenderer] do hereby make the following statements that I certify to be true and complete in every respect:

I certify, on behalf of_____[Name of Tenderer] that:

1. I have read and I understand the contents of this Certificate;

2. I understand that the Tender will be disqualified if this Certificate is found not to be true and complete in every respect;

3. I am the authorized representative of the Tenderer with authority to sign this Certificate, and to submit the Tender on behalf of the Tenderer;

4. For the purposes of this Certificate and the Tender, I understand that the word "competitor" shall include any individual or organization, other than the Tenderer, whether or not affiliated with the Tenderer, who:
   a) has been requested to submit a Tender in response to this request for tenders;
   b) could potentially submit a tender in response to this request for tenders, based on their qualifications, abilities or experience;

5. The Tenderer discloses that [check one of the following, as applicable:
   a) The Tenderer has arrived at the Tender independently from, and without consultation, communication, agreement or arrangement with, any competitor;
   b) the Tenderer has entered into consultations, communications, agreements or arrangements with one or more competitors regarding this request for tenders, and the Tenderer discloses, in the attached document(s), complete details thereof, including the names of the competitors and the nature of, and reasons for, such consultations, communications, agreements or arrangements;

6. In particular, without limiting the generality of paragraphs (5)(a) or (5)(b) above, there has been no consultation, communication, agreement or arrangement with any competitor regarding:
   a) prices;
   b) methods, factors or formulas used to calculate prices;
   c) the intention or decision to submit, or not to submit, a tender; or
   d) the submission of a tender which does not meet the specifications of the request for Tenders; except as specifically disclosed pursuant to paragraph (5)(b) above;

7. In addition, there has been no consultation, communication, agreement or arrangement with any competitor regarding the quality, quantity, specifications or delivery particulars of the works or services to which this request for tenders relates, except as specifically authorized by the procuring authority or as specifically disclosed pursuant to paragraph (5)(b) above;

8. the terms of the Tender have not been, and will not be, knowingly disclosed by the Tenderer, directly or indirectly, to any competitor, prior to the date and time of the official tender opening, or of the awarding of the Contract, whichever comes first, unless otherwise required by law or as specifically disclosed pursuant to paragraph (5)(b) above.

Name: ……..

Title: …….

Signature:…….

Date _____

[Name, title and signature of authorized agent of Tenderer and Date].

C. SELF - DECLARATION FORMS

FORM SD1

SELF DECLARATION THAT THE PERSON/TENDERER IS NOT DEBARRED IN THE MATTER OF THE PUBLIC PROCUREMENTAND ASSET DISPOSALACT 2015.

I, …… of Post Office Box …….. being a resident of

…….. In the Republic of ……. do hereby make a statement as follows: -

1. THAT I am the Company Secretary/ Chief Executive/Managing Director/Principal Officer/Director of ……...…….. *(Insert name of the Company)* who is a Bidder in respect of Tender

   No. ……..

   …….. For ……. *(Insert tender title/description)* for

   ……..……. *(insert name of the Procuring entity)* and duly authorized and competent to make this statement.

2. THAT the aforesaid Bidder, its Directors and subcontractors have not been debarred from participating in procurement proceeding under Part IV of the Act.

3. THAT what is deponed to herein above is true to the best of my knowledge, information and belief.

   ……..……. ……. …… (Title)
   (Signature) (Date)

   Bidder Official Stamp

FORM SD2

SELF DECLARATION THAT THE PERSON/TENDERER WILL NOT ENGAGE IN ANY CORRUPT OR FRAUDULENT PRACTICE

I, ……. of P. O. Box .....……. being a resident of

…….. In the Republic of ……. do hereby make a statement as follows: -

1. THAT I am the Chief Executive/Managing Director/Principal Officer/Director of …….....
2. *(Insert name of the Company)* who is a Bidder in respect of Tender No. ….....……. for …….. *(Insert tender title/description)* for ……..…… *(Insert name of the Procuring entity)* and duly authorized and competent to make this statement.

3. THAT the aforesaid Bidder, its servants and/or agents /subcontractors will not engage in any corrupt or fraudulent practice and has not been requested to pay any inducement to any member of the Board, Management, Staff and/or employees and/or agents of …..……... *(insert name of the Procuring entity)* which is the procuring entity.

4. THAT the aforesaid Bidder, its servants and/or agents /subcontractors have not offered any inducement to any member of the Board, Management, Staff and/or employees and/or agents of ……. (name of the procuring entity)

5. THAT the aforesaid Bidder will not engage /has not engaged in any corrosive practice with other bidders participating in the subject tender

6. THAT what is deponed to herein above is true to the best of my knowledge information and belief.

……	……..……	.....……
(Title)	(Signature)	(Date)

Bidder's Official Stamp

DECLARATION AND COMMITMENT TO THE CODE OF ETHICS

I …… (person) on behalf of *(Name of the Business/ Company/Firm*) …… declare that I have read and fully understood the contents of the Public Procurement & Asset Disposal Act, 2015, Regulations and the Code of Ethics for persons participating in Public Procurement and Asset Disposal and my responsibilities under the Code.

I do hereby commit to abide by the provisions of the Code of Ethics for persons participating in Public Procurement and Asset Disposal.

Name of Authorized signatory……. Sign…….....

Position…….

Office address… P. O. Box …….. Telephone……

E-mail……

Name of the Firm/Company…….

Date…….

(Company Seal/ Rubber Stamp where applicable)

Witness

Name ……..

Sign..... Date……

D. APPENDIX 1 - FRAUD AND CORRUPTION

(Appendix 1 shall not be modified)

1. Purpose

2. The Government of Kenya's Anti-Corruption and Economic Crime laws and their sanction's policies and procedures, Public Procurement and Asset Disposal Act *(no. 33 of 2015)* and its Regulation, and any other Kenya's Acts or Regulations related to Fraud and Corruption, and similar offences, shall apply with respect to Public Procurement Processes and Contracts that are governed by the laws of Kenya.

3. Requirements

The Government of Kenya requires that all parties including Procuring Entities, Tenderers, (applicants/proposers), Consultants, Contractors and Suppliers; any Sub-contractors, Sub-consultants, Service providers or Suppliers; any Agents (whether declared or not); and any of their Personnel, involved and engaged in procurement under Kenya's Laws and Regulation, observe the highest standard of ethics during the procurement process, selection and contract execution of all contracts, and refrain from Fraud and Corruption and fully comply with Kenya's laws and Regulations as per paragraphs 1.1 above.

Kenya's public procurement and asset disposal act *(no. 33 of 2015)* under Section 66 describes rules to be followed and actions to be taken in dealing with Corrupt, Coercive, Obstructive, Collusive or Fraudulent practices, and Conflicts of Interest in procurement including consequences for offences committed. A few of the provisions noted below highlight Kenya's policy of no tolerance for such practices and behavior: -

1) a person to whom this Act applies shall not be involved in any corrupt, coercive, obstructive, collusive or fraudulent practice; or conflicts of interest in any procurement or asset disposal proceeding;
2) A person referred to under subsection (1) who contravenes the provisions of that sub-section commits an offence;
3) Without limiting the generality of the subsection (1) and (2), the person shall be: -
   a) disqualified from entering into a contract for a procurement or asset disposal proceeding; or
   b) if a contract has already been entered into with the person, the contract shall be voidable;
4) The voiding of a contract by the procuring entity under subsection (7) does not limit any legal remedy the procuring entity may have;
5) An employee or agent of the procuring entity or a member of the Board or committee of the procuring entity who has a conflict of interest with respect to a procurement: -
   a) shall not take part in the procurement proceedings;
   b) shall not, after a procurement contract has been entered into, take part in any decision relating to the procurement or contract; and
c) shall not be a subcontractor for the bidder to whom was awarded contract, or a member of the group of bidders to whom the contract was awarded, but the subcontractor appointed shall meet all the requirements of this Act.
6) An employee, agent or member described in subsection (1) who refrains from doing anything prohibited under that subsection, but for that subsection, would have been within his or her duties shall disclose the conflict of interest to the procuring entity;
7) If a person contravenes subsection (1) with respect to a conflict of interest described in subsection (5)(a) and the contract is awarded to the person or his relative or to another person in whom one of them had a direct or indirect pecuniary interest, the contract shall be terminated and all costs incurred by the public entity shall be made good by the awarding officer. Etc.

In compliance with Kenya's laws, regulations and policies mentioned above, the Procuring Entity:

a) Defines broadly, for the purposes of the above provisions, the terms set forth below as follows:

i) "corrupt practice" is the offering, giving, receiving, or soliciting, directly or indirectly, of anything of value to influence improperly the actions of another party;

ii) "fraudulent practice" is any act or omission, including misrepresentation, that knowingly or recklessly misleads, or attempts to mislead, a party to obtain financial or other benefit or to avoid an obligation;

iii) "collusive practice" is an arrangement between two or more parties designed to achieve an improper purpose, including to influence improperly the actions of another party;

iv) "coercive practice" is impairing or harming, or threatening to impair or harm, directly or indirectly, any party or the property of the party to influence improperly the actions of a party;

v) "obstructive practice" is:

- deliberately destroying, falsifying, altering, or concealing of evidence material to the investigation or making false statements to investigators in order to materially impede investigation by Public Procurement Regulatory Authority (PPRA) or any other appropriate authority appointed by Government of Kenya into allegations of a corrupt, fraudulent, coercive, or collusive practice; and/or threatening, harassing, or intimidating any party to prevent it from disclosing its knowledge of matters relevant to the investigation or from pursuing the investigation; or
- acts intended to materially impede the exercise of the PPRA's or the appointed authority's inspection and audit rights provided for under paragraph 2.3 e. below.

b) Defines more specifically, in accordance with the above procurement Act provisions set forth for fraudulent and collusive practices as follows:

"fraudulent practice" includes a misrepresentation of fact in order to influence a procurement or disposal process or the exercise of a contract to the detriment of the procuring entity or the tenderer or the contractor, and includes collusive practices amongst tenderers prior to or after tender submission designed to establish tender prices at artificial non-competitive levels and to deprive the procuring entity of the benefits of free and open competition.

c) Rejects a proposal for award[1] of a contract if PPRA determines that the firm or individual recommended for award, any of its personnel, or its agents, or its sub-consultants, sub-contractors, service providers, suppliers and/ or their employees, has, directly or indirectly, engaged in corrupt, fraudulent, collusive, coercive, or obstructive practices in competing for the contract in question;

d) Pursuant to the Kenya's above stated Acts and Regulations, may sanction or recommend to appropriate authority (ies) for sanctioning and debarment of a firm or individual, as applicable under the Acts and Regulations;

e) Requires that a clause be included in Tender documents and Request for Proposal documents requiring (i) Tenderers (applicants/proposers), Consultants, Contractors, and Suppliers, and their Sub-contractors, Sub-consultants, Service providers, Suppliers, Agents personnel, permit the PPRA or any other appropriate authority appointed by Government of Kenya to inspect[2] all accounts, records and other documents relating to the procurement process, selection and/or contract execution, and to have them audited by auditors appointed by the PPRA or any other appropriate authority appointed by Government of Kenya; and

f) Pursuant to Section 62 of the above Act, requires Applicants/Tenderers to submit along with their Applications/Tenders/Proposals a "Self-Declaration Form" as included in the procurement document declaring that they and all parties involved in the procurement process and contract execution have not engaged/will not engage in any corrupt or fraudulent practices.

Name of Authorized Signatory……..

Designation ……...

Signature, Date and Stamp……..

---

[1]*For the avoidance of doubt, a party's ineligibility to be awarded a contract shall include, without limitation, (i) applying for pre-qualification, expressing interest in a consultancy, and tendering, either directly or as a nominated sub-contractor, nominated consultant, nominated manufacturer or supplier, or nominated service provider, in respect of such contract, and (ii) entering into an addendum or amendment introducing a material modification to any existing contract.*

[2] *Inspections in this context usually are investigative (i.e., forensic) in nature. They involve fact-finding activities undertaken by the Investigating Authority or persons appointed by the Procuring Entity to address specific matters related to investigations/audits, such as evaluating the veracity of an allegation of possible Fraud and Corruption, through the appropriate mechanisms. Such activity includes but is not limited to: accessing and examining a firm's or individual's financial records and information, and making copies thereof as relevant; accessing and examining any other documents, data and information (whether in hard copy or electronic format) deemed relevant for the investigation/audit, and making copies thereof as relevant; interviewing staff and other relevant individuals; performing physical inspections and site visits; and obtaining third party verification of information.*

FORM OF TENDER SECURITY (TENDER BOND)

[The Surety shall fill in this Tender Bond Form in accordance with the instructions indicated.]

BOND NO. _____

1. BY THIS BOND _____ *[name of tenderer]* as Principal (hereinafter called "the Principal"), and _____, **authorized to transact business in KENYA**, as Surety (hereinafter called "the Surety"), are held and firmly bound unto _____ as Obligee (hereinafter called "the Procuring Entity") in the sum of *[amount of Bond]*_____/, for the payment of which sum, well and truly to be made, we, the said Principal and Surety, bind ourselves, our successors and assigns, jointly and severally, firmly by these presents.

2. WHEREAS the Principal has submitted or will submit a written Tender to the Procuring Entity dated the_____day of_____ , for the supply of _____ *[name of Contract]* (hereinafter called the "Tender").

3. NOW, THEREFORE, THE CONDITION OF THIS OBLIGATION is such that if the Principal:
   a) has withdrawn its Tender during the period of Tender validity set forth in the Principal's Letter of Tender ("the Tender Validity Period"), or any extension thereto provided by the Principal; or
   b) having been notified of the acceptance of its Tender by the Procuring Entity during the Tender Validity Period or any extension thereto provided by the Principal; (i) failed to execute the Contract agreement; or
   (ii) has failed to furnish the Performance Security, in accordance with the Instructions to tenderers ("ITT") of the Procuring Entity's Tendering document.

   Then the Surety undertakes to immediately pay to the Procuring Entity up to the above amount upon receipt of the Procuring Entity's first written demand, without the Procuring Entity having to substantiate its demand, provided that in its demand the Procuring Entity shall state that the demand arises from the occurrence of any of the above events, specifying which event(s) has occurred.

4. The Surety hereby agrees that its obligation will remain in full force and effect up to and including the date 30 days after the date of expiration of the Tender Validity Period set forth in the Principal's Letter of Tender or any extension thereto provided by the Principal.

5. IN TESTIMONY WHEREOF, the Principal and the Surety have caused these presents to be executed in their respective names this_____day of_____20_____.

Principal:_____
Corporate Seal (where appropriate)

(Signature)

(Printed name and title)

Surety: _____

_____

(Signature)

(Printed name and title)

TENDER-SECURING DECLARATION FORM

[The Bidder shall complete this Form in accordance with the instructions indicated]

Date: ..... *[insert date* as *day, month and year) of Tender Submission]*
Tender No.: …… *[insert number of tendering process]*
To:. ……. *[insert complete name of Purchaser]*

I/We, the undersigned, declare that:

1. I/We understand that, according to your conditions, bids must be supported by a Tender-Securing Declaration.

2. I/We accept that I/we will automatically be suspended from being eligible for tendering in any contract with the Purchaser for the period of time of [insert number of months or years] starting on [insert date], if we are in breach of our obligation(s) under the bid conditions, because we – (a) have withdrawn our tender during the period of tender validity specified by us in the Tendering Data Sheet; or (b) having been notified of the acceptance of our Bid by the Purchaser during the period of bid validity, (i) fail or refuse to execute the Contract, if required, or (ii) fail or refuse to furnish the Performance Security, in accordance with the instructions to tenders.

3. I/We understand that this Tender Securing Declaration shall expire if we are not the successful Tenderer(s), upon the earlier of:
   a) our receipt of a copy of your notification of the name of the successful Tenderer; or
   b) thirty days after the expiration of our Tender.

4. I/We understand that if I am/we are/in a Joint Venture, the Tender Securing Declaration must be in the name of the Joint Venture that submits the bid, and the Joint Venture has not been legally constituted at the time of bidding, the Tender Securing Declaration shall be in the names of all future partners as named in the letter of intent.

   Signed: …….. Capacity / title (director or partner or sole proprietor, etc.) …….…….....…….

   Name: …….. Duly authorized to sign the bid for and on behalf of: ……. *[Insert complete name of Tenderer]*

   Dated on …….……. day of …….…….…….…… *[Insert date of signing]* Seal or stamp

Appendix to Tender

Schedule of Currency requirements

Summary of currencies of the Tender for_____*[insert name of Section of the Works]*

Name of currency	*Amounts payable*
Local currency:	
Foreign currency #1:	
Foreign currency #2:	
Foreign currency #3:	
Provisional sums expressed in local currency _____	[To be entered by the Procuring Entity]

8. COMMITMENT TO PROVIDE BENEFICIAL OWNERSHIP INFORMATION

I, ……..……. of P. O. Box ……. being a resident of …….. in the Republic of ……. do hereby make a state as follows: -

1. THAT I am the Chief Executive Officer/Managing Director/Principal Officer/Director/ Authorized Officer of…..……..... *(Insert name of the Company)* who is a Bidder in respect of **Tender No……..** for ……. (Insert tender title/description) advertised by …… *(Insert name of the Procuring entity)* (the **Procuring Entity**) and duly authorized and competent to make this statement.

2. THAT I do hereby commit to provide Beneficial Ownership Information in conformity with the Beneficial Ownership Disclosure Form to the procuring entity upon receipt of notification of award in the event we are the successful tenderer in this subject procurement proceeding. I fully understand that failure to furnish the procuring entity with the Beneficial Ownership Information within the period provided for in the letter of award shall invalidate my award and may considered as refusal to enter into a written contract which is punishable under Section 41(1) (e) of the Public Procurement and Asset Disposal Act, 2015.

Name of the Firm/Company……..

Registered Physical Address of the Company……...

Posta Address……

Telephone No…… Mobile Number …….....

Email Address ……...

Name of Authorised Signatory……..

Designation ……...

Signatory……

Date……...…….

Witnessed by …….

Signature of Witness……..

Date……

BENEFICIAL OWNERSHIP DISCLOSURE FORM

INSTRUCTIONS TO TENDERERS: DELETE THIS BOX ONCE YOU HAVE COMPLETED THE FORM

This Beneficial Ownership Disclosure Form ("Form") is to be completed by the successful tenderer pursuant to Regulation 4 of the Companies (Beneficial Ownership Information) (Amendment) Regulations, 2022. In case of joint venture, the tenderer must submit a separate Form for each member. The beneficial ownership information to be submitted in this Form shall be current as of the date of its submission.

For the purposes of this Form, a Beneficial Owner of a Tenderer is any natural person who ultimately owns or controls the legal person (tenderer) or arrangements or a natural person on whose behalf a transaction is conducted, and includes those persons who exercise ultimate effective control over a legal person (Tenderer) or arrangement.

Tender Reference No.:_____[*insert identification no*] Name of the Tender Title/Description: _____*[insert name of the assignment]* to:__*[insert complete name of Procuring Entity]*

In response to the requirement in your notification of award dated_____*[insert date of notification of award]* to furnish additional information on beneficial ownership:_____*[select one option as applicable and delete the options that are not applicable]*

I) We here by provide the following beneficial ownership information.

Details of beneficial ownership

	Details of all Beneficial Owners		**% of shares a person holds in the company Directly or indirectly**	**% of voting rights a person holds in the company**	**Directly or indirectly having the right to appoint a majority of the board of the directors or an equivalent governing body of the Tenderer (Yes / No)**	**directly or indirectly exercises significant influence or control over the tenderer /company (Yes / No)**
	Full Name		Directly~~~~~~~~~~~ % of shares	Directly……. % of voting rights		
	National identity card number					

	Details of all Beneficial Owners		% of shares a person holds in the company Directly or indirectly	% of voting rights a person holds in the company	Directly or indirectly having the right to appoint a majority of the board of the directors or an equivalent governing body of the Tenderer (Yes / No)	directly or indirectly exercises significant influence or control over the tenderer /company (Yes / No)
1.	or Passport number		Indirectly---------- % of shares	Indirectly---------- % of voting rights		
	Personal Identification Number (where applicable)					
	Nationality					
	Date of birth *[dd/mm/yyyy]*					
	Postal address					
	Residential address					
	Telephone number					
	Email address					
	Occupation or profession					
2.	Full Name		Directly---------- % of shares Indirectly---------- % of shares	Directly……. % of voting rights Indirectly---------- % of voting rights		
	National identity card number or Passport number					
	Personal Identification Number (where applicable)					
	Nationality					
	Date of birth *[dd/mm/yyyy]*					
	Postal address					
	Residential address					
	Telephone number					
	Email address					
	Occupation or profession					

	Details of all Beneficial Owners		% of shares a person holds in the company Directly or indirectly	% of voting rights a person holds in the company	Directly or indirectly having the right to appoint a majority of the board of the directors or an equivalent governing body of the Tenderer (Yes / No)	directly or indirectly exercises significant influence or control over the tenderer /company (Yes / No)
3.						
e.t.c						

II) Am fully aware that beneficial ownership information above shall be reported to the Public Procurement Regulatory Authority together with other details in relation to contract awards and shall be maintained in the Government Portal, published and made publicly available pursuant to Regulation 5 of the Companies (Beneficial Ownership Information) (Amendment) Regulations, 2022

III) What is stated to herein above is true to the best of my knowledge, information and belief.

Name of the Tenderer: .....[insert complete name of the Tenderer]*_____

*Name of the person duly authorized to sign the Tender on behalf of the Tenderer: ** [insert complete name of person duly authorized to sign the Tender]*

Designation of the person signing the Tender: ..... [insert complete title of the person signing the Tender]

Signature of the person named above: ..... [insert signature of person whose name and capacity are shown above]

Date this ..... [insert date of signing] day of..... [Insert month], [insert year]

Bidder Official Stamp/ Company Seal.

PART II - WORK REQUIREMENTS

SECTION V - DRAWINGS

A list of drawings should be inserted here. The actual drawings including Site plans should be annexed in a separate booklet.

FIGURE C.1 - CULVERT ENTRY / EXIT STRUCTURE TYPES

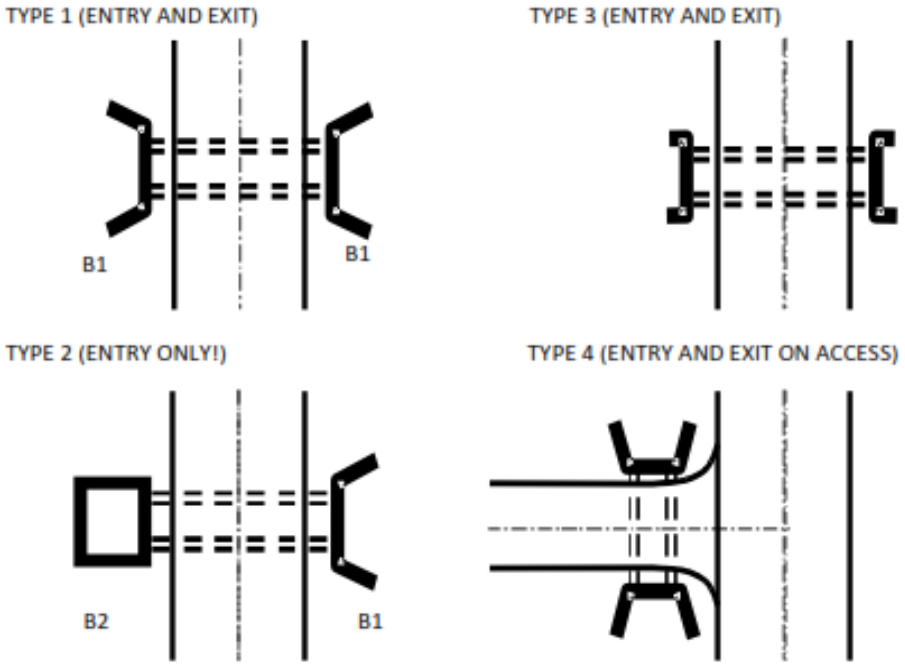

NOTE:

Coding system has been used in describing the standardised designs of the various culvert entry and exit structures. The code names consist of a number to specify shape and function as elaborated in above while the used construction materials are identified through an alphabetic symbol as follows:

A = Concrete block
B = Stone masonry
C = Dressed stones

An example code of "B2" would therefore stand for a drop inlet type structure to be built in stone masonry.

FIGURE C.2 - HEADWALL TYPE 1 (HEAD AND WINGWALLS)

DIMENSIONS			MATERIAL REQUIREMENTS									
PIPE DIAMETER (M)			TYPE A (CONCRETE BLOCKS)				TYPE B (STONE MASONRY)					
	DIMENSION	UNIT	450	600	900		450	600	900			
a	FOUNDATION	m	0.30	0.30	0.30		0.40	0.40	0.40			
B	FOUNDATION	M	0.30	0.30	0.40		0.30	0.30	0.40			
c	FOUNDATION		2.20	2.35	2.89		2.20	2.35	2.89			
d	APRON	m	1.00	1.00	1.20		1.00	1.00	1.20			
e	APRON	m	0.20	0.20	0.20		0.20	0.20	0.20			
f	WALL	m	0.20	0.20	0.20		0.40	0.40	0.40			
g	WALL	m	0.30	0.30	0.30		0.30	0.30	0.30			
h	WALL	m	1.15	1.15	1.39		1.15	1.15	1.39			
i	WALL	m	0.20	0.20	0.20		0.40	0.40	0.40			
k	APRON	m	1.05	1.20	1.50		1.05	1.20	1.50			
MATERIAL REQUIREMENT												
FOUNDATION (Concrete)		m^3	0.3	0.32	0.51		0.4	0.42	1.03			
HEAD/WINGWALLS (Concrete/Masonry)		m^3	0.4	0.47	0.67		0.8	0.93	1.35			
APRON (Concrete)		m^3	0.33	0.36	0.53		0.33	0.36	0.53			

CULVERT PIPES	
X-SECTION WIDTH	No. of Pipes
4.50	6.00
5.50	7.00
6.50	8.00

FIGURE C.3 - HEADWALL TYPE 2 (DROP INLET)

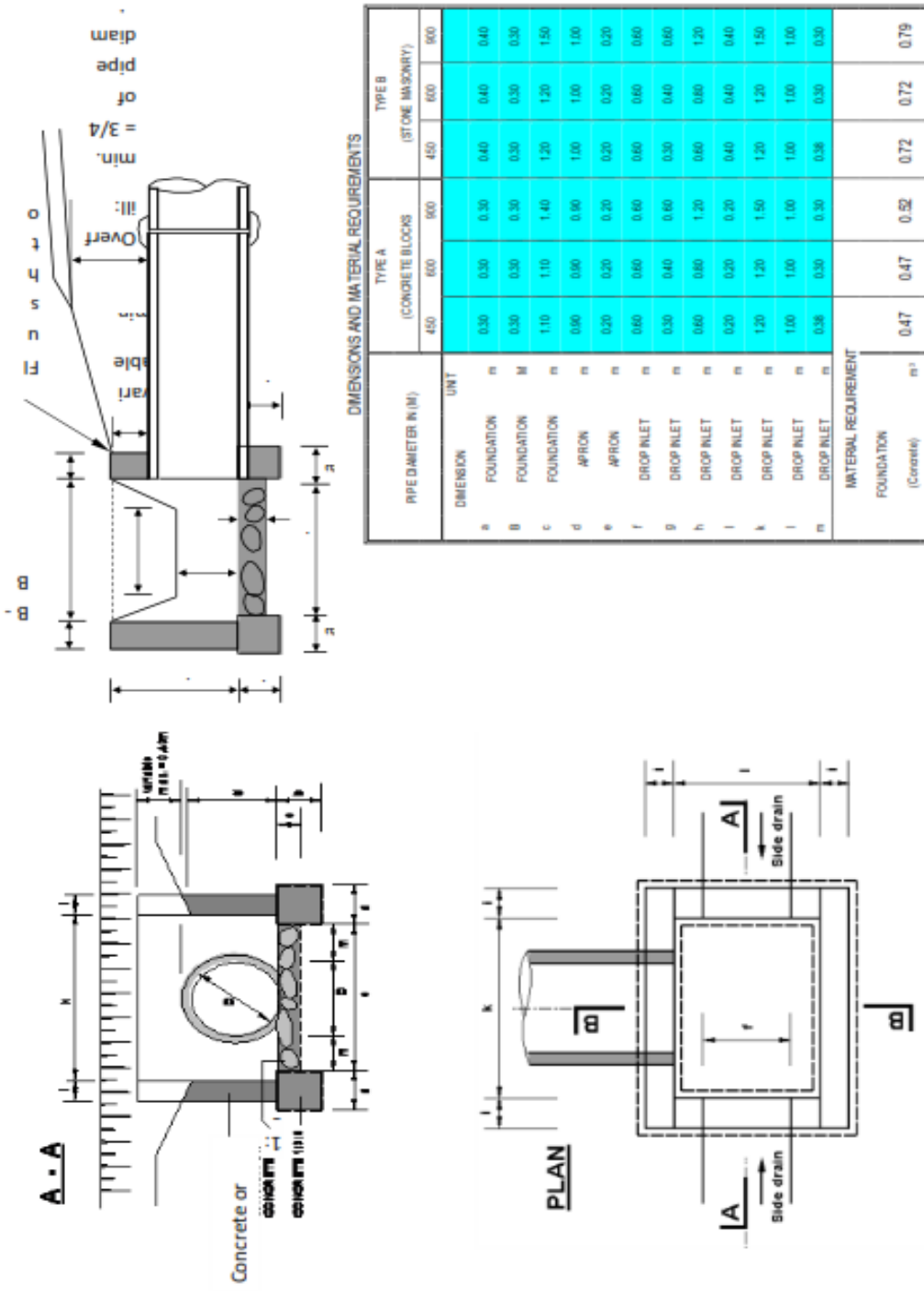

DIMENSIONS AND MATERIAL REQUIREMENTS

PIPE DIAMETER IN (M)			TYPE A (CONCRETE BLOCKS)			TYPE B (STONE MASONRY)		
	DIMENSION	UNIT	450	600	900	450	600	900
a	FOUNDATION	m	0.30	0.30	0.30	0.40	0.40	0.40
B	FOUNDATION	M	0.30	0.30	0.30	0.30	0.30	0.30
c	FOUNDATION	m	1.10	1.10	1.40	1.20	1.20	1.50
d	APRON	m	0.60	0.60	0.80	1.00	1.00	1.00
e	APRON	m	0.20	0.20	0.20	0.20	0.20	0.20
f	DROP INLET	m	0.60	0.60	0.60	0.60	0.60	0.60
g	DROP INLET	m	0.30	0.40	0.60	0.30	0.40	0.60
h	DROP INLET	m	0.60	0.80	1.20	0.60	0.80	1.20
I	DROP INLET	m	0.20	0.20	0.20	0.40	0.40	0.40
k	DROP INLET	m	1.20	1.20	1.50	1.20	1.20	1.50
l	DROP INLET	m	1.00	1.00	1.00	1.00	1.00	1.00
m	DROP INLET	m	0.36	0.30	0.30	0.36	0.30	0.30
MATERIAL REQUIREMENT								
FOUNDATION (Concrete)		m^3	0.47	0.47	0.52	0.72	0.72	0.79
HEADWINGWALLS (Concrete&Masonry)		m^3	0.53	0.69	1.11	1.24	1.63	2.61
APRON (Concrete)		m^3	0.24	0.24	0.30	0.24	0.24	0.30

FIGURE C.4 - HEADWALL TYPE 3A (CONCRETE BLOCK HEADWALLS)

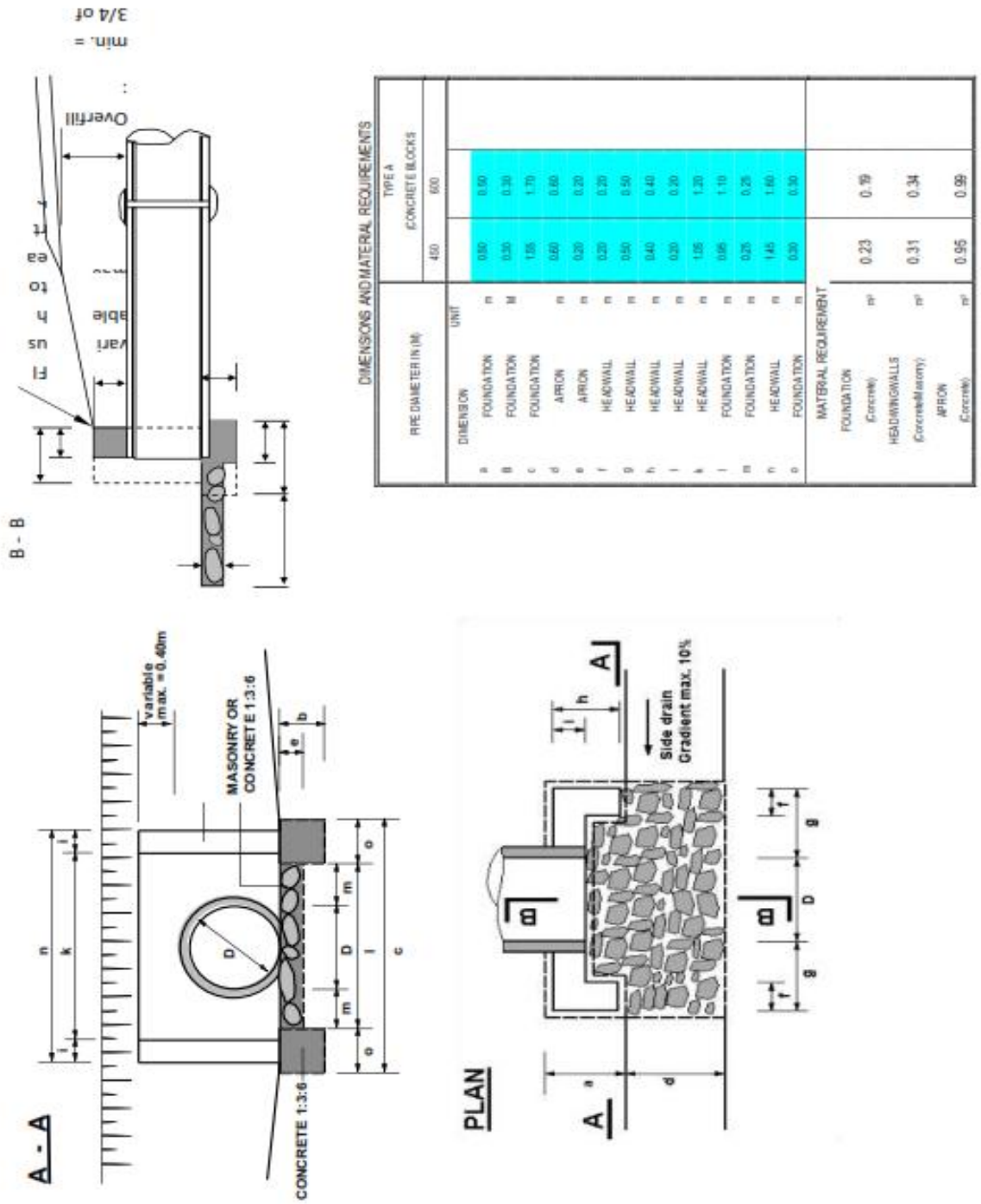

FIGURE C.5 - HEADWALL TYPE 3B (STONE MASONRY HEADWALLS)

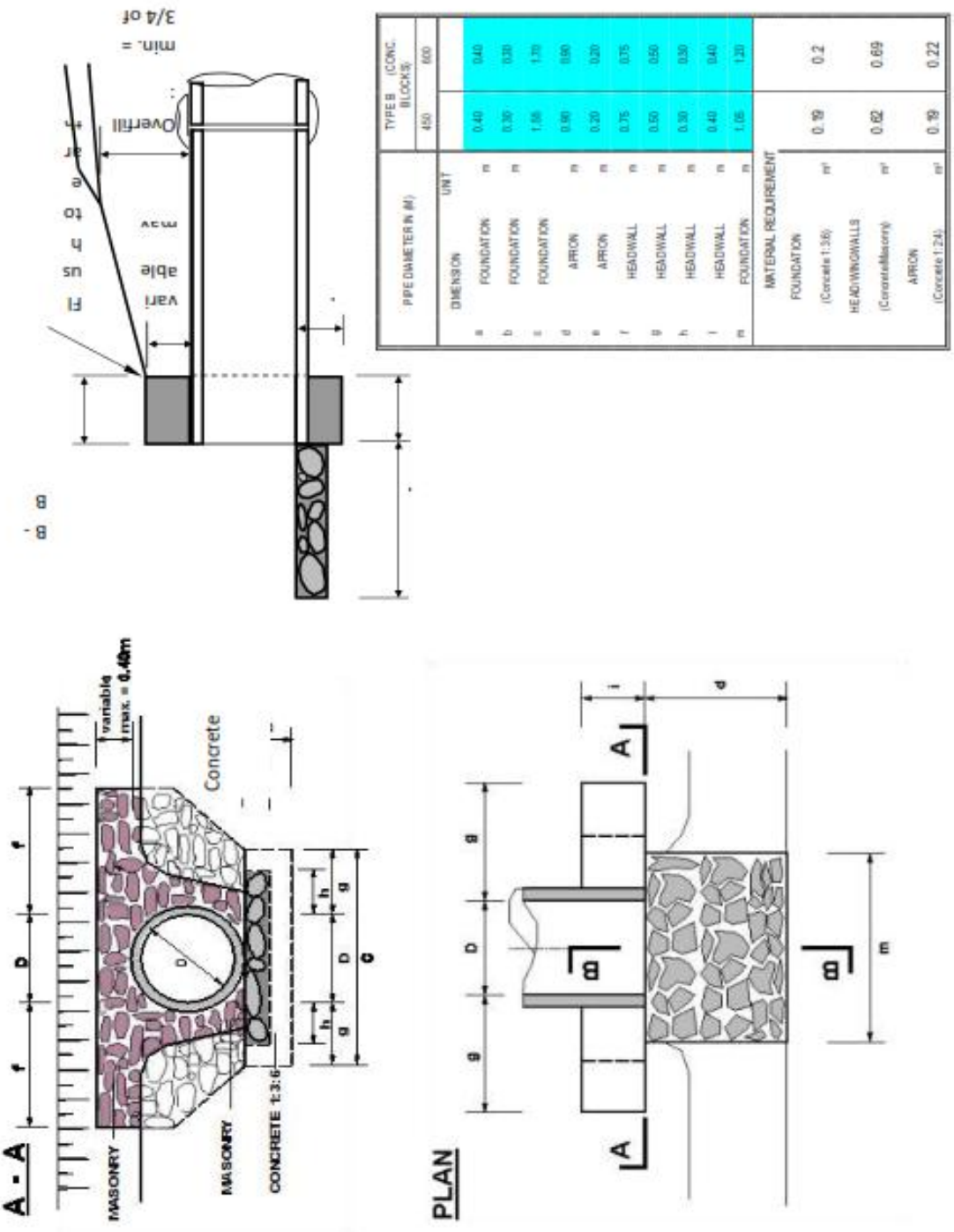

PIPE DIAMETER IN (M)			TYPE B (CONC. BLOCKS)	
			450	600
DIMENSION	UNIT			
a	FOUNDATION	m	0.40	0.40
b	FOUNDATION	m	0.30	0.30
c	FOUNDATION		1.65	1.70
d	APRON	m	0.60	0.60
e	APRON	m	0.20	0.20
f	HEADWALL	m	0.75	0.75
g	HEADWALL	m	0.50	0.50
h	HEADWALL	m	0.30	0.30
i	HEADWALL	m	0.40	0.40
m	FOUNDATION	m	1.05	1.20
MATERIAL REQUIREMENT				
FOUNDATION (Concrete 1:3:6)		m³	0.19	0.2
HEADWINGWALLS (Concrete/Masonry)		m³	0.62	0.69
APRON (Concrete 1:2:4)		m³	0.19	0.22

FIGURE C.6 - HEADWALL TYPE 4 (FOR ACCESS CULVERTS)

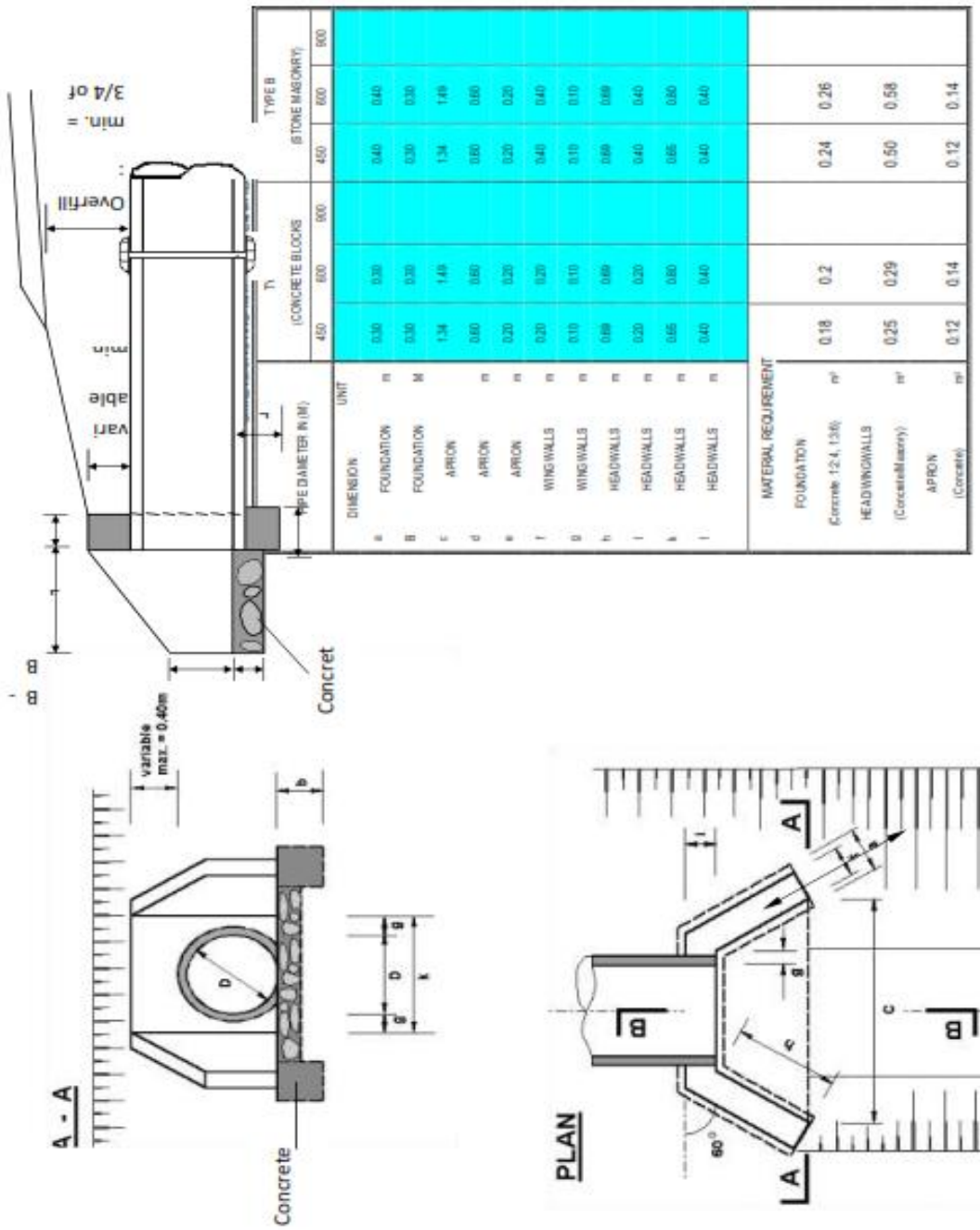

DIMENSION	UNIT	PIPE DIAMETER IN (M)	(CONCRETE BLOCKS)			TYPE B (STONE MASONRY)		
			450	600	900	450	600	900
a FOUNDATION	m		0.30	0.30		0.40	0.40	
B FOUNDATION	M		0.30	0.30		0.30	0.30	
c APRON			1.34	1.49		1.34	1.49	
d APRON	m		0.60	0.60		0.60	0.60	
e APRON	m		0.20	0.20		0.20	0.20	
f WINGWALLS	m		0.20	0.20		0.40	0.40	
g WINGWALLS	m		0.10	0.10		0.10	0.10	
h HEADWALLS	m		0.69	0.69		0.69	0.69	
i HEADWALLS	m		0.20	0.20		0.40	0.40	
k HEADWALLS	m		0.66	0.80		0.66	0.80	
l HEADWALLS	m		0.40	0.40		0.40	0.40	
MATERIAL REQUIREMENT								
FOUNDATION (Concrete 1:2:4, 1:3:6)	m³		0.18	0.2		0.24	0.26	
HEADWINGWALLS (ConcreteMasonry)	m³		0.25	0.29		0.50	0.58	
APRON (Concrete)	m³		0.12	0.14		0.12	0.14	

FIGURE C.7- BEDDING AND HAUNCH PROFILES TYPES I & II

PROFILE I

(CONCRETE)

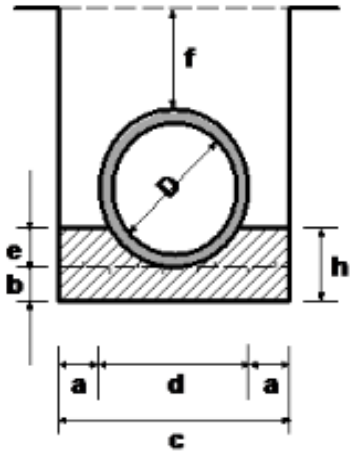

Diameter (D)	450 (mm)	600 (mm)	900 (mm)
	Dimensions in (m)		
a	0.15	0.2	0.2
b	0.1	0.15	0.15
c	0.86	1.12	1.48
d	0.56	0.72	1.08
e	0.14	0.18	0.27
f (min.)	0.34	0.45	0.68
g	-	-	-
h	0.24	0.33	0.42
i	-	-	-
Concrete	Volume in (m3/m)		
	0.16	0.3	0.48
Application	- Fair subgrade condition; - Overfill > ¾ Diameter; - Seasonal waterflow only.		
Remarks	- Use gravel material for back/ overfill.		

PROFILE II

(CONCRETE)

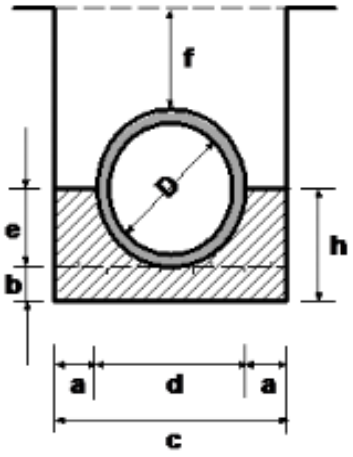

450 (mm)	600 (mm)	900 (mm)
Dimensions in (m)		
0.15	0.2	0.2
0.1	0.15	0.15
0.86	1.12	1.48
0.56	0.72	1.08
0.28	0.36	0.54
0.34	0.45	0.68
-	-	-
0.38	0.51	0.69
-	-	-
Volume in (m3/m)		
0.2	0.37	0.56
- Fair to poor subgrade Condition; - Overfill > ¾ Diameter; - Seasonal waterflow only.		
- Use gravel material for back/ overfill.		

FIGURE C.8 - BEDDING AND HAUNCH PROFILES TYPES III & IV

PROFILE III

(CONCRETE)

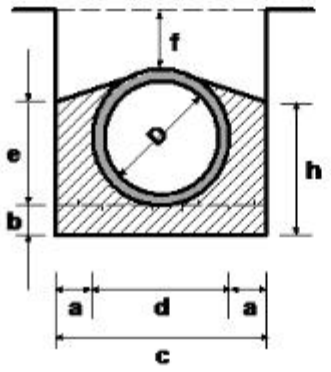

Diameter (D)	450 (mm)	600 (mm)	900 (mm)
	Dimensions in (m)		
a	0.15	0.2	0.2
b	0.1	0.15	0.15
c	0.86	1.12	1.48
d	0.56	0.72	1.08
e	0.42	0.54	0.81
f (min.)	0.23	0.3	0.45
g	-	-	-
h	0.52	0.69	0.96
i	-	-	-
Concrete	Volume in (m3/m)		
	0.26	0.47	0.71
Application	- Fair subgrade condition; - Overfill > ¾ Diameter; - Seasonal waterflow only.		
Remarks	- Use gravel material for back/ overfill.		

PROFILE IV

(CONCRETE)

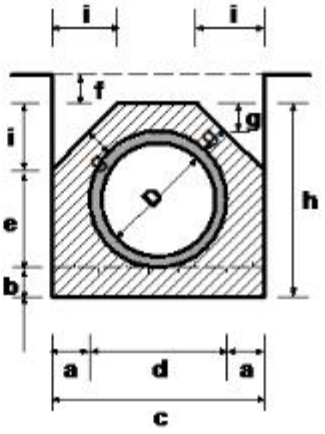

450 (mm)	600 (mm)	900 (mm)
Dimensions in (m)		
0.15	0.2	0.2
0.1	0.15	0.15
0.86	1.12	1.48
0.56	0.72	1.08
0.46	0.52	0.78
0.15	0.15	0.15
0.15	0.15	0.15
0.81	1.02	1.38
0.28	0.35	0.45
Volume in (m3/m)		
0.37	0.61	0.92
- Fair to poor subgrade Condition; - Overfill > ¾ Diameter; - Seasonal waterflow only.		
- Use gravel material for back/ overfill.		

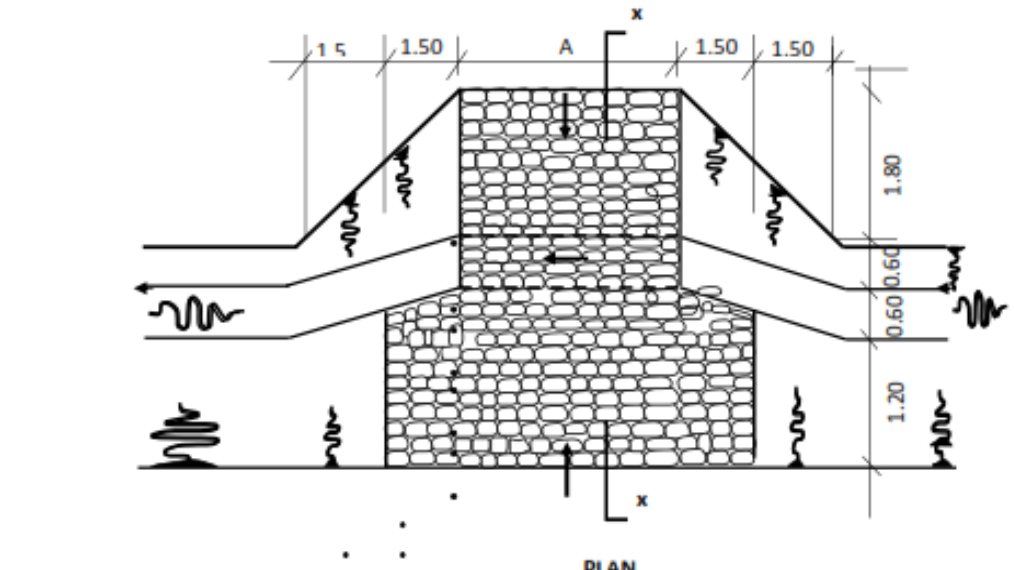

PLAN

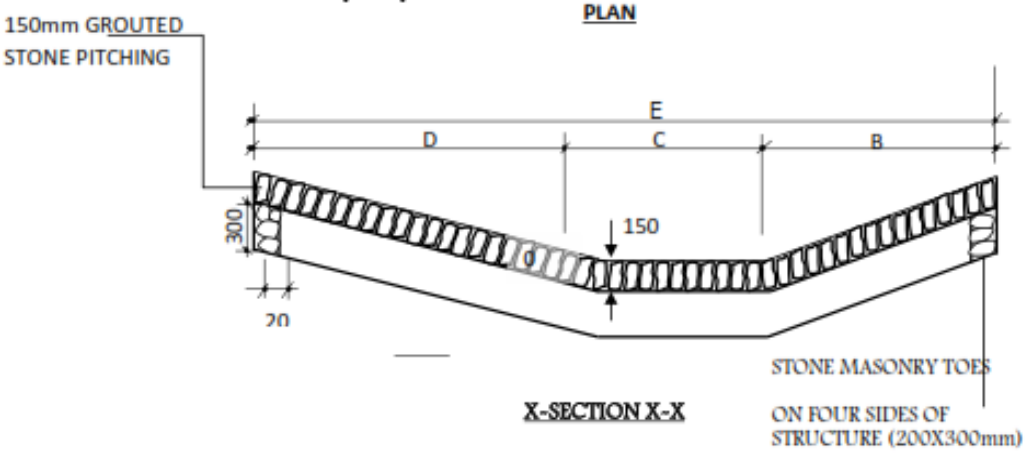

X-SECTION X-X

QUANTITIES TABLE								
Cross section	DIMENSIONS					RED Excavation (m3)	Stone masonry (m³)	150mm Grouted stone pitching (m3)
	A	B	C	D	E			
A	4000	1600	600	1600	4200	7.50	1.30	21.75
	6000	1600	600	1600	4200	10.00	1.60	30.15
B	4000	1400	400	1600	3600	7.00	1.20	18.30
	6000	1400	400	1600	3600	9.00	1.50	25.50

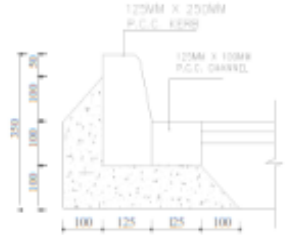

P.C.C. KERB AND CHANNEL

SCALE 1:10

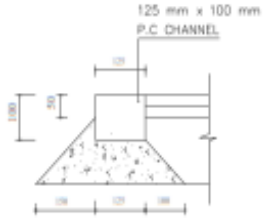

P.C.C. CHANNEL AND HAUNCH

SCALE 1:10

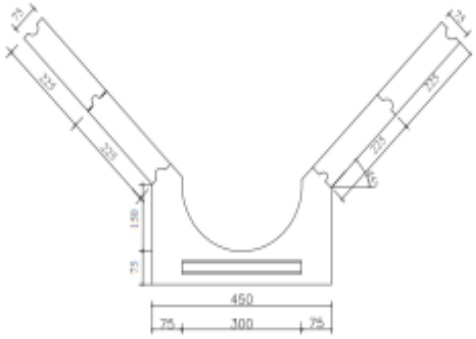

DIA. 300MM INVERT BLOCK DRAIN
SIDE SLABS VARIES

SCALE 1:10

SECTION VI ~ SPECIFICATIONS

Notes for preparing Specifications

1. Specifications must be drafted to present a clear and precise statement of the required standards of materials, and workmanship for tenderers to respond realistically and competitively to the requirements of the Procuring Entity and ensure responsiveness of tenders. The Specifications should require that all materials, plant, and other supplies to be permanently incorporated in the Works be new, unused, of the most recent or current models, and incorporating all recent improvements in design and materials unless provided otherwise in the Contract. Where the Contractor is responsible for the design of any part of the permanent Works, the extent of his obligations must be stated.

2. Specifications from previous similar projects are useful and may not be necessary to re-write specifications for every Works Contract.

3. There are considerable advantages in standardizing **General Specifications** for repetitive Works in recognized public sectors, such as highways, urban housing, irrigation and water supply. The General Specifications should cover all classes of workmanship, materials and equipment commonly involved in constructions, although not necessarily to be used in a particular works contract. Deletions or addenda should then adapt the General Specifications to the particular Works.

4. Care must be taken in drafting Specifications to ensure they are not restrictive. In the Specifications of standards for materials, plant and workmanship, existing Kenya Standards should be used as much as possible, otherwise recognized international standards may also be used.

5. The Procuring Entity should decide whether technical solutions to specified parts of the Works are to be permitted. Alternatives are appropriate in cases where obvious (and potentially less costly) alternatives are possible to the technical solutions indicated in tender documents for certain elements of the Works, taking into consideration the comparative specialized advantage of potential tenderers.

6. The Procuring Entity should provide a description of the selected parts of the Works with appropriate reference to Drawings, Specifications, Bills of Quantities, and Design or Performance criteria, stating that the alternative solutions shall be at least structurally and functionally equivalent to the basic design parameters and Specifications.

7. Such alternative solutions shall be accompanied by all information necessary for a complete evaluation by the Procuring Entity, including drawings, design calculations, technical specifications, breakdown of prices, proposed construction methodology, and other relevant details. Technical alternatives permitted in this manner shall be considered by the Procuring Entity each on its own merits and independently of whether the tenderer has priced the item as described in the Procuring Entity's design included with the tender documents.

SECTION VI –A: STANDARD SPECIFICATIONS

Standard Specifications refers to the **Standard Specifications for Roads and Bridge Construction, published by the Ministry of Transport and Communications of the Republic of Kenya, 1986 Edition** and shall be applicable in this contract.

.

SECTION 5: SPECIAL SPECIFICATIONS

SECTION 1 – GENERAL

101 SPECIAL SPECIFICATIONS

Special specification is supplementary to the Standard Specifications and the two must be read in conjunction. In any case where there appears to be conflict between the two then the Special Specifications will take precedence.

102 LOCATION OF CONTRACT

The project roads are located in Migori Urban Area of Migori County. The length is as shown below.

S/NO	Road Name	Road Length(km)
1.	Savanna Junction – Ambira Hospital Road	1.05
2.	Access to Ugunja KMTC	0.35
	TOTAL	**1.40**

103 EXTENT OF CONTRACT

The works to be executed under the Contract comprise mainly of but not limited to the following: ~

1. **Road Works**
- Site clearance
- Subgrade works
- Sub base works
- Cement stabilized base
- Installation of Road Kerbs
- Laying AC Type 1 for surfacing
- Construction of walkway using paving blocks
- Installation of Road Signs
- Undertaking Road Marking
- Passage of Traffic
- Undertaking Cross Cutting issues

2. **Drainage Works**
- Excavation of drains
- Installation of culverts
- Drain Lining using IBD

3. **Maintenance of passage of traffic through and around the works.**
4. **Maintenance of works during Contract Period – Defect Liability Period shall be 3 months**

Any other activity not listed above in either category but deemed to be necessary by the Engineer, shall be subject to the Engineer's formal instructions within the mode of payment stipulated either by day works or on a measured basis.

105 ORDER OF EXECUTION OF WORKS

In addition to Clause 105 of the Standard Specification the Contractor shall carry out the Works such that a continuous and consecutive output of fully completed work is achieved.

107 TAKING OVER CERTIFICATE

The minimum length of the road for which a certificate will be issued under clause 48 of the conditions of Contract shall be the whole length of each section of the road substantially completed including road signs and road marking.

109 NOTICE OF OPERATIONS

Add the following sub- Clause.

Notification Terms
It shall be the Contractor's responsibility to notify the Engineer when any item of works scheduled are completed and ready for approval, and the contractor shall give sufficient notice to allow control tests to be performed.

Explosive and Blasting

(a) The requirements of the Laws of Kenya governing explosives and other requirements and regulations of Government of Kenya and other authorities shall be complied with.
(b) No explosives of any kind shall be used without prior written consent of the Engineer.

The Contractor shall be solely responsible for the provision, handling, storage and transporting of all explosives, ancillary materials and all other items of related kind whatsoever required for blasting.

117 HEALTH, SAFETY AND ACCIDENTS

Add the following:

In addition to providing, equipping and maintaining adequate first aid stations throughout the works in accordance with the laws of Kenya, the contractor shall provide and maintain on site during the duration of the Contract, a fully equipped dispensary. This shall be with a qualified Clinical Officer / Nurse who shall offer the necessary medical advice on HIV and related diseases to the Engineer's and Contractor's Site staff. The Contractor shall allow for this in the rates and be responsible for all site welfare arrangements at his own cost.

120 PROTECTION OF EXISTING WORKS AND SERVICES

The Contractor shall acquaint himself with the position of all existing services such as sewers, water drains, cables for electricity and telephone, lighting and telephone poles, water mains, etc., before commencing any excavation or other work likely to affect the existing services.

The cost of all plant, equipment and materials, labour, technical and professional staff, transport and the like necessary for determining the locations of existing services, including the making good of any damage caused to such services all to the satisfaction of the Engineer, shall be deemed to be included in the tender rates. No other payment shall be made for the costs of such operations, nor for the making good of damage caused thereby to the existing services.

The Contractor shall be held responsible for injury to existing structures, works or services and shall indemnify and keep indemnified the Employer against any claims in this respect (including consequential damages).

121 DIVERSION OF SERVICES

(a) The Contractor shall acquaint himself with the location of all existing services such as telephone lines, electricity cables, water pipes, sewers etc., before execution of any works that may affect the services. The cost of determining the location of the

existing services together with making good or repairing of any damage caused all to the satisfaction of the Engineer shall be included in the BID rates.

(b) Subject to the agreement with the Engineer, the Contractor shall be responsible for removal of alteration and relocation of existing services.

(c) The Contractor shall indemnify the Employer against claims originating from damage to existing services or works.

123 LIAISON WITH GOVERNMENT AND POLICE OFFICIALS

The Contractor shall keep in close touch with the Police and the other Government officials of the area regarding their requirements in the control of traffic or other matters, and shall provide all assistance or facilities, which may be required by such officials in the execution of their duties.

124 LAND FOR ALL CAMPS SITES AND FOR THE CONTRACTOR'S OWN PURPOSES, INCLUDING TEMPORARY WORKS.

Notwithstanding Clause 124 of the Standard Specification all requirements of land for temporary works and construction purposes shall be to the approval of the Engineer but the Contractor will make all necessary arrangements with the property owners concerned and pay all charges arising therefrom. On or before completion of the Contract, the Contractor shall remove all temporary works and shall restore all such land to the condition in which it was immediately prior to the occupation thereof as far as is reasonable and practicable. No separate payment will be made to the Contractor on account of these items and the Contractor must make due allowance for them in his rates.

Notwithstanding Clause 120 of the Standard Specifications, the Contractor shall be required to appoint competent surveyors who will liaise with the Engineer on matters related to the demarcation of the existing road reserve, site measurements, removal and reinstatement of existing services.

128 STORAGE OF MATERIALS

All materials shall be stored on Site in a manner approved by the Engineer and the Contractor shall carefully protect from the weather all work and materials which may be affected thereby.

129 TEST CERTIFICATES

When instructed by the Engineer the Contractor shall submit certificates of test from the suppliers of materials and goods required in connection with the works as the Engineer may require.

Such certificates shall certify that the materials or goods concerned have been tested in accordance with the requirements of the specifications and shall give the results of all the tests carried out. The Contractor shall provide adequate means of identifying the materials and goods delivered to the site with the corresponding certificates.

131 SIGNBOARDS

The Contractor shall provide and erect publicity signs on the site as stated in the BOQ. The Engineer shall, as shown in the Drawings, direct the minimum dimensions and thickness of the steel framework and sheet. The framework and sheet shall be prepared and painted black, while the ring at the top of the supporting frames shall be painted white. The wordings and KURA's logo shall be printed on backlit sticker paper resistant to the effects of weather using reflectorised paint or material approved by the Engineer. The sticker shall be placed on both sides of the board. The colours, fonts and heights of the letters shall be as indicated on the typical drawings and as directed by the Engineer.

132 OFFICE FOR THE RESIDENT ENGINEER, SURVEY EQUIPMENT AND FURNITURE

132.1 ENGINEER'S REPRESENTATIVE OFFICE

The contractor, when instructed, shall for the duration of the Contract, furnish and equip Resident engineer's office located at the KURA's Regional offices. The room to be occupied by the Engineer's Representative and its front office shall be provided with a floor carpet to be approved by the Engineer. The windows shall be fitted with curtains and blinders.

A telephone shall also be provided for the Resident Engineer's office for his exclusive use. All the charges and fees related to the installation and maintenance of the telephone shall be deemed to have been included in the rates for providing and maintaining the Office. The Contractor will be reimbursed, separately, the cost of operating the telephone under appropriate bill item in the BoQ.

The offices shall be provided with day and night watchmen and security lights, the cost of which shall be deemed to have been included in the rates for the offices.

The Contractor may be instructed by the Engineer under clause 58 of the General Conditions of Contract to make payments of general receipted accounts for such items as stationery, stores, furniture and equipment, claims and allowances for supervision personnel and any miscellaneous claims or the Engineer may direct the Contractor to purchase or pay for the above. The Contractor will, on provision of receipts, be paid under appropriate bill items in the BoQ.

The survey equipment to be provided would include:

1. Engineer's automatic level Wild NAK 2 or similar	2No
2.Total station reading 1" with tripod and setting on pole with datalogger and survey software to match Total Station Datalogger. Include data transfer program, and plotting modes, setting out calculations and Cogo facilities	1No
3. Levelling staff 5m. with levelling bubble Wild GNLE or similar	4No
4. 50m. steel band measuring tape	2No
5. 30m. linen measuring tape	2No.
6. 3m. aluminum straight edge	2No
7. 1m. stainless steel straight edge	1No
8. 100m. steel band tape	2No.
9. Draughtsman's stool	3No.
10. Complete set of highway curves	1No
11. Programmable scientific calculators FX 880P or equivalent	4No
12. Survey umbrella	2No.
13. Roll of tracing paper	10No
14. Protractor 360	2No
15. Graph paper A3 size	100No
16. Drawing table	2No.
17. Erasing shield	4No.
18. 3m. ranging rods	9No
19. Marker pens	30No.

The contractor may be directed to pay for stationery, equipment or reagents that are foresaid and also pay for servicing and repair of the laboratory equipment being used on the project.

The Contractor shall provide, install and maintain in a good state of repair, such survey and other equipment as listed for the duration of the contract.

Such equipment shall be of approved manufacture, and shall be made available to the Engineer for the Engineer's exclusive use throughout the Contract, not later than three

(3) weeks after the Engineer's order to supply. All equipment shall be ready to use and complete to perform the tests. The equipment shall revert to the Employer on completion of the Contract.
Any delays to the Contractor or the Contractor's activities caused by the Engineer being unable to perform survey work, field or laboratory tests due to the contractor's failure to supply and/or maintain the said equipment shall be deemed to have been caused entirely by the Contractors own actions, and any consequences of such delays shall be interpreted as such.

The payment to comply with this requirement is provided in the Bill of Quantities and ownership of all equipment paid for as instructed above shall revert to the Employer after the completion of the Works.

Failure by the Contractor to provide or maintain the equipment shall make him responsible to bear all costs that may be incurred as a result of the Engineer's staff using alternative means of communication, including delays in supervision and approval of Works by the Engineer.

132.3 COMMUNICATION FOR THE ENGINEEER

(a) Mobile phones

The Contractor shall provide, connect and maintain mobile phones for the exclusive use by the Engineer for the duration of the contract. The Contractor shall include for the cost of providing the mobile units complete with charger unit, "hands free" headset for each unit, connection to the network and all service charges applicable all as directed by the Engineer. The Contractor shall provide air-time with each mobile phone which shall be paid for under prime cost sum allowed for in the bills of quantities. The mobile telephones shall be WAP enabled with e-mail capabilities and integrated camera of a minimum of 3.0 mega pixels. Payment for these mobiles and associated costs is included in the Bill of Quantities, and ownership of mobile phones will revert to the Employer after completion of the Works.

(b) Internet and e-mail services

Where directed, the contractor shall provide 24 hours terrestrial or wireless internet connectivity with minimum throughput speed of 128kilobytes per second for the exclusive use by the Engineer, including all accessories and Terminal Equipment and pay for all associated installation, maintenance and usage charges throughout the duration of the contract.

The contractor shall allow for the provision and maintenance of internet connectivity and associated costs as per Appendix to item 1.17 of the Bills of Quantities.

137 ATTENDANCE UPON THE ENGINEER AND HIS STAFF

In addition to the staff stated in Clause 135, the following staff will be provided for the supervision of work: 1No. Artisans, 2No. Labourers, 1No. Office assistants, 2No. Lab attendants. Additional attendant staff, as required by the Engineer, shall be paid for under Item 01-80-030 of the Bill of Quantities.

138 VEHICLES AND DRIVERS FOR THE ENGINEER AND HIS STAFF AND METHOD OF PAYMENT

In addition to provisions of the Clause 138 of the Standard Specification, the Contractor shall when instructed, provide and maintain in good working condition for the exclusive use of the Engineer and his staff throughout the Contract, the following types and numbers of brand new vehicles or as specified. The Engineer shall approve the type of vehicles and confirm the number of each type to be provided. The Contractor shall insure the vehicles comprehensively for any licensed drivers and shall provide competent drivers during normal working hours and whenever required by the Engineer. The cost of provision of the vehicle shall be inclusive of the first 4,000 kilometers travelled in any month.
.
Should any vehicle supplied not be in roadworthy condition, the Contractor shall provide an acceptable equivalent replacement vehicle until such a time as the original vehicle is repaired to the satisfaction of the Engineer and returned for use.

(a) Type 1 Vehicles (Double Cabin 4WD Pick up)

Type 1 Vehicles should be four Wheel Drive (4WD), with power assisted steering, Double wishbone independent suspension at front axle and rigid axle with leaf springs at rear, diesel propelled engine

maximum 2,500 cc. The starting mileage of the vehicles shall not exceed 60,000km odometer reading. The vehicles should be fitted with other accessories below:

(a) Spare tyre and wheel jack;
(b) FM radio and CD player;
(c) Power Windows;
(d) Full Air-conditioning;
(e) Immobilizer and antitheft security system;
(e) Driver and passenger SRS Airbags;
(f) Canvas cover over the carrying deck at the back.

At the end of the contract, all type 1 vehicles shall revert to the Contractor.

(c) Type 2 Vehicles (station wagon/saloon)

Specifications for Type 2 Vehicles shall be station wagon/saloon vehicles; petrol propelled engine maximum 1,800 cc. The starting mileage of the vehicles shall not exceed 60,000km odometer reading. shall in addition be fitted with a fibre glass body or similar and two columns of sitting benches on the carting deck at the back.

The Contractor shall insure comprehensively the vehicles for any licensed drivers and shall provide competent drivers during normal working hours and whenever required by the Engineer.

At the end of the contract, all type 2 vehicles shall revert to the Contractor.

Payment of vehicle shall be per vehicle month in item 01-80-017/18 of the BOQ.

139 MISCELLANEOUS ACCOUNTS

The Contractor maybe instructed by the Engineer to make payments of general miscellaneous accounts for such items as stationary, stores and equipment and miscellaneous supervision personnel and claims or the Engineer may direct the Contractor to purchase or pay for the above. The Contractor will be paid on a prime cost basis plus a percentage for overheads and profits under appropriate items in the Bills of Quantities.

142 ENVIRONMENTAL PROTECTION

The Contractor shall comply with the Statutory Regulations in force in Kenya regarding environmental protection and waste disposal, and shall liaise with the National Environmental Management Agency (NEMA).

The Contractor shall ensure so far as is reasonably practicable and to the satisfaction of the Engineer; that the impact of the construction on the environment shall be kept to a minimum and that appropriate measures are taken to mitigate any adverse effects during the construction.

(a) The Contractor shall exercise care to preserve the natural landscape and shall conduct his construction operations so as to prevent any unnecessary destruction, scarring, or defacing of the natural surroundings in the vicinity of the work. Except where clearing is required for permanent works, all trees, native shrubbery, and vegetation shall be preserved and shall be protected from damage by the Contractor's construction operations and equipment. All unnecessary destruction, scarring, damage or defacing resulting from the Contractor's operations shall be repaired, replanted, reseeded or otherwise corrected as directed by the Engineer, and at the Contractor's expense.

(b) The Contractor shall ensure that measures are in place to control soil erosion and water pollution, by use of berms, dykes, silt fences, brush barriers, dams, sediment basins, filter mats, netting, gravel, mulches, grasses, slope drains, contour banks, and other erosion control devices and methods. Temporary erosion control provisions shall be coordinated with permanent erosion control features to assure economical, effective and continuous measures throughout the period of the works. The Contractor's attention is drawn to the requirements of Clause 502, in that works need to be progressively finished so that permanent vegetation can establish quickly to mitigate soil erosion and erosion of drains.

(c) The Contractor shall provide all the labour, equipment, materials, and means required and shall carry out proper and efficient measures wherever and as often as necessary to minimise the dust nuisance.

(d) The Contractor shall comply with all applicable Kenyan laws, orders and regulations concerning the prevention, control and abatement of excessive noise. Blasting, use of jackhammers, pile driving, rock crushing, or any other activities producing high-intensity impact noise may be performed at night only upon approval of the Engineer.

(e) Immediately after extraction of materials, all borrows pits shall be backfilled to the satisfaction of the Engineer. In particular borrow pits near the project road shall be backfilled in such a way that no water collects in them.

(f) Spilling of bitumen fuels Oils and other pollutants shall be cleared up.

(g) The Contractor's attention is drawn to the requirements of the Standard Specification in regard to the environment and in particular to the following clauses:

Clause 115: Construction Generally

Clause 116: Protection from Water

Clause 136: Removal of Camps

Clause 605: Safety and Public Health Requirements Clause

Clause 607: Site Clearance and Removal of Topsoil and Overburden

(h) No additional payment will be made to the Contractor to cover costs arising from the requirements for this Clause and the Contractor must include these costs in the rates inserted into the Bills of Quantities.

143 STAFF TRAINING

The Contractor shall allow for training of engineers, technicians and other support staff as may be instructed by the Engineer.

The payment of the allowances of such staff shall be made as instructed by the Engineer under the relevant provisions in the Bills of Quantities.

SECTION 2 - MATERIALS AND TESTING OF MATERIALS

All materials testing shall be in accordance with Section 2 of the Standard Specifications.

SECTION 3 - SETTING OUT & TOLERANCES

301 SETTING OUT

a) In addition to the provisions of clause 3.01(a) if the traverse points to be used for the setting out are close to the existing carriageway and interfere with construction works then the Contractor will have to relocate them to a location where they will not be disturbed. The co-ordinates and heights of all traverse points so located shall be listed and provided to the Engineer for checking and/or approval. Contractor shall also monument the new centreline every 200m along straight and all salient points along curves by a pin in the concrete beacon before commencement of any works.

The road reserve boundary posts shall have 12mm diameter steel pins embedded in concrete, 200mm long with 25mm exposed to the air, sticking out form its top surface. This pin shall be coordinated and heighted and result of the same shall be provided to the Engineer for approval. Cost of these works shall be included in the rates as no separate item has been provided.

Commencement of the works shall not be permitted until this basic survey data

has been provided and approved by the Engineer for at least 2 Kms of the road.

b) Detailed Setting Out

Reference pegs shall be 50mm by 50mm in section 600mm long driven 400mm firmly into ground and painted white above the ground. The offset from centre line shall be indicated by small nail 20mm to 25mm long with its head driven flush with the top of the peg.

Chainages, offset and reference elevation shall be clearly indicated to the sides of the peg to the satisfaction of the Engineer.

After cutting of benches and prior to commencement of earthworks or subgrade works, Contractor shall take cross-sections again and submit the copy of the same to Engineer for agreement. These cross-sections shall then be used as basis of measurement for all subsequent layers, unless otherwise stated.

SECTION 4- SITE CLEARANCE AND TOP SOIL STRIPPING

401 SITE CLEARANCE

Site Clearance shall be carried out as directed by the Engineer.

402 REMOVAL OF TOPSOIL

Topsoil shall include up to 200mm depth of any unsuitable material encountered in existing or newly constructed drains, drainage channels, and accesses.

403 REMOVAL OF STRUCTURES, FENCES AND OBSTRUCTIONS

When instructed by the Engineer, the Contractor shall demolish or remove any structure and payment for this shall be made on day works basis.

SECTION 5 - EARTHWORKS

504 PREPARATION PRIOR TO FORMING EMBANKMENT

Where benching is required for existing pavement to accommodate earthworks subgrade or subbase for widening the road, the rate for compaction of existing ground shall be deemed to cover this activity.

Excavation in the pavement of the existing road shall be kept dry. In the event of water penetrating the underlying layer, construction of the subsequent layers shall be postponed until the underlying layers are dry enough to accommodate the construction plant without deforming or otherwise showing distress.

Step construction shall be carried out per layer at the joint where excavating both vertically and perpendicular to the direction of the travel. The step shall be 500mm perpendicular to the direction of the travel and 150mm vertical unless otherwise instructed by the Engineer.

Special care shall be taken when compacting the new material at the joint ensuring that specified density is achieved.

505 CONSTRUCTION OF EMBANKMENTS

Only material approved by the Engineer shall be used for fill in embankments. Material with high swelling characteristics or high organic matter content and any other undesirable material shall not be used, unless specifically directed by the Engineer. Unsuitable material shall include:

(i) All material containing more than 5% by weight or organic matter (such as topsoil, material from swamps, mud, logs, stumps and other perishable material)

(ii) All material with a swell of more than 3% (such as black cotton soil)

(iii) All clay of plasticity index exceeding 50.

(iv) All material having moisture content greater than 105% of optimum moisture content (Standard Compaction)

Subgrade: Shall mean upper 300mm of earthworks either insitu or in fill and subgrade shall be provided for as part of earthworks operation and payment shall be made as "fill". The material for subgrade shall have a CBR of not less than 10% measured after a 4 day soak in a laboratory mix compacted to a dry density of 100% MDD (AASHTO T99) and a swell of less than 1%.

Subgrade repair: Where directed by the Engineer, any localized failure in the subgrade shall be repaired by filling in selected soft, hard or natural of minimum CBR 30% and compacted in accordance with clauses in the specifications applying to normal subgrade.

Embankment repair: Where directed by the Engineer, any localized filling in soft, hard or natural; selected material requirements shall be executed in accordance with Clause 505.

508 COMPACTION OF EARTHWORKS

At pipe culverts, all fill above ground level around the culverts shall be compacted to density of 100% MDD (AASHTO T.99) up to the level of the top of the pipes or top of the surround(s), if any and for a width equal to the internal diameter of the pipe on either side of the pipe(s) or surround(s) as applicable.

At locations adjacent to structures, all fill above ground level upto the underside of the subgrade shall be compacted to density of 105% MDD (AASHTO T.99). In case of fill around box culverts this should be carried out for the full width of the fill and for a length bounded by the vertical plane passing through the ends of the wingwalls.

Notwithstanding the provision of clause 503 of the standard Specification, Compaction of subgrade material (i.e. material immediately below formation) in cut areas shall not be carried out by the contractor in areas where the formation is formed in hard material, unless specific instructions to the contrary are issued by the Engineer.

Where improved sub-grade material shall be required, this shall be compacted and finished to the same standards and tolerances as those required for normal subgrade and clauses in the specifications applying to normal subgrade shall also apply.

511 BORROW PITS

The first part of the Standard Specification is amended as follows:-

Fill material which is required in addition to that provided by excavation shall be obtained from borrow pits to be located and provided by the Contractor but to the approval of the Engineer contrary to what has been stated.

517 MEASUREMENT AND PAYMENT

Notwithstanding the provisions of clause 517 of the standard specifications, the rate for compaction of fill in soft material shall allow for the requirements of clause 508 of the special specification and no extra payment shall be made for compaction around pipe culverts (100% MDD AASHTO T.99).

SECTION 6 ~ QUARRIES, BORROW PITS, STOCKPILES AND SPOIL AREAS

601 GENERAL

Notwithstanding any indications to the contrary in the Standard specification the Engineer will not make available to the Contractor any land for quarries, borrow pits, stockpiles and spoil areas, except for those areas in road reserves specifically approved by him.

The contractor will be entirely responsible for locating suitable sources of materials complying with the Standard and Special Specifications, and for the procurement, Wining, haulage to site of these materials and all costs involved therein. Similarly the contractor will be responsible for the provision and costs involved in providing suitable areas for stockpiling materials and spoil dumps. Should there be suitable sites for spoil

dumps or stockpiles within the road reserve forming the site of the works the Contractor may utilize these subject to the approval of the Engineer.

No additional payment will be made to the Contractor to cover costs arising from the requirements for this Clause and the Contractor must include these costs in the rates inserted into the Bills of Quantities.

602 MATERIAL SITES

The information on possible material sites is given for the general guidance of bidders. Bidders are however advised to conduct their own investigation as the information contained therein is neither guaranteed nor warranted

603 PROVISION OF LAND

Notwithstanding any indications to the contrary in the Standard specification the Engineer will not make available to the Contractor any land for quarries, borrow pits, stockpiles and spoil areas, except for those areas in road reserves specifically approved by him.

The contractor will be entirely responsible for locating suitable sources of materials complying with the Standard and Special Specifications, and for the procurement, Wining, haulage to site of these materials and all costs involved therein. Similarly the contractor will be responsible for the provision and costs involved in providing suitable areas for stockpiling materials and spoil dumps. Should there be suitable sites for spoil dumps or stockpiles within the road reserve forming the site of the works the Contractor may utilize these subject to the approval of the Engineer.

No additional payment will be made to the Contractor to cover costs arising from the requirements for this Clause and the Contractor must include these costs in the rates inserted into the Bills of Quantities.

605 SAFETY AND PUBLIC HEALTH REQUIREMENTS

In addition to clause 605, the contractor shall allow for professionals to conduct lectures to the workers regarding the spread of HIV/Aids.

SECTION 7 - EXCAVATION AND FILLING FOR STRUCTURES

703 EXCAVATION OF FOUNDATIONS FOR STRUCTURES

Unless otherwise instructed by the Engineer, all excavated surfaces in material other than hard material, on which foundations for structures shall be placed, shall be compacted to 100% MDD (AASHTO T.99) immediately before structures are constructed.

Paragraph 4, last line: - Replace "95%" with "100%".

707 BACKFILLING FOR STRUCTURES

Unless otherwise instructed by the Engineer, all backfilling material shall be compacted to a minimum of 100% MDD (AASHTO T.99).

709 EXCAVATIONS FOR RIVER TRAINING AND NEW WATER COURSES

Payments for river training and establishment of new watercourses shall only be made where such work constitute permanent works. Works done for road deviation or other temporary works shall not qualify for payment.

710 STONE PITCHING

Stone pitching to drains, inlets and outlets of culverts to embankments and around structure shall consist of sound unweathered rock approved by the Engineer.
The stone as dressed shall be roughly cubical in shape with minimum dimensions of 150 x 150mm for normal thickness of stone pitching.

The surface to receive the pitching shall be compacted and trimmed to slope and the stone laid, interlocked and rammed into the material to give an even finished surface.

In areas where stone pitching has been damaged, the Contractor shall identify such areas and notify the Engineer for his agreement of the extent of the Works required and his approval and instructions to proceed with the Works. Stone Pitching Repair and Reconstruction shall be carried out in accordance with Clause 710 of the Standard Specifications.

The Works shall involve removal of the damaged stone pitching and reconstruction of the said areas in accordance with Clause 710 of the Standard Specifications by use of the sound salvaged material together with any necessary additional material where all such materials shall comply with Section 7 of the Standard Specifications.

Contrary to clause 713 of the standard specifications, the rates inserted for stone pitching shall allow for grouting.

711 GABIONS

Where instructed by the Engineer the Contractor will install gabions as protection works to washout areas or bridge Piers and or Abutments. Gabions shall be constructed in accordance with Clause 711 of the Standard Specification.

I n cases where existing gabions have been damaged, the Contractor shall identify them and notify the Engineer for his agreement of the extent of the Work required and his approval and instructions to proceed with the Works.

The Works shall involve removal of the damaged gabions / rocks, excavation to the correct levels and grades as directed by the Engineer, and in accordance with Clause 711 of the Standard Specifications and reconstruction with new gabions and other necessary materials as necessary. The damaged gabions shall be recovered and transported to the nearest KURA'S Yard or M.O. R &P.W Department depot.

712 RIP-RAP PROTECTION WORK

Quarry waste or similar approved material shall be used to backfill scoured and eroded side, outfall and cut-off drain. The material shall be compacted to form a flat or curved surface preparatory to stone [pitching of drainage channels, existing and new scour checks as directed by the Engineer.

The surface to receive the pitching shall be compacted and trimmed to slope and the stone hand laid, interlocked and rammed into the material to give an even finished surface. The interstices of the Pitching shall be rammed with insitu material. The insitu material immediately behind the pitching shall be compacted to minimum density of 100% MDD compaction (AASHTO T.99)

714 BACKFILL BELOW STRUCTRURES

Where instructed this shall be carried out in compliance with the requirements of Clause 507 and 804 of the Standard Specification.

SECTION 8 - CULVERTS AND DRAINAGE WORKS

801 SCOPE OF SECTION

The operations specified in this section apply to the installation of drainage works and reinstatement and improvement of the same.

In addition, this Section covers: -

- Extending of existing 450mm, 600mm and 900mm diameter pipes to be compatible with the increased road width or access.

- Desilting and cleaning of existing pipes and outfall drains to make them free flowing.

804 EXCAVATION FOR CULVERTS AND DRAINAGE WORKS

In the Standard Specifications, make the following amendments: -

(a) In paragraph 6, line 3, and in paragraph 7, line 5 and in paragraph 11, line 6, delete "95%" and insert "100%".

(b) Removal of Existing Pipe Culverts

Where instructed by the Engineer, the Contractor shall excavate and remove all existing blocked or collapsed culvert pipes of 450mm, 600mm and 900mm diameter including concrete surround, bedding, inlet and outlet structure.
The void left after removal of culvert pipes shall be widened as necessary to accommodate new concrete bedding, pipe and haunching.
The payment of this work shall be per linear metre of pipes removed, and the volume in m^3 of inlet/outlet structure removed. The void left by removal of these pipes shall be carefully preserved in order to accommodate replacement of 450mm, 600mm or 900mm diameter pipe culverts as shall be directed by the Engineer.

(c) Removal of Other Existing Drainage Structures
When instructed by the Engineer, the Contractor shall demolish or remove any other structure and payment for this shall be made on day work basis.

(d) Excavation for Culverts and Drainage Works
The Contractor shall carry out all excavations for new culverts and drainage works to the lines, levels, inclinations, and dimensions shown on the drawings or as instructed by the Engineer.

805 EXCAVATION IN HARD MATERIAL

In the Standard Specifications, Sub-clauses 805(a) and 805 (b) delete "95%" and insert "100%".

In sub-clause 809(a), paragraph 1, line 1, substitute "95%" with "100%".

In sub-clause 809(c), paragraph 2, line 4, between the words "compacted" and "and shaped" insert the words "to 100% MDD (AASHTO T.99)".

Hard material is material that can be excavated only after blasting with explosives or barring and wedging or the use of a mechanical breaker fitted with a rock point in good condition and operated correctly. Boulders of more than $0.2m^3$ occurring in soft material shall be classified as hard material.

809 BEDDING AND LAYING OF PIPE CULVERTS

Concrete pipes shall be laid on a 150mm thick concrete bed of class 15/20 and the pipes shall be bedded on a 1:3 cement: sand mortar at least 50mm thick, 150mm wide and extending the full length of the barrel.

The rates inserted shall allow for compaction of the bottom of excavation to 100% MDD (AASHTO T.99).

810 JOINTING CONCRETE PIPES

The concrete pipes for the culverts shall have ogee joints and will be jointed by 1:2 cement: sand mortar and provided with fillets on the outside as described in clause 810 of the Standard Specification.

812 BACKFILLING OVER PIPE CULVERTS

In the Standard Specifications, clause 812

a) Wherever the expression "dry density of 95% MDD (AASHTO T. 99)" occurs delete and replace with "dry density of 100% MDD (AASHTO T.99)".

The rates entered for laying of pipe culverts shall allow for backfilling to pipe culverts and compacting to 100% MDD (AASHTO T.99) and these works shall not be measured and paid for separately.

814 SUBSOIL DRAINS

In the event of excavation for repairs exposing local seepage, springs or unacceptably high water table, the Engineer may instruct the provision of counter fort or French drains.

These drains shall consist of a trench excavated to the alignment, width, depth and gradient instructed by the Engineer, and backfilled with approved compacted clean hard crushed rock material as specified in clause 815 of the standard specification. Where these drains lie within the carriageway the carriageway shall be reinstated with compacted stabilized gravel and surfaced with hot asphalt or a surface dressing as instructed by the Engineer.

815 INVERT BLOCK DRAINS AND HALF ROUND CHANNELS

Invert Block Drains and Half Round Channels shall be constructed as shown in the drawings provided in accordance with the Standard Specifications where directed by the Engineer.

817 REPAIRS TO DRAINS

817.1 Cleaning and Repair of Existing Drains

In areas of existing side drains, mitre or outfall drains where such are blocked, the Engineer shall instruct the Contractor to clean and clear the drains to free flowing condition.

The work shall consist of:

(a) Stripping and removal of any extraneous material to spoil including vegetation and roots in the drains to the satisfaction of the engineer.

(b) Spreading of any spoil to the satisfaction of the Engineer.

Shaping the drains to free flowing condition as directed by the Engineer.
Removing any broken side slabs for inverted block drains and replacing with a new removing any broken inverted block drains and replacing with a new one well jointed.

Measurement and Payment for cleaning drains shall be by linear metre of drain cleaned measured as the product of plan area and vertical depth of extraneous material instructed to be removed. No extra payment will be made for removal of vegetation and roots.

817.2 Channels

The Engineer may instruct that the Contractor provides open channels in place of existing subdrains where the latter may be damaged or in any other place. The rates entered by the Contractor in the bills of quantities must include for removal and disposal of any subdrain material, excavation to line and level, backfilling and compaction as directed by the engineer. The channels shall be constructed of precast class 20/20 concrete of minimum 80mm thickness and lengths or widths not exceeding 1000mm. Joints shall be at least 15mm wide filled with 1:2 cement sand mortar.

817.3 Rubble fills for protection work

Quarry waste or similar approved material shall be used to back fill scoured and eroded side, outfall and cut-off drains. The material shall be compacted to form a flat or curved surface preparatory to stone pitching of drainage channels, existing and new scour checks as directed by the Engineer.

817.4 Stone Pitching

Stone pitching shall be constructed in accordance with clause 710 of the standard Specification.

817.5 Gabions

Gabions shall be constructed in accordance with clause 711 of the standard Specification.

817.6 Spoil Material

The Contractor shall be responsible for removal from site of all materials excavated in the course of undertaking works in this section of the specifications, unless suitable for re-use, and deposit of the material in a spoil dump to be approved by the Engineer.

818 SCOUR CHECKS

Scour checks are to be constructed in mass concrete in accordance with clause 818 of the standard Specifications and the drawings as shall be provided.

819 CLEANING AND MAINTENANCE

819.1 Desilting of Pipe Culverts

Where instructed, Contractor shall desilt the existing pipe culverts by removing all the material from the pipe to make them clean and free flowing.

Measurement and payment shall be by the linear metres of pipes de-silted, regardless of diameter size.

SECTION 9 - PASSAGE OF TRAFFIC

901 SCOPE OF THE SECTION

The Contractor shall so arrange his work to ensure the safe passage of the Traffic at all times and if necessary construct and maintain an adequate diversion for traffic complete with all the necessary road traffic signs.

The contractor shall provide to the satisfaction of the Engineer adequate warning signs, temporary restriction signs, advance warning signs, barriers, temporary bumps and any other device and personnel equipped with two way radios to ensure the safe passage of traffic through the works.

When carrying out the Works the Contractor shall have full regard for the safety of all road users.

The Contractor shall also provide sign posts and maintain to the satisfaction of the Engineer all deviations necessary to complete the works. The contractor should allow for the costs of complying with the requirements of this clause in his rates.

The contractor will be deemed to have inspected the site and satisfied himself as to the adequacy of his bid for these works and no additional payments will be made to the contractor for any expenditure on traffic control or the provision of deviations. The employer shall not be liable for inadequate prior investigations of this nature by the contractor.

903 MAINTENANCE OF EXISTING ROADS

The Contractor shall when instructed, maintain the existing project road ahead of works using compacted asphalt concrete type I in accordance with the provisions in clause 1601B – 1607B of the Special Specifications or gravel material depending on the nature of the wearing course surface.

904 CONSTRUCTION OF DEVIATIONS

(a) <u>General</u>

In addition to requirement of this clause, the Contractor shall when instructed construct and complete deviations to the satisfaction of the Engineer before commencing any permanent work on the existing road. Also during these works the contractor is supposed to provide a detour of adequate pipe culverts for pedestrian and traffic crossing where there is bridge works.

Subject to the approval by the Employer, the Contractor may maintain and use existing roads for deviation. Payment for this, made in accordance with clause 912 (a) (i), shall be by the Kilometre used depending on the type of road used, whether bituminous or earth/gravel. The rates shall include for the provision of materials and the works involved.

b) <u>Geometry</u>

The carriageway width of the deviations shall not be less than 6m wide and suitable for 2-way lorry traffic unless otherwise specified.

c) <u>Construction</u>

Unless otherwise instructed gravel wearing course for the deviation shall be 150mm compacted thickness complying with section 10 of the Standard Specification. The Contractor shall allow in his rate for removal of any unsuitable material before placing of gravel wearing course, as this will not be paid for separately.

In addition to provision of this clause, Contractor is required to sprinkle water at least 4 times a day at the rate of1 to 1.4 litres/M^2 in regular interval to minimize the effects of dust. Latest sprinkling time shall be one hour before the sunset.

Where existing neighboring roads are used as deviation, Contractor shall carry out repairs and maintenance in parent materials used for the existing base and surfacing of the road being used.

906 PASSAGE OF TRAFFIC THROUGH THE WORKS

The Contractor shall arrange for passage of traffic through the works during construction whenever it is not practicable to make deviations.

Any damage caused by passing traffic through the works shall be made good at the contractor's own cost.

907 SIGNS, BARRIERS AND LIGHTS

Contractor shall provide signs, barriers and lights as shown in the drawing in Book of Drawings at the locations where the traffic is being carried off the existing road to the deviation and back again to existing road. The Contractor shall provide ramps and carry out any other measures as instructed by the Engineer to safely carry traffic from the road to deviation.

Contrary to what has been specified in this clause the road signs provided shall be fully reflectorized and in conformity with clause 9.1 of the "Manual for Traffic Signs in Kenya Part II".

909 ASSISTANCE TO PUBLIC

In addition to provision of clause 909, Contractor shall maintain close liaison with the relevant authorities to clear any broken down or accident vehicles from the deviations and the main road, in order to maintain smooth and safe flow of the traffic. **Further, the Contractor shall provide a traffic management plan to be approved by the Engineer before the commencement of any construction works and execute the same, to the satisfaction of the Engineer, during the entire period of project implementation. A draft traffic management plan shall be submitted with Bid.**

912 MEASUREMENT AND PAYMENT

Construct Deviation

Road Deviation

The Contractor shall be paid only 50% of the rate for this when he completes deviation road to the satisfaction of the Engineer. The balance shall be paid in equal monthly instalments over the contract period, as he satisfactorily maintains the deviation (as per clause 904 and 905 above) when it is in operation.

Where existing neighboring road has been used as deviation, payment shall be by the kilometer rate and shall include the cost of repairs and maintenance of the road carried out in parent base and subbase materials.

Deviation using Pipe Culverts

The Contractor shall be paid only 50% of the rate for this when he completes deviation to the satisfaction of the Engineer. The balance shall be paid in equal monthly instalments over the contract period, as he satisfactorily maintains the deviation when it is in operation. The Contractor shall be paid full amount when the bridge under construction will be in use.

Maintain existing road

Asphalt Concrete or gravel for maintaining the existing road shall be measured by the cubic meter placed and compacted upon the road

Passage of traffic through the works

Payment shall be made on Lump Sum basis.

Assistance to Public

The Contractor will be deemed to have included cost of this item in other items and no separate payment shall be made.

SECTION 10 – GRADING AND GRAVELLING

1001 GENERAL

Grading covers the works involved in the reinstatement of the road carriageway to the camber by removing the high points and filling up gullies, corrugations and wheel ruts to restore smooth running surface. Gravelling consists of excavation, loading, hauling, spreading, watering and compaction of gravel or softstone wearing course material on the formation of the road carriageway.

Ditch and Shoulder grading

The activity consists of cutting of a V – ditch and reinstating or reforming of the shoulders of road using either Towed or Motor grader.

Carriageway grading

(i) Light grading

This consists of trimming of the carriageway to control roughness and corrugations using either a towed grader or a motorized grader.

(ii) Heavy grading

This consists of scarifying the existing carriageway surface, cutting high spots and moving materials to fill potholes, corrugations and wheel ruts and reshaping of the surface to the specified camber, using either a towed grader or a motorized grader. All loose rocks, roots, grasses shall be removed and disposed well clear off the drains.

Heavy grading will be considered if 70% of the road has potholes, corrugations and wheel ruts of over 200mm deep.

The material shall be bladed toward the center of the road starting from both edges until the specified camber is achieved.

1002 MATERIALS

Gravel shall include lateritic gravel, quarzitic gravel, calcareous gravel, decomposed rock, soft stone/quarry waste material, clayey sand and crushed rock.

1003 MATERIAL REQUIREMENTS

Gravel material shall conform to the requirements given below:

GRADING REQUIREMENTS AFTER COMPACTION	
Sieve (mm)	% by weight passing
40	100
28	95 – 100
20	85 – 100
14	65 – 100
10	55 – 100
5	35 – 92
2	23 – 77
1	18 – 62
0.425	14 – 50
0.075	10 - 40

PLASTICITY INDEX REQUIREMENTS PI		
Zone	Min	Max
WET	5	15
DRY	10	25

BEARING STRENGTH REQUIREMENTS		
Traffic Commercial VPD	CBR	DCP Equivalent mm/Blow
Greater than 15	20	11
Less than 15	15	14
CBR at 95% at MDD, Modified AASHTO and 4 days soak		
Lower quality material (CBR 15) may be accepted if no better material can be found		

NB: Wet Zone – mean annual rainfall greater than 500mm
Dry Zone – mean annual rainfall less than 500mm

1101 GENERAL

Shoulders shall be constructed in accordance with guidelines given in 1102 and as directed by the Engineer.

For sections where shoulders are extremely low and requires fill material before the shoulder is reconstructed, the construction of fill embankment shall be in accordance with Section 5 of this specification.

1102 MATERIAL FOR CONSTRUCTION OF SHOULDERS

The shoulders shall be 1.0m wide both sides and shall be formed of 150mm thick well compacted soft stone material and topsoiled with red coffee soil and planted with grass.

Low shoulder shall be reconstructed by cutting benches, filling and compacting approved fill material to form the formation to the shoulders.

Shoulder reconstruction shall be same in all sections including the slip roads.

1105 SURFACE TREATMENT OF SHOULDERS

The shoulders shall be planted with creeping type kikuyu grass.

1106 MEASUREMENT AND PAYMENT

Payment for shoulder construction shall be in accordance with the relevant clauses in sections 11, 12, 14, 15 and 23 of the relevant Specifications. Payment for fill material on shoulder shall be in accordance with Section 5 of this specification.

SECTION 12 ~ NATURAL MATERIAL SUBBASE AND BASE

1201 GENERAL

Where instructed by the Engineer, the Contractor shall undertake repairs, widening and reprocessing to the existing carriageway and shoulders in accordance with sections 12 and 14 of the Special Specifications.

a) Areas to be scarified and reprocessed

The contractor will scarify, add new material and reprocess sections as determined by the Engineer.

b) Pavement repairs

The Contractor will carry out repairs to base and subbase as directed by the Engineer and according to Specifications given in Sections 12 and 14 of the Standard Specifications.

c) Pavement widening

The Contractor shall, as directed by the Engineer, bench and compact the subgrade to 100% MDD (AASHTO T99), provide lay and compact material for subbase and base as directed by the Engineer and in accordance with Sections 5 and 12 of the Standard Specifications.

1203 MATERIAL REQUIREMENTS

Natural materials for base and subbase shall conform to the specifications given in Section 12 of the Standard Specifications for Road and Bridge Construction for cement and lime improved base and subbase.

1209 MEASUREMENT AND PAYMENT

Natural material for subbase and base shall be measured by the cubic metre placed and compacted upon the road calculated as the product of the compacted sectional area laid and the length.

1210 HAND PACKED STONE

Hand packed stone base is a layer of hand laid stone of defined size and durable in nature, laid in a manner such that when proof rolled and compacted it forms a stable and dense matrix as a road base.

a) Material for Hand Packed Stone Base

This shall consist of durable stone with nominal base dimensions of 75 mm square and minimum height of 150 mm or when compacted to give a layer of 150 mm. The stone shall be class C with the following requirements:

LAA	45 max
ACV	32 max
SSS	12 max
FI	30 max
CR	60 min.

It shall be free from foreign matter. The fines passing 0.425 mm sieve shall be NONPLASTIC

b) Laying

The stone shall be laid by hand closely together. The stone shall be carefully bedded and

tightly wedged with suitable spalls. The base of the stone shall alternate with the apex in all directions or as directed by the Engineer. The layer shall be proof rolled with a loaded scrapper or truck with a minimum axle load of 8 tonnes in the presence of the Engineer who shall approve of its stability before compaction.

c) Compaction

This shall be by a steel wheeled roller of at least five tonnes per metre width of roll. It shall consist of four static runs or until there is no movement under the roller. There shall follow vibratory compaction until an average dry density of 85% minimum of specific gravity of stone has been achieved. No result shall be below 82% of specific gravity. The surface of the compacted layer shall then be levelled by quarry dust (0/6 mm). The dust shall have the following specifications:

The stone shall be class C

Grading

Sieve Size	% Passing
10	100
6.3	90-100
4	75-95
2	50-70
1	33-50
0.425	20-33
0.300	16-28
0.150	10-20
0.075	6-12

The dust shall be free from foreign matter and fines passing 0.425 mm sieve shall be **NON-PLASTIC**. The maximum layer shall be 40 mm or as directed by the Engineer

d) Measurement and Payment

Payment shall be by the cubic metre laid (m^3). Measurement of volume shall be determined as the product of length and compacted thickness laid. The rate quoted for this item should include the cost for laying the levelling quarry dust layer, as no extra payment shall be made for this layer.

1211 REPROCESSING EXISTING PAVEMENT LAYERS

(a) General

The existing surfacing and the base shall be reprocessed with additional material and the composite mixture shall be compacted to form the subbase layer.

Before commencement of the work the Contractor shall propose plants and equipments he proposes to use for this activity.

The Contractor after approval of his proposal shall carry out test section in accordance with Section 3 of the Standard Specifications.

(b) The existing surfacing and base course shall be broken up to specified depth and reprocessed in place, where required. The underlying layers shall not be damaged, and material from one layer may normally not be mixed with that of another layer. Where unauthorized mixing occurs or where the material is contaminated in any way by the actions of the Contractor, and the contaminated material does not meet the specified requirements of for the particular layer, he shall remove such material and replace it with other approved material, all at his own expense.

(c) Any mixture composition of the new layer must not contain more than 30% of the bituminous material by volume. The mixture must not contain pieces of bound bituminous material larger than 37.5mm, and any such material shall be removed at the Contractor's cost.

(d) The requirements for imported material used in the respective pavement layers shall comply with the limitations, norms, sizes and strengths specified in the Standard Specifications clause 1203(b) and (d) and shall be worked as per Section 14 of the Standard Specification.

(e) Material reworked in-situ or that obtained from existing pavement is not expected to comply with the material requirements but the reworking should achieve the specified requirements.

(f) Where the thickness of any existing pavement layer requires to be supplemented within reprocessing and the thickness of the additional material after compaction will be less than 100mm, the existing layer shall be scarified to a depth that will give a layer thickness of at least 100mm after compacting the loosened existing and the additional material.

Controlling the Reworked Depth

The Contractor shall submit a proven method to method to control the depth of excavation, or layer to be reworked, to the Engineer for approval. The Engineer may order a trial section to be reprocessed before any major length of the road is rehabilitated.

Excavations

Excavations in the pavement shall be kept dry. In the event of water penetrating the underlying layers, construction of the consecutive layers shall be postponed until the underlying layers are dry enough to accommodate the construction plant without deforming or otherwise showing distress.

Step construction shall be carried out per layer at the joint when excavating, both longitudinally (if appropriate) and perpendicular to the direction of travel. The step width shall be 500mm perpendicular to the direction of travel, and 150mm long longitudinally, unless otherwise instructed by the Engineer.

Special care shall be taken when compacting the new material at the joint, ensuring that the specified density is achieved.

Measurement and Payment

(a) Item: In-situ reprocessing of existing pavement layers as subbase compacted to specified density (95% MDD AASHTO T180) and thickness.

Unit: M^3

The tendered rate shall include full compensation for breaking up the existing pavement layer to

specified depth, breaking down and preparing the material and the spreading and mixing in of any additional material

(b) Item: The addition of extra gravel to subbase.

Unit: M^3

The tendered rate shall include full compensation for procuring and addition of the material to the in-situ scarified layers and the transportation of the material over unlimited free-haul distance. The tendered rates will also include full compensation for prospecting for materials and any payments necessary to acquire the specified quality material.

(c) Excavation of existing bituminous pavement materials including unlimited free-haul.

Unit: M^3

The tendered rates shall include full compensation for excavating the existing bituminous material from the pavement layers and for loading, transporting the material for unlimited free-haul, off-loading and disposing of the materials as specified.

(d) Excavation of the existing pavement

Unit: M^3

The tendered rate shall include full compensation for excavating the existing material from the pavement layers and for loading, transporting the material for unlimited free-haul distance, off-loading and disposing of the material as specified.

Payment will only be made for breaking up and excavating existing pavement layers to the specified depth if the material is to be removed to spoil.

SECTION 15 - BITUMINOUS SURFACE TREATMENTS

1501B PREPARATION OF SURFACE

In addition to requirements of Clause 1503B of the Standard Specifications, the contractor shall prepare and Repair Cracks, Edges, Potholes and Other Failures as follows: -

a) **Cracks 3.0mm or less in width**

The entire crack area shall be cleaned by brushing with a wire brush and then blowing with a compressed air jet and the crack sealed with 80/100 cutback bitumen using a pouring pot or pressure lance and hand squeegee. The surface shall then de dusted with sand or crushed dust.

b) **Cracks greater than 3.0mm in width**

Before these cracks are filled a steel wire brush or router shall be used to clean them and then a compressed air jet shall be used to clean and remove any foreign or lose material in the crack until the entire crack area is clean.

When the crack and surrounding area have been thoroughly cleaned, dry sand shall be forced into the crack until it is sealed in the manner specified for cracks less than 3.0mm width.

c) **Potholes, edges and other repair areas**

Where instructed, the Contractor shall prepare areas for the repair of potholes, road edges and other repair areas by excavating off unsuitable or failed material and debris, trimming off excavated edges, cleaning and compacting the resulting surfaces and applying MC 30 or MC 70 cut-back bitumen prime coat at a rate of 0.8-1.2 litres/m^2, all as directed by the Engineer. Measurement and payment shall be made under the relevant item of Bill No 15. Where the surface repair on potholes and edges are to be carried out, Asphalt Concrete Type I (0/14gradation) shall be used. Bituminous material for repair of failures and other repair areas shall be paid for under the relevant item of Bill No 16

PART B - PRIME COAT

1502B MATERIALS FOR PRIME COAT AND TACK COAT.

For prime coat, the binder shall be a medium-curing cutback MC 70 unless otherwise directed by the Engineer.

The rate of spray of bituminous prime coat refers to the gross volume of the cutback bitumen, that is to say the volume of the bitumen plus dilatants.

Prime coat shall be applied to gravel areas that are to receive bituminous mixes as directed by the Engineer.

The tack coat shall consist of bitumen emulsion KI-60 unless otherwise directed by the Engineer.

The rates of spray of the binder shall be as instructed by the Engineer and shall generally be within the range 0.8-1.2 litres/square metre.

1511C MEASUREMENT AND PAYMENT

(a) Seal coat

Seal coats shall be measured by the litre, for each type of bituminous binder for each seal coat, calculated as the product of the area in square metres sprayed and the rate of application in litres/square metres, corrected to 15.6 ° C

SECTION 16 - BITUMINOUS MIX BASES, BINDER COURSES AND WEARING COURSES

This section covers different types of bituminous mixes for base and surface (wearing and binder courses) and is divided into the following parts: -

Part A General

Part B Asphalt Concrete for carriageway

PART A – GENERAL

1601A SCOPE OF PART A

Part A comprises all the general requirements for bituminous mixes, which apply to Part B as well.

1602A REQUIREMENTS FROM OTHER SECTIONS

The following sections of this Specification apply to Part B of this section and shall be read in conjunction therewith: -

Section 2	Materials and Testing of Materials
Section 3	Setting Out and Tolerances
Section 6	Quarries, Borrow Pits, Stockpile and Spoil Areas
Section 15	Bituminous Surface Treatments and Surface Dressing

1603A CONSTRUCTION PLANT

(a) General

The Contractor shall submit to the Engineer in accordance with Section 1 of its Specification, full details of the construction plant he proposes to use and the procedures he proposes to adopt for carrying out the permanent Works.

The Engineer shall have access at all times to construction plant for the purposes of inspection. The Contractor shall carry out regular calibration checks in the presence of the Engineer and shall correct forthwith any faults that are found.

All construction plant used in the mixing, laying and compacting of bituminous mixes shall be of adequate rated capacity, in good working condition, and shall be acceptable to the Engineer. Obsolete or worn-out plant will not be allowed on the work.

(b) Mixing Plant

Bituminous materials shall be mixed in a plant complying with ASTM Designation D995 and shall be located on the Site unless otherwise agreed by the Engineer. It shall be equipped with at least three bins for the storage of heated aggregates and a separate bin for filler. All bins shall be covered to prevent the ingress of moisture.

The plant may be either the batch-mix type or the continuous-mix type and shall be capable of regulating the composition of the mixture to within the tolerances specified in Clause 1614A of this Specification.

The bitumen tank shall be capable of maintaining its contents at the specified temperature within a tolerance of 5^{0}C and a fixed thermometer easily read from outside the tank. Any bitumen that has been heated above 180^{0}C or has suffered carbonization from prolonged heating shall be removed from the plant and disposed of.

(c) Laying Plant

Bituminous materials shall be laid by a self-propelled spreader finisher equipped with a hopper, delivery augers and a heated adjustable vibrating screed. It shall be capable of laying bituminous materials with no segregation, dragging, burning or other defects and within the specified level and surface regularity tolerance. Delivery augers shall terminate not more than 200mm from the edge plates.

(d) Compaction Plant

The Contractor shall provide sufficient rollers of adequate size and weight to achieve the specified compaction. Prior to commencing the laying of bituminous mixes in the permanent Works the Contractor shall carry out site trials in accordance with Section 2 of this Specification to demonstrate the adequacy of his plant and to determine the optimum method of use and sequence of operation of the rollers.

It is important to achieve as high a density as possible at the time of construction and it is expected that vibrating rollers will be required to produce the best results. However, it is essential that thorough pre-construction trials are carried out to ensure that: -

(a) The roller is set up to have the optimum amplitude and frequency of vibration for the particular material being laid

(b) That the roller does not cause breakdown of the aggregate particles.

(b) That the optimum compaction temperatures are established which allow compaction without causing ripple effects or other distortions of the surfacing.

1604A PREPARATION OF SURFACE

Immediately before placing the bituminous mix in the pavement, the existing surface shall be cleaned of all material and foreign matter with mechanical brooms or by other approved methods. The debris shall be deposited well clear of the surface to be covered.

Any defect of the surface shall be made good and no bituminous mix shall be laid until the Engineer has approved the surface.
A tack coat shall be applied in accordance with Section 15 of this Specification. If the Engineer considers a tack coat is required prior to laying the bituminous mix or between layers of the bituminous mix, due solely to the
Contractor's method of working, then such tack coat shall be at the Contractor's expense.

1605A DESIGN AND WORKING MIXES

At least two months prior to commencing work using a bituminous mix, the Contractor shall, having demonstrated that he can produce aggregates meeting the grading requirements of the Specification, submit samples of each constituent of the mix to the Engineer. The Engineer will then carry out laboratory tests in order to decide upon the proportion of each constituent of the initial design mix or mixes to be used for site trials to be carried out in accordance with Clause 1606A of this Specification.

Should the Engineer conclude from the site trials that the mix proportion or aggregate grading are to be changed, the Contractor shall submit further samples of the constituents and carry out further site trials all as directed by the Engineer.

The Engineer may instruct the alteration of the composition of the -75 micron fraction of the aggregates by the addition or substitution of mineral filler. The Engineer may also instruct the alteration of all or part of the -6.3mm fraction of the aggregates by the addition or substitution of natural sand.

The Contractor shall make the necessary adjustments to his plant to enable the revised mix to be produced.

Following laboratory and site trials the Engineer will determine the proportions of the working mix and the Contractor shall maintain this composition within the tolerances given in Clause 1614A.

Should any changes occur in the nature or source of the constituent materials, the Contractor shall advise the Engineer accordingly. The procedure set out above shall be followed in establishing the new mix design.

1606A SITE TRIALS

Full scale laying and compaction site trials shall be carried out by the Contractor on all asphalt pavement materials proposed for the Works using the construction plant and methods proposed by the Contractor for constructing the Works. The trials shall be carried out with the agreement, and in the presence of the Engineer, at a location approved by the Engineer.

The trials shall be carried out to: -

a) Test materials, designed in the laboratory, so that a workable mix that satisfies the specification requirements can be selected.

b) To enable the Contractor to demonstrate the suitability of his mixing and compaction equipment to provide and compact the material to the specified density and to confirm that the other specified requirements of the completed asphalt pavement layer can be achieved.

Each trial area shall be at least 100 metres long and to the full construction width and depth for the material. It may form part of the Works provided it complies with this Specification. Any areas that do not comply with this Specification shall be removed.

The Contractor shall allow in his programme for conducting site trials and for carrying out the appropriate tests on them. The trial on any pavement layer shall be undertaken at least 21 days ahead of the Contractor proposing to commence full-scale work on that layer.

The Contractor shall compact each section of trial over the range of compactive effort the Contractor is proposing and the following data shall be recorded for each level of compactive effort at each site trial: -

i. The composition and grading of the material including the bitumen content and type and grade of bitumen used.
ii. The moisture content of aggregate in the asphalt plant hot bins.
iii. The temperature of the bitumen and aggregate immediately prior to entering the mixer, the temperature of the mix on discharge from the mixer and the temperature of the mix on commencement of laying, on commencement of compaction and on completion of compaction. The temperature of the mixture is to be measured in accordance with BS 598, Part 3, Appendix A.
iv. The type, size, mass, width of roll, number of wheels, wheel load, tyre pressures, frequency of vibration and the number of passes of the compaction equipment, as appropriate for the type of roller.
v. The target voids and other target properties of the mix together with the results of the laboratory tests on the mix.
vi. The density and voids achieved.
vii. The compacted thickness of the layer.
viii. Any other relevant information as directed by the Engineer.

At least eight sets of tests shall be made by the Contractor and the Engineer on each 100 metres of trial for each level of compactive effort and provided all eight sets of results over
the range of compactive effort proposed by the Contractor meet the specified requirements for the material then the site trial shall be deemed successful. The above data recorded in the trial shall become the agreed basis on which the particular material shall be provided and processed to achieve the specified requirements.

1607A MIXING OF AGGREGATES AND BITUMEN

The bitumen shall be heated so that it can be distributed uniformly and care shall be taken not to overheat it. The temperature shall never exceed 170^0 C for 80/100-penetration grade bitumen.

The aggregates shall be dried and heated so that they are mixed at the following temperatures: -

125-165^{0}C when 80/100 bitumen is used

The dried aggregates shall be combined in the mixer in the amount of each fraction instructed by the Engineer and the bitumen shall then be introduced into the mixer in the amount specified. The materials shall then be mixed until a complete and uniform coating of the aggregate is obtained.

The mixing time shall be the shortest required to obtain a uniform mix and thorough coating. The wet mixing time shall be determined by the Contractor and agreed by the Engineer for each plant and for each type of aggregate used. It shall normally not exceed 60 seconds.

1608A TRANSPORTING THE MIXTURE

The bituminous mix shall be kept free of contamination and segregation during transportation. Each load shall be covered with canvas or similar covering to protect it from the weather and dust.

1609A LAYING THE MIXTURE

Immediately after the surface has been prepared and approved, the mixture shall be spread to line and level by the laying plant without segregation and dragging.

The mixture shall be placed in widths of one traffic lane at a time, unless otherwise agreed by the Engineer. The compacted thickness of any layer shall be at least 2.5 times the maximum size of the aggregate for wearing course and at least 2 times for binder course. The minimum thickness shall be 25mm.

Only on areas where irregularities or unavoidable obstacles make the use of mechanical laying impracticable, may the mixture be spread and compacted by hand.

1610A COMPACTION

Immediately after the bituminous mixture has been spread, it shall be thoroughly and uniformly compacted by rolling.

The layer shall be rolled when the mixture is in such a condition that rolling does not cause undue displacement or shoving.

The number, weight and type of rollers furnished shall be sufficient to obtain the required compaction while the mixture is in a workable condition. The sequence of rolling operations shall be as agreed with the Engineer and proved during site trials. Initial rolling
with steel tandem or three-wheeled roller shall follow the laying plant as closely as possible. The rollers shall be operated with the drive roll nearest the laying plant, at a slow and uniform speed (not exceeding 5 Km/Hr).

Rolling shall normally commence from the outer edge and proceed longitudinally parallel to the centreline, each trip overlapping one half of the roller width. On super elevated curves, rolling shall begin at the low side and progress to the high side. Where laying is carried out in lanes care must be taken to prevent water entrapment.

Intermediate rolling with a pneumatic-tyred or vibratory roller shall follow immediately. Final rolling with a steel-wheeled roller shall be used to eliminate marks from previous rolling.

To prevent adhesion of the mixture to the rollers, the wheels shall be kept lightly moistened with water.

In areas too small for the roller, a vibrating plate compactor or a hand tamper shall be used to achieve the specified compaction.

1611A FINISHING, JOINTS AND EDGES

Any mixture that becomes loose and broken, mixed with dirt or foreign matter or is in any way defective, shall be removed and replaced with fresh hot mixture, which shall be compacted to conform to the surrounding area.

Spreading of the mixture shall be as continuous as possible. Transverse joints shall be formed by cutting neatly in a straight line across the previous run to expose the full depth of the course. The vertical face so formed shall be painted lightly with hot 80/100 penetration grade bitumen just before the additional mixture is placed against it.
Longitudinal joints shall be rolled directly behind the paving operation. The first lane shall be placed true to line and level and have an approximately vertical face. The mixture placed in the abutting lane shall then be tightly crowded against the face of the previously placed lane. The paver shall be positioned to spread material overlapping the joint face by 20-30mm. Before rolling, the excess mixture shall be raked off and discarded.
When the abutting lane is not placed in the same day, or the joint is destroyed by traffic, the edge of the lane shall be cut back as necessary, trimmed to line and painted lightly

with hot 80/100 penetration grade bitumen just before the abutting lane is placed.

Any fresh mixture spread accidentally on the existing work at a joint shall be carefully removed by brooming it back on to uncompacted work, so as to avoid formation of irregularities at the joint. The finish at joints shall comply with the surface requirements and shall present the same uniformity of finish, texture and density as other sections of the work.

The edges of the course shall be rolled concurrently with or immediately after the longitudinal joint. In rolling the edges, roller wheels shall extend 50 to 100mm beyond the edge.

1612A SAMPLING AND TESTING OF BITUMINOUS MIXTURES

The sampling of bituminous mixtures shall be carried out in accordance with AASHTO T168 (ASTM Designation D979).

1613A QUALITY CONTROL TESTING

During mixing and laying of bituminous mixtures, control tests on the constituents and on the mixed material shall be carried out in accordance with Clause 1612A and Section 2 of this Specification.

If the results of any tests show that any of the constituent materials fail to comply with this Specification, the Contractor shall carry out whatever changes may be necessary to the materials or the source of supply to ensure compliance.

If the results of more than one test in ten on the mixed material show that the material fails to comply with this Specification, laying shall forthwith cease until the reason for the failure has been found and corrected. The Contractor shall remove any faulty material laid and replace it with material complying with this Specification all at his own expense.

1614A TOLERANCES

Surfacing courses and base shall be constructed within the geometric tolerances specified in Section 3 of this Specification.

The Contractor shall maintain the composition of the mixture as determined from the laboratory and site trials within the following tolerances, per single test: -

Bitumen Content	0.3% (by total weight of total mix)
Passing 10mm sieve and larger sieves	6% (by total weight of dry aggregate including mineral filler)
Passing sieves between 10mm and 1.0mm sieves	4% (by total weight of dry aggregate including mineral filler)
Passing sieves between 1.0mm and 0.075mm sieve	3% (by total weight of dry aggregate including mineral filler)
Passing 0.075mm sieve	2% (by total weight of dry aggregate including mineral filler)

The average amount of bitumen in any length of any layer, calculated as the product of the bitumen contents obtained from single tests and the weight of mixture represented by each test, shall not be less than the amount ordered.

The average amount of bitumen for each day's production calculated from the checked weights of mixes shall not be less than the amount ordered.
The average amount of bitumen in any length of any layer, calculated as the product of

the bitumen contents obtained from single tests and the weight of mixture represented by each test, shall not be less than the amount ordered.

The average amount of bitumen for each day's production calculated from the checked weights of mixes shall not be less than the amount ordered.

The final average overall width of the upper surface of a bituminous mix layer measured at six equidistant points over a length of 100m shall be at least equal to the width specified. At no point shall the distance between the centreline of the road and the edge of the upper surface of a bituminous mix layer be narrower than that specified by more than 13mm.

1615A MEASUREMENT AND PAYMENT

No separate measurement and payment shall be made for complying with the requirements of Clauses 1601A to 1614A inclusive and the Contractor shall be deemed to have allowed in his rates in Parts B and C of Section 16 of this Specification for the costs of complying with the requirements of Part A of Section 16 of this Specification

PART B - ASPHALT CONCRETE FOR SURFACING

1601B DEFINITION

Asphalt concrete means a thoroughly controlled, hot-mixed, hot-laid, plant mixture of well-graded dried aggregate and penetration grade bitumen, which, when compacted forms a dense material.
A distinction is drawn between asphalt concrete Type I (High Stability) and asphalt concrete Type II (Flexible). The asphalt concrete type to be used will be Type I.

1602B MATERIALS FOR ASPHALT CONCRETE TYPE 1

a) **Type of bituminous material**

The type of material to be used on severe sites will be of the continuously graded type similar to Asphaltic Concrete or Close Graded Macadam. It is essential that these materials are sealed with a single or double surface dressing or a Cape seal.

b) **Penetration Grade Bitumen**

Bitumen shall be 80/100 penetration grade since material is being laid at an altitude of more than 2,500m.

c) **Aggregate**

Coarse aggregate (retained on a 6.3mm sieve) shall consist of crushed stone free from clay, silt, organic matter and other deleterious substances. The aggregate class will be specified in the Special Specification and it shall comply with the requirements given in Table 16B-1(b). The grading for 0/20 mm for carriageway and 0/14mm for shoulders for binder course is as specified below:

Sieve size	0/20	0/14
28	100	-
20	90-100	100
14	75-95	90-100
10	60-82	70-90
6.3	47-68	52-75
4	37-57	40-60
2	25-43	30-45
1	18-32	20-35

0.425	11-22	12-24
0.300	9-17	10-20
0.150	5-12	6-14
0.075	3-7	4-8

TABLE 16B-1(b) - REQUIREMENTS FOR COARSE AGGREGATE

Coarse Aggregate (Retained on a 6.3mm Sieve)	
Test	**Maximum Value**
LAA ACV SSS FI	30 25 12 25

Fine aggregate (passing a 6.3mm sieve) shall be free from clay, silt, organic and other deleterious matter and shall be non-plastic. Unless otherwise specified in the Special Specification it shall consist of entirely crushed rock produced from stone having a Los Angeles Abrasion of not more than 40. The Sand Equivalent of the fine aggregate shall not be less than 40 and the SSS not more than 12.

b) Mineral Filler

Mineral Filler shall consist of ordinary Portland Cement 42.5 Grade

1603B GRADING REQUIREMENTS

The grading of the mixture of coarse and fine aggregate shall be within and approximately parallel to the grading envelopes given in Table 16B-1(b), for 0/14mm as specified for binder course, as described below.

GRADING REQUIREMENTS

To arrive at a suitable design it is necessary to investigate a number of gradings so that a workable mix, which also retains a minimum of 3 % voids at refusal density, is identified.

The largest particle size used should not be more than 25mm so that the requirements of the Marshall test method can be complied with.

Although the complete range of nominal maximum particle sizes is shown in the Tables, the total thickness of material laid should not be more than 75mm.

1604B REQUIREMENTS FOR ASPHALT CONCRETE TYPE 1

The mixture shall comply with the requirements given in Table 16B-2 as specified in

the Specification. In addition, minimum Marshall Stability for 2 x 75 blows shall be 9 kN and maximum 18 kN and at compaction to refusal shall have 3% VIM.
The proportion, by weight of total mixture, of bitumen shall be 5.0 – 6.5 % for 0/14 mm and 4.5 – 6.5 % for 0/20mm. This shall be termed the nominal binder content. The binder content of the working mix will be instructed by the Engineer following laboratory and site trials.

In order to determine the suitability of a coarse aggregate source a Marshall test programme shall be carried out. It will be advantageous to use a crushed rock which is known from past experience to give good results in this test procedure. A grading conforming to the Type I Binder Course detailed in Table 16B-1(a) 0/20 of this Specification should be tested (but with 100% passing the 25mm sieve) and it shall meet the requirements of Table 16B-2 of this Specification.

Having established the suitability of the aggregate source several grading shall be tested in the laboratory, including that used for the Marshall test, to establish relationships between bitumen content and VIM at refusal density. For each mix, samples will be made up to a range of bitumen contents and compacted to refusal using a gyratory compactor and a vibratory hammer in accordance with the procedure described in BS 598 (Part 104 : 1989), with one revision.

It should first be confirmed that compaction on one face of the sample gives the same refusal density as when the same compaction cycle is applied to both faces of the same sample. The procedure, which gives the highest density, must be used.

From the bitumen content-VIM relationship it will be possible to identify a bitumen content which corresponds to a VIM of 3 - 7%. If it is considered that the workability of the mix may be difficult then compaction trials should be undertaken. It is advisable to establish two or more gradings for compaction trials.

The mixes identified for compaction trials should be manufactured to the laboratory design bitumen content and to two other bitumen contents of +0.5% and +1% additional bitumen. Cores will be cut to determine the density of the compacted material, having completed this the core will then be reheated to 145+/-5□C in the appropriate mould and compacted to refusal in the vibrating hammer test. To be acceptable the cores cut from the compaction trial must have a density equivalent to at least 95% of refusal density.

The compaction trials will identify a workable mix which can be made to a bitumen content which gives 3% VIM at refusal density.

1605B MIXING AND LAYING HEAVY DUTY ASPHALT

The temperature of the bitumen and aggregates when mixed shall be 110+/-3□C above the softening point (R&B) of the bitumen.

Compaction should commence as soon as the mix can support the roller without undue displacement of material and completed before the temperature of the mix falls below 90^0C.
The minimum thickness of individual layers should be as follows:-

a)	For the 37.5mm mix	65mm
b)	For the 25.0mm mix	60mm
c)	For the 19.0mm mix	50mm
d)	For the 12.5mm mix	40mm

1606B COMPACTION

Rolling shall be continued until the voids measured in the completed layer are in accordance with the requirement for a minimum density of 98% of Marshall optimum, or, a minimum mean value of 95% of refusal density (no value less than 93%) as appropriate.

1607B MEASUREMENT AND PAYMENT

a) Item : Asphalt Concrete

Unit : m^3 of Asphalt Concrete Used

Asphalt concrete shall be measured by the cubic metre compacted on the road calculated as the product of the length instructed to be laid an the compacted cross-sectional area shown on the Drawings or instructed by the Engineer.

The rate for asphalt concrete shall include for the cost of providing, transporting, laying and compacting the mix with the nominal binder content and complying with the requirements of Parts A and B of Section 16 of this Specification.

SECTION 17 ~ CONCRETE WORKS

1703 MATERIALS FOR CONCRETE

This work shall consist of placing selected approved material of 250mm minimum diameter on the foundation put after excavation to receive levelling concrete in accordance with these specifications and in conformity with the lines, grades and cross sections shown on the Drawings as directed by the Engineer.

(a) Materials

Selected rock: The selected rock builders to be placed for this work shall be hard, sound, durable quarry stones as approved by the Engineer. Samples of the stone to be used shall be submitted to and approved by the Engineer before any stone is placed.
The maximum size of the stone boulders shall be 300mm.

(b) Construction Method

After completion of the structural excavation the surface of the loose soil shall be levelled and compacted. Then the stone of the above sizes shall be placed in one layer of 250mm over the compacted bed where the bottom slab will rest. Coarse sand shall be spread to fill up the voids in the stone boulders, and compaction with vibratory compactors should be performed to make this layer dense whereon a concrete of levelling course shall be placed.

(c) Measurement and payment

Measurement for the bedding materials shall be made in cubic metres for the completed and accepted work, measured from the dimension shown on the Drawings, unless otherwise directed by the Engineer.

Payment for the bedding Materials for Levelling Concrete Works shall be full compensation for furnishing and placing all materials, all labour equipment, tools and all other items necessary for proper completion of the work in accordance with the Drawings and specifications and as directed by the Engineer.

1703(A) LEVELLING CONCRETE (CLASS 15/20) FOR BOTTOM SLAB INCLUSIVE OF COST OF FORM WORKS

This work shall consist of placing and levelling lean concrete class 15/20 over the prepared bed of stone boulders in the foundation for bottom slab and wingwalls in accordance with these specifications and which conformity with the lines, grades, thickness and typical cross-sections shown on the drawings unless otherwise directed by the Engineer.

(a) **Materials for Levelling Concrete**

Requirement for the concrete class 15/20 is specified as follows:-
Design compressive strength (28) days : 15N/mm^2
Maximum size of coarse aggregate : 20mm
Maximum cement content : 300 kg/m^3.
Maximum water/cement ration of 50% with slump of 80mm.

(b) **Construction Method**

The bed of stone boulders upon which the levelling concrete will be placed shall be smooth, compacted and true to the grades and cross-section shall be set to the required lines and grades.

1.2 (c) **Measurement and payment**

Measurement for levelling concrete (class 15/20) shall be made in cubic metres completed and accepted levelling concrete work measured in place which is done in accordance with the Drawings and the Specifications.

Payment for this work shall be the full compensation for furnishing and placing all materials, labour, equipment and tools, and other incidentals to Specifications and as directed by the Engineer.

Pay item No. 17/02 Levelling Concrete Works (Class 15/20) for Box Culvert and wingwalls inclusive of Cost of Form works.

1703 (C) FORMWORK FOR CULVERT WALLS

This work shall consist of all temporary moulds for forming the concrete for culvert walls and slabs together with all temporary construction required for their support. Unless otherwise directed by the Engineer all formworks shall be removed on completion of the walls and slabs.

(a) **Materials**

Forms shall be made of wood or metal and shall conform to the shape, lines and dimensions shown on the Drawings.

All timber shall be free from holes, loose material, knots, cracks, splits and warps or other defects affecting the strength or appearance of the finished structure.

Release Agents – Release agents shall be either neat oils containing a surface activating agent, cream emulsions, or chemical agents to be approved by the Engineer.

(b) **Construction Method**

(i) **Formworks**

Formworks shall be designed to carry the maximum loads that may be imposed, and so be rigidly constructed as to prevent deformation due to load, drying and wetting, vibration and other causes. After forms have been set in correct location, they shall be inspected and approved by the Engineer before the concrete is placed.

If requested, the contractor shall submit to the Engineer working drawings of the forms and also, if requested, calculations to certify the rigidity of the forms.

1703(D) CONCRETE WORKS (CLASS 25/20) OF CULVERT WALLS AND SLABS

This work shall consist of furnishing, mixing, delivering and placing of the concrete for the construction of culvert walls and slabs, in accordance with these Specifications and

in conformity with the requirements shown on the Drawings.

Concrete class 25/20 shall be used for Culvert walls and slabs.

(a) Concrete Materials

(i) Cement: Cement shall be of Portland type and shall conform to the requirements of BS 12 or equivalent.

The contractor shall select only one type or brand of cement or others. Changing of type or brand of cement will not be permitted without a new mix design approved by the Engineer. All cement is subject to the Engineer's approval; however, approval of cement by the Engineer shall not relieve the Contractor of the responsibility to furnish concrete of the specified compressive strength.

Conveyance of cement by jute bags shall not be permitted. Storage in the Contractor's silo or storehouse shall not exceed more than two (2) months, and age of cement after manufacture at mill shall not exceed more than four (4) months. The Contractor shall submit to the Engineer for his approval the result of quality certificate prepared by the manufacturer.

Whenever it is found out that cement have been stored too long, moist, or caked, the cement shall be rejected and removed from the project.

(b) Aggregates

Fine and coarse aggregates must be clean, hard, strong and durable, and free from absorbed chemicals, clay coating, or materials in amounts that could affect hydration, bonding, strength and durability of concrete.

Grading of aggregates shall conform to the following requirements:

(i) Grading of Fine Aggregates

Sieve Size	Percentage by Weight Passing
10 mm	100
5 mm	89-100
2.5 mm	60-100
1.2 mm	30-100
0.6 mm	15- 54
0.3 mm	5- 40
0.15 mm	0 – 15

(ii) Grading of Coarse Aggregates

Size of Coarse Aggregate	Amounts finer than each standard sieve percentage by weight						
	40	30	25	20	15	10	5 2.5
	100 -	-	-	90-100	-	30-69	0-10

Other requirements for aggregates are as follows:

(iii) Fine Aggregates

Fitness Modulus, AASHTO M-6 : 2.3 – 3.1
Sodium Sulphate Soundness, AASHTO T104: Max. 10% loss
Content of Friable Particles AASHTO 112 : Max 1% by weight
Sand Equivalent, AASHTO T176 : Min. 75

(iv) Coarse Aggregate

Abrasion, AASGTO T96 : Max. 405 loss
Soft Fragment and shale, AASHTO M80 : Max. 5% by weight
Thin and elongated Pieces, AASHTO M80 : Max. 15%

(v) Water

All sources of water to be used with cement shall be approved by the Engineer. Water shall be free from injurious quantities of oil, alkali, vegetable matter and salt as determined by the Engineer.

(vi) Admixture

Only admixture, which have been tested and approved in the site laboratory through trial mixing for design proportion shall be used. Before selection of admixture, the Contractor shall submit to the Engineer the specific information or guarantees prepared by the admixture supplier.
The contractor shall not exclude the admixture from concrete proportions.

Concrete class 20/20

Concrete class 25/20 shall be used for culvert walls and slabs. The requirements of Concrete class 25/20 are provided as follows unless otherwise the Engineer will designate any alteration.

Design compressive strength (28 days) : 25N/mm^2
Maximum size of coarse aggregates : 20mm
Maximum water/cement ratio of 45% with slump of 80mm

(d) Proportioning Concrete

The Contractor shall consult with the Engineer as to mix proportions at least thirty (30) days prior to beginning the concrete work. The actual mix proportions of cement, aggregates, water and admixture shall be determined by the Contractor under supervision of the Engineer in the site laboratory.

The Contractor shall prepare the design proportions which has 120% of the strength requirement specified for the designated class of concrete.

No class of concrete shall be prepared or placed until its job-mix proportions have been approved by the Engineer.

(e) Concrete Work

(ii) Batching

Batching shall be done by weight with accuracy of:

Cement	: ½ percent
Aggregate	: ½ percent
Water and Admixture	: 1 percent.

Equipment should be capable of measuring quantities within these tolerances for the smartest batch regularly used, as well as for larger batches.

The accuracy of batching equipment should be checked every month in the presence of the Engineer and adjusted when necessary.

(iii) Mixing and delivery

Slump of mixed concrete shall be checked and approved at an accuracy of +25mm against designated slump in these specifications.

(iv) Concrete in hot weather

No concrete shall be placed when the ambient air temperature is expected to exceed thirty three degrees celsius (330c) during placement operations).

(v) Concreting at night

No concrete shall be mixed, placed or finished when natural light is insufficient, unless an adequate approved artificial lighting system is operated; such night work is subject to approval by the engineer.

(vi) Placing

In preparation of the placing of concrete, the interior space of forms shall be cleaned and approved by the engineer prior to placing concrete. All temporary members except tie bars to support forms shall be removed entirely from the forms and not buried in the concrete. The use of open and vertical chute shall not be permitted unless otherwise directed by the engineer.

The Contractor shall provide a sufficient number of vibrators to properly compact each batch immediately after it is placed in the forms.

(f) Measurement and Payment

Measurements for the Concrete Works Class 20/20 of culvert walls and slabs shall be made in cubic metres for the walls and slabs actually constructed, measured from their dimensions shown on the Drawings. Payment for the

Concrete Works (Class 20/20) of culvert walls and slabs shall be the full compensation for furnishing all materials of the concrete mixing, delivering, placing and curing the concrete, equipment and tools, labour and other incidental necessary for the completion of the work in accordance with the Drawings and these Specifications and as directed by the Engineer.

SECTION 20 ~ ROAD FURNITURE

2001 ROAD RESERVE BOUNDARY POSTS

Road reserve boundary posts shall be provided as directed by the Engineer and in compliance with Standard Specification clause 2001. They shall be placed at 50m. intervals along the boundary of the road reserve.

2003 EDGE MARKER POST

Edge marker post shall be provided as directed by the Engineer and in compliance with Standard Specification clause 2003

2004 PERMANENT ROAD SIGNS

Permanent Road Signs shall be provided as directed by the Engineer and in compliance with the requirements of the "Manual for Traffic Signs in Kenya" Part II and standard Specification clause 2004.

2004B EXISTING ROAD SIGNS

Where directed by the Engineer, the Contractor shall take down road signs including all posts, nuts, bolts and fittings, and remove and dispose of the concrete foundation and backfill the post holes. The signs shall be stored as directed by the Engineer.

Measurement and payment for taking down road signs shall be made by the number of signs of any type and size taken down, cleaned and stored as directed.

2005 ROAD MARKING

Paint for road marking shall be internally reflectorized hot applied thermoplastic material in accordance with Clause 219 of the Standard Specification.

The rates inserted in the Bills of Quantities for road marking shall include for prior application of approved tack coat.

2005A RAISED PAVEMENT MARKERS – ROAD STUDS

MATERIAL

Road studs are moulded of acrylonitrile butadiene styrene (ABS) conforming to ASTM Specification D1788 – 68, class 5-2-2 shell filled with inert, thermosetting compound and filler. The lens portion of the marker of the marker is of optical menthly methacrylic.

CONSTRUCTION

The road studs shall be constructed of high impact ABS containing a multi-biconvex glass lens reflector system. It shall be of monolithic construction, and not less than 98.5. m^2. The height of the marker shall not exceed 17mm and the underside shall contain a non-honeycomb base (flat).

REQUIREMENTS

The markers shall conform to the following requirements

Color

Shall be white, yellow or red as specified and the Retro – reflectance values should conform to the testing procedures of ASTME 809.

Impact Resistance

The market shall not crack or break when tested using a 1000-gram weight from a height of 1 metre. (ASTM D 2444) or BS 3900 Part E3.

Resistance to Water Penetration

Shall not have water penetration behind the lens after submerged in a water bath at 70 + 50 oF for 10 minutes. And it should still meet the reflectance Requirement. BS 998.

Heat Resistance

Shall comply with the initial brightness as per BS 873 Part IV of 1978

Night Visibility

The marker shall be bright as per BS 873 Part IV of 1978

Compression Resistance

There shall be no cracking sound at a pressure lower than 25 tones as per BS 873 Part IV of 1978.

Corrosion Resistance

After immersing a sample of Road stud in a solution containing 30g/1 of sodium chloride for 30 days, there shall not be any signs of corrosion -(BS998).

NOTE: These markers are intended for application directly to pavement surfaces and are compatible with raised pavement makers. These adhesives should be of high quality and tested for conformance to customer requirements.

ADHESIVES

They shall be of Resin Type–Epoxy of 2 different components part 1 and 2 i.e Adhesive and Reactor without any volatile solvents in both.

Pot life:	not less than 20 minutes at 20 °C
Rotational cure time:	between 20 and 30 minutes at 20 °C
Hard cure:	Between 40 and 60 minutes at 20 °C

APPLICATION INSTRUCTION

Preparation of Pavements

Make sure that the road surface is absolutely dry and free of oil and grease.

Mixing of Adhesive

Pour component B into the container of component A. Stir mixture by hand with a wooden or metal stick until uniform Grey Tint without a striae is obtained.

Installation

Pour the mixture on to the underside of the road stud. Then place the road stud firmly on the road surface. Adhesive should stand out for about 5mm to 10 mm over the edges of the stud.

Protection from the Traffic

Protect studs from traffic for 2 hours until the adhesive has properly hardened. Try by touching the adhesive.

NUMBER OF STUDS NEEDED FOR LABORATORY TESTS.

In order to approve a particular type of road stud, 4 sample road studs of each colour shall be submitted.

2006 GUARDRAILS

Contrary to the Standard Specification, guardrail posts shall be concrete 200 mm diameter set vertically at least 1.2m into the shoulder as directed by the Engineer. Spacer blocks shall also be made of concrete.

Beams for guardrails shall be "Armco Flex-beam" or similar obtained from a manufacturer approved by the Engineer.

2007 KERBS

a) Vertical Joints

Vertical joints between adjacent Kerbs shall not be greater than 5 mm in width and shall be filled with a mortar consisting of 1:3 cement: sand by volume.

b) Transition between flush and raised kerbs

The transition between flush and raised kerbs (e.g. at bus bays) shall be termed as ramped kerbs. The transition between flush and raised kerbs shall occur within a length of 2.0 m.

2008 KILOMETRE MARKER POSTS

Kilometer marker posts shall be provided as directed by the Engineer and in compliance with Standard Specification clause 2008.

2009 RUMBLE STRIPS

Where directed by the Engineer, the Contractor shall provide, place, trim, shape and compact to line and level asphalt concrete rumble strips on the finished shoulders. This shall be done to the satisfaction of the Engineer

2011 MEASUREMENT AND PAYMENT

Road reserve boundary posts

Road reserve boundary posts shall be measured by the number erected

Permanent road signs

Permanent road signs shall be measured by the number of each particular size erected.

Road marking

Road markings in yellow or white material shall be measured in square metres calculated as the plan area painted.

Road Studs

Road studs shall be measured by the number of each particular size erected.

Guardrail

Guardrail shall be measured by the meter as the length of the guardrail constructed.

Kerbs

Kerbs shall be measured by the meter as the length of kerbs constructed

SECTION 22-DAYWORKS

2202 MEASUREMENTS AND PAYMENT

(a) Plant

Where items of major plant listed in the schedule of Day works are specified by type (e.g. Concrete mixer etc.) the power rating if such items of plant are provided by the Contractor shall not be lower than the power ratings of such plant manufactured within the last two years prior to the date of BID. Any item of major plant employed upon Dayworks that has a power rating lower than specified above shall be paid for at rates lower than those in the schedule of Dayworks. The reduction in the rate payable shall be in proportion to the reduction in power rating below that specified above.

SECTION 23: CONCRETE PAVING BLOCKS

This works shall consist of providing, laying and fixing of concrete paving blocks and concrete paving slabs on a sand base on the driveway and walkways and other areas as directed by the Engineer.

a. Concrete Paving Blocks

The paving blocks shall be of type S of any shape fitting within a 295 mm square coordinating space and a work size thickness of at least 30 mm. The blocks shall confirm to the requirements of BS 6717:Pt. 1:1986 or Kenya standard equivalent.

The laying shall be broken at intervals of 50 m by concrete ribs of class 25 concrete.

The blocks shall be laid on a 40 mm minimum sand base whose specifications are as in section (b) of this specification.

b. Sand For Sand Base

Sand used as bedding for paving blocks and slabs shall be natural sand either pit or river sand. The grading shall conform and be parallel as much as possible to KS02 – 95 Parts 1 &2: 1984 for zones 1,2 or 3. The other requirements shall be as specified in section 1703 (c) of Standard Specifications.

c. Measurement and Payment

Payment for paving blocks and paving slabs shall be by square metre laid. The rate quoted would include the cost of haulage to site of the blocks, slabs and sand, as no extra payment shall be made for haulage

SECTION VII~ BILLS OF QUANTITIES

1. Objectives

The objectives of the Bill of Quantities are:

a) to provide sufficient information on the quantities of Works to be performed to enable tenders to be prepared efficiently and accurately; and

b) when a Contract has been entered into, to provide a priced Bill of Quantities for use in the periodic valuation of Works executed.

In order to attain these objectives, Works should be itemized in the Bill of Quantities in sufficient detail to distinguish between the different classes of Works, or between Works of the same nature carried out in different locations or in other circumstances which may give rise to different considerations of cost. Consistent with these requirements, the layout and contents of the Bill of Quantities should be as simple and brief as possible.

2. Day work Schedule

A Day work Schedule should be included only if the probability of unforeseen work, outside the items included in the Bill of Quantities, is high. To facilitate checking by the Procuring Entity of the realism of rates quoted by the Tenderers, the Day work Schedule should normally comprise the following:

a) A list of the various classes of labor, materials, and Constructional Plant for which basic day work rates or prices are to be inserted by the Tenderer, together with a statement of the conditions under which the Contractor shall be paid for work executed on a day work basis.

b) Nominal quantities for each item of day work, to be priced by each Tenderer at day work rates as Tender. The rate to be entered by the Tenderer against each basic day work item should include the Contractor's profit, overheads, supervision, and other charges.

3. Provisional Sums

A general provision for physical contingencies (quantity overruns) may be made by including a provisional sum in the Summary Bill of Quantities. Similarly, a contingency allowance for possible price increases should be provided as a provisional sum in the Summary priced Bill of Quantities. The inclusion of such provisional sums often facilitates budgetary approval by avoiding the need to request periodic supplementary approvals as the future need arises. Where such provisional sums or contingency allowances are used, the Special Conditions of Contract should state the manner in which they shall be used, and under whose authority (usually the Project Manager's).

The estimated cost of specialized work to be carried out, or of special goods to be supplied, by other contractors should be indicated in the relevant part of the Bill of Quantities as a particular provisional sum with an appropriate brief description. A separate procurement procedure is normally carried out by the Procuring Entity to select such specialized contractors. To provide an element of competition among the Tenderers in respect of any facilities, amenities, attendance, etc., to be provided by the successful Tenderer as prime Contractor for the use and convenience of the specialist contractors, each related provisional sum should be followed by an item in the Bill of Quantities inviting the Tenderer to quote a sum for such amenities, facilities, attendance, etc.

These Notes for Preparing a Bill of Quantities are intended only as information for the Procuring Entity or the person drafting the tendering document. They should not be included in the final tendering document.

4. The Bills of Quantities

The Bills of Quantities should be divided generally into the following sections:

a) Preambles
b) Preliminary items
c) Work Items
c) Day work Schedule;and

d) Provisional items
e) Summary.

Upgrading of Savanna Junction - Ambira Hospital Road and Access to Ugunja KMTC Road (Ugunja - Siaya County)

BILL OF QUANTITIES FY 2026-2027

Road Code: G61992, NR_41_678

Section Name: **Savanna Junction - Ambira Hospital Road and Access to Ugunja KMTC Road (1.4 Km)**

BILL NO. 1: GENERAL

ITEM CODE	Activity Description.	Unit	Billed Qty	Unit Bid Rate (Ksh)	Bill Item Cost Without VAT(Ksh)
01.80.010	Allow a prime cost of sum for material testing as directed by the Engineer	PC SUM	100,000.00	1	100,000.00
01.80.011	Extra over item 01-80-010 for contractors overheads and profits	%	100,000.00		
01.80.026	Allow a prime cost sum for the REs miscellaneous account	PC SUM	200,000.00	1	200,000.00
01.80.027	Extra over 01-80-026 for profits and overheads	%	200,000.00		
01.80.030a	Prime cost sum for payment of allowances for Engineer's site staff (Permanent staff)	PC SUM	1,000,000.00	1	1,000,000.00
01.80.030b	Extra Over on Item 01-80-030a for the Contractor's Overheads and Profit.	%	1,000,000.00		
01.80.030	Allow a prime cost for attendance to the RE's supervisory staff including overtime	PC SUM	2,000,000.00	1	2,000,000.00
01.80.031	Include percentage of PC sum in item 01-80-030 for contractors overhead and profit	%	2,000,000.00		
01.80.082	Provide,fuel,insure and maintain with driver 1No. 4WD double cabin(Odometer 0-60,000 km) Diesel propelled, with engine capacity of not less than 2500cc for the exclusive use by the Resident Engineer inclusive of the first 4000km per vehicle month to revert to the Contractor after the project.	Veh. Month	12.00		
01.80.083	Extra over on item 1.07 inclusive of fuels, maintenance, lubricants and servicing for kilometre over 4000km per vehicle month	Km	3,000.00		

	Total of Bill Carried Forward to Summary				
BILL NO. 4: SITE CLEARANCE					
ITEM CODE	**Activity Description.**	**Unit**	**Billed Qty**	**Unit Bid Rate (Ksh)**	**Bill Item Cost Without VAT(Ksh)**
04.60.001	Clear site on road reserve mechanically by removal of trees, hedges, bushes, vegetation and other deleterious materials.	Sq. Metres	8,400.00		
04.50.007	Cut, remove and dispose whole trees of above 450mm in girth including their stumps along the side of the road, slopes or alongside ditches.	No.	50.00		
04.50.010	Demolish reinforced or mass concrete structures and cart to spoil or stockpile for re-use.	Cub. Metres	60.00		
04.80.002	Remove topsoil to a maximum depth of 200mm.	Cub. Metres	2,520.00		
04.90.001	Relocation of services as specified	PC SUM	300,000.00	1.00	300,000.00
04.90.001a	Extra Over Item 04.90.001 for Contractors Overheads and Profits	%	300,000.00		
	Total of Bill Carried Forward to Summary				
BILL NO. 5: EARTHWORKS					
ITEM CODE	**Activity Description.**	**Unit**	**Billed Qty**	**Unit Bid Rate (Ksh)**	**Bill Item Cost Without VAT(Ksh)**
05.50.006	Fill in soft Material and compact	Cub. Metres	2,520.00		
05.50.008 a	Cut to spoil in soft (Mechanical)	Cub. Metres	6,300.00		
05.50.007	Fill in hard material and compact	Cub. Metres	1,080.00		

05.50.009a	Cut to spoil in hard (mechanical)	Cub. Metres	945.00		
05.50.012	Provide and Place rockfill to swamp (Mechanical)	Cub. Metres	122.50		
05.60.017	Provide,spread,water ,process and compact 300mm improved subgrade to 100% MDD (AASHTO T99) in two layers of 150mm thickness	Cub.Metres	3,780.00		
05.60.016	Compact the top 150 mm layer of existing ground below fills and cuts to 95% MDD (AASHTO T99)	Cub. Metres	1,890.00		
	Total of Bill Carried Forward to Summary				
BILL NO. 8: CULVERTS AND DRAINAGE WORKS					
ITEM CODE	**Activity Description.**	**Unit**	**Billed Qty**	**Unit Bid Rate (Ksh)**	**Bill Item Cost Without VAT(Ksh)**
08.50.005a	Excavate mechanically for inlet, outfall, mitre and catchwater drains in soft material	Cub.Metres	1,100.00		
08.50.022	Extra over item 08.70.037 for precast side slabs of 600 x 225 x 75 mm	Sq.Metres	425.25		
08.60.030	Excavation manually in soft material for culvert in any size.	Cub.Metres	192.00		
08.60.021	Provide, lay and joint pipe culvert of 300mm in diameter with surround	Metres	27.00		
08.60.022	Provide, lay and joint pipe culvert of 450mm in diameter without surround	Metres	56.00		
08.60.024	Provide, lay and joint pipe culvert of 600mm in diameter without surround	Metres	72.00		
08.60.026	Provide, lay and joint pipe culvert of 900mm in diameter without surround	Metres	54.00		
08.60.032	Provide, place and compact class 15/20 concrete	Cub.Metres	137.02		
08.60.033	Provide, place and compact class 20/20 concrete	Cub.Metres	6.75		
08.60.034	Provide, place and compact class 25/20 concrete	Cub.Metres	54.90		

08.60.035	A142 Fabric mesh	Sq.Metres	320.84		
08.70.036	Excavate in any material, cut to spoil the excavated material, provide and install IBD of dia. 300mm including single slab	Metres	1,260.00		
	Total of Bill Carried Forward to Summary				
	BILL NO. 9: PASSAGE OF TRAFFIC				
ITEM CODE	**Activity Description.**	**Unit**	**Billed Qty**	**Unit Bid Rate (Ksh)**	**Bill Item Cost Without VAT(Ksh)**
09.50.004	Place warning signs, barriers and cones around the working lane, sprinkle water to control dust and guide the passage of traffic through the works	Km	1.40		
	Total of Bill Carried Forward to Summary				
BILL NO. 12: NATURAL MATERIAL BASE AND SUB BASE					
ITEM CODE	**Activity Description.**	**Unit**	**Billed Qty**	**Unit Bid Rate (Ksh)**	**Bill Item Cost Without VAT(Ksh)**
12.50.003	Provide, spread, shape and compact approved natural gravel of CBR 30% and above for subbase layer.	Cub.Metres	2555		
12.50.004	Provide, spread, shape and compact approved natural gravel of CBR 30% and above for Base layer.	Cub.Metres	1470		
	Total of Bill Carried Forward to Summary				
BILL 14-CEMENT AND LIME TREATED SUBGRADE, SUBBASE AND BASE					
ITEM CODE	**Activity Description.**	**Unit**	**Billed Qty**	**Unit Bid Rate (Ksh)**	**Bill Item Cost Without VAT(Ksh)**
14.50.001	Provide transport to site of works cement improvement agent for natural material base as specified or as instructed by the Engineer	Tonne	85.995		

14.50.003	Mix and process natural material with cement as an improvement agent for base and compact at OMC to achieve the desired compressive strength as specified or as directed by the Engineer	Cub.Metres	1470		
14.50.004	Allow for curing and protection of cment treated base layer as specified or as instructed by the Engineer	Sq.Metres	9800		
	Total of Bill Carried Forward to Summary				
	BILL NO. 15: BITUMINOUS SURFACE TREATMENT AND SURFACE DRESSING				
ITEM CODE	**Activity Description.**	**Unit**	**Billed Qty**	**Unit Bid Rate (Ksh)**	**Bill Item Cost Without VAT(Ksh)**
15.50.002	Prepare surface of carriageway, bus bays and repair areas, provide and spray MC-30 cutback bitumen at a rate of 0.8-1.2 litre/m2 as prime coat	Litres	10,728.48		
15.50.003a	Prepare surface of repair areas provide and spray K1-60 bitumen emulsion as tack coat or seal to repair areas at a spray rate of 0.8-1.0 litre/m2	Litres	8,940.40		
	Total of Bill Carried Forward to Summary				
	BILL NO. 16: BITUMINOUS MIX				
ITEM CODE	**Activity Description.**	**Unit**	**Billed Qty**	**Unit Bid Rate (Ksh)**	**Bill Item Cost Without VAT(Ksh)**
16.60.001	Provide,lay and roll asphalt concrete type 1 (bitumen content 5-6% by weight) for carriageway and shoulders as directed by the Engineer.	Cub.Metres	447.02		
	Total of Bill Carried Forward to Summary				
	BILL NO. 20: ROAD FURNITURE				
ITEM CODE	**Activity Description.**	**Unit**	**Billed Qty**	**Unit Bid Rate (Ksh)**	**Bill Item Cost Without VAT(Ksh)**

20.50.006	Provide reflectorized yellow paint for road markings as specified	Sq.Metres	126.00		
20.50.007	Provide reflectorized white paint for road markings as specified	Sq.Metres	352.00		
20.50.011	Provide lay and joint concrete flush kerbs in support to carriageway, bus bays and junctions as specified	Metres	2820		
20.50.012	Excavate for,provide and place 250x125mm class 25/20 precast concrete raised kerbs in support of carriageway, busbays, walkway and junctuons as directed by the Engineer	Metres	1420		
20.50.015	Speed bump construction with asphalt concrete	Cub. Metres	9.6		
20.50.019	Install reflective studs along the centre line	No.	75.00		
20.70.002	Provide and erect priority, prohibitory, warning or mandatory signs	No.	12.00		
	Total of Bill Carried Forward to Summary				

BILL NO. 22: DAY WORKS

ITEM CODE	Activity Description.	Unit	Billed Qty	Unit Bid Rate (Ksh)	Bill Item Cost Without VAT(Ksh)
22.50.002	Unskilled Labour	Person days	100.00		
22.70.002	Provide, spread, mix and compact fine aggregates (Stone dust) with natural gravel as directed by the Engineer	Cub.Metres	204.40		
	Total of Bill Carried Forward to Summary				

BILL NO. 23: PAVED SURFACES

ITEM CODE	Activity Description.	Unit	Billed Qty	Unit Bid Rate (Ksh)	Bill Item Cost Without VAT(Ksh)
23.50.002	Provide, lay and install 200mm x 100mmx 60mm thick approved precast concrete paving blocks on approved 40mm thick sand bed at the footpaths, cycle tracks and other areas as specified on the drawings and as directed by the	Sq.Metres	2,100.00		

	Engineer. Colour and laying pattern of the blocks to be approved by the engineer.				
	Total of Bill Carried Forward to Summary				
BILL NO. 25: CROSS CUTTING ISSUES					
ITEM CODE	**Activity Description.**	**Unit**	**Billed Qty**	**Unit Bid Rate (Ksh)**	**Bill Item Cost Without VAT(Ksh)**
25.50.001a	Allow a prime sum for the participation of representative of Local Health Authorities and National AIDS council to train and communicate with workers. Allowance to include transport, meals, accommodation and any other reasonable allowances associated expenses and equipment expenses	PC SUM	30,000.00	1.00	30,000.00
25.50.001b	Include percentage of PC sum in item 25-50-001a for contractors overhead and profit	%	30,000.00		
25.50.004a	Allow a prime cost sum for carrying out an EIA, Environmental Monitoring and Environmental Audit for the project including Implementation of the Environmental Management plan, tree planting as instructed by the Engineer.	PC SUM	100,000.00	1.00	100,000.00
25.50.004b	Include percentage of PC sum in item 25-50-004a for contractors overhead and profit	%	100,000.00		
25.50.029a	Provide, erect, brand, maintain publicity sign and return to the employer upon expiry of the contract period as instructed by the Engineer.	No.	1.00		
	Total of Bill Carried Forward to Summary				

SUMMARY OF BILLS OF QUANTITIES		
Bill NO.	**DESCRIPTION**	**AMOUNT (SHS.)**
1	GENERAL	
4	SITE CLEARANCE	
5	EARTHWORKS	
8	CULVERTS AND DRAINAGE WORKS	
9	PASSAGE OF TRAFFIC	
12	NATURAL MATERIAL SUBBBASE AND BASE	
14	CEMENT AND LIME TREATED SUBGRADE, SUBBASE AND BASE	
15	BITUMINOUS SURF. TREAT.& S DRESSING	
16	BITUMINOUS MIXES	
20	ROAD FURNITURE	
22	DAYWORKS	
23	PAVED SURFACES	
25	CROSS CUTTING ISSUES	
A	**Sub-total 01**	
B	Add 16% of Sub-total 01 for VAT.	
C	Add 0.03% of Sub-Total 01 for Public Procurement Capacity Building Levy	
D	**Grand Total Carried Forward to Form of Bid (A+B+C)**	

PART III ~ CONDITIONS OF CONTRACT AND CONTRACT FORMS

SECTION VIII - GENERAL CONDITIONS OF CONTRACT

These General Conditions of Contract (GCC), read in conjunction with FIDIC Conditions of Contract 1999, the Special Conditions of Contract (SCC) and other documents listed therein, should be a complete document expressing fairly the rights and obligations of both parties.

These General Conditions of Contract have been developed on the basis of considerable international experience in the drafting and management of contracts, bearing in mind a trend in the construction industry towards simpler, more straightforward language.

The GCC can be used for both smaller admeasurement contracts and lump sum contracts.

General Conditions of Contract

A. General

1. Definitions

1.1 Bold face type is used to identify defined terms.

a) **The Accepted Contract** Amount means the amount accepted in the Letter of Acceptance for the execution and completion of the Works and the remedying of any defects.

b) **The Activity Schedule** is a schedule of the activities comprising the construction, installation, testing, and commissioning of the Works in a lump sum contract. It includes a lump sum price for each activity, which is used for valuations and for assessing the effects of Variations and Compensation Events.

c) **The Adjudicator** is the person appointed jointly by the Procuring Entity and the Contractor to resolve disputes in the first instance, as provided for in GCC 23.

d) **Bill of Quantities** means the priced and completed Bill of Quantities forming part of the Bid.

e) **Compensation Events** are those defined in GCC Clause 42 hereunder.

f) **The Completion Date** is the date of completion of the Works as certified by the Project Manager, in accordance with GCC Sub-Clause 53.1.

g) **The Contract** is the Contract between the Procuring Entity and the Contractor to execute, complete, and maintain the Works. It consists of the documents listed in GCC Sub-Clause 2.3 below.

h) **The Contractor** is the party whose Bid to carry out the Works has been accepted by the Procuring Entity.

i) **The Contractor's Bid** is the completed bidding document submitted by the Contractor to the Procuring Entity.

j) **The Contract Price** is the Accepted Contract Amount stated in the Letter of Acceptance and thereafter as adjusted in accordance with the Contract.

k) **Days** are calendar days; months are calendar months.

l) **Day works** are varied work inputs subject to payment on a time basis for the Contractor's employees and Equipment, in addition to payments for associated Materials and Plant.

m) **A Defect** is any part of the Works not completed in accordance with the Contract.

n) **The Defects** Liability Certificate is the certificate issued by Project Manager upon correction of defects by the Contractor.

o) **The Defects Liability Period** is the period **named in the SCC** pursuant to Sub-Clause 34.1 and calculated from the Completion Date.

p) **Drawings** means the drawings of the Works, as included in the Contract, and any additional and modified drawings issued by (or on behalf of) the Procuring Entity in accordance with the Contract, include calculations and other information provided or approved by the Project Manager for the execution of the Contract.

q) **The Procuring Entity** is the party who employs the Contractor to carry out the Works, **as specified in the SCC,** who is also the Procuring Entity.

r) **Equipment** is the Contractor's machinery and vehicles brought temporarily to the Site to construct the Works.

s) **"In writing" or "written"** means hand-written, type-written, printed or electronically made, and resulting in a permanent record;

t) The Initial Contract Price is the Contract Price listed in the Procuring Entity's Letter of Acceptance.

u) **The Intended Completion Date** is the date on which it is intended that the Contractor shall complete the Works. The Intended Completion Date is **specified in the SCC**. The Intended Completion Date may be revised only by the Project Manager by issuing an extension of time or an acceleration order.

v) **Materials** are all supplies, including consumables, used by the Contractor for incorporation in the Works.

w) **Plant i**s any integral part of the Works that shall have a mechanical, electrical, chemical, or biological function.

x) **The Project Manager** is the person **named in the SCC** (or any other competent person appointed by the Procuring Entity and notified to the Contractor, to act in replacement of the Project Manager) who is responsible for supervising the execution of the Works and administering the Contract.

y) **SCC** means Special Conditions of Contract.

z) **The Site** is the area of the works as **defined as such in the SCC**.

aa) **Site Investigation Reports** are those that were included in the bidding document and are factual and interpretative reports about the surface and subsurface conditions at the Site.

bb) **Specification** means the Specification of the Works included in the Contract and any modification or addition made or approved by the Project Manager.

cc) **The Start Date** is **given in the SCC**. It is the latest date when the Contractor shall commence execution of the Works. It does not necessarily coincide with any of the Site Possession Dates.

dd) **A Subcontractor** is a person or corporate body who has a Contract with the Contractor to carry out a part of the work in the Contract, which includes work on the Site.

ee) **Temporary Works** are works designed, constructed, installed, and removed by the Contractor that are needed for construction or installation of the Works.

ff) **A Variation** is an instruction given by the Project Manager which varies the Works.

gg) **The Works** are what the Contract requires the Contractor to construct, install, and turn over to the Procuring Entity, **as defined in the SCC**.

2. Interpretation

21 In interpreting these GCC, words indicating one gender include all genders. Words indicating the singular also include the plural and words indicating the plural also include the singular. Headings have no significance. Words have their normal meaning under the language of the Contract unless specifically defined. The Project Manager shall provide instructions clarifying queries about these GCC.

22 If sectional completion is specified in the SCC, references in the GCC to the Works, the Completion Date, and the Intended Completion Date apply to any Section of the Works (other than references to the Completion Date and Intended Completion Date for the whole of the Works).

23 The documents forming the Contract shall be interpreted in the following order of priority:

a) Agreement,
b) Letter of Acceptance,
c) Contractor's Bid,
d) Special Conditions of Contract,
e) General Conditions of Contract, including Appendices,
f) Specifications,
g) Drawings,
h) Bill of Quantities[6], and

i) any other document **listed in the SCC** as forming part of the Contract.

[6]*In lump sum contracts, delete "Bill of Quantities" and replace with "Activity Schedule."*

3. Language and Law

3.1 The language of the Contract is English Language and the law governing the Contract are the Laws of Kenya.

3.2 Throughout the execution of the Contract, the Contractor shall comply with the import of goods and services prohibitions in the Procuring Entity's Country when

a) as a matter of law or official regulations, Kenya prohibits commercial relations with that country; or

b) by an act of compliance with a decision of the United Nations Security Council taken under Chapter VII of the Charter of the United Nations, Kenya prohibits any import of goods from that country or any payments to any country, person, or entity in that country.

4. Project Manager's Decisions

4.1 Except where otherwise specifically stated, the Project Manager shall decide contractual matters between the Procuring Entity and the Contractor in the role representing the Procuring Entity.

5. Delegation

5.1 Otherwise **specified in the SCC,** the Project Manager may delegate any of his duties and responsibilities to other people, except to the Adjudicator, after notifying the Contractor, and may revoke any delegation after notifying the Contractor.

6. Communications

6.1 Communications between parties that are referred to in the Conditions shall be effective only when in writing. A notice shall be effective only when it is delivered.

7. Subcontracting

7.1 The Contractor may subcontract with the approval of the Project Manager, but may not assign the Contract without the approval of the Procuring Entity in writing. Subcontracting shall not alter the Contractor's obligations.

8. Other Contractors

8.1 The Contractor shall cooperate and share the Site with other contractors, public authorities, utilities, and the Procuring Entity between the dates given in the Schedule of Other Contractors, as **referred to in the SCC.** The Contractor shall also provide facilities and services for them as described in the Schedule. The Procuring Entity may modify the Schedule of Other Contractors, and shall notify the Contractor of any such modification.

9. Personnel and Equipment

9.1 The Contractor shall employ the key personnel and use the equipment identified in its Bid, to carry out the Works or other personnel and equipment approved by the Project Manager. The Project Manager shall approve any proposed replacement of key personnel and equipment only if their relevant qualifications or characteristics are substantially equal to or better than those proposed in the Bid.

9.2 If the Project Manager asks the Contractor to remove a person who is a member of the Contractor's staff or work force, stating the reasons, the Contractor shall ensure that the person leaves the Site within seven days and has no further connection with the work in the Contract.

9.3 If the Procuring Entity, Project Manager or Contractor determines, that any employee of the Contractor be determined to have engaged in Fraud and Corruption during the execution of the Works, then that employee shall be removed in accordance with Clause 9.2 above.

10. Procuring Entity's and Contractor's Risks

10.1 The Procuring Entity carries the risks which this Contract states are Procuring Entity's risks, and the Contractor carries the risks which this Contract states are Contractor's risks.

11. Procuring Entity's Risks

11.1 From the Start Date until the Defects Liability Certificate has been issued, the following are Procuring Entity's risks:

a) The risk of personal injury, death, or loss of or damage to property (excluding the Works, Plant, Materials, and Equipment), which are due to

i) use or occupation of the Site by the Works or for the purpose of the Works, which is the unavoidable result of the Works or

ii) negligence, breach of statutory duty, or interference with any legal right by the Procuring Entity or by any person employed by or contracted to him except the Contractor.

b) The risk of damage to the Works, Plant, Materials, and Equipment to the extent that it is due to a fault of the Procuring Entity or in the Procuring Entity's design, or due to war or radioactive contamination directly affecting the country where the Works are to be executed.

11.2 From the Completion Date until the Defects Liability Certificate has been issued, the risk of loss of or damage to the Works, Plant, and Materials is a Procuring Entity's risk except loss or damage due to

aa) a Defect which existed on the Completion Date,

bb) an event occurring before the Completion Date, which was not itself a Procuring Entity's risk, or

cc) the activities of the Contractor on the Site after the Completion Date.

12. Contractor's Risks

12.1 From the Starting Date until the Defects Liability Certificate has been issued, the risks of personal injury, death, and loss of or damage to property (including, without limitation, the Works, Plant, Materials, and Equipment) which are not Procuring Entity's risks are Contractor's risks.

13. Insurance

13.1 The Contractor shall provide, in the joint names of the Procuring Entity and the Contractor, insurance cover from the Start Date to the end of the Defects Liability Period, in the amounts and deductibles **stated in the SCC** for the following events which are due to the Contractor's risks:

a) loss of or damage to the Works, Plant, and Materials;

b) loss of or damage to Equipment;

c) loss of or damage to property (except the Works, Plant, Materials, and Equipment) in connection with the Contract; and

d) personal injury or death.

13.2 Policies and certificates for insurance shall be delivered by the Contractor to the Project Manager for the Project Manager's approval before the Start Date. All such insurance shall provide for compensation to be payable in the types and proportions of currencies required to rectify the loss or damage incurred.

13.3 If the Contractor does not provide any of the policies and certificates required, the Procuring Entity may effect the insurance which the Contractor should have provided and recover the premiums the Procuring Entity has paid from payments otherwise due to the Contractor or, if no payment is due, the payment of the premiums shall be a debt due.

13.4 Alterations to the terms of an insurance shall not be made without the approval of the Project Manager.

13.5 Both parties shall comply with any conditions of the insurance policies.

14. Site Data

14.1 The Contractor shall be deemed to have examined any Site Data **referred to in the SCC**,

supplemented by any information available to the Contractor.

15. Contractor to Construct the Works

15.1 The Contractor shall construct and install the Works in accordance with the Specifications and Drawings.

16. The Works to Be Completed by the Intended Completion Date

16.1 The Contractor may commence execution of the Works on the Start Date and shall carry out the Works in accordance with the Program submitted by the Contractor, as updated with the approval of the Project Manager, and complete them by the Intended Completion Date.

17. Approval by the Project Manager

17.1 The Contractor shall submit Specifications and Drawings showing the proposed Temporary Works to the Project Manager, for his approval.

17.2 The Contractor shall be responsible for design of Temporary Works.

17.3 The Project Manager's approval shall not alter the Contractor's responsibility for design of the Temporary Works.

17.4 The Contractor shall obtain approval of third parties to the design of the Temporary Works, where required.

17.5 All Drawings prepared by the Contractor for the execution of the temporary or permanent Works, are subject to prior approval by the Project Manager before this use.

18. Safety

18.1 The Contractor shall be responsible for the safety of all activities on the Site.

19. Discoveries

19.1 Anything of historical or other interest or of significant value unexpectedly discovered on the Site shall be the property of the Procuring Entity. The Contractor shall notify the Project Manager of such discoveries and carry out the Project Manager's instructions for dealing with them.

20. Possession of the Site

20.1 The Procuring Entity shall give possession of all parts of the Site to the Contractor. If possession of a part is not given by the date **stated in the SCC,** the Procuring Entity shall be deemed to have delayed the start of the relevant activities, and this shall be a Compensation Event.

21. Access to the Site

21.1 The Contractor shall allow the Project Manager and any person authorized by the Project Manager access to the Site and to any place where work in connection with the Contract is being carried out or is intended to be carried out.

22. Instructions, Inspections and Audits

22.1 The Contractor shall carry out all instructions of the Project Manager which comply with the applicable laws where the Site is located.

22.2 The Contractor shall keep, and shall make all reasonable efforts to cause its Subcontractors and sub-consultants to keep, accurate and systematic accounts and records in respect of the Works in such form and details as will clearly identify relevant time changes and costs.

22.3 The Contractor shall permit and shall cause its subcontractors and sub-consultants to permit, the Procuring Entity and/or persons appointed by the Public Procurement Regulatory Authority to inspect the Site and/or the accounts and records relating to the procurement process, selection and/or contract execution, and to have such accounts and records audited by auditors appointed by the Public Procurement Regulatory Authority. The Contractor's and its Subcontractors' and sub-

consultants' attention is drawn to Sub-Clause 25.1 (Fraud and Corruption) which provides, inter alia, that acts intended to materially impede the exercise of the Public Procurement Regulatory Authority's inspection and audit rights constitute a prohibited practice subject to contract termination (as well as to a determination of ineligibility pursuant to the Public Procurement Regulatory Authority's prevailing sanctions procedures).

23. Appointment of the Adjudicator

23.1 The Adjudicator shall be appointed jointly by the Procuring Entity and the Contractor, at the time of the Procuring Entity's issuance of the Letter of Acceptance. If, in the Letter of Acceptance, the Procuring Entity does not agree on the appointment of the Adjudicator, the Procuring Entity will request the Appointing Authority designated in the SCC, to appoint the Adjudicator within 14 days of receipt of such request.

23.2 Should the Adjudicator resign or die, or should the Procuring Entity and the Contractor agree that the Adjudicator is not functioning in accordance with the provisions of the Contract, a new Adjudicator shall be jointly appointed by the Procuring Entity and the Contractor. In case of disagreement between the Procuring Entity and the Contractor, within 30 days, the Adjudicator shall be designated by the Appointing Authority designated in the SCC at the request of either party, within 14 days of receipt of such request.

24. Settlement of Claims and Disputes

24.1 Contractor's Claims

24.1.1 If the Contractor considers itself to be entitled to any extension of the Time for Completion and/or any additional payment, under any Clause of these Conditions or otherwise in connection with the Contract, the Contractor shall give Notice to the Project Manager, describing the event or circumstance giving rise to the claim. The notice shall be given as soon as practicable, and not later than 30 days after the Contractor became aware, or should have become aware, of the event or circumstance.

24.1.2 If the Contractor fails to give notice of a claim within such period of 30 days, the Time for Completion shall not be extended, the Contractor shall not be entitled to additional payment, and the Procuring Entity shall be discharged from all liability in connection with the claim. Otherwise, the following provisions of this Sub- Clause shall apply.

24.1.3 The Contractor shall also submit any other notices which are required by the Contract, and supporting particulars for the claim, all as relevant to such event or circumstance.

24.1.4 The Contractor shall keep such contemporary records as may be necessary to substantiate any claim, either on the Site or at another location acceptable to the Project Manager. Without admitting the Procuring Entity's liability, the Project Manager may, after receiving any notice under this Sub-Clause, monitor the record- keeping and/or instruct the Contractor to keep further contemporary records. The Contractor shall permit the Project Manager to inspect all these records, and shall (if instructed) submit copies to the Project Manager.

24.1.5 Within 42 days after the Contractor became aware (or should have become aware) of the event or circumstance giving rise to the claim, or within such other period as may be proposed by the Contractor and approved by the Project Manager, the Contractor shall send to the Project Manager a fully detailed claim which includes full supporting particulars of the basis of the claim and of the extension of time and/or additional payment claimed. If the event or circumstance giving rise to the claim has a continuing effect:

a) this fully detailed claim shall be considered as interim;
b) the Contractor shall send further interim claims at monthly intervals, giving the accumulated delay and/or amount claimed, and such further particulars as the Project Manager may reasonably require; and
c) the Contractor shall send a final claim within 30 days after the end of the effects resulting from the event or circumstance, or within such other period as may be proposed by the Contractor and approved by the Project Manager.

24.1.6 Within 42 days after receiving a Notice of a claim or any further particulars supporting a

previous claim, or within such other period as may be proposed by the Project Manager and approved by the Contractor, the Project Manager shall respond with approval, or with disapproval and detailed comments. He may also request any necessary further particulars, but shall nevertheless give his response on the principles of the claim within the above defined time period.

24.1.7 Within the above defined period of 42 days, the Project Manager shall proceed in accordance with Sub-Clause

24.1.8 [Determinations] to agree or determine (i) the extension (if any) of the Time for Completion (before or after its expiry) in accordance with Sub-Clause 8.4 [Extension of Time for Completion], and/or (ii) the additional payment (if any) to which the Contractor is entitled under the Contract.

24.1.9 Each Payment Certificate shall include such additional payment for any claim as has been reasonably substantiated as due under the relevant provision of the Contract. Unless and until the particulars supplied are sufficient to substantiate the whole of the claim, the Contractor shall only be entitled to payment for such part of the claim as he has been able to substantiate.

24.1.10 If the Project Manager does not respond within the timeframe defined in this Clause, either Party may consider that the claim is rejected by the Project Manager and any of the Parties may refer to Arbitration in accordance with Sub-Clause 24.4 [Arbitration].

24.1.11 The requirements of this Sub-Clause are in addition to those of any other Sub-Clause which may apply to a claim. If the Contractor fails to comply with this or another Sub-Clause in relation to any claim, any extension of time and/or additional payment shall take account of the extent (if any) to which the failure has prevented or prejudiced proper investigation of the claim, unless the claim is excluded under the second paragraph of this Sub-Clause 24.3.

242 Amicable Settlement

24.2.1 Where a notice of a claim has been given, both Parties shall attempt to settle the dispute amicably before the commencement of arbitration. However, unless both Parties agree otherwise, the Party giving a notice of a claim in accordance with Sub-Clause 24.1 above should move to commence arbitration after the fifty-sixth day from the day on which a notice of a claim was given, even if no attempt at an amicable settlement has been made.

243 Matters that may be referred to arbitration

24.3.1 Notwithstanding anything stated herein the following matters may be referred to arbitration before the practical completion of the Works or abandonment of the Works or termination of the Contract by either party:

a) The appointment of a replacement Project Manager upon the said person ceasing to act.
b) Whether or not the issue of an instruction by the Project Manager is empowered by these Conditions.
c) Whether or not a certificate has been improperly withheld or is not in accordance with these Conditions.
e) Any dispute arising in respect of war risks or war damage.
f) All other matters shall only be referred to arbitration after the completion or alleged completion of the Works or termination or alleged termination of the Contract, unless the Procuring Entity and the Contractor agree otherwise in writing.

244 Arbitration

24.4.1 Any claim or dispute between the Parties arising out of or in connection with the Contract not settled amicably in accordance with Sub-Clause 24.3 shall be finally settled by arbitration.

24.4.2 No arbitration proceedings shall be commenced on any claim or dispute where notice of a claim or dispute has not been given by the applying party within ninety days of the occurrence or discovery of the matter or issue giving rise to the dispute.

24.4.3 Notwithstanding the issue of a notice as stated above, the arbitration of such a claim or dispute shall not commence unless an attempt has in the first instance been made by the parties to settle such claim or dispute amicably with or without the assistance of third parties. Proof of such

attempt shall be required.

24.4.4 The Arbitrator shall, without prejudice to the generality of his powers, have powers to direct such measurements, computations, tests or valuations as may in his opinion be desirable in order to determine the rights of the parties and assess and award any sums which ought to have been the subject of or included in any certificate.

24.4.5 The Arbitrator shall, without prejudice to the generality of his powers, have powers to open up, review and revise any certificate, opinion, decision, requirement or notice and to determine all matters in dispute which shall be submitted to him in the same manner as if no such certificate, opinion, decision requirement or notice had been given.

24.4.6 The arbitrators shall have full power to open up, review and revise any certificate, determination, instruction, opinion or valuation of the Project Manager, relevant to the dispute. Nothing shall disqualify representatives of the Parties and the Project Manager from being called as a witness and giving evidence before the arbitrators on any matter whatsoever relevant to the dispute.

24.4.7 Neither Party shall be limited in the proceedings before the arbitrators to the evidence, or to the reasons for dissatisfaction given in its Notice of Dissatisfaction.

24.4.8 Arbitration may be commenced prior to or after completion of the Works. The obligations of the Parties, and the Project Manager shall not be altered by reason of any arbitration being conducted during the progress of the Works.

24.4.9 The terms of the remuneration of each or all the members of Arbitration shall be mutually agreed upon by the Parties when agreeing the terms of appointment. Each Party shall be responsible for paying one-half of this remuneration.

245 Arbitration with National Contractors

24.5.1 If the Contract is with national contractors, arbitration proceedings will be conducted in accordance with the Arbitration Laws of Kenya. In case of any claim or dispute, such claim or dispute shall be notified in writing by either party to the other with a request to submit it to arbitration and to concur in the appointment of an Arbitrator within thirty days of the notice. The dispute shall be referred to the arbitration and final decision of a person to be agreed between the parties. Failing agreement to concur in the appointment of an Arbitrator, the Arbitrator shall be appointed, on the request of the applying party, by the Chairman or Vice Chairman of any of the following professional institutions;

i) Architectural Association of Kenya
ii) Institute of Quantity Surveyors of Kenya
iii) Association of Consulting Engineers of Kenya
iv) Chartered Institute of Arbitrators (Kenya Branch)
v) Institution of Engineers of Kenya

24.5.2 The institution written to first by the aggrieved party shall take precedence over all other institutions.

246 Alternative Arbitration Proceedings

24.6.1 Alternatively, the Parties may refer the matter to the Nairobi Centre for International Arbitration (NCIA) which offers a neutral venue for the conduct of national and international arbitration with commitment to providing institutional support to the arbitral process.

247 Failure to Comply with Arbitrator's Decision

24.7.1 The award of such Arbitrator shall be final and binding upon the parties.

24.7.2 In the event that a Party fails to comply with a final and binding Arbitrator's decision, then the other Party may, without prejudice to any other rights it may have, refer the matter to a competent court of law.

248 Contract operations to continue

24.8.1 Notwithstanding any reference to arbitration herein,

a) the parties shall continue to perform their respective obligations under the Contract unless they otherwise agree; and
b) the Procuring Entity shall pay the Contractor any monies due the Contractor.

25. Fraud and Corruption

25.1 The Government requires compliance with the country's Anti-Corruption laws and its prevailing sanctions policies and procedures as set forth in the Constitution of Kenya and its Statutes.

25.2 The Procuring Entity requires the Contractor to disclose any commissions or fees that may have been paid or are to be paid to agents or any other party with respect to the bidding process or execution of the Contract. The information disclosed must include at least the name and address of the agent or other party, the amount and currency, and the purpose of the commission, gratuity or fee.

B. Time Control

26. Program

26.1 Within the time stated in the SCC, after the date of the Letter of Acceptance, the Contractor shall submit to the Project Manager for approval a Program showing the general methods, arrangements, order, and timing for all the activities in the Works. In the case of a lump sum contract, the activities in the Program shall be consistent with those in the Activity Schedule.

26.2 An update of the Program shall be a program showing the actual progress achieved on each activity and the effect of the progress achieved on the timing of the remaining work, including any changes to the sequence of the activities.

26.3 The Contractor shall submit to the Project Manager for approval an updated Program at intervals no longer than the period stated in the SCC. If the Contractor does not submit an updated Program within this period, the Project Manager may withhold the amount stated in the SCC from the next payment certificate and continue to withhold this amount until the next payment after the date on which the overdue Program has been submitted. In the case of a lump sum contract, the Contractor shall provide an updated Activity Schedule within 14 days of being instructed to by the Project Manager.

26.4 The Project Manager's approval of the Program shall not alter the Contractor's obligations. The Contractor may revise the Program and submit it to the Project Manager again at any time. A revised Program shall show the effect of Variations and Compensation Events.

27. Extension of the Intended Completion Date

27.1 The Project Manager shall extend the Intended Completion Date if a Compensation Event occurs or a Variation is issued which makes it impossible for Completion to be achieved by the Intended Completion Date without the Contractor taking steps to accelerate the remaining work, which would cause the Contractor to incur additional cost.

27.2 The Project Manager shall decide whether and by how much to extend the Intended Completion Date within 21 days of the Contractor asking the Project Manager for a decision upon the effect of a Compensation Event or Variation and submitting full supporting information. If the Contractor has failed to give early warning of a delay or has failed to cooperate in dealing with a delay, the delay by this failure shall not be considered in assessing the new Intended Completion Date.

28. Acceleration

28.1 When the Procuring Entity wants the Contractor to finish before the Intended Completion Date, the Project Manager shall obtain priced proposals for achieving the necessary acceleration from the Contractor. If the Procuring Entity accepts these proposals, the Intended Completion Date shall be adjusted accordingly and confirmed by both the Procuring Entity and the Contractor.

28.2 If the Contractor's priced proposals for an acceleration are accepted by the Procuring Entity, they are incorporated in the Contract Price and treated as a Variation.

29. Delays Ordered by the Project Manager

29.1 The Project Manager may instruct the Contractor to delay the start or progress of any activity within the Works.

30. Management Meetings

30.1 Either the Project Manager or the Contractor may require the other to attend a management meeting. The business of a management meeting shall be to review the plans for remaining work and to deal with matters raised in accordance with the early warning procedure.

30.2 The Project Manager shall record the business of management meetings and provide copies of the record to those attending the meeting and to the Procuring Entity. The responsibility of the parties for actions to be taken shall be decided by the Project Manager either at the management meeting or after the management meeting and stated in writing to all who attended the meeting.

31. Early Warning

31.1 The Contractor shall warn the Project Manager at the earliest opportunity of specific likely future events or circumstances that may adversely affect the quality of the work, increase the Contract Price, or delay the execution of the Works. The Project Manager may require the Contractor to provide an estimate of the expected effect of the future event or circumstance on the Contract Price and Completion Date. The estimate shall be provided by the Contractor as soon as reasonably possible.

31.2 The Contractor shall cooperate with the Project Manager in making and considering proposals for how the effect of such an event or circumstance can be avoided or reduced by anyone involved in the work and in carrying out any resulting instruction of the Project Manager.

C. Quality Control

32. Identifying Defects

32.1 The Project Manager shall check the Contractor's work and notify the Contractor of any Defects that are found. Such checking shall not affect the Contractor's responsibilities. The Project Manager may instruct the Contractor to search for a Defect and to uncover and test any work that the Project Manager considers may have a Defect.

33. Tests

33.1 If the Project Manager instructs the Contractor to carry out a test not specified in the Specification to check whether any work has a Defect and the test shows that it does, the Contractor shall pay for the test and any samples. If there is no Defect, the test shall be a Compensation Event.

34. Correction of Defects

34.1 The Project Manager shall give notice to the Contractor of any Defects before the end of the Defects Liability Period, which begins at Completion, and is defined in the SCC. The Defects Liability Period shall be extended for as long as Defects remain to be corrected.

34.2 Every time notice of a Defect is given, the Contractor shall correct the notified Defect within the length of time specified by the Project Manager's notice.

35. Uncorrected Defects

35.1 If the Contractor has not corrected a Defect within the time specified in the Project Manager's notice, the Project Manager shall assess the cost of having the Defect corrected, and the Contractor shall pay this amount.

D. Cost Control

36. Contract Price[7]

36.1 The Bill of Quantities shall contain priced items for the Works to be performed by the Contractor. The Bill of Quantities is used to calculate the Contract Price. The Contractor will be paid for the quantity of the work accomplished at the rate in the Bill of Quantities for each item.

37. Changes in the Contract Price[8]

37.1 If the final quantity of the work done differs from the quantity in the Bill of Quantities for the particular item by more than 25 percent, provided the change exceeds 1 percent of the Initial Contract Price, the Project Manager shall adjust the rate to allow for the change. The Project Manager shall not adjust rates from changes in quantities if thereby the Initial Contract Price is exceeded by more than 15 percent, except with the prior approval of the Procuring Entity.

37.2 If requested by the Project Manager, the Contractor shall provide the Project Manager with a detailed cost breakdown of any rate in the Bill of Quantities.

38. Variations

38.1 All Variations shall be included in updated Programs9 produced by the Contractor.

38.2 The Contractor shall provide the Project Manager with a quotation for carrying out the Variation when requested to do so by the Project Manager. The Project Manager shall assess the quotation, which shall be given within seven (7) days of the request or within any longer period stated by the Project Manager and before the Variation is ordered.

38.3 If the Contractor's quotation is unreasonable, the Project Manager may order the Variation and make a change to the Contract Price, which shall be based on the Project Manager's own forecast of the effects of the Variation on the Contractor's costs.

38.4 If the Project Manager decides that the urgency of varying the work would prevent a quotation being given and considered without delaying the work, no quotation shall be given and the Variation shall be treated as a Compensation Event.

---

[7] *In lump sum contracts, replace GCC Sub-Clauses 36.1 as follows:*

36.1 The Contractor shall provide updated Activity Schedules within 14 days of being instructed to by the Project Manager. The Activity Schedule shall contain the priced activities for the Works to be performed by the Contractor. The Activity Schedule is used to monitor and control the performance of activities on which basis the Contractor will be paid. If payment for materials on site shall be made separately, the Contractor shall show delivery of Materials to the Site separately on the Activity Schedule.

[8] *In lump sum contracts, replace entire GCC Clause 37 with new GCC Sub-Clause 37.1, as follows:*

The Activity Schedule shall be amended by the Contractor to accommodate changes of Program or method of working made at the Contractor's own discretion. Prices in the Activity Schedule shall not be altered when the Contractor makes such changes to the Activity Schedule.

[9] *In lump sum contracts, add "and Activity Schedules" after "Programs."* [10] *In lump sum contracts, delete this paragraph.*

38.5 The Contractor shall not be entitled to additional payment for costs that could have been avoided by giving early warning

38.6 If the work in the Variation corresponds to an item description in the Bill of Quantities and if, in the opinion of the Project Manager, the quantity of work above the limit stated in Sub-Clause 39.1 or the timing of its execution do not cause the cost per unit of quantity to change, the rate in the Bill of Quantities shall be used to calculate the value of the Variation. If the cost per unit of quantity changes, or if the nature or timing of the work in the Variation does not correspond with items in the Bill of Quantities, the quotation by the Contractor shall be in the form of new rates for the relevant items of work

38.7 Value Engineering: The Contractor may prepare, at its own cost, a value engineering proposal at any time during the performance of the contract. The value engineering proposal shall, at a minimum, include the following;

a) the proposed change(s), and a description of the difference to the existing contract requirements;
b) a full cost/benefit analysis of the proposed change(s) including a description and estimate of costs (including life cycle costs) the Procuring Entity may incur in implementing the value engineering proposal; and
c) a description of any effect(s) of the change on performance/functionality.

38.8 The Procuring Entity may accept the value engineering proposal if the proposal demonstrates

benefits that:

a) accelerate the contract completion period; or
b) reduce the Contract Price or the life cycle costs to the Procuring Entity; or
c) improve the quality, efficiency, safety or sustainability of the Facilities; or
d) yield any other benefits to the Procuring Entity, without compromising the functionality of the Works.

38.9 If the value engineering proposal is approved by the Procuring Entity and results in:

a) a reduction of the Contract Price; the amount to be paid to the Contractor shall be the **percentage specified in the SCC** of the reduction in the Contract Price; or
b) an increase in the Contract Price; but results in a reduction in life cycle costs due to any benefit described in (a) to (d) above, the amount to be paid to the Contractor shall be the full increase in the Contract Price.

39. Cash Flow Forecasts

39.1 When the Program[11], is updated, the Contractor shall provide the Project Manager with an updated cash flow forecast. The cash flow forecast shall include different currencies, as defined in the Contract, converted as necessary using the Contract exchange rates.

40. Payment Certificates

40.1 The Contractor shall submit to the Project Manager monthly statements of the estimated value of the work executed less the cumulative amount certified previously.

40.2 The Project Manager shall check the Contractor's monthly statement and certify the amount to be paid to the Contractor.

40.3 The value of work executed shall be determined by the Project Manager.

40.4 The value of work executed shall comprise the value of the quantities of work in the Bill of Quantities that have been completed12.

40.5 The value of work executed shall include the valuation of Variations and Compensation Events.

40.6 The Project Manager may exclude any item certified in a previous certificate or reduce the proportion of any item previously certified in any certificate in the light of later information.

40.7 Where the contract price is different from the corrected tender price, in order to ensure the contractor is not paid less or more relative to the contract price (which would be the tender price), payment valuation certificates and variation orders on omissions and additions valued based on rates in the Bill of Quantities or schedule of rates in the Tender, will be adjusted by a plus or minus percentage. The percentage already worked out during tender evaluation is worked out as follows: *(corrected tender price – tender price) / tender price X 100*.

41. Payments

41.1 Payments shall be adjusted for deductions for advance payments and retention. The Procuring Entity shall pay the Contractor the amounts certified by the Project Manager within 30 days of the date of each certificate. If the Procuring Entity makes a late payment, the Contractor shall be paid interest on the late payment in the next payment. Interest shall be calculated from the date by which the payment should have been made up to the date when the late payment is made at the prevailing rate of interest for commercial borrowing for each of the currencies in which payments are made.

41.2 If an amount certified is increased in a later certificate or as a result of an award by the Adjudicator or an Arbitrator, the Contractor shall be paid interest upon the delayed payment as set out in this clause. Interest shall be calculated from the date upon which the increased amount would have been certified in the absence of dispute.

41.3 Unless otherwise stated, all payments and deductions shall be paid or charged in the proportions of currencies comprising the Contract Price.

41.4 Items of the Works for which no rate or price has been entered in shall not be paid for by the Procuring Entity and shall be deemed covered by other rates and prices in the Contract.

42. Compensation Events

42.1 The following shall be Compensation Events:

d) The Procuring Entity does not give access to a part of the Site by the Site Possession Date pursuant to GCC Sub-Clause 20.1.

e) The Procuring Entity modifies the Schedule of Other Contractors in a way that affects the work of the Contractor under the Contract.

f) The Project Manager orders a delay or does not issue Drawings, Specifications, or instructions required for execution of the Works on time.

g) The Project Manager instructs the Contractor to uncover or to carry out additional tests upon work, which is then found to have no Defects.

h) The Project Manager unreasonably does not approve a subcontract to be let.

i) Ground conditions are substantially more adverse than could reasonably have been assumed before issuance of the Letter of Acceptance from the information issued to bidders (including the Site Investigation Reports), from information available publicly and from a visual inspection of the Site.

j) The Project Manager gives an instruction for dealing with an unforeseen condition, caused by the Procuring Entity, or additional work required for safety or other reasons.

k) Other contractors, public authorities, utilities, or the Procuring Entity does not work within the dates and other constraints stated in the Contract, and they cause delay or extra cost to the Contractor.

l) The advance payment is delayed.

m) The effects on the Contractor of any of the Procuring Entity's Risks.

n) The Project Manager unreasonably delays issuing a Certificate of Completion.

42.2 If a Compensation Event would cause additional cost or would prevent the work being completed before the Intended Completion Date, the Contract Price shall be increased and/or the Intended Completion Date shall be extended. The Project Manager shall decide whether and by how much the Contract Price shall be increased and whether and by how much the Intended Completion Date shall be extended.

42.3 As soon as information demonstrating the effect of each Compensation Event upon the Contractor's forecast cost has been provided by the Contractor, it shall be assessed by the Project Manager, and the Contract Price shall be adjusted accordingly. If the Contractor's forecast is deemed unreasonable, the Project Manager shall adjust the Contract Price based on the Project Manager's own forecast. The Project Manager shall assume that the Contractor shall react competently and promptly to the event.

---

[11] *In lump sum contracts, add "or Activity Schedule" after "Program."*

[12] *In lump sum contracts, replace this paragraph with the following: "The value of work executed shall comprise the value of completed activities in the Activity Schedule."*

42.4 The Contractor shall not be entitled to compensation to the extent that the Procuring Entity's interests are adversely affected by the Contractor's not having given early warning or not having cooperated with the Project Manager.

43. Tax

43.1 The Project Manager shall adjust the Contract Price if taxes, duties, and other levies are changed between the date 30 days before the submission of bids for the Contract and the date of the last Completion certificate. The adjustment shall be the change in the amount of tax payable by the Contractor, provided such changes are not already reflected in the Contract Price or are a result of GCC Clause 44.

44. Currency y of Payment

44.1 All payments under the contract shall be made in Kenya Shillings

45. Price Adjustment

45.1 Prices shall be adjusted for fluctuations in the cost of inputs only if **provided for in the SCC.** If so provided, the amounts certified in each payment certificate, before deducting for Advance Payment, shall be adjusted by applying the respective price adjustment factor to the payment amounts due in each currency. A separate formula of the type specified below applies:

$$P = A + B\ Im/Io$$

where: P is the adjustment factor for the portion of the Contract Price payable.

A and B are coefficients[13] **specified in the SCC,** representing the non-adjustable and adjustable portions, respectively, of the Contract Price payable and Im is the index prevailing at the end of the month being invoiced and IOC is the index prevailing 30 days before Bid opening for inputs payable.

45.2 If the value of the index is changed after it has been used in a calculation, the calculation shall be corrected and an adjustment made in the next payment certificate. The index value shall be deemed to take account of all changes in cost due to fluctuations in costs.

46. Retention

46.1 The Procuring Entity shall retain from each payment due to the Contractor the proportion stated in the **SCC** until Completion of the whole of the Works.

46.2 Upon the issue of a Certificate of Completion of the Works by the Project Manager, in accordance with GCC 53.1, half the total amount retained shall be repaid to the Contractor and half when the Defects Liability Period has passed and the Project Manager has certified that all Defects notified by the Project Manager to the Contractor before the end of this period have been corrected. The Contractor may substitute retention money with an "on demand" Bank guarantee.

47. Liquidated Damages

47.1 The Contractor shall pay liquidated damages to the Procuring Entity at the rate per day stated in the **SCC** for each day that the Completion Date is later than the Intended Completion Date. The total amount of liquidated damages shall not exceed the amount defined in the SCC. The Procuring Entity may deduct liquidated damages from payments due to the Contractor. Payment of liquidated damages shall not affect the Contractor's liabilities.

47.2 If the Intended Completion Date is extended after liquidated damages have been paid, the Project Manager shall correct any overpayment of liquidated damages by the Contractor by adjusting the next payment certificate. The Contractor shall be paid interest on the overpayment, calculated from the date of payment to the date of repayment, at the rates specified in GCC Sub-Clause 41.1.

48. Bonus

48.1 The Contractor shall be paid a Bonus calculated at the rate per calendar day **stated in the SCC** for each day (less any days for which the Contractor is paid for acceleration) that the Completion is

earlier than the Intended Completion Date. The Project Manager shall certify that the Works are complete, although they may not be due to be complete.

49. Advance Payment

49.1 The Procuring Entity shall make advance payment to the Contractor of the amounts stated in the **SCC** by the date stated in the **SCC**, against provision by the Contractor of an Unconditional Bank Guarantee in a form and by a bank acceptable to the Procuring Entity in amounts and currencies equal to the advance payment. The Guarantee shall remain effective until the advance payment has been repaid, but the amount of the Guarantee shall be progressively reduced by the amounts repaid by the Contractor. Interest shall not be charged on the advance payment.

49.2 The Contractor is to use the advance payment only to pay for Equipment, Plant, Materials, and mobilization expenses required specifically for execution of the Contract. The Contractor shall demonstrate that advance payment has been used in this way by supplying copies of invoices or other documents to the Project Manager.

49.3 The advance payment shall be repaid by deducting proportionate amounts from payments otherwise due to the Contractor, following the schedule of completed percentages of the Works on a payment basis. No account shall be taken of the advance payment or its repayment in assessing valuations of work done, Variations, price adjustments, Compensation Events, Bonuses, or Liquidated Damages.

50. Securities

50.1 The Performance Security shall be provided to the Procuring Entity no later than the date specified in the Letter of Acceptance and shall be issued in an amount **specified in the SCC,** by a bank or surety acceptable to the Procuring Entity, and denominated in the types and proportions of the currencies in which the Contract Price is payable. The Performance Security shall be valid until a date 28 day from the date of issue of the Certificate of Completion in the case of a Bank Guarantee, and until one year from the date of issue of the Completion Certificate in the case of a Performance Bond.

51. Day works

51.1 If applicable, the Day works rates in the Contractor's Bid shall be used only when the Project Manager has given written instructions in advance for additional work to be paid for in that way.

51.2 All work to be paid for as Day works shall be recorded by the Contractor on forms approved by the Project Manager. Each completed form shall be verified and signed by the Project Manager within two days of the work being done.

51.3 The Contractor shall be paid for Day works subject to obtaining signed Day works forms.

52. Cost of Repairs

52.1 Loss or damage to the Works or Materials to be incorporated in the Works between the Start Date and the end of the Defects Correction periods shall be remedied by the Contractor at the Contractor's cost if the loss or damage arises from the Contractor's acts or omissions.

E. Finishing the Contract

53. Completion

53.1 The Contractor shall request the Project Manager to issue a Certificate of Completion of the Works, and the Project Manager shall do so upon deciding that the whole of the Works is completed.

54. Taking Over

54.1 The Procuring Entity shall take over the Site and the Works within seven days of the Project Manager's issuing a certificate of Completion.

55. Final Account

55.1 The Contractor shall supply the Project Manager with a detailed account of the total amount that the Contractor considers payable under the Contract before the end of the Defects Liability Period. The Project Manager shall issue a Defects Liability Certificate and certify any final payment that is

due to the Contractor within 56 days of receiving the Contractor's account if it is correct and complete. If it is not, the Project Manager shall issue within 56 days a schedule that states the scope of the corrections or additions that are necessary. If the Final Account is still unsatisfactory after it has been resubmitted, the Project Manager shall decide on the amount payable to the Contractor and issue a payment certificate.

---

[13]The sum of the two coefficients A and B should be 1 (one) in the formula for each currency. Normally, both coefficients shall be the same in the formulae for all currencies, since coefficient A, for the non-adjustable portion of the payments, is a very approximate figure (usually 0.15) to take account of fixed cost elements or other non-adjustable components. The sum of the adjustments for each currency are added to the Contract Price.

56. Operating and Maintenance Manuals

56.1 If "as built" Drawings and/or operating and maintenance manuals are required, the Contractor shall supply them by the dates stated in the SCC.

56.2 If the Contractor does not supply the Drawings and/or manuals by the dates stated in the SCC pursuant to GCC Sub-Clause 56.1, or they do not receive the Project Manager's approval, the Project Manager shall withhold the amount **stated in the SCC** from payments due to the Contractor.

57. Termination

57.1 The Procuring Entity or the Contractor may terminate the Contract if the other party causes a fundamental breach of the Contract.

57.2 Fundamental breaches of Contract shall include, but shall not be limited to, the following:

a) the Contractor stops work for 30 days when no stoppage of work is shown on the current Program and the stoppage has not been authorized by the Project Manager;
b) the Project Manager instructs the Contractor to delay the progress of the Works, and the instruction is not withdrawn within 30 days;
c) the Procuring Entity or the Contractor is made bankrupt or goes into liquidation other than for a reconstruction or amalgamation;
d) a payment certified by the Project Manager is not paid by the Procuring Entity to the Contractor within 84 days of the date of the Project Manager's certificate;
e) the Project Manager gives Notice that failure to correct a particular Defect is a fundamental breach of Contract and the Contractor fails to correct it within a reasonable period of time determined by the Project Manager;
f) the Contractor does not maintain a Security, which is required;
g) the Contractor has delayed the completion of the Works by the number of days for which the maximum amount of liquidated damages can be paid, as **defined in the SCC**; or
h) if the Contractor, in the judgment of the Procuring Entity has engaged in Fraud and Corruption, as defined in paragraph 2.2 a of the Appendix A to the GCC, in competing for or in executing the Contract, then the Procuring Entity may, after giving fourteen (14) days written notice to the Contractor, terminate the Contract and expel him from the Site.

57.3 Notwithstanding the above, the Procuring Entity may terminate the Contract for convenience.

57.4 If the Contract is terminated, the Contractor shall stop work immediately, make the Site safe and secure, and leave the Site as soon as reasonably possible.

57.5 When either party to the Contract gives notice of a breach of Contract to the Project Manager for a cause other than those listed under GCC Sub-Clause 56.2 above, the Project Manager shall decide whether the breach is fundamental or not.

58. Payment upon Termination

58.1 If the Contract is terminated because of a fundamental breach of Contract by the Contractor, the

Project Manager shall issue a certificate for the value of the work done and Materials ordered less advance payments received up to the date of the issue of the certificate and less the percentage to apply to the value of the work not completed, as specified in the SCC. Additional Liquidated Damages shall not apply. If the total amount due to the Procuring Entity exceeds any payment due to the Contractor, the difference shall be a debt payable to the Procuring Entity.

58.2 If the Contract is terminated for the Procuring Entity's convenience or because of a fundamental breach of Contract by the Procuring Entity, the Project Manager shall issue a certificate for the value of the work done, Materials ordered, the reasonable cost of removal of Equipment, repatriation of the Contractor's personnel employed solely on the Works, and the Contractor's costs of protecting and securing the Works, and less advance payments received up to the date of the certificate.

59. Property

59.1 All Materials on the Site, Plant, Equipment, Temporary Works, and Works shall be deemed to be the property of the Procuring Entity if the Contract is terminated because of the Contractor's default.

60. Release from Performance

60.1 If the Contract is frustrated by the outbreak of war or by any other event entirely outside the control of either the Procuring Entity or the Contractor, the Project Manager shall certify that the Contract has been frustrated. The Contractor shall make the Site safe and stop work as quickly as possible after receiving this certificate and shall be paid for all work carried out before receiving it and for any work carried out afterwards to which a commitment was made.

Except where otherwise specified, all Special *Conditions of Contract should be filled in by the Procuring Entity prior to issuance of the bidding document. Schedules and reports to be provided by the Procuring Entity should be annexed.*

Number of GC Clause	Amendments of, and Supplements to, Clauses in the General Conditions of Contract
A. General	
GCC 1.1 (q)	The Procuring Entity is *The Director General,* *Kenya Urban Roads Authority (KURA),* *P.O. Box 41727 - 00100* ***NAIROBI***
GCC 1.1 (u)	The Intended Completion Date for the whole of the Works shall be Eight (8) months *][If different dates are specified for completion of the Works by section ("sectional completion" or milestones), these dates should be listed here]*
GCC 1.1 (x)	The Project Manager is Director (RA & CM), Kenya Urban Roads Authority (KURA), P.O. Box 41727 - 00100 NAIROBI . who shall be referred to as **"The Engineer".** Replace "Project Manager" with "Engineer" where it applies in this document
GCC 1.1 (z)	The Site is located at *Nyanza Region in Siaya County*
GCC 1.1 (cc)	The Start Date shall be *14 days after order to commence*
GCC 1.1 (gg)	The Works consist of *Routine Maintenance and spot improvement of Road the Project*
GCC 2.2	Sectional Completions are: *[Not Applicable]*
GCC 5.1	The Project manager *[May]* delegate any of his duties and responsibilities.
GCC 8.1	Schedule of other contractors: *[Not Applicable]*
GCC 9.1	**Key Personnel** GCC 9.1 is replaced with the following: 9.1 Key Personnel are the Contractor's personnel named in this GCC 9.1 of the Special Conditions of Contract. The Contractor shall employ the Key Personnel and use the equipment identified in its Bid, to carry out the Works or other personnel and equipment approved by the Project Manager. The Project Manager shall approve any proposed replacement of Key Personnel and equipment only if their relevant qualifications or characteristics are substantially equal to or better than those proposed in the Bid. [As per the qualification and Evaluation criteria in section III]
GCC 13.1	The minimum insurance amounts and deductibles shall be (1% of the Contract Sum for insured damage): (a) for loss or damage to the Works, Plant and Materials: *[insert amounts]*. (b) For loss or damage to Equipment: *[insert amounts]*.

Number of GC Clause	Amendments of, and Supplements to, Clauses in the General Conditions of Contract
	(c) for loss or damage to property (except the Works, Plant, Materials, and Equipment) in connection with Contract *[insert amounts]*. (d) for personal injury or death: (i) of the Contractor's employees: *[amount]*. (ii) of other people: *[amount]*.
GCC 14.1	Site Data are: *[list Site Data]*
GCC 20.1	The Site Possession Date(s) shall be: *Not later than Fourteen (14) days after issuance of Order to Commence*
GCC 23.1 & GCC 23.2	Appointing Authority for the Adjudicator: *Institution of Engineers of Kenya (IEK)* *and/or Association of Consulting Engineers of Kenya (ACEK)*
	Hourly rate and types of reimbursable expenses to be paid to the Adjudicator: *[insert hourly fees and reimbursable expenses/ To be determined on case by case basis]*.
B. Time Control	
GCC 26.1	The Contractor shall submit for approval a Program for the Works within *[14]* days from the date of the Letter of Acceptance.
GCC 26.3	The period between Program updates is *[14]* days. The amount to be withheld for late submission of an updated Program is *[To be determined]*.
C. Quality Control	
GCC 34.1	The Defects Liability Period is: ***[1 Month]***. *[The Defects Liability Period is usually limited to 12 months, but could be less in very simple cases]*
D. Cost Control	
GCC 38.9	If the value engineering proposal is approved by the Procuring Entity the amount to be paid to the Contractor shall be ___% *(Not Applicable)* of the reduction in the Contract Price.
GCC 44.1	The currency of the Procuring Entity's Country is: *[KShs]*.
GCC 45.1	The Contract *[* ***"is not"]*** subject to price adjustment in accordance with GCC Clause 45, and the following information regarding coefficients *[does not"]* apply. *[Price adjustment is mandatory for contracts which provide for time of completion exceeding 18 months]* The coefficients for adjustment of prices are:(N/A) (a) *[insert percentage]* percent nonadjustable element (coefficient A). (ib) *[insert percentage]* percent adjustable element (coefficient B). (c) The Index I for shall be *[insert index]*.
GCC 46.1	The proportion of payments retained is: *[5%]* *[The retention amount is usually close to 5 percent and in no case exceeds 10 percent.]*
GCC 47.1	The liquidated damages for the whole of the Works are *[0.05% of Contract Sum]* per day.

Number of GC Clause	Amendments of, and Supplements to, Clauses in the General Conditions of Contract
	The maximum amount of liquidated damages for the whole of the Works is *[5%]* of the final Contract Price. *[Usually liquidated damages are set between 0.05 percent and 0.10 percent per day, and the total amount is not to exceed between 5 percent and 10 percent of the Contract Price. If Sectional Completion and Damages per Section have been agreed, the latter should be specified here]*
GCC 48.1	The Bonus for the whole of the Works is *[Not Applicable]* per day. The maximum amount of Bonus for the whole of the Works is *[insert percentage]* of the final Contract Price. *[If early completion would provide benefits to the* Procuring Entity*, this clause should remain; otherwise delete. The Bonus is usually numerically equal to the liquidated damages.]*
GCC 49.1	The Advance Payments shall be: *[**Not Applicable**]* and shall be paid to the Contractor no later than *[Not Applicable)]*.
GCC 50.1	**The Performance Security amount is *[1% (per cent)* *of Tender Sum in the form of Unconditional Bank Guarantee payable to the* Procuring Entity*]*** (a) Performance Security – Bank Guarantee: in the amount(s) of *[Not Applicable]* percent of the Accepted Contract Amount and in the same currency (ies) of the Accepted Contract Amount. (b) Performance Security – Performance Bond: in the amount(s) of *[insert related figure(s) depending the contract sum]* percent of the Accepted Contract Amount and in the same currency(ies) of the Accepted Contract Amount.
E. Finishing the Contract	
GCC 54.1	Taking over of any section shall only be conducted for a section which is complete with road marking and road signs installed where required.
GCC 56.1	The date by which operating and maintenance manuals are required is *[30 days]*. The date by which "as built" drawings are required is *[30 days]*.
GCC 56.2	The amount to be withheld for failing to produce "as built" drawings and/or operating and maintenance manuals by the date required in GCC 58.1 is *[**50% of the retention monies**]*.
GCC 57.2 (g)	The maximum number of days is: *[Not Applicable].*
GCC 58.1	The percentage to apply to the value of the work not completed, representing the Procuring Entity's additional cost for completing the Works, is *[Not Applicable]*.

SUMMARY OF SPECIAL CONDITIONS OF CONTRACT

CONDITIONS	GCC CLAUSE	DATA
Procuring Entity's Name and Address	1.1(q)	DIRECTOR GENERAL, KENYA URBAN ROADS AUTHORITY, BARABARA PLAZA, BLOCK D, P.O. BOX 41727-00100, **NAIROBI** Tel. No.: +254 – 020 - 8013844/0717105233 dg@kura.go.ke
Engineer's address	1.1(x)	DIRECTOR (ROAD ASSET & CORRIDOR MANA), KENYA URBAN ROADS AUTHORITY, BARABARA PLAZA, BLOCK D, P.O. BOX 41727-00100, **NAIROBI** info@kura.go.ke
Electronic transmission		NOT APPLICABLE
Possession of the site	20.1	No later than 21 days after the Order to commence. No later than the Commencement Date.
Performance Security	50.1	The performance security shall be in the form of an unconditional bank guarantee in the amount of **One (1%) percent** of the Contract Price and denominated in Kenya Shillings.
Working Hours	6.5	Normal working hours shall be 8:00 a.m. to 5:00 p.m. on weekdays, including lunch break from 1.00 p.m. to 2.00 p.m. and 8:00 a.m. to 1:00 pm on Saturdays, with Sunday being set aside as a day of rest.
Commencement of Works	1.1(cc)	Not later than 21 (Twenty-One) days after Notice of Order to Commence.
Programme of Works	26.1	Not later than 14(Fourteen) days after issuance of Order to Commence
Time for Completion	1.1 (u)	Six (9) Months.
Amount of Liquidated Damages	47.1	0.05% of the Contract Price per day
Limit of Liquidated Damages	47.1	5% (Five percent) of the Contract Price.
Defects Liability Period	34.1	3 Months
Retention Money	46.1	5% (Five percent) of Interim Payment Certificates
Cash Flow Estimate	39.1	Not later than 14 (Fourteen) days after issuance of Order to Commence
Advance Payment	49.1	NOT APPLICABLE.
Minimum Amount of Interim Payment Certificates	41	Kshs. 9,000,000.00 (Kenya Shillings Nine Million Only)

Time within which payment to be made after Interim Payment Certificate signed by Engineer	41.1	30 days
Time within which payment to be made after Final Payment Certificate signed by the Engineer	41.1	30 days
Periods for submission of insurance: **a. Evidence of insurance**	13.1	Prior to commencement of the Works, and in any case not later than 21 days after issuance of Order to Commence
Minimum amount of third-party insurance	13.1	1% of the Contract Sum. Not later than 14(Fourteen) days after issuance of Order to Commence
Appointer of Arbitrator	24.5.1	Institution of Engineers of Kenya (IEK) and/or Association of Consulting Engineers of Kenya (ACEK)
Notice to Procuring Entity and Engineer	6.1	The Procuring Entity's address is: Director General Kenya Urban Roads Authority Barabara Plaza, Block D. P.O. Box 41727 – 00100 NAIROBI. Tel. +254 020 8013844 Email: dg@kura.go.ke, Web:www.kura.go.ke The Engineers' address is: Director (Road Asset & Corridor Management) Kenya Urban Roads Authority Barabara Plaza, Block D, Airport Road P.O. Box 41727 – 00100 NAIROBI. Tel. +254 020 8013844 Email: info@kura.go.ke, Web:www.kura.go.ke **The Contractor address is:** **Name**…. ……. **P.O Box**…….. **City/Town**……. …. **Email**…….…. **Telephone**……

Signature of Tenderer…….……. Date ……

FORM No 1: NOTIFICATION OF INTENTION TO AWARD

This Notification of Intention to Award shall be sent to each Tenderer that submitted a Tender. Send this Notification to the Tenderer's Authorized Representative named in the Tender Information Form on the format below.

FORMAT

1. For the attention of Tenderer's Authorized Representative
   - *i)* Name: *[insert Authorized Representative's name]*
   - *ii)* Address: *[insert Authorized Representative's Address]*
   - *iii)* Telephone: *[insert Authorized Representative's telephone/fax numbers]*
   - *iv)* Email Address: *[insert Authorized Representative's email address]*

   [IMPORTANT: insert the date that this Notification is transmitted to Tenderers. The Notification must be sent to all Tenderers simultaneously. This means on the same date and as close to the same time as possible.]

2. Date of transmission: [*email*] on [*date*] (local time)

   This Notification is sent by (*Name and designation*) _____

3. Notification of Intention to Award

   - *i)* Procuring Entity: *[insert the name of the Procuring Entity]*
   - *ii)* Project: *[insert name of project]*
   - *iii)* Contract title: *[insert the name of the contract]*
   - *iv)* Country: *[insert country where ITT is issued]*
   - *v)* ITT No: *[insert ITT reference number from Procurement Plan]*

   This Notification of Intention to Award (Notification) notifies you of our decision to award the above contract. The transmission of this Notification begins the Standstill Period. During the Standstill Period, you may:

4. Request a debriefing in relation to the evaluation of your tender

   Submit a Procurement-related Complaint in relation to the decision to award the contract.

   a) The successful tenderer

      i) Name of successful Tender__

      ii) Address of the successful Tender __

      iii) Contract price of the successful Tender Kenya Shillings

      _____

      (in words_____)

   b) Other Tenderers

   Names of all Tenderers that submitted a Tender. If the Tender's price was evaluated include the evaluated price as well as the Tender price as read out. For Tenders not evaluated, give one main reason the Tender was unsuccessful.

SNo	Name of Tender	Tender Price as read out	Tender's evaluated price (Note a)	One Reason Why not Evaluated
1				
2				
3				
4				

(Note a) State NE if not evaluated

5. How to request a debriefing

a) DEADLINE: The deadline to request a debriefing expires at midnight on [*insert date*] (*local time*).

b) You may request a debriefing in relation to the results of the evaluation of your Tender. If you decide to request a debriefing your written request must be made within three (5) Business Days of receipt of this Notification of Intention to Award.

c) Provide the contract name, reference number, name of the Tenderer, contact details; and address the request for debriefing as follows:

i) Attention: [*insert full name of person, if applicable*]

ii) Title/position: [*insert title/position*]

ii) Agency: [*insert name of Procuring Entity*]

iii) Email address: [*insert email address*]

d) If your request for a debriefing is received within the 3 Days deadline, we will provide the debriefing within five (3) Business Days of receipt of your request. If we are unable to provide the debriefing within this period, the Standstill Period shall be extended by five (3) Days after the date that the debriefing is provided. If this happens, we will notify you and confirm the date that the extended Standstill Period will end.

e) The debriefing may be in writing, by phone, video conference call or in person. We shall promptly advise you in writing how the debriefing will take place and confirm the date and time.

f) If the deadline to request a debriefing has expired, you may still request a debriefing. In this case, we will provide the debriefing as soon as practicable, and normally no later than fifteen (15) Days from the date of publication of the Contract Award Notice.

6. How to make a complaint

a) Period: Procurement-related Complaint challenging the decision to award shall be submitted by midnight, [*insert date*] (local time).

b) Provide the contract name, reference number, name of the Tenderer, contact details; and address the Procurement-related Complaint as follows:

i) Attention: [*insert full name of person, if applicable*]

ii) Title/position: [*insert title/position*]

iii) Agency: [*insert name of Procuring Entity*]

iv) Email address: [*insert email address*]

c) At this point in the procurement process, you may submit a Procurement-related Complaint challenging the decision to award the contract. You do not need to have requested, or received, a debriefing before making this complaint. Your complaint must be submitted within the Standstill Period and received by us before the Standstill Period ends.

d) Further information: For more information refer to the Public Procurement and

Disposals Act 2015 and its Regulations available from the Website info@ppra.go.ke or complaints@ppra.go.ke.

You should read these documents before preparing and submitting your complaint.

e) There are four essential requirements:

i) You must be an 'interested party'. In this case, that means a Tenderer who submitted a Tender in this tendering process, and is the recipient of a Notification of Intention to Award.

ii) The complaint can only challenge the decision to award the contract.

iii) You must submit the complaint within the period stated above.

iv) You must include, in your complaint, all of the information required to support your complaint.

7. Standstill Period

i) DEADLINE: The Standstill Period is due to end at midnight on [*insert date*] (local time).

ii) The Standstill Period lasts ten (14) Days after the date of transmission of this Notification of Intention to Award.

iii) The Standstill Period may be extended as stated in paragraph Section 5 (d) above.

If you have any questions regarding this Notification please do not hesitate to contact us. On behalf of the Procuring Entity:

Signature:_____ **Name:**_____

Title/position:_____

Telephone:_____ **Email:** _____

FORM NO. 2 ~ REQUEST FOR REVIEW

FORM FOR REVIEW (r.203 (1))

PUBLIC PROCUREMENT ADMINISTRATIVE REVIEW BOARD

APPLICATION NO……. OF……..….20……...

BETWEEN

……...……. APPLICANT (Review Board)

AND

……RESPONDENT (Procuring Entity)

Request for review of the decision of the…… (Name of the Procuring Entity of ……dated the…day of ……20…….in the matter of Tender No……..…of ……..20….. for .....(Tender description).

REQUEST FOR REVIEW

I/We……, the above named Applicant(s), of address: Physical address…….P. O. Box No……. Tel. No…….Email ……, hereby request the Public Procurement Administrative Review Board to review the whole/part of the above mentioned decision on the following grounds , namely:

1.

2.

By this memorandum, the Applicant requests the Board for an order/orders that:

1.

2.

SIGNED ……(Applicant) Dated on…….day of ……/…20……

FOR OFFICIAL USE ONLY Lodged with the Secretary Public Procurement Administrative Review Board on……day of ……....20…….……

SIGNED

Board Secretary

FORM NO 3: NOTIFICATION OF AWARD ~ LETTER OFACCEPTANCE

[letterhead paper of the Procuring Entity] [date]

To: *[name and address of the Contractor]*

This is to notify you that your Tender dated *[date]* for execution of the *[name of the Contract and identification number, as given in the Contract Data]* for the Accepted Contract Amount *[amount in numbers and words] [name of currency]*, as corrected and modified in accordance with the Instructions to Tenderers, is hereby accepted by …… (*name of Procuring Entity)*.

You are requested to furnish the Performance Security within 30 days in accordance with the Conditions of Contract, using, for that purpose, one of the Performance Security Forms included in Section VIII, Contract Forms, of the Tender Document.

Authorized Signature:.....

Name and Title of Signatory:.....

Name of Procuring Entity.....

Attachment: *Contract Agreement*.....

FORM NO 4: CONTRACT AGREEMENT

THIS AGREEMENT made the_____day of_____, 20___, between **KENYA URBAN ROADS AUTHORITY** of **P.O BOX 41727-00100 NAIROBI** (hereinafter "the Procuring Entity"), of the one part, and_____
of_____(hereinafter "the Contractor"), of the other part:

WHEREAS the Procuring Entity desires that the Works known as **UPGRADING OF SAVANNA JUNCTION - AMBIRA HOSPITAL ROAD AND ACCESS TO UGUNJA KMTC ROAD (UGUNJA, SIAYA COUNTY) KURA/RMLF/HQ/307/2026-2027** should be executed by the Contractor, and has accepted a Tender by the Contractor for the execution and completion of these Works and the remedying of any defects therein,

The Procuring Entity and the Contractor agree as follows:

1. In this Agreement words and expressions shall have the same meanings as are respectively assigned to them in the Contract documents referred to.

2. The following documents shall be deemed to form and be read and construed as part of this Agreement. This Agreement shall prevail over all other Contract documents.
   a) the Letter of Acceptance
   b) the Letter of Tender
   c) the addenda Nos_____(if any)
   d) the Special Conditions of Contract
   e) the General Conditions of Contract;
   f) the Specifications
   g) the Drawings*;*and
   h) the completed Schedules and any other documents forming part of the contract.

3. In consideration of the payments to be made by the Procuring Entity to the Contractor as specified in this Agreement, the Contractor hereby covenants with the Procuring Entity to execute the Works and to remedy defects therein in conformity in all respects with the provisions of the Contract.

4. The Procuring Entity hereby covenants to pay the Contractor in consideration of the execution and completion of the Works and the remedying of defects therein, the Contract Price or such other sum as may become payable under the provisions of the Contract at the times and in the manner prescribed by the Contract.

IN WITNESS whereof the parties hereto have caused this Agreement to be executed in accordance with the Laws of Kenya on the day, month and year specified above.

Signed and sealed by_____(for the Procuring Entity)

Signed and sealed by_____(for the Contractor).

FORM NO. 5 ~ PERFORMANCE SECURITY

[Option 1 ~ Unconditional Demand Bank Guarantee]

[Guarantor letterhead]

Beneficiary:_____*[insert name and Address of* Procuring Entity / **Date:**___

_____*[Insert date of issue]*

Guarantor: [*Insert name and address of place of issue, unless indicated in the letterhead]*

1. We have been informed that_____(hereinafter called "the Contractor") has entered into Contract No._____dated_____with (*name of Procuring Entity*)_____(the Procuring Entity as the Beneficiary), for the execution of _____(hereinafter called "the Contract").

2. Furthermore, we understand that, according to the conditions of the Contract, a performance guarantee is required.

3. At the request of the Contractor, we as Guarantor, hereby irrevocably undertake to pay the Beneficiary any sum or sums not exceeding in total an amount of_____(*in words*),[1] such sum being payable in the types and proportions of currencies in which the Contract Price is payable, upon receipt by us of the Beneficiary's complying demand supported by the Beneficiary's statement, whether in the demand itself or in a separate signed document accompanying or identifying the demand, stating that the Applicant is in breach of its obligation(s) under the Contract, without the Beneficiary needing to prove or to show grounds for your demand or the sum specified therein.

4. This guarantee shall expire, no later than the …. Day of ……, 2.....[2], and any demand for payment under it must be received by us at the office indicated above on or before that date.

5. The Guarantor agrees to a one-time extension of this guarantee for a period not to exceed *[six months] [one year],* in response to the Beneficiary's written request for such extension, such request to be presented to the Guarantor before the expiry of the guarantee."

[Name of Authorized Official, signature(s) and seals/stamps].

Note: *All italicized text (including footnotes) is for use in preparing this form and shall be deleted from the final product.*

[1] *The Guarantor shall insert an amount representing the percentage of the Accepted Contract Amount specified in the Letter of Acceptance, less provisional sums, if any, and denominated either in the currency of the Contract or a freely convertible currency acceptable to the Beneficiary.*

[2] *Insert the date twenty-eight days after the expected completion date as described in GC Clause 11.9. The Procuring Entity should note that in the event of an extension of this date for completion of the Contract, the Procuring Entity would need to request an extension of this guarantee from the Guarantor. Such request must be in writing and must be made prior to the expiration date established in the guarantee.*

FORM No. 6 ~ PERFORMANCE SECURITY

[Option 2– Performance Bond]

[Note: Procuring Entities are advised to use Performance Security – Unconditional Demand Bank Guarantee instead of Performance Bond due to difficulties involved in calling Bond holder to action]

[Guarantor letterhead or SWIFT identifier code]

Beneficiary:_____*[insert name and Address of* Procuring Entity*]* **Date:**_____*[Insert date of issue].*

PERFORMANCE BOND No.:_____

Guarantor: [*Insert name and address of place of issue, unless indicated in the letterhead]*

1. By this Bond_____as Principal (hereinafter called "the Contractor") and_____] as Surety (hereinafter called "the Surety"), are held and firmly bound unto_____] as Obligee (hereinafter called "the Procuring Entity") in the amount of_____for the payment of which sum well and truly to be made in the types and proportions of currencies in which the Contract Price is payable, the Contractor and the Surety bind themselves, their heirs, executors, administrators, successors and assigns, jointly and severally, firmly by these presents.

2. WHEREAS the Contractor has entered into a written Agreement with the Procuring Entity dated the _____day of_____, 20 , for_____in accordance with the documents, plans, specifications, and amendments thereto, which to the extent herein provided for, are by reference made part hereof and are hereinafter referred to as the Contract.

3. NOW, THEREFORE, the Condition of this Obligation is such that, if the Contractor shall promptly and faithfully perform the said Contract (including any amendments thereto), then this obligation shall be null and void; otherwise, it shall remain in full force and effect. Whenever the Contractor shall be, and declared by the Procuring Entity to be, in default under the Contract, the Procuring Entity having performed the Procuring Entity's obligations thereunder, the Surety may promptly remedy the default, or shall promptly:
   1) complete the Contract in accordance with its terms and conditions; or
   2) obtain a tender or tenders from qualified tenderers for submission to the Procuring Entity for completing the Contract in accordance with its terms and conditions, and upon determination by the Procuring Entity and the Surety of the lowest responsive Tenderers, arrange for a Contract between such Tenderer, and Procuring Entity and make available as work progresses (even though there should be a default or a succession of defaults under the Contract or Contracts of completion arranged under this paragraph) sufficient funds to pay the cost of completion less the Balance of the Contract Price; but not exceeding, including other costs and damages for which the Surety may be liable hereunder, the amount set forth in the first paragraph hereof. The term "Balance of the Contract Price," as used in this paragraph, shall mean the total amount payable by Procuring Entity to Contractor under the Contract, less the amount properly paid by Procuring Entity to Contractor; or
   3) pay the Procuring Entity the amount required by Procuring Entity to complete the Contract in accordance with its terms and conditions up to a total not exceeding the amount of this Bond.

4. The Surety shall not be liable for a greater sum than the specified penalty of this Bond.

5. Any suit under this Bond must be instituted before the expiration of one year from the date of the issuing of the Taking-Over Certificate. No right of action shall accrue on this Bond to or for the use of any person or corporation other than the Procuring Entity named herein or the heirs, executors, administrators, successors, and assigns of the Procuring Entity.

6. In testimony whereof, the Contractor has hereunto set his hand and affixed his seal, and the Surety has caused these presents to be sealed with his corporate seal duly attested by the signature of his legal representative, this day of_____20_____.

SIGNED ON_____on

behalf_____ of By_____in the capacity of

In the presence of _____

SIGNED ON_____on behalf of By_

_____in the capacity of In

the presence of _____

FORM NO. 7 - ADVANCE PAYMENT SECURITY

[Demand Bank Guarantee]

[Guarantor letterhead]

Beneficiary:_____*[Insert name and Address of* Procuring Entity*]*

Date:_____*[Insert date of issue]*

ADVANCE PAYMENT GUARANTEE No.:_____*[Insert guarantee reference number]*

Guarantor:_____**[***Insert name and address of place of issue, unless indicated in the letterhead]*

1. We have been informed that_____(hereinafter called "the Contractor") has entered into Contract No._*dated*_____with the Beneficiary, for the execution of _____ (hereinafter called "the Contract").

2. Furthermore, we understand that, according to the conditions of the Contract, an advance payment in the sum _____(*in words*) is to be made against an advance payment guarantee.

3. At the request of the Contractor, we as Guarantor, hereby irrevocably undertake to pay the Beneficiary any sum or sums not exceeding in total an amount of_____(*in words*_____)[1] upon receipt by us of the Beneficiary's complying demand supported by the Beneficiary's statement, whether in the demand itself or in a separate signed document accompanying or identifying the demand, stating either that the Applicant:
   a) has used the advance payment for purposes other than the costs of mobilization in respect of the Works; or
   b) has failed to repay the advance payment in accordance with the Contract conditions, specifying the amount which the Applicant has failed to repay.

4. A demand under this guarantee may be presented as from the presentation to the Guarantor of a certificate from the Beneficiary's bank stating that the advance payment referred to above has been credited to the Contractor on its account number____at____.

5. The maximum amount of this guarantee shall be progressively reduced by the amount of the advance payment repaid by the Contractor as specified in copies of interim statements or payment certificates which shall be presented to us. This guarantee shall expire, at the latest, upon our receipt of a copy of the interim payment certificate indicating that ninety (90) percent of the Accepted Contract Amount, less provisional sums, has been certified for payment, or on the day of_____, 2 ,[2] whichever is earlier. Consequently, any demand for payment under this guarantee must be received by us at this office on or before that date.

6. The Guarantor agrees to a one-time extension of this guarantee for a period not to exceed *[six months][one year],* in response to the Beneficiary's written request for such extension, such request to be presented to the Guarantor before the expiry of the guarantee.

[Name of Authorized Official, signature(s) and seals/stamps]

Note: All italicized text (including footnotes) is for use in preparing this form and shall be deleted from the final product.

[1] *The Guarantor shall insert an amount representing the amount of the advance payment and denominated either in the currency of the advance payment as specified in the Contract.*

[2] *Insert the expected expiration date of the Time for Completion. The Procuring Entity should note that in the event of an extension of the time for completion of the Contract, the Procuring Entity would need to request an extension of this guarantee from the Guarantor. Such request must be in writing and must be made prior to the expiration date established in the guarantee.*

FORM NO. 8 ~ RETENTION MONEY SECURITY

[Demand Bank Guarantee]

[Guarantor letterhead]

Beneficiary: _____*[Insert name and Address of* Procuring Entity*]*

Date:_____*[Insert date of issue]*

Advance payment guarantee no. *[Insert guarantee reference number]*

Guarantor: [*Insert name and address of place of issue, unless indicated in the letterhead]*

1. We have been informed that_____*[insert name of Contractor, which in the case of a joint venture shall be the name of the joint venture]* (hereinafter called "the Contractor") has entered into Contract No. _____*[insert reference number of the contract]* dated_____with the Beneficiary, for the execution of_____*[insert name of contract and brief description of* Works*]* (hereinafter called "the Contract").

2. Furthermore, we understand that, according to the conditions of the Contract, the Beneficiary retains moneys up to the limit set forth in the Contract ("the Retention Money"), and that when the Taking-Over Certificate has been issued under the Contract and the first half of the Retention Money has been certified for payment, and payment of /insert the second half of the Retention Money] is to be made against a Retention Money guarantee.

3. At the request of the Contractor, we, as Guarantor, hereby irrevocably undertake to pay the Beneficiary any sum or sums not exceeding in total an amount of *[insert amount in figures]* (*[insert amount in words*_____*])*[1] upon receipt by us of the Beneficiary's complying demand supported by the Beneficiary's statement, whether in the demand itself or in a separate signed document accompanying or identifying the demand, stating that the Contractor is in breach of its obligation(s) under the Contract, without your needing to prove or show grounds for your demand or the sum specified therein.

4. A demand under this guarantee may be presented as from the presentation to the Guarantor of a certificate from the Beneficiary's bank stating that the second half of the Retention Money as referred to above has been credited to the Contractor on its account number___at_____*[insert name and address of Applicant's bank].*

5. This guarantee shall expire no later than the …..... Day of ….....……, 2.....…[2], and any demand for payment under it must be received by us at the office indicated above on or before that date.

6. The Guarantor agrees to a one-time extension of this guarantee for a period not to exceed *[six months] [one year],* in response to the Beneficiary's written request for such extension, such request to be presented to the Guarantor before the expiry of the guarantee.

[Name of Authorized Official, signature(s) and seals/stamps]

Note: All italicized text (including footnotes) is for use in preparing this form and shall be deleted from the final product.

[1] *The Guarantor shall insert an amount representing the amount of the second half of the Retention Money.*

[2] *Insert a date that is twenty-eight days after the expiry of retention period after the actual completion date of the contract. The Procuring Entity should note that in the event of an extension of this date for completion of the Contract, the Procuring Entity would need to request an extension of this guarantee from the Guarantor. Such request must be in writing and must be made prior to the expiration date established in the guarantee.*