REPUBLIC OF KENYA

KENYA URBAN ROADS AUTHORITY
Transforming Urban Mobility

TENDER NAME: BUTERE TOWN ROADS PHASE 1

TENDER NO: KURA/RMLF/HQ/308/2026-2027

(ALL CATEGORY)

NOVEMBER, 2026

DIRECTOR-(RACM) KENYA URBAN ROADS AUTHORITY P.O. Box 41727 - 00100 NAIROBI. TEL:+254717105233 Info@kura.go.ke	DIRECTOR GENERAL KENYA URBAN ROADS AUTHORITY P.O. Box 41727 - 00100 NAIROBI. TEL:+254717105233 dg@kura.go.ke

TABLE OF CONTENTS

TABLE OF CONTENTS **1**

INVITATION TO TENDER **8**

PART 1 ~ TENDERING PROCEDURES **10**

SECTION I-INSTRUCTIONS TO TENDERERS 11

A GENERAL PROVISIONS *11*

1. Scope of Tender 11
2. Fraud and Corruption 11
3. Eligible Tenderers 11
4. Eligible Goods, Equipment, and Services 13
5. Tenderer's Responsibilities 13

B. CONTENTS OF TENDER DOCUMENTS *14*

6. Sections of Tender Document 14
7. Clarification of Tender Document, Site Visit, Pre-Tender Meeting 14
8. Amendment of Tender Documents 15

C. PREPARATION OF TENDERS *15*

9. Cost of Tendering 15
10. Language of Tender 15
11. Documents Comprising the Tender 15
12. Form of Tender and Schedules 16
13. Alternative Tenders 16
14. Tender Prices and Discounts 16
15. Currencies of Tender and Payment 17
16. Documents Comprising the Technical Proposal 17
17. Documents Establishing the Eligibility and Qualifications of the Tenderer 17
18. Period of Validity of Tenders 18
19. Tender Security 19
20. Format and Signing of Tender 19

D. SUBMISSION AND OPENING OF TENDERS *20*

21. Sealing and Marking of Tenders 20
22. Deadline for Submission of Tenders 20
23. Late Tenders 20
24. Withdrawal, Substitution, and Modification of Tenders 21
25. Tender Opening 21

E. EVALUATION AND COMPARISON OF TENDERS *22*

26. Confidentiality 22
27. Clarification of Tenders 22
28. Deviations, Reservations, and Omissions 22
29. Determination of Responsiveness 22
30. Non-material Non-conformities 23
31. Arithmetical Errors 23
32. Conversion to Single Currency 23
33. Margin of Preference and Reservations 23
34. Nominated Subcontractors 24
35. Evaluation of Tenders 24
36. Comparison of Tenders 24
37. Abnormally Low Tenders and Abnormally High Tenders Abnormally Low Tenders 25
38. Unbalanced and/or Front-Loaded Tenders 25
39. Qualifications of the Tenderer 26
40. Lowest Evaluated Tender 26
41. Procuring Entity's Right to Accept Any Tender, and to Reject Any or All Tenders 26

F. AWARD OF CONTRACT *26*

42. Award Criteria 26
43. Notice of Intention to enter into a Contract 26
44. Stand still Period 26
45. Debriefing by the Procuring Entity 27
46. Letter of Award 27
47. Signing of Contract 27
48. Performance Security 27
49. Publication of Procurement Contract 27
50. Procurement Related Complaint and Administrative Review 28

SECTION II – TENDER DATA SHEET (TDS) 29

SECTION III~ EVALUATION AND QUALIFICATION CRITERIA 33

1. General Provisions *33*
2. Preliminary Examination for Determination of Responsiveness *33*
3. Tender Evaluation (ITT 35) *38*
4. Multiple Contracts -NOT APPLICABLE *38*
5. Alternative Tenders (ITT 13.1) – NOT APPLICABLE *38*
6. Margin of Preference *38*
7. Post qualification and Contract award (ITT 39), more specifically, ... *39*
8. POST QUALIFICATION EVALUATION CRITERIA *41*
8A. TECHNICAL EVALUATION CRITERIA ..... **Error! Bookmark not defined.**
8B. FINANCIAL EVALUATION CRITERIA ..... **Error! Bookmark not defined.**
SECTION IV - TENDERING FORMS 52
SECTION IV-A: QUALIFICATION FORMS *53*
1. FORM 1. FOREIGN TENDERERS 40% RULE 53
2. TENDERERS QUALIFICATION WITHOUT PRE-QUALIFICATION 54
2.1 FORM ELI-1.1 TENDERER INFORMATION FORM 54
2.2 FORM ELI-1.2 : TENDERER'S JV INFORMATION FORM 55
2.3 FORM CON – 2: HISTORICAL CONTRACT NON-PERFORMANCE, PENDING LITIGATION AND LITIGATION HISTORY 56
2.4 FORM FIN –3.1: FINANCIAL SITUATION AND PERFORMANCE 60
2.4.1 Financial Data 60
2.4.2 Sources of Finance 61
2.4.3 Financial documents 61
2.5 FORM FIN – 3.2: AVERAGE ANNUAL CONSTRUCTION TURNOVER 62
2.6 FORM FIN –3.3: FINANCIAL RESOURCES 63
2.7 FORM FIN–3.4: CURRENT CONTRACT COMMITMENTS / WORKS IN PROGRESS 64
2.8 FORM EXP -4.1: GENERAL CONSTRUCTION EXPERIENCE 65
2.9 FORM EXP -4.2(A): SPECIFIC CONSTRUCTION AND CONTRACT MANAGEMENT EXPERIENCE 66
2.10 FORM EXP -4.2(B): CONSTRUCTION EXPERIENCE IN KEY ACTIVITIES 67
SECTION IV-B: OTHER FORMS *68*
1 FORM OF TENDER 68
1.1. TENDERER'S ELIGIBILITY-CONFIDENTIAL BUSINESS QUESTIONNAIRE 71
1.2. CERTIFICATE OF INDEPENDENT TENDER DETERMINATION 74
1.3. SELF-DECLARATION FORMS 75
1.3.1 FORM SD1: SELF DECLARATION THAT THE PERSON/TENDERER IS NOT DEBARRED IN THE MATTER OF THE PUBLIC PROCUREMENT AND ASSET DISPOSAL ACT 2015. 75
1.3.2 FORM SD2: SELF DECLARATION THAT THE TENDERER WILL NOT ENGAGE IN ANY CORRUPT OR FRAUDULENT PRACTICE 76
1.3.3 FORM SD3: DECLARATION AND COMMITMENT TO THE CODE OF ETHICS 77
1.4. APPENDIX 1-FRAUD AND CORRUPTION 78
1.5. APPENDIX TO TENDER 81
2 FORM OF TENDER SECURITY - DEMAND BANK GUARANTEE 82
3 FORM OF TENDER SECURITY (TENDER BOND) 83
4 FORM OF TENDER-SECURING DECLARATION 84
5 FORM OF WRITTEN POWER OF ATTORNEY 85
6 CERTIFICATE OF BIDDER'S VISIT TO SITE 86
SECTION IV-C: TECHNICAL PROPOSAL *87*
Schedule A: Site Organization 87
Schedule B: Proposed Work Methodology 88
Schedule C: Contractor's Key Personnel Schedule 90
Form PER-1: Contractor's Representative and Key Personnel 91
Form PER-2: Resume and Declaration – Key Personnel 91
Schedule D: Initial Proposed Programme of Works 100
Schedule E: Contractor's Equipment Form EQU 101
Schedule F: Derivation of Rates 104
Schedule G: Materials Basic Rates & Weightings for Price Adjustments 105
Part I: Schedule of Materials Basic Prices 106
Part II: Approximate Weightings for Price Adjustment 107
PART 2 - WORKS' REQUIREMENTS **108**
SECTION V - BILLS OF QUANTITIES 109
SECTION VI - SPECIFICATIONS 120
SECTION VI –A: STANDARD SPECIFICATIONS *120*
SECTION VI –B: SPECIAL SPECIFICATIONS *121*
100 GENERAL 126
200 MATERIALS AND TESTING OF MATERIALS 145
300 SETTING OUT AND TOLERANCES 146
400 SITE CLEARANCE AND TOP SOIL STRIPPING 147
500 EARTHWORKS 148
600 QUARRIES, BORROW PITS, STOCKPILE AND SPOIL AREAS 152

700 EXCAVATION AND FILLING FOR STRUCTURES 153
800 CULVERT AND DRAINAGE WORKS 155
900 PASSAGE OF TRAFFIC 164
1100 SHOULDERS AND FOOTPATHS 166
1200 NATURAL MATERIAL SUBBASE AND BASE 167
1300 GRADED CRUSHED STONE SUBBBASE 169
1400 CEMENT TREATED MATERIALS 170
1500 BITUMINOUS SURFACE TREATMENTS AND SURFACE DRESSING 171
1600 BITUMINOUS MIX BASES, BINDER COURSES AND WEARING COURSES 173
1700 CONCRETE WORKS 181
1900 STRUCTURAL STEELWORK 199
2000 ROAD FURNITURE 200
2100 MISCALLANEOUS BRIDGE WORKS 211
2200 DAY WORKS 212
2300 PAVING BLOCKS 213
2500 ENVIRONMENTAL MITIGATION MEASURES & HIV AIDS CAMPAIGN 213
SECTION VII - DRAWINGS 229
SUPPLEMENTARY INFORMATION *240*

PART 3 – CONDITIONS OF CONTRACT AND CONTRACT FORMS 241

SECTION VII - GENERAL CONDITIONS OF CONTRACT 242

1. General Provisions 242
1.1 Definitions 242
1.1.1. The Contract 242
1.1.2. Parties and Persons 242
1.1.3. Dates, Tests, Periods and Completion 243
1.1.4. Money and Payments 243
1.1.5. Works and Goods 244
1.1.6. Other Definitions 244
1.2 Interpretation 245
1.3 Communications 245
1.4 Law and Language 245
1.5 Priority of Documents 245
1.6 Contract Agreement 246
1.7 Assignment 246
1.8 Care and Supply of Documents 246
1.9 Delayed Drawings or Instructions 246
1.10 Procuring Entity's Use of Contractor's Documents 247
1.11 Contractor's Use of Procuring Entity's Documents 247
1.12 Confidential Details 247
1.13 Compliance with Laws 247
1.14 Joint and Several Liability 247
1.15 Inspections and Audit by the Procuring Entity 248
2. THE PROCURING ENTITY 248
2.1 Right of Access to the Site 248
2.2 Permits, Licenses or Approvals 248
2.3 Procuring Entity's Personnel 248
2.4 Procuring Entity's Financial Arrangement 249
2.5 Procuring Entity's Claims 249
3. THE ENGINEER 249
3.1 Engineer's Duties and Authority 249
3.2 Delegation by the Engineer 250
3.3 Instructions of the Engineer 250
3.4 Replacement of the Engineer 250
3.5 Determinations 251
4. THE CONTRACTOR 251
4.1 Contractor's General Obligations 251
4.2 Performance Security 251
4.3 Contractor's Representative 252
4.4 Subcontractors 253
4.5 Assignment of Benefit of Subcontract 253
4.6 Co-operation 253
4.7 Setting Out 253
4.8 Safety Procedures 254
4.9 Quality Assurance 254
4.10 Site Data 254
4.11 Sufficiency of the Accepted Contract Amount 254
4.12 Unforeseeable Physical Conditions 255

4.13 Rights of Way and Facilities ... 255
4.14 Avoidance of Interference ... 255
4.15 Access Route ... 255
4.16 Transport of Goods ... 256
4.17 Contractor's Equipment ... 256
4.18 Protection of the Environment ... 256
4.19 Electricity, Water and Gas ... 256
4.20 Procuring Entity's Equipment and Free-Issue Materials ... 256
4.21 Progress Reports ... 257
4.22 Security of the Site ... 257
4.23 Contractor's Operations on Site ... 258
4.24 Fossils ... 258
5. NOMINATED SUB CONTRACTORS ... 258
5.1 Definition of "nominated Subcontractor ... 258
5.2 Objection to Nomination ... 258
5.3 Payments to nominated Subcontractors ... 259
5.4 Evidence of Payments ... 259
6. STAFF AND LABOR ... 259
6.1 Engagement of Staff and Labor ... 259
6.2 Rates of Wages and Conditions of Labor ... 259
6.3 Persons in the Service of Procuring Entity ... 259
6.4 Labor Laws ... 259
6.5 Working Hours ... 260
6.6 Facilities for Staff and Labor ... 260
6.7 Health and Safety ... 260
6.8 Contractor's Superintendence ... 260
6.9 Contractor's Personnel ... 260
6.10 Records of Contractor's Personnel and Equipment ... 261
6.11 Disorderly Conduct ... 261
6.12 Foreign Personnel ... 261
6.13 Supply of Foodstuffs ... 261
6.14 Supply of Water ... 261
6.15 Measures against Insect and Pest Nuisance ... 261
6.16 Alcoholic Liquor or Drugs ... 261
6.17 Arms and Ammunition ... 261
6.18 Festivals and Religious Customs ... 261
6.19 Funeral Arrangements ... 261
6.20 Prohibition of Forced or Compulsory Labor ... 262
6.21 Prohibition of Harmful Child Labor ... 262
6.22 Employment Records of Workers ... 262
6.23 Workers' Organizations ... 262
6.24 Non-Discrimination and Equal Opportunity ... 262
7. PLANT, MATERIALS AND WORKMANSHIP ... 262
7.1 Manner of Execution ... 262
7.2 Samples ... 262
7.3 Inspection ... 262
7.4 Testing ... 263
7.5 Rejection ... 263
7.6 Remedial Work ... 263
7.7 Ownership of Plant and Materials ... 264
7.8 Royalties ... 264
8. COMMENCEMENT, DELAYS AND SUSPENSION ... 264
8.1 Commencement of Works ... 264
8.2 Time for Completion ... 264
8.3 Programme ... 264
8.4 Extension of Time for Completion ... 265
8.5 Delays Caused by Authorities ... 265
8.6 Rate of Progress ... 265
8.7 Delay Damages ... 266
8.8 Suspension of Work ... 266
8.9 Consequences of Suspension ... 266
8.10 Payment for Plant and Materials in Event of Suspension ... 266
8.11 Prolonged Suspension ... 266
8.12 Resumption of Work ... 267
9. TESTS ON COMPLETION ... 267
9.1 Contractor's Obligations ... 267
9.2 Delayed Tests ... 267
9.3 Retesting ... 267
9.4 Failure to Pass Tests on Completion ... 267

10. PROCURING ENTITY'S TAKING OVER *268*
10.1 Taking Over of the Works and Sections 268
10.2 Taking Over of Parts of the Works 268
10.3 Interference with Tests on Completion 269
10.4 Surfaces Requiring Reinstatement 269
11. DEFECTS LIABILITY *269*
11.1 Completion of Outstanding Work and Remedying Defects 269
11.2 Cost of Remedying Defects 269
11.3 Extension of Defects Notification Period 269
11.4 Failure to Remedy Defects 270
11.5 Removal of Defective Work 270
11.6 Further Tests 270
11.7 Right of Access 270
11.8 Contractor to Search 270
11.9 Completion Certificate 270
11.10 Unfulfilled Obligations 271
11.11 Clearance of Site 271
12. MEASUREMENT AND EVALUATION *271*
12.1 Works to be Measured 271
12.2 Method of Measurement 271
13. VARIATIONS AND ADJUSTMENTS *273*
14. CONTRACT PRICE AND PAYMENT *276*
14.1 The Contract Price 276
14.2 Advance Payment 277
14.3 Application for Interim Payment Certificates 277
14.4 Schedule of Payments 278
14.6 Issue of Interim Payment Certificates 279
14.7 Payment 279
14.8 Delayed Payment 279
14.9 Payment of Retention Money 280
14.10 Statement at Completion 280
14.11 Application for Final Payment Certificate 280
14.12 Discharge 281
14.13 Issue of Final Payment Certificate 281
14.14 Cessation of Procuring Entity's Liability 281
14.15 Currencies of Payment 281
15. TERMINATION BY PROCURING ENTITY *282*
15.1 Notice to Correct 282
15.2 Termination by Procuring Entity 282
15.3 Valuation at Date of Termination 283
15.4 Payment after Termination 283
15.5 Procuring Entity's Entitlement to Termination for Convenience 283
15.6 Fraud and Corruption 283
16. SUSPENSION AND TERMINATION BY CONTRACTOR *283*
16.1 Contractor's Entitlement to Suspend Work 283
16.2 Termination by Contractor 284
16.3 Cessation of Work and Removal of Contractor's Equipment 284
16.4 Payment on Termination 285
17. RISK AND RESPONSIBILITY *285*
17.1 Indemnities 285
17.2 Contractor's Care of the Works 285
17.3 Procuring Entity's Risks 286
17.4 Consequences of Procuring Entity's Risks 286
17.5 Intellectual and Industrial Property Rights 286
17.6 Limitation of Liability 287
17.7 Use of Procuring Entity's Accommodation/Facilities 287
18. INSURANCE *287*
18.1 General Requirements for Insurances 287
18.2 Insurance for Works and Contractor's Equipment 288
18.3 Insurance against Injury to Persons and Damage to Property 289
18.4 Insurance for Contractor's Personnel 289
19. FORCE MAJEURE *289*
19.1 Definition of Force Majeure 289
19.2 Notice of Force Majeure 290
19.3 Duty to Minimize Delay 290
19.4 Consequences of Force Majeure 290
19.5 Force Majeure Affecting Subcontractor 290
19.6 Optional Termination, Payment and Release 290
19.7 Release from Performance 291

20. CLAIMS, DISPUTES AND ARBITRATION *291*
20.1 Contractor's Claims 291
20.2 Amicable Settlement 292
20.3 Matters that may be referred to arbitration 292
20.4 Arbitration 292
20.5 Arbitration with National Contractors 293
20.6 Arbitration with Foreign Contractors 293
20.7 Alternative Arbitration Proceedings 293
20.8 Failure to Comply with Arbitrator's Decision 294
20.9 Contract operations continue 294
SECTION VIII - SPECIAL CONDITIONS OF CONTRACT/APPENDIX TO FORM OF TENDER 295
CONDITIONS OF PARTICULAR APPLICATION (CONDITIONS OF CONTRACT) *296*
APPENDIX TO CONDITIONS OF CONTRACT 317
(Appendix to Form of Bid) 317
SECTION IX - CONTRACT FORMS 320
FORM NO. 1 - NOTIFICATION OF INTENTION TO AWARD *321*
FORM NO. 2 - NOTIFICATION OF AWARD *324*
FORM NO. 3 – CONTRACT AGREEMENT *325*
FORM NO. 4 - PERFORMANCE SECURITY *326*
FORM No. 5 - PERFORMANCE SECURITY OPTION 2– (Performance Bond) *327*
FORM NO. 6 - ADVANCE PAYMENT SECURITY *329*
FORM NO. 7 - RETENTION MONEY SECURITY *331*
FORM NO. 8 – CONTRACTOR PERFORMANCE EVALUATION *333*

1.

TENDER DOCUMENT FOR PROCUREMENT OF MALAVA TOWN ROADS PHASE 1

TENDER No.: KURA/RMLF/HQ/308/2026-2027

(1) NAME AND CONTACT ADDRESSES OF PROCURING ENTITY

Name: KENYA URBAN ROADS AUTHORITY (KURA)
Address: P.O. BOX 41727– 00100, Nairobi
Physical Address: Barabara Plaza off Airport South Road Mazao Road Nairobi,
Tel: +254717105233
Email address: info@kura.go.ke

(2) Invitation to Tender (ITT) No.: KURA/RMLF/HQ/308/2026-2027

(3) Tender Name: BUTERE TOWN ROADS PHASE 1

INVITATION TO TENDER

PROCURING ENTITY: KENYA URBAN ROADS AUTHORITY (KURA)

CONTRACT NAME AND DESCRIPTION: BUTERE TOWN ROADS PHASE 1

1. Kenya Urban Roads Authority invites sealed tenders for BUTERE TOWN ROADS PHASE 1 located in Butere Town within Kakamega County. The Time for Completion for the proposed works will be 12 months with Defects Notification Period of 3 months.

2. Tendering will be conducted under national Open competitive method using a standardized tender document. **Tendering is open to all qualified and interested Tenderers in the category specified in the tender Notice.**

3. Qualified and interested tenderers may obtain further information and inspect the Tender Documents from 0900-1500hours at the address given below.

4. A complete set of tender documents may be purchased or obtained by interested tenderers upon payment of a non- refundable fees of Kshs. 1,000 (Kenya Shillings One Thousand Only) in cash or Banker's Cheque and payable to the address given below. Tender documents may be obtained electronically from the website(s) www.kura.go.ke or www.tenders.go.ke. Tender documents obtained electronically will be free of charge. Tenderers downloading documents from a designated Website shall advise the Procurement Entity that they have downloaded the tender documents, giving full contact addresses of the tenderer (*email, telephone number and postal address*).

5. Tender documents may be viewed and downloaded for free from the website www.kura.go.ke or www.tenders.go.ke. Tenderers who download the tender document MUST forward their particulars immediately to supplychain@kura.go.ke, +254717105233 AND/OR P.O. BOX 41727-00100, NAIROBI to facilitate any further clarification or addendum.

6. Tenders shall be quoted be in Kenya Shillings and shall include all taxes. Tenders shall remain valid for **210 days** from the date of opening of tenders. All Tenders must be accompanied by a BID SECURITY IN THE FORM OF UNCONDITIONAL BANK GUARANTEE ISSUED BY BANKS REGULATED BY THE CENTRAL BANK OF KENYA (Amount Specified in the **TDS**) or Tender Securing Declaration form dully filled as necessary.

7. The Tenderer **SHALL** chronologically and sequentially serialize all pages of the tender documents submitted in the numerical format i.e. 1,2,3,4….. including the cover page and all other pages and attachments.

8. Completed tenders must be delivered to the submission address below on or before **(*As per the tender notice*).** Electronic Tenders *will not* be permitted.

9. Tenders will be closed on ***(As per the tender notice*).** Tenders will be opened immediately thereafter in the boardroom in the presence of the Tenderers' designated representatives who choose to attend at the address below.

10. Late tenders will be rejected.

11. The addresses referred to above are:

A. Address for obtaining further information and for purchasing tender documents

KENYA URBAN ROADS AUTHORITY
SUPPLY CHAIN MANAGEMENT OFFICE
BARABARA PLAZA OFF AIRPORT SOUTH ROAD MAZAO ROAD, GROUND FLOOR.
BLOCK D
P.O. BOX 41727-00100, NAIROBI

DEPUTY DIRECTOR (SUPPLY CHAIN MANAGEMENT),
+254717105233, supplychain@kura.go.ke

B. Address for Submission of Tenders.

KENYA URBAN ROADS AUTHORITY

Postal Address

KENYA URBAN ROADS AUTHORITY
WESTERN REGION OFFICE,
PROVISIONAL ROADS OFFICE, MoW ROAD,
P.O. BOX 2665-50100,
KAKAMEGA.
Tel: 020-262-5380
Email: western@kura.go.ke

Physical address for hand Courier Delivery to an office or Tender Box:
KURA Western Region,
Located at Provincial Roads Office, MoW Road,
Kakamega

C. Address for Opening of Tenders.

KENYA URBAN ROADS AUTHORITY

Physical address for the location
KURA Western Region,
Located at Provincial Roads Office, MoW Road,
Kakamega

Name: ENG. SILAS M. KINOTI

Designation: DIRECTOR GENERAL

DIRECTOR GENERAL
KENYA URBAN ROADS
AUTHORITY (KURA)
P. O. Box 41727 - 00100
NAIROBI

Signature _____

Date: 26th November 2026

PART 1 ~ TENDERING PROCEDURES

SECTION I-INSTRUCTIONS TO TENDERERS

A GENERAL PROVISIONS

1. Scope of Tender

1.1 The Procuring Entity as defined in the Appendix to Conditions of Contract invites tenders for Works Contract as described in the tender documents. The name, identification, and number of lots (contracts) of this Tender Document are **specified in the TDS.**

2. Fraud and Corruption

2.1 The Procuring Entity requires compliance with the provisions of the Public Procurement and Asset Disposal Act, 2015, Section 62 "Declaration not to engage in corruption". The tender submitted by a person shall include a declaration that the person shall not engage in any corrupt or fraudulent practice and a declaration that the person or his or her sub-contractors are not debarred from participating in public procurement proceedings.

2.2 The Procuring Entity requires compliance with the provisions of the Competition Act 2010, regarding collusive practices in contracting. Any tenderer found to have engaged in collusive conduct shall be disqualified and criminal and/or civil sanctions may be imposed. To this effect, Tenders shall be required to complete and sign the "Certificate of Independent Tender Determination" annexed to the Form of Tender.

2.3 Tenderers shall permit and shall cause their agents (where declared or not), subcontractors, sub-consultants, service providers, suppliers, and their personnel, to permit the Procuring Entity to inspect all accounts, records and other documents relating to any initial selection process, pre-qualification process, tender submission, proposal submission, and contract performance (in the case of award), and to have them audited by auditors appointed by the Procuring Entity.

2.4 Unfair Competitive Advantage -Fairness and transparency in the tender process require that the firms or their Affiliates competing for a specific assignment do not derive a competitive advantage from having provided consulting services related to this tender. To that end, the Procuring Entity shall indicate in the **Data Sheet** and make available to all the firms together with this tender document all information that would in that respect give such firm any unfair competitive advantage over competing firms.

3. Eligible Tenderers

3.1 A Tenderer may be a firm that is a private entity, a state-owned enterprise or institution subject to ITT 3.8, or an individual or any combination of such entities in the form of a joint venture (JV) under an existing agreement or with the intent to enter into such an agreement supported by a letter of intent. In the case of a joint venture, all members shall be jointly and severally liable for the execution of the entire Contract in accordance with the Contract terms. The JV shall nominate a Representative who shall have the authority to conduct all business for and on behalf of any and all the members of the JV during the tendering process and, in the event the JV is awarded the Contract, during contract execution. Members of a joint venture may not also make an individual tender, be a subcontractor in a separate tender or be part of another joint venture for the purposes of the same Tender. The maximum number of JV members shall be specified in the **TDS.**

3.2 Public Officers of the Procuring Entity, their Spouses, Child, Parent, Brothers or Sister. Child, Parent, Brother or Sister of a Spouse, their business associates or agents and firms/organizations in which they have a substantial or controlling interest shall not be eligible to tender or be awarded a contract. Public Officers are also not allowed to participate in any procurement proceedings.

3.3 A Tenderer shall not have a conflict of interest. Any tenderer found to have a conflict of interest shall be disqualified. A tenderer may be considered to have a conflict of interest for the purpose of this tendering process, if the tenderer:

a) Directly or indirectly controls, is controlled by or is under common control with another tenderer; or

b) Receives or has received any direct or indirect subsidy from another tenderer; or
c) Has the same legal representative as another tenderer; or
d) Has a relationship with another tenderer, directly or through common third parties, that puts it in a position to influence the tender of another tenderer, or influence the decisions of the Procuring Entity regarding this tendering process; or
e) Any of its affiliates participated as a consultant in the preparation of the design or technical specifications of the goods or works that are the subject of the tender; or
f) any of its affiliates has been hired (or is proposed to be hired) by the Procuring Entity as a consultant for Contract implementation; or
g) Would be providing goods, works, or non-consulting services resulting from or directly related to consulting services for the preparation or implementation of the contract specified in this Tender Document; or
h) Has a close business or personal relationship with senior management or professional staff of the Procuring Entity who has the ability to influence the bidding process and:
   i) are directly or indirectly involved in the preparation of the Tender document or specifications of the Contract, and/or the Tender evaluation process of such contract; or
   ii) may be involved in the implementation or supervision of such Contract unless the conflict stemming from such relationship has been resolved in a manner acceptable to the Procuring Entity throughout the tendering process and execution of the Contract.

3.4 A tenderer shall not be involved incorrupt, coercive, obstructive or fraudulent practice. A tenderer that is proven to have been involved in any of these practices shall be automatically disqualified.

3.5 A Tenderer (either individually or as a JV member) shall not participate in more than one Tender, except for permitted alternative tenders. This includes participation as a subcontractor in other Tenders. Such participation shall result in the disqualification of all Tenders in which the firm is involved. Members of a joint venture may not also make an individual tender, be a subcontractor in a separate tender or be part of another joint venture for the purposes of the same Tender. A firm that is not a tenderer or a JV member may participate as a subcontractor in more than one tender.

3.6 A Tenderer may have the nationality of any country, subject to the restrictions pursuant to ITT3.9. A Tenderer shall be deemed to have the nationality of a country if the Tenderer is constituted, incorporated or registered in and operates inconformity with the provisions of the laws of that country, as evidenced by its articles of incorporation (or equivalent documents of constitution or association) and its registration documents, as the case may be. This criterion also shall apply to the determination of the nationality of proposed subcontractors or sub-consultants for any part of the Contract including related Services.

3.7 A Tenderer that has been debarred from participating in public procurement shall be ineligible to tender or be awarded a contract. The list of debarred firms and individuals is available from the website of PPRA www.ppra.go.ke.

3.8 A Tenderer that is a state-owned enterprise or a public institution in Kenya may be eligible to tender and be awarded a Contract(s) only if it is determined by the Procuring Entity to meet the following conditions, i.e. if it is:
   i) A legal public entity of Government and/or public administration,
   ii) financially autonomous and not receiving any significant subsidies or budget support from any public entity or Government, and
   iii) operating under commercial law and vested with legal rights and liabilities similar to any commercial enterprise to enable it compete with firms in the private sector on an equal basis.

3.9 Firms and individuals shall be ineligible if their countries of origin are:
   a) as a matter of law or official regulations, Kenya prohibits commercial relations with that country, or
   b) by an act of compliance with a decision of the United Nations Security Council taken under Chapter VII of the Charter of the United Nations, Kenya prohibits any import of goods or contracting of works or services from that country, or any payments to any country, person, or entity in that country.

A tenderer shall provide such documentary evidence of eligibility satisfactory to the Procuring Entity, as the Procuring Entity shall reasonably request.

3.10 Foreign tenderers are required to source at least forty (40%) percent of their contract inputs (in supplies, local subcontracts and labor) from citizen suppliers and contractors. To this end, a foreign tenderer shall provide its tender documentary evidence that this requirement is met. Foreign tenderers not meeting this criterion will be automatically disqualified. Information required to enable the Procuring Entity determine if this condition is met shall be provided for this purpose in *"SECTION III-EVALUATION AND QUALIFICATION CRITERIA, Item 9".*

3.11 Pursuant to the eligibility requirements of ITT4.10, a tender is considered a foreign tenderer, if the tenderer is not registered in Kenya or if the tenderer is registered in Kenya and has less than 51 percent ownership by Kenyan citizens. JVs are considered as foreign tenderers if the individual member firms are not registered in Kenya or if are registered in Kenya and have less than 51 percent ownership by Kenyan citizens. The JV shall not subcontract to foreign firms more than 10 percent of the contract price, excluding provisional sums.

3.12 The National Construction Authority Act of Kenya requires that all local and foreign contractors be registered with the National Construction Authority and be issued with a Registration Certificate before they can undertake any construction works in Kenya. Registration shall not be a condition for tender, but it shall be a condition of contract award and signature. A selected tenderer shall be given opportunity to register before such award and signature of contract. Application for registration with National Construction Authority may be accessed from the website www.nca.go.ke.

3.13 The Competition Act of Kenya requires that firms wishing to tender as Joint Venture undertakings which may prevent, distort or lessen competition in provision of services are prohibited unless they are exempt in accordance with the provisions of Section 25 of the Competition Act, 2010. JVs will be required to seek for exemption from the Competition Authority. Exemption shall not be a condition for tender, but it shall be a condition of contract award and signature. A JV tenderer shall be given opportunity to seek such exemption as a condition of award and signature of contract. Application for exemption from the Competition Authority of Kenya may be accessed from the website www.cak.go.ke.

3.14 A Kenyan tenderer shall be eligible to tender if it provides evidence of having fulfilled his/her tax obligations by producing a valid tax compliance or valid tax certificate issued by the Kenya Revenue Authority.

4. Eligible Goods, Equipment, and Services

4.1 Goods, equipment and services to be supplied under the Contract may have their origin in any country that is not ineligible under ITT3.9. At the Procuring Entity's request, Tenderers may be required to provide evidence of the origin of Goods, equipment and services.

4.2 Any goods, works and production processes with characteristics that have been declared by the relevant national environmental protection agency or by other competent authority as harmful to human beings and to the environment shall not be eligible for procurement.

5. Tenderer's Responsibilities

5.1 The tenderer shall bear all costs associated with the preparation and submission of his/her tender, and the Procuring Entity will in no case be responsible or liable for those costs.

5.2 The tenderer, at the tenderer's own responsibility and risk, is encouraged to visit and examine and inspect the Site of the Works and its surroundings and obtain all information that may be necessary for preparing the tender and entering into a contract for construction of the Works. The costs of visiting the Site shall be at the tenderer's own expense.

5.3 The Tenderer and any of its personnel or agents will be granted permission by the Procuring Entity to enter up on its premises and lands for the purpose of such visit. The Tenderer shall indemnify the Procuring Entity against all liability arising from death or personal injury, loss of or damage to property, and any other losses and expenses incurred as a result of the examination and inspection.

5.4 The tenderer shall provide in the Form of Tender and Qualification Information, a preliminary description of the proposed work method and schedule, including charts, as necessary or required.

B. CONTENTS OF TENDER DOCUMENTS

6. Sections of Tender Document

6.1 The tender document consists of Parts 1, 2, and 3, which includes all the sections specified below, and which should be read in conjunction with any Addenda issued in accordance with ITT10.

PART 1: Tendering Procedures

Section I: Instructions to Tenderers

Section II: Tender Data Sheet (TDS)

Section III: Evaluation and Qualification Criteria

Section IV: Tendering Forms

PART 2: Works' Requirements Section V: Bills of Quantities Section VI: Specifications Section VII: Drawings

PART3: Conditions of Contract and Contract Forms

Section VIII: General Conditions (GCC)
Section IX: Particular Conditions of Contract
Section X: Contract Forms

6.2 The Invitation to an issued by the Procuring Entity is not part of the Contract documents.

6.3 Unless obtained directly from the Procuring Entity, the Procuring Entity is not responsible for the completeness of the Tender document, responses to requests for clarification, the minutes of a pre-arranged site visit and those of the pre-Tender meeting (if any), or Addenda to the Tender document in accordance with ITT 10. In case of any contradiction, documents obtained directly from the Procuring Entity shall prevail.

6.4 The Tenderer is expected to examine all instructions, forms, terms, and specifications in the Tender Document and to furnish with its Tender all information and documentation as is required by the Tender document.

7. Clarification of Tender Document, Site Visit, Pre-Tender Meeting

7.1 A tenderer requiring any clarification of the tender document shall contact the Procuring Entity in writing at the Procuring Entity's address **specified in the TDS** or raise its enquiries during the pre-Tender meeting if provided for in accordance with ITT 7.2. The Procuring Entity will respond in writing to any request for clarification, provided that such request is received no later than the period specified in the **TDS p**rior to the deadline for submission of tenders. The Procuring Entity shall forward copies of its response to all tenderers who have acquired the Tender D documents in accordance with ITT 7.4, including a description of the inquiry but without identifying its source. If so specified **in the TDS**, the Procuring Entity shall also promptly publish its response at the web page identified in the **TDS**. Should the clarification result in changes to the essential elements of the Tender Documents, the Procuring Entity shall amend the Tender Documents following the procedure under ITT 8 and ITT 22.2.

7.2 The Tenderer, at the Tenderer's own responsibility and risk, is encouraged to visit and examine and inspect the site(s) of the required contracts and obtain all information that may be necessary

for preparing a tender. The costs of visiting the Site shall be at the Tenderer's own expense. The Procuring Entity shall specify in the **TDS** if a pre- arranged Site visit and or a pre-tender meeting will be held, when and where. The Tenderer's designated representative is invited to attend a pre-arranged site visit and a pre-tender meeting, as the case may be. The purpose of the site visit and the pre-tender meeting will be to clarify issues and to answer questions on any matter that may be raised at that stage.

7.3 The Tenderer is requested to submit any questions in writing, to reach the Procuring Entity not later than the period specified in the **TDS** before the meeting.

7.4 Minutes of a pre-arranged site visit and those of the pre-tender meeting, if applicable, including the text of the questions asked by Tenderers and the responses given, together with any responses prepared after the meeting, will be transmitted promptly to all Tenderers who have acquired the Tender Documents. Minutes shall not identify the source of the questions asked.

7.5 The Procuring Entity shall also promptly publish anonymized (*no names*) Minutes of the pre-arranged site visit and those of the pre-tender meeting at the web page identified **in the TDS**. Any modification to the Tender Documents that may become necessary as a result of the pre-arranged site visit and those of the pre-tender meeting shall be made by the Procuring Entity exclusively through the issue of an Addendum pursuant to ITT 8 and not through the minutes of the pre-Tender meeting. Non-attendance at the pre-arranged site visit and the pre-tender meeting will not be a cause for disqualification of a Tenderer.

8. Amendment of Tender Documents

8.1 At any time prior to the deadline for submission of Tenders, the Procuring Entity may amend the Tender Documents by issuing addenda.

8.2 Any addendum issued shall be part of the Tender Documents and shall be communicated in writing to all who have obtained the Tender Documents from the Procuring Entity. The Procuring Entity shall also promptly publish the addendum on the Procuring Entity's website in accordance with ITT 7.5.

8.3 To give Tenderers reasonable time in which to take an addendum into account in preparing their Tenders, the Procuring Entity should extend the deadline for the submission of Tenders, pursuant to ITT 22.2.

C. PREPARATION OF TENDERS

9. Cost of Tendering

The Tenderer shall meet all costs associated with the preparation and submission of its Tender, and the Procuring Entity shall not be responsible or liable for those costs, regardless of the conduct or outcome of the tendering process.

10. Language of Tender

The Tender, as well as all correspondence and documents relating to the tender exchanged by the tenderer and the Procuring Entity, shall be written in the English Language. Supporting documents and printed literature that are part of the Tender may be in another language provided they are accompanied by an accurate and notarized translation of the relevant passages into the English Language, in which case, for purposes of interpretation of the Tender, such translation shall govern.

11. Documents Comprising the Tender

11.1 The Tender shall comprise the following:

a) Form of Tender prepared in accordance with ITT 12;
b) Schedules including priced Bill of Quantities, completed in accordance with ITT 12 and ITT 14;
c) Tender Security or Tender-Securing Declaration, in accordance with ITT 19.1;

d) Alternative Tender, if permissible, in accordance with ITT 13;
e) Authorization: written confirmation authorizing the signatory of the Tender to commit the Tenderer, in accordance with ITT 20.3;
f) Qualifications: documentary evidence in accordance with ITT 17 establishing the Tenderer's qualifications to perform the Contract if its Tender is accepted;
g) Conformity: a technical proposal in accordance with ITT 16;
h) Any other document required in the TDS.

11.2 In addition to the requirements under ITT 11.1, Tenders submitted by a JV shall include a copy of the Joint Venture Agreement entered into by all members. Alternatively, a letter of intent to execute a Joint Venture Agreement in the event of a successful Tender shall be signed by all members and submitted with the Tender, together with a copy of the proposed JV Agreement. Change of membership and conditions of the JV prior to contract signature will render the tender liable for disqualification.

12. Form of Tender and Schedules

12.1 The Form of Tender and Schedules, including the Bill of Quantities, shall be prepared using the relevant form*s* furnished in Section IV, Tendering Forms. The forms must be completed without any alterations to the text, and no substitutes shall be accepted except as provided under ITT 20.3. All blank spaces shall be filled in with the information requested. The Tenderer shall chronologically serialize all pages of the tender documents submitted.

12.2 The Tenderer shall furnish in the Form of Tender information on commissions and gratuities, if any, paid or to be paid to agents or any other party relating to this Tender.

13. Alternative Tenders

13.1 Unless otherwise specified in the TDS, alternative Tenders shall not be considered.

13.2 When alternative times for completion are explicitly invited, a statement to that effect will be included in the **TDS**, and the method of evaluating different alternative times for completion will be described in Section III, Evaluation and Qualification Criteria.

13.3 Except as provided under ITT13.4 below, Tenderers wishing to offer technical alternatives to the requirements of the Tender Documents must first price the Procuring Entity's design as described in the Tender Documents and shall further provide all information necessary for a complete evaluation of the alternative by the Procuring Entity, including drawings, design calculations, technical specifications, breakdown of prices, and proposed construction methodology and other relevant details. Only the technical alternatives, if any, of the Tenderer with the Winning Tender conforming to the basic technical requirements shall be considered by the Procuring Entity.

13.4 When specified in the **TDS**, Tenderers are permitted to submit alternative technical solutions for specified parts of the Works, and such parts will be identified in the **TDS**, as will the method for their evaluating, and described in Section VII, Works' Requirements.

14. Tender Prices and Discounts

14.1 The prices and discounts (including any price reduction) quoted by the Tenderer in the Form of Tender and in the Bill of Quantities shall conform to the requirements specified below.

14.2 The Tenderer shall fill in rates and prices for all items of the Works described in the Bill of Quantities. Items against which no rate or price is entered by the Tenderer shall be deemed covered by the rates for other items in the Bill of Quantities and will not be paid for separately by the Procuring Entity. An item not listed in the priced Bill of Quantities shall be assumed to be not included in the Tender, and provided that the Tender is determined substantially responsive notwithstanding this omission, the average price of the item quoted by substantially responsive Tenderers will be added to the Tender price and the equivalent total cost of the Tender so determined will be used for price comparison.

14.3 The price to be quoted in the Form of Tender, in accordance with ITT 12, shall be the total price of the Tender, including any discounts offered.

14.4 The Tenderer shall quote any discounts and the methodology for their application in the Form of Tender, in accordance with ITT 12

14.5 It will be specified in the **TDS** if the rates and prices quoted by the Tenderer are or are not subject to adjustment during the performance of the Contract in accordance with the provisions of the Conditions of Contract, except in cases where the contract is subject to fluctuations and adjustments, not fixed price. In such a case, the Tenderer shall furnish the indices and weightings for the price adjustment formulae in the Schedule of Adjustment Data and the Procuring Entity may require the Tenderer to justify its proposed indices and weightings.

14.6 Where tenders are being invited for individual lots (contracts) or for any combination of lots (packages), tenderers wishing to offer discounts for the award of more than one Contract shall specify in their Tender the price reductions applicable to each package, or alternatively, to individual Contracts within the package. Discounts shall be submitted in accordance with ITT 14.4, provided the Tenders for all lots (contracts) are opened at the same time.

14.7 All duties, taxes, and other levies payable by the Contractor under the Contract, or for any other cause, as of the date 30 days prior to the deadline for submission of Tenders, shall be included in the rates and prices and the total Tender Price submitted by the Tenderer.

15. Currencies of Tender and Payment

15.1 The currency (ies) of the Tender and the currency (ies) of payments shall be the same.

15.2 Tenderers shall quote entirely in Kenya Shillings. The unit rates and the prices shall be quoted by the Tenderer in the Bill of Quantities, entirely in Kenya shillings

a) A Tenderer expecting to incur expenditures in other currencies for inputs to the Works supplied from outside Kenya (referred to as "the foreign currency requirements") shall (if so allowed in the **TDS**) indicate in the Appendix to Tender the percentage(s) of the Tender Price (excluding Provisional Sums), needed by the Tenderer for the payment of such foreign currency requirements, limited to no more than two foreign currencies.

b) The rates of exchange to be used by the Tenderer in arriving at the local currency equivalent and the percentage(s) mentioned in (a) above shall be specified by the Tenderer in the Appendix to Tender and shall be based on the exchange rate provided by the Central Bank of Kenya on the date 30 days prior to the actual date of tender opening. Such exchange rate shall apply for all foreign payments under the Contract.

15.3 Tenderers may be required by the Procuring Entity to justify, to the Procuring Entity's satisfaction, their local and foreign currency requirements, and to substantiate that the amounts included in the unit rates and prices and shown in the Schedule of Adjustment Data in the Appendix to Tender are reasonable, in which case a detailed breakdown of the foreign currency requirements shall be provided by Tenderers.

16. Documents Comprising the Technical Proposal

The Tenderer shall furnish a technical proposal including a statement of work methods, equipment, personnel, schedule and any other information as stipulated in Section IV, Tender Forms, insufficient detail to demonstrate the adequacy of the Tenderer's proposal to meet the work's requirements and the completion time.

17. Documents Establishing the Eligibility and Qualifications of the Tenderer

17.1 Tenderers shall complete the Form of Tender, included in Section IV, Tender Forms, to establish Tenderer's eligibility in accordance with ITT 4.

17.2 In accordance with Section III, Evaluation and Qualification Criteria, to establish its qualifications to perform the Contract the Tenderer shall provide the information requested in the corresponding information sheets included in Section IV, Tender Forms.

17.3 If a margin of preference applies as specified in accordance with ITT33. 1, national tenderers,

individually or in joint ventures, applying for eligibility for national preference shall supply all information required to satisfy the criteria for eligibility specified in accordance with ITT 33.1.

17.4 Tenderers shall be asked to provide, as part of the data for qualification, such information, including details of ownership, as shall be required to determine whether, according to the classification established by the Procuring Entity, a particular contract or or group of contractors qualifies for a margin of preference. Further the information will enable the Procuring Entity identify any actual or potential conflict of interest in relation to the procurement and/or contract management processes, or a possibility of collusion between tenderers, and there by help to prevent any corrupt influence in relation to the procurement process or contract management.

17.5 The purpose of the information described **in ITT 17.2** above overrides any claims to confidentiality which a tenderer may have. There can be no circumstances in which it would be justified for a tenderer to keep information relating to its ownership and control confidential where it is tendering to undertake public sector work and receive public sector funds. Thus, confidentiality will not be accepted by the Procuring Entity as a justification for a Tenderer's failure to disclose, or failure to provide required information on its ownership and control.

17.6 The Tenderer shall provide further documentary proof, information or authorizations that the Procuring Entity may request in relation to ownership and control which information on any changes to the information which was provided by the tenderer under ITT 6.4. The obligations to require this information shall continue for the duration of the procurement process and contract performance and after completion of the contract, if any change to the information previously provided may reveal a conflict of interest in relation to the award or management of the contract.

17.7 All information provided by the tenderer pursuant to these requirements must be complete, current and accurate as at the date of provision to the Procuring Entity. In submitting the information required pursuant to these requirements, the Tenderer shall warrant that the information submitted is complete, current and accurate as at the date of submission to the Procuring Entity.

17.8 If a tenderer fails to submit the information required by these requirements, its tenderer will be rejected. Similarly, if the Procuring Entity is unable, after taking reasonable steps, to verify to a reasonable degree the information submitted by a tenderer pursuant to these requirements, then the tender will be rejected.

17.9 If information submitted by a tenderer pursuant to these requirements, or obtained by the Procuring Entity (whether through its own enquiries, through notification by the public or otherwise), shows any conflict of interest which could materially and improperly benefit the tenderer in relation to the procurement or contract management process, then:

i) If the procurement process is still on going, the tenderer will be disqualified from the procurement process,
ii) If the contract has been awarded to that tenderer, the contract award will be set aside,
iii) the tenderer will be referred to the relevant law enforcement authorities for investigation of whether the tenderer or any other persons have committed any criminal offence.

17.10 If a tenderer submits information pursuant to these requirements that is incomplete, inaccurate or out-of-date, or attempts to obstruct the verification process, then the consequences ITT 17.8 will ensue unless the tenderer can show to the reasonable satisfaction of the Procuring Entity that any such act was not material, or was due to genuine error which was not attributable to the intentional act, negligence or recklessness of the tender.

18. Period of Validity of Tenders

18.1. Tenders shall remain valid for the Tender Validity period specified in the **TDS**. The Tender Validity period starts from the date fixed for the Tender submission deadline (as prescribed by the Procuring Entity in accordance with ITT 22). A Tender valid for a shorter period shall be rejected by the Procuring Entity as non-responsive.

18.2 In exceptional circumstances, prior to the expiration of the Tender validity period, the Procuring Entity may request Tenderers to extend the period of validity of their Tenders. The request and the responses shall be made in writing. If a Tender Security is requested in accordance with ITT 19, it shall also be extended for thirty (30) days beyond the deadline of the extended validity period. A Tenderer may refuse the request without forfeiting its Tender security. A Tenderer granting their quest shall not be required or permitted to modify its Tender.

19. Tender Security

19.1 The Tenderer shall furnish as part of its Tender, either a Tender-Securing Declaration or a Tender Security as specified in the **TDS**, in original form and, in the case of a Tender Security, in the amount and currency **specified in the TDS**. A Tender-Securing Declaration shall use the form included in Section IV, Tender Forms.

19.2 If a Tender Security is specified pursuant to ITT19.1, the Tender Security shall be a demand guarantee in any of the following forms at the Tenderer's option:

i) cash;
ii) a bank guarantee;
iii) a guarantee by an insurance company registered and licensed by the Insurance Regulatory Authority listed by the Authority; or
iv) a guarantee issued by a financial institution approved and licensed by the Central Bank of Kenya, from a reputable source, and an eligible country.

19.3 If an unconditional bank guarantee is issued by a bank located outside Kenya, the issuing bank shall have a correspondent bank located in Kenya to make it enforceable. The Tender Security shall be valid for thirty (30) days beyond the original validity period of the Tender, or beyond any period of extension if requested under ITT 18.2.

19.4 If a Tender Security or Tender-Securing Declaration is specified pursuant to ITT 19.1, any Tender not accompanied by a substantially responsive Tender Security or Tender-Securing Declaration shall be rejected by the Procuring Entity as non-responsive.

19.5 If a Tender Security is specified pursuant to ITT 19.1, the Tender Security of unsuccessful Tenderers shall be returned as promptly as possible upon the successful Tenderer's signing the Contract and furnishing the Performance Security and any other documents required in the TDS. The Procuring Entity shall also promptly return the tender security to the tenderers where the procurement proceedings are terminated, all tenders were determined non-responsive or a bidder declines to extend tender validity period.

19.6 The Tender Security of the successful Tenderer shall be returned as promptly as possible once the successful Tenderer has signed the Contract and furnished the required Performance Security, and any other documents required in the TDS.

19.7 The Tender Security may be forfeited or the Tender-Securing Declaration executed:

a) if a Tenderer withdraws its Tender during the period of Tender validity specified by the Tenderer on the Form of Tender, or any extension there to provided by the Tenderer; or
b) if the successful Tenderer fails to:
i) sign the Contract in accordance with ITT 47; or
ii) furnish a Performance Security and if required in the TDS, and any other documents required in the TDS.

19.8 Where tender securing declaration is executed, the Procuring Entity shall recommend to the PPRA that PPRA debars the Tenderer from participating in public procurement as provided in the law.

19.9 The Tender Security or the Tender-Securing Declaration of a JV shall be in the name of the JV that submits the Tender. If the JV has not been legally constituted into a legally enforceable JV at the time of tendering, the Tender Security or the Tender-Securing Declaration shall be in the names of all future members as named in the letter of intent referred to in ITT 4.1 and ITT 11.2.

19.10 A tenderer shall not issue a tender security to guarantee itself.

20. Format and Signing of Tender

20.1 The Tenderer shall prepare one original of the documents comprising the Tender as described in ITT 11 and clearly mark it "ORIGINAL." Alternative Tenders, if permitted in accordance with ITT 13, shall be clearly marked "ALTERNATIVE." In addition, the Tenderer shall submit copies of the Tender, in the number **specified in the TDS** and clearly mark them "COPY." In the event of any discrepancy between the original and the copies, the original shall prevail.

20.2 Tenderers shall mark as "CONFIDENTIAL" all information in their Tenders which is confidential

to their business. This may include proprietary information, trade secrets, or commercial or financially sensitive information.

20.3 The original and all copies of the Tender shall be typed or written in indelible ink and shall be signed by a person duly authorized to sign on behalf of the Tenderer. This authorization shall consist of a written confirmation as specified in the **TDS** and shall be attached to the Tender. The name and position held by each person signing the authorization must be typed or printed below the signature. All pages of the Tender where entries or amendments have been made shall be signed or initialed by the person signing the Tender.

20.4 In case the Tenderer is a JV, the Tender shall be signed by an authorized representative of the JV on behalf of the JV, and so as to be legally binding on all the members as evidenced by a power of attorney signed by their legally authorized representatives.

20.5 Any inter-lineation, erasures, or overwriting shall be valid only if they are signed or initialed by the person signing the Tender.

D. SUBMISSION AND OPENING OF TENDERS

21. Sealing and Marking of Tenders

21.1 The Tenderer shall deliver the Tender in a single sealed envelope, or in a single sealed package, or in a single sealed container bearing the name and Reference number of the Tender, addressed to the Procuring Entity and a warning not to open before the time and date for Tender opening date. Within the single envelope, package or container, the Tenderer shall place the following separate, sealed envelopes:

a) in an envelope or package or container marked "ORIGINAL", all documents comprising the Tender, as describedinITT11; and

b) in an envelope or package or container marked "COPIES" all required copies of the Tender; and

c) if alternative Tenders are permitted in accordance with ITT 13, and if relevant:

i) in an envelope or package or container marked "ORIGINAL - ALTERNATIVE TENDER", the alternative Tender; and

ii) in the envelope or package or container marked "COPIES-ALTERNATIVE TENDER", all required copies of the alternative Tender.

The inner envelopes or packages or containers shall:

a) bear the name and address of the Procuring Entity.

b) Bear the name and address of the Tenderer; and

c) Bear the name and Reference number of the Tender.

21.2 If an envelope or package or container is not sealed and marked as required, the *Procuring Entity* will assume no responsibility for the misplacement or premature opening of the Tender. Tenders that were misplaced or opened prematurely will not be accepted.

22. Deadline for Submission of Tenders

22.1 Tenders must be received by the Procuring Entity at the address specified in the **TDS** and no later than the date and time also specified in the **TDS.** When so specified in the **TDS**, Tenderers shall have the option of submitting their Tenders electronically. Tenderers submitting Tenders electronically shall follow the electronic Tender submission procedures specified in the **TDS**.

22.2 The Procuring Entity may, at its discretion, extend the deadline for the submission of Tenders by amending the Tender Documents in accordance with ITT 8, in which case all rights and obligations of the Procuring Entity and Tenderers previously subject to the deadline shall thereafter be subject to the deadline as extended.

23. Late Tenders

The Procuring Entity shall not consider any Tender that arrives after the deadline for submission of tenders, in accordance with ITT 22. Any Tender received by the Procuring Entity after the deadline for submission of Tenders shall be declared late, rejected, and returned unopened to the

Tenderer.

24. Withdrawal, Substitution, and Modification of Tenders

24.1 A Tenderer may withdraw, substitute, or modify its Tender after it has been submitted by sending a written notice, duly signed by an authorized representative, and shall include a copy of the authorization in accordance with ITT 20.3, (except that withdrawal notices do not require copies). The corresponding substitution or modification of the Tender must accompany the respective written notice. All notices must be:

a) prepared and submitted in accordance with ITT 20 and ITT 21 (except that withdrawals notices do not require copies), and in addition, the respective envelopes shall be clearly marked "WITHDRAWAL," "SUBSTITUTION," "MODIFICATION; "and

b) received by the Procuring Entity prior to the deadline prescribed for submission of Tenders, in accordance with ITT 22.

24.2 Tenders requested to be withdrawn in accordance with ITT 24.1 shall be returned unopened to the Tenderers.

24.3 No Tender may be withdrawn, substituted, or modified in the interval between the deadline for submission of Tenders and the expiration of the period of Tender validity specified by the Tenderer on the Form of Tender or any extension thereof.

25. Tender Opening

25.1 Except in the cases specified in ITT 23 and ITT 24.2, the Procuring Entity shall publicly open and read out all Tenders received by the deadline, at the date, time and place specified **in the TDS**, in the presence of Tenderers' designated representatives and anyone who chooses to attend. Any specific electronic Tender opening procedures required if electronic Tendering is permitted in accordance with ITT 22.1, shall be as specified in the **TDS.**

25.2 First, envelopes marked "WITHDRAWAL" shall be opened and read out, and the envelopes with the corresponding Tender shall not be opened but returned to the Tenderer. No Tender withdrawal shall be permitted unless the corresponding withdrawal notice contains a valid authorization to request the withdrawal and is read out attender opening.

25.3 Next, envelopes marked "SUBSTITUTION" shall be opened and read out and exchanged with the corresponding Tender being substituted, and the substituted Tender shall not be opened, but returned to the Tenderer. No Tender substitution shall be permitted unless the corresponding substitution notice contains a valid authorization to request the substitution and is read out at Tender opening.

25.4 Next, envelopes marked "MODIFICATION" shall be opened and read out with the corresponding Tender. No Tender modification shall be permitted unless the corresponding modification notice contains a valid authorization to request the modification and is read out at Tender opening.

25.5 Next, all remaining envelopes shall be opened on time, reading out: the name of the Tenderer and whether there is a modification; the total Tender Price, per lot (contract) if applicable, including any discounts and alternative Tenders; the presence or absence of a Tender Security or Tender-Securing Declaration, if required; and any other details as the Procuring Entity may consider appropriate.

25.6 Only Tenders, alternative Tenders and discounts that are opened and read out at Tender opening shall be considered further for evaluation. The Form of Tender and pages of the Bill of Quantities (to be decided on by the tender opening committee) are to be initialed by the members of the tender opening committee attending the opening.

25.7 At the Tender Opening, the Procuring Entity shall neither discuss the merits of any Tender nor reject any Tender (except for late Tenders, in accordance with ITT 23.1).

25.8 The Procuring Entity shall prepare minutes of the Tender Opening that shall include, as a minimum:

a) The name of the Tenderer and whether there is a withdrawal, substitution, or modification;

b) The Tender Price, per lot (contract) if applicable, including any discounts;
c) any alternative Tenders;
d) the presence or absence of a Tender Security, if one was required.
e) number of pages of each tender document submitted.

25.9 The Tenderers' representatives who are present shall be requested to sign the minutes. The omission of a Tenderer's signature on the minutes shall not invalidate the contents and effect of the minutes. A copy of tender opening register shall be issued to a tenderer upon request.

E. EVALUATION AND COMPARISON OF TENDERS

26. Confidentiality

26.1 Information relating to the evaluation of Tenders and recommendation of contract award shall not be disclosed to Tenderers or any other persons not officially concerned with the Tender process until information on Intention to Award the Contract is transmitted to all Tenderers in accordance with ITT 43.

26.2 Any effort by a Tenderer to influence the Procuring Entity in the evaluation of the Tenders or Contract award decisions may result in the rejection of its tender.

26.3 Notwithstanding ITT 26.2, from the time of tender opening to the time of contract award, if a tenderer wishes to contact the Procuring Entity on any matter related to the tendering process, it shall do so in writing.

27. Clarification of Tenders

27.1 To assist in the examination, evaluation, and comparison of the tenders, and qualification of the tenderers, the Procuring Entity may, at its discretion, ask any tenderer for a clarification of its tender, given a reasonable time for a response. Any clarification submitted by a tenderer that is not in response to a request by the Procuring Entity shall not be considered. The Procuring Entity's request for clarification and the response shall be in writing. No change, including any voluntary increase or decrease, in the prices or substance of the tender shall be sought, offered, or permitted, except to confirm the correction of arithmetic errors discovered by the Procuring Entity in the evaluation of the tenders, in accordance with ITT 31.

27.2 If a tenderer does not provide clarifications of its tender by the date and time set in the Procuring Entity's request for clarification, its Tender may be rejected.

28. Deviations, Reservations, and Omissions

28.1 During the evaluation of tenders, the following definitions apply:
a) “Deviation” is a departure from the requirements specified in the tender document;
b) “Reservation” is the setting of limiting conditions or withholding from complete acceptance of the requirements specified in the tender document; and
c) “Omission” is the failure to submit part or all of the information or documentation required in the Tender document.

29. Determination of Responsiveness

29.1 The Procuring Entity's determination of a Tender's responsiveness is to be based on the contents of the tender itself, as defined in ITT 11.

29.2 A substantially responsive Tender is one that meets the requirements of the Tender document without material deviation, reservation, or omission. A material deviation, reservation, or omission is one that, if accepted, would:
a) Affect in any substantial way the scope, quality, or performance of the Works specified in the Contract; or

b) limit in any substantial way, inconsistent with the tender document, the Procuring Entity's rights or the tenderer's obligations under the proposed contract; or

c) if rectified, would unfairly affect the competitive position of other tenderers presenting substantially responsive tenders.

29.3 The Procuring Entity shall examine the technical aspects of the tender submitted in accordance with ITT 16, to confirm that all requirements of Section VII, Works' Requirements have been met without any material deviation, reservation or omission.

29.4 If a tender is not substantially responsive to the requirements of the tender document, it shall be rejected by the Procuring Entity and may not subsequently be made responsive by correction of the material deviation, reservation, or omission.

30. Non-material Non-conformities

30.1 Provided that a tender is substantially responsive, the Procuring Entity may waive any non-conformities in the tender.

30.2 Provided that a Tender is substantially responsive, the Procuring Entity may request that the tenderer submit the necessary information or documentation, within a reasonable period of time, to rectify nonmaterial non- conformities in the tender related to documentation requirements. Requesting information or documentation on such non-conformities shall not be related to any aspect of the price of the tender. Failure of the tenderer to comply with the request may result in the rejection of its tender.

30.3 Provided that a tender is substantially responsive, the Procuring Entity shall rectify quantifiable nonmaterial non-conformities related to the Tender Price. To this effect, the Tender Price shall be adjusted, for comparison purposes only, to reflect the price of a missing or non-conforming item or component in the manner specified **in the TDS.**

31. Arithmetical Errors

31.1 The tender sum as submitted and read out during the tender opening shall be absolute and final and shall not be the subject of correction, adjustment or amendment in anyway by any person or entity.

31.2 Provided that the Tender is substantially responsive, the Procuring Entity shall handle errors on the following basis:

a) Any error detected if considered a major deviation that affects the substance of the tender, shall lead to disqualification of the tender as non-responsive.

b) Any errors in the submitted tender arising from a miscalculation of unit price, quantity, subtotal and total bid price shall be considered as a major deviation that affects the substance of the tender and shall lead to disqualification of the tender as non-responsive. and

c) If there is a discrepancy between words and figures, the amount in words shall prevail

31.3 Tenderers shall be notified of any error detected in their bid during the notification of award.

32. Conversion to Single Currency

For evaluation and comparison purposes, the currency (ies) of the Tender shall be converted into a single currency **as specified in the TDS**.

33. Margin of Preference and Reservations

33.1 A margin of preference may be allowed only when the contract is open to international competitive tendering where foreign contractors are expected to participate in the tendering process and where the contract exceeds the value/threshold specified in the Regulations.

33.2 A margin of preference shall not be allowed unless it is specified in the **TDS.**

33.3 Contracts procured on basis of international competitive tendering shall not be subject to reservations exclusive to specific groups as provided in ITT 33.4.

33.4 Where it is intended to reserve a contract to a specific group of businesses (these groups are Small and Medium Enterprises, Women Enterprises, Youth Enterprises and Enterprises of persons living with disability, as the case may be), and who are appropriately registered as such by the authority to be specified in the **TDS**, a procuring entity shall ensure that the invitation to tender specifically indicates that only businesses or firms belonging to the specified group are eligible to tender. No tender shall be reserved to more than one group. If not so stated in the Invitation to Tender and in the Tender documents, the invitation to tender will be open to all interested tenderers.

34. Nominated Subcontractors

34.1 **Unless** otherwise stated **in the TDS,** the Procuring Entity does not intend to execute any specific elements of the Works by subcontractors selected/nominated by the Procuring Entity. In case the Procuring Entity nominates a subcontractor; the subcontract agreement shall be signed by the Subcontractor and the Procuring Entity. The main contract shall specify the working arrangements between the main contractor and the nominated subcontractor.

34.2 Tenderers may propose subcontracting upto the percentage of total value of contracts or the volume of works as specified **in the TDS**. Subcontractors proposed by the Tenderer shall be fully qualified for their parts of the Works.

34.3 Domestic subcontractor's qualifications shall not be used by the Tenderer to qualify for the Works unless their specialized parts of the Works were previously designated so by the Procuring Entity **in the TDS** as can be met by subcontractors referred to hereafter as 'Specialized Subcontractors', in which case, the qualifications of the Specialized Subcontractors proposed by the Tenderer may be added to the qualifications of the Tenderer.

35. Evaluation of Tenders

35.1 The Procuring Entity shall use the criteria and methodologies listed in this ITT and Section III, Evaluation and Qualification Criteria. No other evaluation criteria or methodologies shall be permitted. By applying the criteria and methodologies, the Procuring Entity shall determine the Lowest Evaluated Tender in accordance with ITT 40.

35.2 To evaluate a Tender, the Procuring Entity shall consider the following:

a) Price adjustment in accordance with ITT 31.1(iii); excluding provisional sums and contingencies, if any, but including Day work items, where priced competitively;
b) Price adjustment due to discounts offered in accordance with ITT 14.4;
c) converting the amount resulting from applying (a) and (b) above, if relevant, to a single currency in accordance with ITT 32;
d) price adjustment due to quantifiable nonmaterial non-conformities in accordance with ITT 30.3; and
e) any additional evaluation factors specified **in the TDS** and Section III, Evaluation and Qualification Criteria.

35.3 The estimated effect of the price adjustment provisions of the Conditions of Contract, applied over the period of execution of the Contract, shall not be considered intender evaluation.

35.4 Where the tender involves multiple lots or contracts, the tenderer will be allowed to tender for one or more lots (contracts). Each lot or contract will be evaluated in accordance with ITT 35.2. The methodology to determine the lowest evaluated tenderer or tenderers based one lot (contract) or based on a combination of lots (contracts), will be specified in Section III, Evaluation and Qualification Criteria. In the case of multiple lots or contracts, tenderer will be will be required to prepare the Eligibility and Qualification Criteria Form for each Lot.

36. Comparison of Tenders

The Procuring Entity shall compare the evaluated costs of all substantially responsive Tenders

established in accordance with ITT 35.2 to determine the Tender that has the lowest evaluated cost.

37. Abnormally Low Tenders and Abnormally High Tenders

Abnormally Low Tenders

37.1 An Abnormally Low Tender is one where the Tender price, in combination with other elements of the Tender, appears so low that it raises material concerns as to the capability of the Tenderer in regards to the Tenderer's ability to perform the Contract for the offered Tender Price or that genuine competition between Tenderers is compromised.

37.2 In the event of identification of a potentially Abnormally Low Tender, the Procuring Entity shall seek written clarifications from the Tenderer, including detailed price analyses of its Tender price in relation to the subject matter of the contract, scope, proposed methodology, schedule, allocation of risks and responsibilities and any other requirements of the Tender document.

37.3 After evaluation of the price analyses, in the event that the Procuring Entity determines that the Tenderer has failed to demonstrate its capability to perform the Contract for the offered Tender Price, the Procuring Entity shall reject the Tender.

Abnormally High Tenders

37.4 An abnormally high tender price is one where the tender price, in combination with other constituent elements of the Tender, appears unreasonably too high to the extent that the Procuring Entity is concerned that it (the Procuring Entity) may not be getting value for money or it may be paying too high a price for the contract compared with market prices or that genuine competition between Tenderers is compromised.

37.5 Incase of an abnormally high price, the Procuring Entity shall make a survey of the market prices, check if the estimated cost of the contract is correct and review the Tender Documents to check if the specifications, scope of work and conditions of contract are contributory to the abnormally high tenders. The Procuring Entity may also seek written clarification from the tenderer on the reason for the high tender price. The Procuring Entity shall proceed as follows:

i) If the tender price is abnormally high based on wrong estimated cost of the contract, the Procuring Entity may accept or not accept the tender depending on the Procuring Entity's budget considerations.

ii) If specifications, scope of work and/or conditions of contract are contributory to the abnormally high tender prices, the Procuring Entity shall reject all tenders and may retender for the contract based on revised estimates, specifications, scope of work and conditions of contract, as the case may be.

37.6 If the Procuring Entity determines that the Tender Price is abnormally too high because genuine competition between tenderers is compromised (*often due to collusion, corruption or other manipulations*), the Procuring Entity shall reject all Tenders and shall institute or cause competent Government Agencies to institute an investigation on the cause of the compromise, before retendering.

38. Unbalanced and/or Front-Loaded Tenders

38.1 If in the Procuring Entity's opinion, the Tender that is evaluated as the lowest evaluated price is seriously unbalanced and/or front loaded, the Procuring Entity may require the Tenderer to provide written clarifications. Clarifications may include detailed price analyses to demonstrate the consistency of the tender prices with the scope of works, proposed methodology, schedule and any other requirements of the Tender document.

38.2 After the evaluation of the information and detailed price analyses presented by the Tenderer, the Procuring Entity may as appropriate:

a) accept the Tender; or

b) require that the total amount of the Performance Security be increased at the expense of the Tenderer to a level not exceeding a 10% of the Contract Price; or

c) agree on a payment mode that eliminates the inherent risk of the Procuring Entity paying too much for undelivered works; or
d) reject the Tender,

39. Qualifications of the Tenderer

39.1 The Procuring Entity shall determine to its satisfaction whether the eligible Tenderer that is selected as having submitted the lowest evaluated cost and substantially responsive Tender, meets the qualifying criteria specified in Section III, Evaluation and Qualification Criteria.

39.2 The determination shall be based upon an examination of the documentary evidence of the Tenderer's qualifications submitted by the Tenderer, pursuant to ITT 17. The determination shall not take into consideration the qualifications of other firms such as the Tenderer's subsidiaries, parent entities, affiliates, subcontractors (other than Specialized Subcontractors if permitted in the Tender document), or any other firm(s) different from the Tenderer.

39.3 An affirmative determination shall be a prerequisite for award of the Contract to the Tenderer. A negative determination shall result in disqualification of the Tender, in which event the Procuring Entity shall proceed to the Tenderer who offers a substantially responsive Tender with the next lowest evaluated price to make a similar determination of that Tenderer's qualifications to perform satisfactorily.

40. Lowest Evaluated Tender

Having compared the evaluated prices of Tenders, the Procuring Entity shall determine the Lowest Evaluated Tender. The Lowest Evaluated Tender is the Tender of the Tenderer that meets the Qualification Criteria and whose Tender has been determined to be:
a) Most responsive to the Tender document; and
b) The lowest evaluated price.

41. Procuring Entity's Right to Accept Any Tender, and to Reject Any or All Tenders

The Procuring Entity reserves the right to accept or reject any Tender and to annul the Tender process and reject all Tenders at any time prior to Contract Award, without there by incurring any liability to Tenderers. Incase of annulment, all Tenders submitted and specifically, Tender securities, shall be promptly returned to the Tenderers.

F. AWARD OF CONTRACT

42. Award Criteria

The Procuring Entity shall award the Contract to the successful tenderer whose tender has been determined to be the Lowest Evaluated Tender.

43. Notice of Intention to enter into a Contract

Upon award of the contract and Prior to the expiry of the Tender Validity Period the Procuring Entity shall issue a Notification of Intention to Enter into a Contract/Notification of award to all tenderers which shall contain, at a minimum, the following information:
a) the name and address of the Tenderer submitting the successful tender;
b) the Contract price of the successful tender;
c) a statement of the reason(s) the tender of the unsuccessful tenderer to whom the letter is addressed was unsuccessful, unless the price information in (c) above already reveals the reason;
d) the expiry date of the Standstill Period; and
e) instructions on how to request a debriefing and/or submit a complaint during the stand still period;

44. Stand still Period

44.1 The Contract shall not be signed earlier than the expiry of a Standstill Period of 14 days to allow any dissatisfied tender to launch a complaint. Where only one Tender is submitted, the Standstill Period shall not apply.

44.2 Where a Standstill Period applies, it shall commence when the Procuring Entity has transmitted to each Tenderer the Notification of Intention to Enter into a Contract with the successful Tenderer.

45. Debriefing by the Procuring Entity

45.1 On receipt of the Procuring Entity's Notification of Intention to Enter into a Contract referred to in ITT 43, an unsuccessful tenderer may make a concerns regarding their tender. The Procuring Entity shall provide the debriefing within five days of receipt of the request.

45.2 Debriefings of unsuccessful Tenderers may be done in writing or verbally. The Tenderer shall bear its own costs of attending such a debriefing meeting.

46. Letter of Award

Prior to the expiry of the Tender Validity Period and upon expiry of the Standstill Period specified in ITT 42.1, upon addressing a complaint that has been filed within the Standstill Period, the Procuring Entity shall transmit the Letter of Award to the successful Tenderer. The letter of award shall request the successful tenderer to furnish the Performance Security within 21 days of the date of the letter.

47. Signing of Contract

47.1 Upon the expiry of the fourteen days of the Notification of Intention to enter into contract and upon the parties meeting their respective statutory requirements, the Procuring Entity shall send the successful Tenderer the Contract Agreement.

47.2 Within fourteen (14) days of receipt of the Contract Agreement, the successful Tenderer shall sign, date, and return it to the Procuring Entity.

47.3 The written contract shall be entered into within the period specified in the notification of award and before expiry of the tender validity period.

48. Performance Security

48.1 Within twenty-one (21) days of the receipt of the Letter of Award from the Procuring Entity, the successful Tenderer shall furnish the Performance Security and, any other documents required in the **TDS**, in accordance with the General Conditions of Contract, subject to ITT 38.2 (b), using the Performance Security and other Forms included in Section X, Contract Forms, or another form acceptable to the Procuring Entity. A foreign institution providing a bank guarantee shall have a correspondent financial institution located in Kenya, unless the Procuring Entity has agreed in writing that a correspondent bank is not required.

48.2 Failure of the successful Tenderer to submit the above-mentioned Performance Security and other documents required in the **TDS** or sign the Contract shall constitute sufficient grounds for the annulment of the award and forfeiture of the Tender Security. In that event the Procuring Entity may award the Contract to the Tenderer offering the next Best Evaluated Tender.

48.3 Performance security shall not be required for contracts estimated to cost less than the amount specified in the Regulations.

49. Publication of Procurement Contract

Within fourteen days after signing the contract, the Procuring Entity shall publish the awarded contract at its notice boards and websites; and on the Website of the Authority. At the minimum,

the notice shall contain the following information:

a) name and address of the Procuring Entity;
b) name and reference number of the contract being awarded, a summary of its scope and the selection method used;
c) the name of the successful Tenderer, the final total contract price, the contract duration.
d) dates of signature, commencement and completion of contract;
e) names of all Tenderers that submitted Tenders, and their Tender prices as read out at Tender opening.

50. Procurement Related Complaint and Administrative Review

50.1 The procedures for making Procurement-related Complaints shall be specified in the **TDS.**

50.2 A request for administrative review shall be made in the form provided under contract forms.

SECTION II – TENDER DATA SHEET (TDS)

The following specific data shall compliment, supplement or amend the provisions in the instructions to Tenderers (ITT). Whenever there is a conflict, the provisions herein shall prevail over those in (ITT).

A. General	
ITT 1.1	The name of the contract is **MALAVA TOWN ROADS PHASE 1** The reference number of the contract is **KURA/RMLF/HQ/308/2026-2027** The number and identification of lots (contracts) comprising this Tender are *[insert number and identification of lots (contracts)] NOT APPLICABLE*
ITT 2.3	The information made available on competing firms is as follows: NOT APPLICABLE
ITT 2.4	The firms that provided consulting services for the contract being tendered for are: NOT APPLICABLE
ITT 3.1	Maximum number of members in the Joint Venture (JV) shall be: NOT APPLICABLE
ITT 3.6	As per ITT 3.6, 3.7 and 3.9
ITT 3.12	Registration with the National Construction Authority (NCA) as **(indicated in the Tender Notice)** is a requirement for the tender. The selected tenderer shall be given opportunity to apply for the Practising License before such award and signature of contract. Bidders to provide certified copies of the NCA certificate
ITT 3.14	Only a valid Tax Compliance Certificate verifiable via the Kenya Revenue Authority shall be accepted and is a condition for tender.
B. Contents of Tender Document	
ITT7.1	(i) The Tenderer will submit any request for clarification in writing at the address: **SUPPLY CHAIN MANAGEMENT** **BARABARA PLAZA OFF AIRPORT SOUTH ROAD MAZAO ROAD, GROUND FLOOR, BLOCK D** **P.O. BOX 41727-00100, NAIROBI** supplychain@kura.go.ke To reach the Procuring Entity **not later than three (3) Days to the close of the tender.** (ii) The Procuring Entity will publish its response at the website www.kura.go.ke
ITT7.2	Pre-arranged pretender site visit This visit shall take place as **indicated in the Tender Notice**. Bidders are required to appraise themselves with the site conditions before bidding and complete the certificate of Tenderer's site visit. Bidders are also required to provide their details by registering before submitting the tender at the; **SUPPLY CHAIN MANAGEMENT OFFICE** **BARABARA PLAZA OFF AIRPORT SOUTH ROAD MAZAO ROAD, GROUND FLOOR, BLOCK D**
ITT7.3	The Tenderer will submit any questions in writing to reach the Procuring Entity **not later than three (3) Days to the close of the tender.**
ITT7.5	The procuring Entity's website where Minutes of the pre- Tenders meeting and the pre-arranged pretender will be published is www.kura.go.ke
ITT 8.2	The procuring Entity's website where addenda to the tender will be published is www.kura.go.ke
C. Preparation of Tenders	
ITT 11.1 (h)	The Tenderer shall submit the following additional documents in its Tender: 1. Written Form of Power Attorney, signed by Commissioner for Oaths 2. Duly filled Schedule of Adjustment Data

	3. Appendix to form of tender fully filled, stamped and signed 4. A schedule of basic rates for construction materials fully filled, stamped and signed 5. Schedule of completed and ongoing works 6. Certified certificate of incorporation 7. Certified copy of recent CR12 form generated through the system-(12months before opening date) from Registrar of companies 8. Copy of registration certificate with National Construction Authority in the stated category. 9. Copies of audited accounts and bank statements for the last Three years ALL CERTIFICATION MUST BE BY COMMISSIONER FOR OATHS.
ITT 13.1	Alternative Tenders SHALL NOT BE considered.
ITT 13.2	Alternative times for completion SHALL NOT BE permitted.
ITT 13.4	Alternative technical solutions shall be permitted for the following parts of the Works: N/A
ITT 14.5	The prices quoted by the Tenderer shall be : SUBJECT TO ADJUSTMENTS IN LINE WITH THE PROVISIONS OF THE CONDITIONS OF CONTRACT ON COST ADJUSTMENT
ITT 15.2	Foreign currency requirements NOT allowed
ITT 16	Provide statement of work methods, equipment, personnel, mobilization, construction schedule and site organization.
ITT17.11	Additional: Bidders shall fully disclose any history of non-performance, including contract terminations, delays, or adverse performance evaluations. Failure to disclose such information shall result in disqualification. The Procuring Entity reserves the right to verify all disclosures against its internal records and other credible sources. Any bidder with a demonstrated history of non-performance, as determined by the Procuring Entity, shall be deemed not to have met the qualification requirements.
ITT 18.1	The Tender validity period shall be 210DAYS
ITT 18.3	Additional ITT 18.3 on Clause 18 a) The Number of days beyond the expiry of the initial tender validity period will be 30 days. b) The Tender price shall be adjusted by the following percentages of the tender price: (i) By 0% of the local currency portion of the contract price adjusted to reflect local inflation during the period of extension, and (ii) By 0% the foreign currency portion of the contract price adjusted to reflect the international inflation during the period of extension.
ITT 19.1	A Tender Security ***SHALL BE*** required. A Tender-Securing Declaration ***SHALL NOT BE*** required. The amount and currency of the Tender Security shall be **Kshs. 1,600,000.00**
19.2 (iv)	The acceptable TENDER SECURITY IS IN THE FORM OF UNCONDITIONAL BANK GUARANTEE ISSUED BY BANKS REGULATED BY THE CENTRAL BANK OF KENYA
ITT 19.8	Add after "Where" the words "tender security or" The Procuring Entity will declare the Tenderer ineligible to be awarded contracts by the Procuring Entity for a period of 3 Financial years.
ITT 20.1	In addition to the original of the tender, the number of copies is 1 No.
D. Submission and Opening of Tenders	
ITT 21.3	A tender package or container that cannot fit in the tender box shall be received as follows: Bulky tenders which will not fit in the tender box shall be received and registered in the Bulk Tender Register at the supply chain management office.

ITT 22.1	For tender submission purposes only, the Procuring Entity address is: 1. Name of Procuring Entity: KENYA URBAN ROADS AUTHORITY (KURA) 2. Postal Address Attention: DIRECTOR GENERAL P.O. BOX 41727-00100, NAIROBI 3. Physical address for the hand courier delivery to an office or tender box SUPPLY CHAIN MANAGEMENT BARABARA PLAZA OFF AIRPORT SOUTH ROAD MAZAO ROAD, GROUND FLOOR, BLOCK D 4. Date and Time for submission of tenders **(As per the tender notice).** 5. Tenderers SHALL NOT submit tenders electronically.
ITT 25.1	If Tenderers are allowed to submit tenders electronically, they shall follow the electronic tender submission procedures specified below: NOT APPLICABLE
ITT 25.6	The tenders ***SHALL*** be initialed by representatives of the Procuring Entity attending Tender opening. Initialization shall be conducted as follows: - ALL MEMBERS OF TENDER OPENING COMMITTEE SHALL • Initialize summary page of BOQ, • Form of Tender • Bid Bonds/Tender Securing Declaration Form • Cover page of the Bid Document • Last page of the Bid Document
E. Evaluation and Comparison of Tenders	
ITT 30.3	The adjustment shall be based on AVERAGE price of the item or component as quoted in other substantially responsive Tenders. If the price of the item or component cannot be derived from the price of other substantially responsive tenders, the Procuring Entity shall use its lowest estimate. ***NOT APPLICABLE***
ITT 31.2	The arithmetic error(s) shall be considered a major deviation that leads to disqualification.
ITT 33.2	A margin of domestic preference of *shall not* apply.
ITT 33.4	The invitation to tender is extended to the following groups that qualify for Reservations: **as specified in the Tender Notice**
ITT 34.1	At this time the Procuring Entity DOES NOT INTEND to execute certain specific parts of the works by subcontractors selected in advance.
ITT 34.2	Contractors may propose subcontracting, maximum percentage of subcontracting permitted is as specified in the special condition of contract. Tenderers planning to subcontract more than 10% of total volume of work shall specify, in the form of tender, the activity (ies) or parts of the works to be subcontracted along with complete details of the subcontractors and their qualification and experience.
ITT 34.3	The parts of the works for which the procuring entity permits tenderers to propose Specialized Subcontractors are designed as follows: N/A
ITT 35.2 (d)	Additional requirements apply. These are detailed in the evaluation criteria in Section III-Evaluation and Qualification Criteria
ITT 37	Assessment of Abnormally Low Tenders and Abnormally High Tenders, Unbalanced and/or Front-Loaded Tenders. **Shall apply**
ITT 37.1	Any bid below 85% of the Procuring Entity's budget shall be considered as Abnormally Low Tender Abnormally low Tenders shall be treated as per the procedure outlined in Section III, Evaluation and Qualification Criteria

ITT 37.4	Any bid above the Procuring Entity's budget shall be considered as Abnormally High Tender Abnormally high Tenders shall be treated as per the procedure outlined in Section III, Evaluation and Qualification Criteria (POST QUALIFICATION EVALUATION CRITERIA)
ITT 48.2	Additional requirements are: These are detailed in the evaluation criteria in Section III, Evaluation and Qualification Criteria. (POST QUALIFICATION EVALUATION CRITERIA)
ITT 50.1	The procedures for making a Procurement related Complaint are available from the PPRA website info@ppra.go.ke or complaints@ppra.go.ke If a Tenderer wishes to make a Procurement-related Complaint, the Tenderer should submit its complaint following these procedures, in writing (by the quickest means available) that is either by hand delivery or email to: For the attention: ENG. SILAS M. KINOTI MBS Title/position: DIRECTOR GENERAL Procuring Entity: KENYA URBAN ROADS AUTHORITY E-mail address: dg@kura.go.ke In summary, a Procurement related Complaint may challenge any of the following: i. The terms of the Tender Documents; and ii. The Procuring Entity's decision to award the contract

SECTION III- EVALUATION AND QUALIFICATION CRITERIA

1. General Provisions

2.1 This section contains the criteria that the Employer shall use to evaluate tender and qualify tenderers. No other factors, methods or criteria shall be used other than specified in this tender document. The Tenderer shall provide all the information requested in the forms included in Section IV, Tendering Forms. The Procuring Entity shall use **the Standard Tender Evaluation Document for Goods and Works** for evaluating Tenders.

2.2 Wherever a Tenderer is required to state a monetary amount, Tenderers should indicate the Kenya Shilling equivalent using the rate of exchange determined as follows:

2.2.1 For construction turnover or financial data required for each year - Exchange rate prevailing on the last day of the respective calendar year (in which the amounts for that year is to be converted) was originally established.

2.2.2 Value of single contract - Exchange rate prevailing on the date of the contract signature.

2.2.3 Exchange rates shall be taken from the publicly available source identified in the ITT 14.3. Any error in determining the exchange rates in the Tender may be corrected by the Procuring Entity.

2.3 Evaluation and contract award Criteria

The Procuring Entity shall use the criteria and methodologies listed in this Section to evaluate tenders and arrive at the Lowest Evaluated Tender. The tender that (i) meets the qualification criteria, (ii) has been determined to be substantially responsive to the Tender Documents, and (iii) is determined to have the Lowest Evaluated Tender price shall be selected for award of contract.

2. Preliminary Examination for Determination of Responsiveness

The Procuring Entity will start by examining all tenders to ensure they meet in all respects the eligibility criteria and other requirements in the ITT, and that the tender is complete in all aspects in meeting the requirements of *"Part 2 – Procuring Entity's Works Requirements",* including checking for tenders with unacceptable errors, abnormally low tenders, abnormally high tenders and tenders that are front loaded. The Standard Tender Evaluation Report for Goods and Works for evaluating Tenders provides clear guidelines on how to deal with review of these requirements. Tenders that do not pass the Preliminary Examination will be considered irresponsive and will not be considered further.

PRE- QUALIFICATION CHECKLIST FOR COMPLETENESS AND RESPONSIVENESS

MANDATORY REQUIREMENTS

No.	Evaluation Criterion	Qualification Requirements	Documents/Information to be verified.	Result
MR1	Form of Tender	Form of Tender duly completed and signed by authorised person Tenderer to use stationery bearing its letterhead Declarations on ownership	-Completed Form of Tender -Certificate of Tender Determination accompanied by written power of attorney - Any alterations/erasers in the Form of tender countersigned. -verify completion-all information provided, form of tender duly is signed and stamp - Bidder's letterhead/stationery. - Provide information of company ownership.	Yes/No
MR2	Tender Security	Submitted in the prescribed form, amount and validity as provided in this tender. Form of Tender Security (Tender Guarantee) - In the format provided with all conditions. Must be valid for 30 days after bid validity.	-Tender Guarantee in prescribed format -Amount as per the Tender Notice -Bank issuer must be bank recognized by Central Bank of Kenya. -verify all conditions and validity of 30 days after bid validity. -Tender Securing Declaration where applicable — provide bid validity as provided, must be completed, signed and stamped.	Yes/No
MR3	Tender Validity	Tender remains valid for the period specified in the Tender Data sheet/Notice	-Validity as provided for in tender Notice/Tender Data Sheet.	Yes/No
MR4	Authority to Sign	Tender signed by authorised person in accordance with the Tender Document	-Certificate of Independent Tender Determination -Certified Power of Attorney	Yes/No
MR5	Eligibility	Tenderer meets the eligibility requirements specified in the Tender Document All information provided as instructed in the forms	-Provide all information as required-Forms 4, ELI-1.1 and ELI-1.2 as shown here below:- -Form 5 A(a–f); CON-2 for -Non-Performance, -Pending Litigation -Litigation History- no consistent history of court/arbitral award decisions against the Tenderer in the last 3 years -Conflict of interest -Nationality- all Directors' Identification provided. -Confidential business questionnaire -Tenderer's Qualification form	Yes/No

No.	Evaluation Criterion	Qualification Requirements	Documents/Information to be verified.	Result
			-verify required information in provided affidavit. -Power of Attorney -all this information must be accompanied by certified sworn affidavit where applicable.	
MR6	Registration	Certificate of incorporation documents submitted as required	-Certificate of Incorporation -verify certification by Commissioner of Oaths as per ITT 13.1h	Yes/No
MR7	Tax Compliance	Valid Tax Compliance Certificate	-Tax Compliance Certificate — verify validity ITT 13.1h	Yes/No
MR8	Debarment Declaration	Required declaration confirming that the tenderer is not debarred	-Completed, signed and stamped debarment declaration. -Verify Form SD1 / Form 5C	Yes/No
MR9	Anti-Corruption Declaration	Required declaration on corruption/fraudulent practices submitted	-Completed, signed and stamped anti-corruption declaration. -Verify Form SD2 / Form 5C	Yes/No
MR10	Independent Tender Determination	Certificate of Independent Tender Determination duly completed	-Completed, signed and stamped Form 5B — Verify Form 5B; Certificate of Independent Tender Determination; check prescribed Power of Attorney.	Yes/No
MR11	Code of Ethics	Declaration and Commitment to Code of Ethics submitted	-Completed, signed and stamped as prescribed Code of Ethics/self-declaration form Verify Form SD3, ELI:1.3.3	Yes/No
MR12	Beneficial Ownership	Commitment to provide Beneficial Ownership Disclosure information as prescribed in the provided Form.	-Completed, signed and stamped commitment to provide beneficial ownership information Form - Verify Section IV Form 8;	Yes/No
MR13	Tender Documents	All documents expressly listed as mandatory under the Tender Document must be submitted. The person or persons signing the bid shall initial all pages of the bid where entries have been made. All pages with entries (Typed or handwritten) must be Initialled.	Tender submission — verify all expressly mandatory documents are included; pages containing entries are initialed; alterations countersigned.	Yes/No
MR14	BOQ / Schedule of Prices	Bills of Quantities must be filled, stamped and initialled Fill all the rates in the bill of Quantities sign and stamp counter sign any alteration(s)	-Fully Priced BOQ — verify all rates and items are filled, all pages of BOQs signed and stamped, and any alterations/erasers in the BOQ countersigned.	Yes/No
MR15	Key Personnel and	Provide all required information	All required fields/information are completed, signed	Yes/No

No.	Evaluation Criterion	Qualification Requirements	Documents/Information to be verified.	Result
	Declaration Forms	Properly fill, sign and stamp	and stamped. — verify Forms PER 1 & 2 and CVs	
MR16	Form Equipment	Required equipment schedule and supporting information submitted Properly fill, sign and Stamp. Provide all required information	-All required information is provided, signed and stamped. -Verify Form EQU/Equipment Schedule for all equipment and supporting evidence.	Yes/No
MR17	Specific Experience	Specific Construction and Contract Management Experience Construction Experience in Key activities	Forms EXP-4.2(a) and EXP-4.2(b), with supporting schedules/contracts/certificates — verify required information and prescribed execution.	Yes/No
MR18	General Experience	General Construction and Contract Management Experience for the past 5 years	Forms EXP-4.1, with supporting schedules/contracts/certificates — verify required information from the forms and certificate of incorporation or Business Registration.	Yes/No
MR19	Financial Capacity	Financial capacity information submitted	Forms FIN-3.1, FIN-3.2 and FIN-3.3, with supporting financial statements/bank or credit facility evidence — verify required information and Certifications.	Yes/No
MR20	Current Commitments	Provide all required information as provided in the Form. Properly fill, sign and stamp	-Form FIN-3.4 and supporting contract contracts/certificates — verify that all required information is filled and completion certificates provided.	Yes/No
MR21	Site Visit	Compliance with mandatory site visit requirement, where applicable	-Site visit certificate must be signed and stamped by employer's representative. -Confirmation of attendance register -Verify compliance with the mandatory requirements of the site visit and ensure the signatory of the employer was in attendance.	Yes/No/NA
MR22	Addenda	Applicable addenda must be incorporated. clarifications acknowledged and incorporated	-Applicable addendum -Clarification — verify acknowledgement and attachment/incorporation.	Yes/No/NA
MR23	Serialization / Electronic Submission	Tender submitted in the format and manner prescribed in the Tender Document/e-GP	-e-GP submission record -Verify submission in the prescribed electronic format and manner. -Do not duplicate the page-serialization check under MR13.	Yes/No
MR24	National Construction Authority Certificate	Category as stated in the Tender Notice and TDS	NCA Certificate — verify category against the Tender Notice and TDS.	Yes/No
MR25	Recent CR12 Certificate	Certified and current as provided in the criteria.	Recent CR12 — verify current date/status as required by the Tender Notice and certification by Commissioner of Oaths.	

No.	Evaluation Criterion	Qualification Requirements	Documents/Information to be verified.	Result
MR26	AGPO	Specific AGPO registration certificate as specified in TDS	-Verify the validity of AGPO certificate attached ITT 11.1(h)	
MR27	Special conditions of contract	Provide all required information.	Verify Section IX Form must be filled, signed and stamped.	

3. Tender Evaluation (ITT 35)

Price evaluation: In addition to the criteria listed in ITT 35.2 (a) – (d) the following criteria shall apply:

i) **Alternative Completion Times,** if permitted under ITT 13.2, will be evaluated as follows: … N/A …

ii) **Alternative Technical Solutions** for specified parts of the Works, if permitted under ITT 13.4, will be evaluated as follows :…… N/A ……

iii) **Other Criteria; i**f permitted under ITT 35.2(d) :…… N/A .....

iv) **Assessment of Abnormally Low/Abnormally High, Unbalanced and/or Front-Loaded Tenders** as per ITT 37 and ITT 38 in comparison to the Procuring Entity Cost Estimate.

4. Multiple Contracts -NOT *APPLICABLE*

4.1. Multiple contracts will be permitted in accordance with ITT 35.4. Tenderers are evaluated on basis of Lots and the lowest evaluated tenderer identified for each Lot. The Procuring Entity will select one Option of the two Options listed below for award of Contracts.

Option 1

i) If a tenderer wins only one Lot, the tenderer will be awarded a contract for that Lot, provided the tenderer meets the Eligibility and Qualification Criteria for that Lot.

ii) If a tenderer wins more than one Lot, the tender will be awarded contracts for all won Lots, provided the tenderer meets the aggregate Eligibility and Qualification Criteria for all the Lots. The tenderer will be

iii) awarded the combination of Lots for which the tenderer qualifies and the others will be considered for award to second lowest the tenderers.

Option 2

The Procuring Entity will consider all possible combinations of won Lots [contract(s)] and determine the combinations with the lowest evaluated price. Tenders will then be awarded to the Tenderer or Tenderers in the combinations provided the tenderer meets the aggregate Eligibility and Qualification Criteria for all the won Lots.

5. Alternative Tenders (ITT 13.1) – NOT APPLICABLE

An alternative if permitted under ITT 13.1, will be evaluated as follows:

The Procuring Entity shall consider Tenders offered for alternatives as specified in Part2-Works Requirements. Only the technical alternatives, if any, of the Tenderer with the Best Evaluated Tender conforming to the basic technical requirements shall be considered by the Procuring

6. Margin of Preference

6.1. If the TDS so specifies, the Procuring Entity will grant a margin of preference of fifteen percent (15%) to be loaded on evaluated price of the foreign tenderers, where the percentage of shareholding of Kenyan citizens is less than fifty-one percent (51%).

6.2. Contractors applying for such preference shall be asked to provide, as part of the data for qualification, such information, including details of ownership, as shall be required to determine whether, according to the classification established by the Procuring Entity, a particular contract or or group of contractors qualifies for a margin of preference.

6.3. After Tenders have been received and reviewed by the Procuring Entity, responsive Tenders shall be assessed to ascertain their percentage of shareholding of Kenyan citizens. Responsive tenders to shall be classified into the following groups:

i) Group A: tenders offered by Kenyan Contractors and other Tenderers where Kenyan citizens hold shares of over fifty one percent (51%).

ii) Group B: tenders offered by foreign Contractors and other Tenderers where Kenyan citizens hold shares of less than fifty one percent (51%).

6.4. All evaluated tenders in each group shall, as a first evaluation step, be compared to determine the lowest tender, and the lowest evaluated tender in each group shall be further compared with each other. If, as a result of this comparison, a tender from Group A is the lowest, it shall be selected for the award. If a tender from Group B is the lowest, an amount equal to the percentage indicated in Item 3.1 of the respective tender price, including unconditional discounts and excluding provisional sums and the cost of day works, if any, shall be added to the evaluated price offered in each tender from Group B. All tenders shall then be compared using new prices with added prices to Group B and the lowest evaluated tender from Group A. If the tender from Group A is still the lowest tender, it shall be selected for award. If not, the lowest evaluated tender from Group B based on the first evaluation price shall be selected.

7. Post qualification and Contract award (ITT 39), more specifically,

a) In case the tender was subject to post-qualification, the contract shall be awarded to the lowest evaluated tenderer, subject to confirmation of pre-qualification data, if so required.

b) In case the tender was not subject to post-qualification, the tender that has been determined to be the lowest evaluated tenderer shall be considered for contract award, subject to meeting each of the following conditions.

i) The Tenderer shall demonstrate that it has access to, or has available, liquid assets, unencumbered real assets, lines of credit, and other financial means (independent of any contractual advance payment) sufficient to meet the construction cash flow of Kenya Shillings **Kenya Shillings 16,000,000.00 (20% of the EE/ budget)**

i) Minimum <u>average</u> annual construction turnover of Kenya Shilling **Kenya Shillings 80,000,000.00 (Equivalent to the EE/Budget)** calculated as total certified payments received for contracts in progress and/or completed within the last 3 years divided by 3

ii) At least three (3) No. contract(s) of a similar nature executed within Kenya, or the East African Community or abroad, that have been satisfactorily and substantially completed as a prime contractor, or joint venture member, management contractor or sub-contractor prior to the applications submission deadline each of minimum value **Kenya Shillings 40,000,000.00 (50% of Budget/EE)**

iii) Contractor's Representative and Key Personnel, which are specified in the Qualification Criteria.

iv) Contractor's key equipment listed on the table "Contractor's Equipment" below and more specifically listed in the Qualification Criteria.
Bidder to provide specific logbooks or lease agreements for the plants and equipment for this tender.

v) Other conditions depending on their seriousness.

c) History of non-performing contracts:

Tenderer and each member of JV incase the Tenderer is a JV, shall demonstrate that Non-performance of a contract did not occur because of the default of the Tenderer, or the member of a JV in the last three (3) years. The required information shall be furnished in the appropriate form.

d) Pending Litigation

Financial position and prospective long-term profitability of the Single Tenderer, and in the case the Tenderer is a JV, of each member of the JV, shall remain sound according to criteria established with respect to Financial Capability under Paragraph (i) above if all pending litigation will be resolved against the Tenderer. Tenderer shall provide information on pending litigations in the appropriate form.

e) Litigation History

There shall be no consistent history of court/arbitral award decisions against the Tenderer, in the last **Three (3) years**. All parties to the contract shall furnish the information in the appropriate form about any litigation or arbitration resulting from contracts completed or

ongoing under its execution over the years specified. A consistent history of awards against the Tenderer or any member of a JV may result in rejection of the tender.

f) Current commitments

The total value of outstanding works on the on-going contracts shall not exceed budget.

8. POST QUALIFICATION EVALUATION CRITERIA

KES>ABOVE 70 MILLION

Item No.	Qualification Subject	Qualification Requirement	*Document To be Completed by Tenderer*	*For Procuring Entity's Use (Qualification Met or Not Met)*
1.		**FINANCIAL CAPABILITY**		
	Working Capital	(i) The Tenderer shall demonstrate that they have access to, or has available, liquid assets, unencumbered real assets, lines of credit, and other financial means (independent of any contractual advance payment) sufficient to meet the construction cash flow requirements estimated as **Kenya Shillings 16,000,000.00 (20% of EE/Budget).** equivalent for the subject contract(s) net of the Tenderer's other commitments. (ii) The Tenderers shall also demonstrate, to the satisfaction of the Procuring Entity, that it has adequate sources of finance to meet the cash flow requirements on works currently in progress and for future contract commitments. (iii) Bidders shall provide audited balance sheets or, if not required by the laws of the Tenderer's country, other financial statements acceptable to the Procuring Entity, for the last two (2) shall be submitted and must demonstrate the current soundness of the Tenderer's financial position and indicate its prospective long-term profitability (as demonstrated by Financial Evaluation Ratios).	*Form FIN-3.1, with attachments* *Financial Ratio Form t be signed by the auditor registered with ICPAK and other one of the Directors* • ***Financial Ratios*** *Computations shall be made for the following Ratios* *-Working Capital* *-Debt to Equity Ratio* *-Current Ratio* *-Operating Cash Flow Ratio* • *Line of credit froma a reputable bank* • *Six (6) months Bank statements stamped by the issuing bank showing 20% of the contract sum*	

Item No.	Qualification Subject	Qualification Requirement	*Document To be Completed by Tenderer*	*For Procuring Entity's Use (Qualification Met or Not Met)*
			Attachments include: *Audited accounts last two years* • *Bank statement last six (6) months shall be verified by the issuing bank* • *Line Credit – should be current and covers 20% of the contract sum and shall be verified from the issuing bank* • *Audited accounts* *All pages must be initialed and stamped by both a practicing Auditor registered with ICPAK and one of the Directors.* *Auditor's practicing membership number from ICPAK must be indicated and a valid practicing license shall be provided.* *The financial statements shall conform to the International Financial Reporting Standards (IRFS)*	

Item No.	Qualification Subject	Qualification Requirement	*Document To be Completed by Tenderer*	*For Procuring Entity's Use (Qualification Met or Not Met)*
	Average Annual Construction Turnover	Minimum average annual construction turnover in *Kenya Shillings* **80,000,000.00 (Equivalent to Budget/EE),** equivalent calculated as total certified payments received for contracts in progress and/or completed within the last Three (3) years, divided by Three (3) years	Form FIN – 3.2 *Attachments include* ▪ *Financial Statements* ▪ *Payment Certificates* ▪ *Verifiable completion certificates*	
2.		**EXPERIENCE**		
	General Construction Experience	Experience under construction contracts in the role of prime contractor, JV member, sub-contractor, or management contractor for at least the last five (5) years	*Form EXP – 4.1* *Attach Letters of Award and Completion Certificates* • *For subcontracts, provide the following;* *a) Award letter of the main contractor* *b) Award letter of the subcontract* *c) Completion letter of the subcontract* *d) Witnessed subcontract agreement* *e) Recommendation letter fro the supervising Engineer accompanied by the email address and telephone contacts of the supervising Engineer for verification*	

Item No.	Qualification Subject	Qualification Requirement	*Document To be Completed by Tenderer*	*For Procuring Entity's Use (Qualification Met or Not Met)*
	Specific Construction & Contract Management Experience	A minimum number of three (3) similar contracts specified below that have been satisfactorily and substantially completed as a prime contractor, joint venture member, management contractor or sub-contractor prior to the applications submission deadline. three (3) contracts, each of minimum value **Kenya shillings 40,000,000.00 of 50% of EE/ budget** equivalent. The similarity shall be based on the physical size, complexity, methods/technology or other characteristics. At least two of the three qualifying Contractors must have been undertaken and satisfactorily completed by the bidder in the capacity of a main Contractor.	Form EXP 4.2(a) & (b) Provide Letters of Award and Completion Certificates. For subcontracts/**entry level bidders**, provide the following; • Award letter of the main contractor • Award letter of the subcontract. • Completion letter of the subcontract. • Witnessed subcontract agreement • Recommendation letter from the supervising Engineer accompanied by the email address and telephone contacts of the supervising Engineer for verification	
3.		**PLANT AND EQUIPMENT**		
	Contractor's Equipment	Bidder shall provide evidence of ownership whether owned or leased (except those from Mechanical & Transport Department (MOTIHUD) Those hiring shall provide certified copies of Lease Agreement Valid for the current FY 2026-2027. *Equipment as provided below;*	Form EQU and Equipment Table (9) below	

Item No.	Qualification Subject	Qualification Requirement			*Document To be Completed by Tenderer*	*For Procuring Entity's Use (Qualification Met or Not Met)*
		Item No.	**Equipment Details**	***Minimum Number Required for the Contract Execution**		
		A. Bituminous plant and equipment	Asphalt Concrete Plant Bitumen Pressure distributor Asphalt concrete paver **Subtotal for A**	.. 1 1 2		
		B. Compactors	Vibrating compaction plate 300 mm wide Vibrating compaction plate 600 mm wide **Subtotal for B**	.. .. ..		
		C. Concrete Equipment	Mobile concrete mixers Concrete vibrators **Subtotal for C**	1 1 2		
		D. Transport (Tippers, dumpers, water tankers)	4X2 tippers payload 7 – 12 tonnes 6X4 tippers payload 16 – 20 tonnes 8X4 tippers payload 16 – 20 tonnes Flatbed lorries Water tankers (18,000 – 20,000 litres capacity) **Subtotal for D – tippers & dumpers**	.. 4 .. 1 5		
		E. Earth – Moving Equipment	Wheeled loader Motor graders (93 - 205kW) Trench excavator **Subtotal for E**	1 1 .. 2		

Item No.	Qualification Subject	Qualification Requirement			*Document To be Completed by Tenderer*	*For Procuring Entity's Use (Qualification Met or Not Met)*
		F. Excavators	Hydraulic crawler mounted (7 – 10 tonnes) – 0.25 – 0.4 m3 SAE bucket. Hydraulic crawler mounted (10 – 16 tonnes) – 0.40 – 0.60 m3 SAE bucket. Hydraulic wheel mounted (7 – 10 tonnes) – 0.25 – 0.4 m3 SAE bucket. Hydraulic wheel mounted (10 – 16 tonnes) – 0.40 – 0.6 m3 SAE bucket. Hydraulic wheel mounted back loader (7 – 10 tonnes) – 0.25 – 0.4 m3 SAE bucket. Pulverised Mixer **Subtotal for F**	.. 1 .. .. **1**		
		G. Rollers	Self-propelled single drum vibrating (various types) Self-propelled double drum vibrating roller Pedestrian roller Pneumatic rubber tyre (1-2 tonnes/wheel) Sheep's foot roller **Subtotal for G**	1 1 1 1 1 **5**		
4.		**KEY PERSONNEL**				

Item No.	Qualification Subject	Qualification Requirement	*Document To be Completed by Tenderer*	*For Procuring Entity's Use (Qualification Met or Not Met)*
	Contractor's Representative Key Personnel	The site staff shall possess minimum levels of qualifications set below; **HQ Staff:** Qualification: Diploma in Civil Engineering 5 years relevant experience, responsible for technical assurance and progress oversight. **Site Agent:** Qualification: Degree in Civil Engineering Registration with EBK and a member of IEK, with valid registration and practicing licenses General Experience-7 yrs Specific Experience - 5 yrs **Deputy Site Agent:** Qualification: Degree in Civil Engineering Registration with EBK and a member of IEK,with valid registration and practicing licenses General Experience-5 yrs Specific Experience - 3 yrs **Foreman:** Qualification= Diploma Civil Engineering Registration with KETRB and IETT General Experience =5 yrs Specific Experience = 3 Yrs **Surveyor:** Qualification = Diploma in Surveying Must be registered with Institution of Surveyors of Kenya	Form PER-1 and Form PER-2	

Item No.	Qualification Subject	Qualification Requirement	*Document To be Completed by Tenderer*	*For Procuring Entity's Use (Qualification Met or Not Met)*
		General Experience =5 yrs Specific Experience = 3yrs **Material Technician (QA)/QC** Diploma in Civil Engineering / Materials Technology or Certificates in Materials Testing Grade III, II and I; ≥5 years' experience in field and laboratory testing, QA/QC records and material approvals. HSE/Traffic Safety Officer Recognized HSE/OSH qualification; ≥5 years relevant construction traffic management experience.		
5.		**WORK METHODOLOGY**		
	Work Methodology	Submission of a brief work methodology giving a brief description of how you intend to carry out the work including; Signed resourced work **programme chart on A3 SHEET with** SUPERIMPOSED cash flow projection, traffic management, quality assurance of works and general Site organization in not less than three (3) pages and not more than five (5) pages (typed, font 12 and single spaced). The Programme should be tender specific Further, the methodology should include the following: a) **Procedure on execution of activities as outlined in the BoQs** b) Allocation of machinery/labor in execution the activities c)Procedures in quality control of the activities described in BoQs d) Provide a methodology on health and safety during the construction period. e) Personal protectivé equipment f) Signage g) Delineation of construction and passage of traffic Passage of traffic at night h) Site Organization. i) Risk Management j) Environmental Management	Section IV; Schedule B and E	

Item No.	Qualification Subject	Qualification Requirement	*Document To be Completed by Tenderer*	*For Procuring Entity's Use (Qualification Met or Not Met)*
6.		**CURRENT COMMITMENTS**		
	On-going Contracts	The total value of outstanding works on the on-going contracts shall not exceed the budget Disclose all live contracts; show that cash flow, management staff and committed equipment remain sufficient. Financial resources demonstrated for this bid must be net of concurrent obligations failures to which bidder shall be disqualified	Form FIN - 3.4	
7.		**BILL OF QUANTITIES, ERRORS AND RATES**		
	Abnormally Low Bid, abnormally high Bid, Unbalanced bid and/or Front-Loaded Bid/ errors in BOQ	Each BOQ rate shall be checked against the estimated rates to determine if the rates are abnormally Low, abnormally high, unbalanced or front-loaded. The Procuring Entity shall undertake an analysis of bidders 'rates which are potentially lower/higher than the known prevailing market rates leading to disqualification. Bids with arithmetic errors shall also be disqualified.	The BOQ rates should be balanced with no arithmetic errors. Bidders are required to quote within the known market rates.	
	REMARKS			

SUMMARY OF POST- QUALIFICATION CRITERIA

KES >ABOVE 70 MILLION

ITEM		DESCRIPTION	ASSESSMENT
1		FINANCIAL CAPACITY	Met or Not Met
	a	Working capital of **Kshs. 16,000,000.00 (20% of contract price)**	
	b	Cash flow statement (forecasts)	
	c	Audited Statements of account for the last 2 years presented in the Internationally Financial Reporting Standard	
	d	Turnover **Kshs. 80,000,000.00 (Equivalent to Budget)**	
		EXPERIENCE	
2	a	General Experience as Contractor in the last five years.	
	b	Experience in road construction in the last five years	
	c	Experience as a prime contractor, joint venture member, management contractor or sub-contractor in at least 3 No. Road projects with value of **Kshs. 40,000,000.00 (50% of EE/Budget)**	
3		KEY PERSONNEL	
	a	HQ staff meets criteria	
	b	Site Agent meets criteria	
	c	Foreman meets criteria	
	c	Surveyor meets criteria	
	d	Materials Technician (QA)/QC meets criteria	
	e	HSE/Traffic Safety Officer	
4		PLANT AND EQUIPMENT	
	a	Bitumen Pressure distributor	
	b	Asphalt concrete paver	
	c	Mobile concrete mixers	
	d	Concrete vibrators	
	e	6X4 tippers payload 16 – 20 tonnes (4No.)	
	f	Water tankers (18,000 – 20,000 litres capacity)	
	g	Wheeled loader	
	h	Motor graders (93 - 205kW)	
	i	Hydraulic crawler mounted (10 – 16 tonnes)	
	J	Self-propelled single drum vibrating (various types)	
	k	Self-propelled double drum vibrating roller	
	l	Pedestrian roller	
	m	Pneumatic rubber tyre (1-2 tonnes/wheel)	
	n	Sheep's foot roller	
5		WORK METHODOLOGY	
	a	Submission of a work methodology and a proposed resource work programme with superimposed cash projection. Work programme to be done in A3 paper	
6		CURRENT COMMITMENTS	
		The total value of outstanding works on the on-going contracts must not exceed the average annual turnover for the last two years	
7		BILL OF QUANTITIES, EERORS AND RATES	
	a	The BOQ rates should be balanced with no arithmetic errors. Bidders are required to quote within the known rates	
		Remarks	

Tenderers must achieve MET in all the measured parameters to qualify.

Tenderers who do not meet all the criteria listed above will be automatically disqualified. Tenderers who meet all the technical criteria will be subjected to financial evaluation.

SECTION IV ~ TENDERING FORMS

QUALIFICATION FORMS

1. FORM 1. FOREIGN TENDERERS 40%RULE.
2. TENDERERS QUALIFICATION WITHOUT PRE-QUALIFICATION.
   - 2.1 FORM ELI-1.1.
   - 2.2 FORM ELI-1.2.
   - 2.3 FORM CON –2.
   - 2.4 FORM FIN –3.1.
   - 2.5 FORM FIN –3.2.
   - 2.6 FORM FIN –3.3.
   - 2.7 FORM FIN –3.4.
   - 2.8 FORM EXP -4.1.
   - 2.9 FORM EXP - 4.2(a).
   - 2.10 FORM EXP -4.2 (b).

OTHER FORMS

1. FORM OF TENDER.
   - 1.1 Tender Eligibility – Confidential Business Questionnaire
   - 1.2 Certificate of Independent Tender Determination
   - 1.3 Self – Declaration Forms
   - 1.4 Appendix 1: Fraud and Corruption
   - 1.5 Appendix to Tender
2. FORM OF TENDER SECURITY - DEMAND BANK GUARANTEE.
3. FORM OF TENDER SECURITY (TENDER BOND).
4. FORM OF TENDER-SECURING DECLARATION.
5. Written power of attorney
6. Certificate of Bidder's Site Visit

TECHNICAL PROPOSAL FORMS

Schedule A: Site Organization

Schedule B: Proposed Work Methodology

Schedule C: Proposed Contractor's Key Personnel

Form Per -1.

Form Per-2.

Schedule D: Initial Proposed Program of Works

Schedule E: Contractor's Equipment Form EQU

Schedule F: Derivation of Rates

Schedule G: Materials Basic Rates & Weightings for Price Adjustments

Part I: Schedule of Materials Basic Rates

Part II: Schedule of Weightings

SECTION IV-A: QUALIFICATION FORMS

1. FORM 1. FOREIGN TENDERERS 40% RULE

Pursuant to ITT 3.9, a foreign tenderer must complete this form to demonstrate that the tender fulfils this condition.

ITEM	Description of Item	Describe Location of Source	Cost in Kenyan Shillings	Comments if any
	A. Local Labour			
1.				
2.				
3.				
4.				
5.				
	B.			
1.				
2.				
3.				
4.				
5.				
	C. Local Materials			
1.				
2.				
3.				
4.				
5.				
	D.			
1.				
2.				
3.				
4.				
5.				
	E.			
1.				
2.				
3.				
4.				
5.				
	TOTAL COST OF LOCAL CONTENT		XXX	
	PERCENTAGE OF CONTRACT PRICE		XXXXX	

2. TENDERERS QUALIFICATION WITHOUT PRE-QUALIFICATION

To establish its qualifications to perform the contract in accordance with Section III, Evaluation and Qualification Criteria the Tenderer shall provide the information requested in the corresponding Information Sheets included hereunder.

2.1 FORM ELI-1.1 TENDERER INFORMATION FORM

Date …….

ITT No. and title ……..

Tenderer's Name:
• In case of Joint Venture (JV): name of each member:
• Tenderer's actual or intended country of registration: (*Indicate country of constitution*)
• Tenderer's actual or intended year of incorporation:
• Tenderer's legal address (in country of registration):
Tenderer's authorized representative information Name:……. Address:…… • Telephone/Fax Numbers:……. • Email address:……..
1.Attached are copies of original documents of ▪ Articles of incorporation (or equivalent documents of constitution or association), and /or documents of registration of legal entity named above, in accordance with ITT 3.6 In case of JV, Letter of intent to form JV or JV agreement in accordance with ITT 3.5 ▪ In case of state –owned enterprise or institution, in accordance with ITT 3.8 documents establishing: 2. Included are organizational charts, a list of board of directors and the beneficial ownership.

2.2 FORM ELI-1.2 : TENDERER'S JV INFORMATION FORM

(to be completed for each member of Tenderer's JV)

Date:……..

ITT No. and Title:……..

Tenderer's JV Name:
JV member's Name:
JV member's country of registration:
JV member's year of constitution:
JV member's legal address in country of constitution:
Tenderer's authorized representative information Name:…… Address:……. Telephone/ Fax Numbers:……. Email address:……..
1.Attached are copies of original documents of ▪ Articles of incorporation (or equivalent documents of constitution or association), and /or documents of registration of legal entity named above, in accordance with ITT43.6 ▪ In case of state –owned enterprise or institution , in accordance with ITT 3.8 documents establishing : 2. Included are organizational charts, a list of board of directors and the beneficial ownership.

2.3 FORM CON – 2: HISTORICAL CONTRACT NON-PERFORMANCE, PENDING LITIGATION AND LITIGATION HISTORY

Tenderer's Name:_____

Date:_____

JV Member's Name_____

ITT No. and title:_____

Non performed contracts in accordance with section III, evaluation and qualification criteria.			
▪ Contract Non-performance did not occur since 1st January *2023* specified in section III, Evaluation and Qualification criteria, Sub-factor 2.1. ▪ Contracts not performed since 1st January, 2023 specified in section III, Evaluation and Qualification criteria, requirement 2.1.			
Year	**Non- performed portioned of contract**	**Contract identification**	**Total contracts amount (current Value, currency exchange rate and Kenya Shillings equivalent)**
(insert Year)	(*insert amount and percentage*)	Contract Identification*:(indicate complete contract name/number: and any other identification)* Name of Procuring Entity*:(Insert Full name)* Address of procuring entity: *(insert street/city/country)* Reasons for nonperformance *(Indicate main reason(s))*	*(insert amount)*
▪ No-Pending litigation in accordance with section III evaluation and qualification criteria, sub factor 2.3 ▪ Pending litigation in accordance with section III evaluation and qualification criteria, sub factor 2.3 as indicated below.			

Year of Dispute	Amount of Dispute (Currency)	Contract Identification	Total Contract Amount (currency), Kenya Shilling Equivalent (exchange rate)
		Contract Identification:…… …… Name of Procuring Entity……... Address of Procuring Entity:……... Matter in dispute:…….. Party who initiated the dispute:…….. Status of dispute:……..	
		Contract Identification: …….. Name of Procuring Entity:…… …… Address of Procuring Entity: …… Matter in dispute:…… … Party who initiated the dispute: …… Status of dispute:…… …….	

Litigation History in accordance with Section III, Evaluation and Qualification Criteria

- No Litigation History in accordance with Section Ill, Evaluation and Qualification Criteria, Sub- Factor 2.4.
- Litigation History in accordance with Section III, Evaluation and Qualification Criteria, Sub- Factor 2.4 as indicated below.

[insert year}	*[insert percentage]*	Contract Identification: [indicate complete contract name, number, and any other identification] Name of Procuring Entity: *[insert full name]* Address of Procuring Entity: *[insert street/city/country}* Matter in dispute: *[indicate main issues in dispute}* Party who initiated the dispute: *[indicate "Procuring Entity" or "Contractor"}* Reason(s) for Litigation and award decision *[indicate main reason(s)}*	*[insert amount}*

Year of dispute	Amount in dispute (currency)	Contract Identification	Total Contract Amount (currency), Kenya Shilling Equivalent (exchange rate)
		Contract Identification: Name of Procuring Entity: Address of Procuring Entity: Matter in dispute: Party who initiated the dispute: Status of dispute:	
		Contract Identification: Name of Procuring Entity: Address of Procuring Entity: Matter in dispute: Party who initiated the dispute: Status of dispute:	

2.4 FORM FIN –3.1: FINANCIAL SITUATION AND PERFORMANCE

Tenderer's Name:_____

Date:_____

JV Member's Name_____

ITT No. and title:

2.4.1 Financial Data

Type of financial information in ~~~~~~~~~~~~~~~~~~~~(Currency)	**Historic information for previous Five Years (5 years) (amount in currency, currency, exchange rate*, USD equivalent)**				
	Year 1	Year 2	Year 3	Year 4	Year 5
Statement of financial position (Information from Balance sheet)					
Total Asset (TA)					
Total Liabilities (TL)					
New Equity/ Net worth (NW)					
Current Assets (CA)					
Current Liabilities (CL)					
Working Capital (WC)					
Information from Income Statement					
Total Revenue (TR)					
Profits before Taxes (PBT)					
Cashflow information					
Cashfow from operating activities					

*Refer to ITT 15 for exchange rate.

DETAILED FINANCIAL SITUATION EVALUATION

The following shall be used for detailed Financial Evaluation.

No.	Auditors Assessment (Last Three Years)		
	Y1	Y2	Y3
Current Ratio= Current Assets / Current Liabilities			
Debt to Equity Ratio = Total Liabilities / Total Equity			
Working Capital = Current Assets-Current Liabilities			
Operating Cash Flow Ratio = Cash Flow from Operations /Current Liabilities			
Working Capital			

The above Financial Ratios have to be derived from first Principles from the Audit Statements.

2.4.2 Sources of Finance

Specify sources of finance to meet the cash flow requirements on works currently in progress and for future contract commitments.

No.	Source of Finance	Amount(Kenya Shillings Equivalent)
1.		
2.		
3.		

2.4.3 Financial documents

The Tenderer and its parties shall provide copies of financial statements for the last 5years pursuant Section III, Evaluation and Qualifications Criteria, Sub-factor 3.1. The financial statements shall:

a) reflect the financial situation of the Tenderer or incase of JV member, and not an affiliated entity (such as parent company or group member).

b) be independently audited or certified in accordance with local legislation.

c) be complete, including all notes to the financial statements.

d) correspond to accounting periods already completed and audited.

Attached are copies of financial statements [1] for the last 5years required above; and complying with the requirements

2.5 FORM FIN – 3.2: AVERAGE ANNUAL CONSTRUCTION TURNOVER

Tenderer's Name:_

Date:_____

JV Member's Name_____

ITT No. and title:__

	Annual turnover data (construction only)		
Year	**Amount currency**	**Exchange rate**	**Kenya shilling equivalent**
[indicate year]	[inert amount and indicate currency]		
2023			
2024			
2025			
Average annual construction Turnover*			

**See section III, evaluation criteria, Sub Factor 3.2*

[1] *If the most recent set of financial statements is for a period earlier than 9 months from the date of Tender, the reason for this should be justified.*

2.6 FORM FIN –3.3: FINANCIAL RESOURCES

Specify proposed sources of financing, such as liquid assets, unencumbered real assets, lines of credit, and other financial means, net of current commitments, available to meet the total construction cashflow demands of the subject contractor contracts as specified in Section III, Evaluation and Qualification Criteria.

Financial Resources		
No.	**Source of financing**	**Amount (Kenya Shilling equivalent)**
1		
2		
3		

2.7 FORM FIN–3.4: CURRENT CONTRACT COMMITMENTS / WORKS IN PROGRESS

Tenderers and each member to a JV should provide information on their current commitments on all contracts that have been awarded, or for which a letter of intent or acceptance has been received, or for contracts approaching completion, but for which an unqualified, full completion certificate has yet to be issued.

Current Contract Commitments					
No.	Name of Contract	Procuring Entity's Contact Address, Tel	Value of Outstanding Work [Current Kenya Shilling/month Equivalent]	Estimated Completion Date	Average Monthly Invoicing Over Last Six Months [Kenya Shilling/month]
1					
2					
3					
4					
5					
6					

Signature: ……..

Stamp and Date)day month year): …….

2.8 FORM EXP -4.1: GENERAL CONSTRUCTION EXPERIENCE

Tenderer's Name: Date: JV Member's Name:
ITT No. and title:

Starting Year	Ending Year	Contract Identification	Role of tenderer
		Contract Name:_____ Brief Description of the Works performed by the tenderer: …….. Amount of contract: _____ Name of Procuring Entity: _____ Address: _____	
		Contract Name:_____ Brief Description of the Works performed by the tenderer: …….. Amount of contract: _____ Name of Procuring Entity Address: _____	
		Contract Name:_____ Brief Description of the Works performed by the tenderer: …… Amount of contract: _____ Name of Procuring Entity: _____ Address: _____	
		Contract Name:_____ Brief Description of the Works performed by the tenderer: ……. Amount of contract: _____ Name of Procuring Entity: _____ Address: _____	

2.9 FORM EXP -4.2(A): SPECIFIC CONSTRUCTION AND CONTRACT MANAGEMENT EXPERIENCE

Tenderer's Name: Date: JV Member's Name ITT No. and title:

Similar Contract No.	**Information**			
Contract Identification				
Award date				
Completion date				
Role in contract Total Contract Amount	Prime Contractor ☐	Member in JV ☐	Management Contractor ☐	Sub-Contractor ☐
If a member in a JV or sub-contractor, specify participation in total Contract amount			**Kenya Shilling**	
Procuring Entity's name: Address: Telephone/fax number Email:				
Description of the similarity in accordance too Sub-Factor 4.2(a) of Section III				
1. Amount				
2. Physical size of required work items				
3. Complexity				
4. Methods/Technology				
5. Construction rate for key activities				
6. Other characteristics				

2.10 FORM EXP -4.2(B): CONSTRUCTION EXPERIENCE IN KEY ACTIVITIES

Tenderer's Name:_____ Date:_____ Tenderer's JV Member Name:_____ Sub-contractor's Name[2] (as perITT34):_____ ITT No. and title:_____

All Contractors for key activities must complete the information in this form as per ITT 34 and Section III, Evaluation and Qualification Criteria, Sub-Factor 4.2.

Similar Contract No.	**Information**			
Contract Identification				
Award date				
Completion date				
Role in contract	Prime Contractor ☐	Member in JV ☐	Management Contractor ☐	Sub-Contractor ☐
Total Contract Amount				**Kenya Shilling**
Quantity (Volume, number or rate of production, as applicable) performed under the contract per year or part of the year	Total quantity in the contract (i)	Percentage participation (ii)	Actual Quantity Performed (i)x(ii)	
Year 1				
Year 2				
Year 3				
Year 4				
Year 5				
Procuring Entity's name: Address: Telephone/fax number Email:				
Description of the Key Activities in accordance with Sub-Factor 4.2(b) of Section III				

1. Key Activity No. one

2. Key Activity No. two
3. Key Activity No. three
etc

SECTION IV-B: OTHER FORMS

1. FORM OF TENDER

INSTRUCTIONS TO TENDERERS

a) The Tenderer must prepare this Form of Tender on stationery with its letterhead clearly showing the Tenderer's complete name and business address.

b) All italicized text is to help Tenderer in preparing this form.

c) Tenderer must complete and sign CERTIFICATE OF INDEPENDENT TENDER DETERMINATION and the SELF DECLARATION OF THE TENDERER attached to this Form of Tender.

d) The Form of Tender shall include the following Forms duly completed and signed by the Tenderer.

i) Tenderer's Eligibility-Confidential Business Questionnaire.

ii) Certificate of Independent Tender Determination.

iii) Self-Declaration of the Tenderer.

Date of this Tender submission: [*insert date (as day, month and year) of Tender submission*]
Request for Tender No.: [*insert identification*] **Name and description of Tender** *[Insert as pe ITT)* **Alternative No.:** [*insert identification No if this is a Tender for an alternative*]

To: [*insert complete name of Procuring*

Entity] Dear Sirs,

1. In accordance with the Conditions of Contract, Specifications, Drawings and Bills of Quantities for the execution of the above named Works, we, the undersigned offer to construct and complete the Works and remedy any defects therein for the sum of Kenya Shillings [*[Amount in figures]* _____Kenya Shillings *[amount in words]*_____

   The above amount includes foreign currency amount (s) of [*state figure or a percentage and currency*] [figures] [words]

   The percentage or amount quoted above does not include provisional sums, and only allows not more than two foreign currencies.

2. We undertake, if our tender is accepted, to commence theWorks as soon as is reasonably possible after the receipt of the Engineer's notice to commence, and to complete the whole of the Works comprised in the Contract within the time stated in the Particular Conditions of Contract.

3. We agree to adhere by this tender until_____*[Insert date],* and it shall remain binding upon us and may be accepted at any time before that date.

4. Unless and until a formal Agreement is prepared and executed this tender together with your written acceptance thereof, shall constitute abinding Contract between us. We further understand that you are not bound to accept the lowest or any tender you may receive.

5. We, the undersigned, further declare that:

   i) *No reservations:* We have examined and have no reservations to the tender document, including Addenda issued in accordance with ITT 8;

   ii) *Eligibility:* We meet the eligibility requirements and have no conflict of interest in accordance with ITT 3 and 4;

   iii) *Tender-Securing Declaration:* We have not been suspended nor declared ineligible by the Procuring Entity based on execution of a Tender-Securing or Proposal-Securing Declaration in the Procuring Entity's Country in accordance with ITT 19.8;

(iv) Conformity: We offer to execute in conformity with the tendering documents and in accordance with the implementation and completion specified in the construction schedule, the following Works: *[insert a brief description of the Works];*

(v) Tender Price: The total price of our Tender, excluding any discounts offered in item 1 above is: *[Insert one of the options below as appropriate]*

(vi) **Option1,** incase of one lot: Total price is: [*insert the total price of the Tender in words and figures, indicating the various amounts and the respective currencies*]; Or

Option2, in case of multiple lots:

a) *Total price of each lot* [*insert the total price of each lot in words and figures, indicating the various amounts and the respective currencies*]; and

b) *Total price of all lots* (sum of all lots) [*insert the total price of all lots in words and figures, indicating the various amounts and the respective currencies*];

vii) Discounts: The discounts offered and the methodology for their application are:

viii) The discounts offered are: [*Specify in detail each discount offered.*]

ix) The exact method of calculations to determine the net price after application of discounts is shown below: [*Specify in detail the method that shall be used to apply the discounts*];

x) *Tender Validity Period:* Our Tender shall be valid for the period specified in TDS 18.1 (as amended, if applicable) from the date fixed for the Tender submission deadline specified in TDS 22.1(as amended, if applicable), and it shall remain binding upon us and may be accepted at any time before the expiration of that period;

xi) *Performance Security:* If our Tender is accepted, we commit to obtain a Performance Security in accordance with the Tendering document;

xii) *One Tender Per Tender:* We are not submitting any other Tender(s) as an individual Tender, and we are not participating in any other Tender(s) as a Joint Venture member or as a subcontractor, and meet the requirements of ITT3.4, other than alternative Tenders submitted in accordance with ITT 13.3;

xiii) *Suspension and Debarment:* We, along with any of our subcontractors, suppliers, Engineer, manufacturers, or service providers for any part of the contract, are not subject to, and not controlled by any entity or individual that is subject to, a temporary suspension or a debarment imposed by the Public Procurement Regulatory Authority or any other entity of the Government of Kenya, or any international organization.

xiv) *State-owned enterprise or institution:* [*select the appropriate option and delete the other*] [*We are not a state- owned enterprise or institution*]/[*We are a state-owned enterprise or institution but meet the requirements of ITT 3.7*];

xv) *Commissions, gratuities, fees:* We have paid, or will pay the following commissions, gratuities, or fees with respect to the tender process or execution of the Contract: *[insert complete name of each Recipient, its full address, the reason for which each commission or gratuity was paid and the amount and currency of each such commission or gratuity]*

xvi)

Name of Recipient	*Address*	*Reason*	*Amount*

(If XXXXX has been paid or is to be paid, indicate "XXXXX.")

xvii) *Binding Contract:* We understand that this Tender, together with your written acceptance thereof included in your Letter of Acceptance, shall constitute a binding contract between us, until a formal contract is prepared and executed;

xviii) *Not Bound to Accept:* We understand that you are not bound to accept the lowest evaluated cost Tender, the Most Advantageous Tender or any other. Tender that you may receive;

xix) *Fraud and Corruption:* We hereby certify that we have taken steps to ensure that no person acting for us or on our behalf engages in any type of Fraud and Corruption;

xx) *Collusive practices:* We hereby certify and confirm that the tender is genuine, non-collusive and made with the intention of accepting the contract if awarded. To this effect we have signed the "Certificate of Independent Tender Determination" attached below.

xxi) We undertake to adhere by the Code of Ethics for Persons Participating in Public Procurement and Asset Disposal, copy available from_____(*specify website*) during the procurement process and the execution of any resulting contract.

xxii) We, the Tenderer, have completed fully and signed the following Forms as part of our Tender:

a) Tenderer's Eligibility; Confidential Business Questionnaire – to establish we are not in any conflict to interest.

b) Certificate of Independent Tender Determination – to declare that we completed the tender without colluding with other tenderers.

c) Self-Declaration of the Tenderer– to declare that we will, if awarded a contract, not engage in any form of fraud and corruption.

d) Declaration and commitment to the Code of Ethics for Persons Participating in Public Procurement and Asset Disposal.

Further, we confirm that we have read and understood the full content and scope of fraud and corruption as informed in **"Appendix 1- Fraud and Corruption"** attached to the Form of Tender.

Name of the Tenderer: *[*insert complete name of person signing the Tender*]……

Name of the person duly authorized to sign the Tender on behalf of the Tenderer: **[*insert complete name of person duly authorized to sign the Tender*]……

Title of the person signing the Tender: [*insert complete title of the person signing the Tender*]

Signature of the person named above: [*insert signature of person whose name and capacity*

are shown above] **Date signed** [*insert date of signing*] day of [*insert month*], [*insert year*]

Date signed day of ,

Notes

** In the case of the Tender submitted by joint venture specify the name of the Joint Venture as Tenderer*
*** Person signing the Tender shall have the power of attorney given by the Tenderer to be attached with the Tender,*

1.1. TENDERER'S ELIGIBILITY-CONFIDENTIAL BUSINESS QUESTIONNAIRE

Instruction to Tenderer

Tender is instructed to complete the particulars required in this Form, *one form for each entity if Tender is a JV.* Tenderer is further reminded that it is an offence to give false information on this Form.

i) Tenderer's details

S/No.	ITEM	DESCRIPTION
1	Name of procuring entity	
2	Reference number of the tender	
3	Date and time of tender opening	
4	Name of tenderer	
5	Full Address and Contact Details of Tenderer	1. Country. 2. City. 3. County. 4. Building. 5. Floor. 6. Postal Address. 7. Name and email of contact person.
6	Current Trade License Registration Number and Expiring date	
7	Name, county and full address (postal and physical addresses, email and telephone number) of Registering Body/Agency	
8	Description of Nature of Business	
9	Maximum value of business which the Tendered handles	
10	State if Tenders Company is listed in stock exchange, give name and full address (postal and physical addresses, email and telephone number) of state which stock exchange	

General and Specific Details

i) **Sole Proprietor,** provide the following details.

Name in full Age

Nationality Country of Origin Citizenship

ii) **Partnership,** provide the following details.

	Name of Partners	Nationality	Citizenship	%Shares owned
1				
2				
3				

iii) **Registered Company, provide the following details.**

i) Private or public Company _____

ii) State the nominal and issued capital of the Company

Nominal Kenya Shillings (Equivalent).....

Issued Kenya Shillings (Equivalent).....

iii) Give details of Directors as follows.

	Name of Director	Nationality	Citizenship	%Shares owned
1				
2				
3				

iv) **DISCLOSURE OF INTEREST-** Interest of the Firm in the Procuring Entity.

iv) Are there any person/persons in…… (*Name of Procuring Entity)* who has/have an interest or relationship in this firm? Yes/No……

If yes, provide details as follows.

	Name of Person	Designation in the procuring entity	Interest or Relationship with Tenderer
1			
2			
3			

ii) Conflict of interest disclosure

	Type of Conflict	Disclosure YES or NO	If YES, provide details of the relationship with Tenderer
1	Tenderer is directly or indirectly controlled by or is under common control with another tenderer		
2	Tenderer receives or has received any direct or indirect subsidy from another tenderer		
3	Tenderer has the same legal representative as another tenderer		
4	Tenderer has another relationship with another tenderer, directly or indirectly or through common third parties, that puts it in a position to influence the tender of another tenderer, or influence the decisions of the Procuring Entity regarding this tendering process.		
5	Any of the Tenderer's Affiliates participated as a consultant in the preparation if the design or technical specifications of the works that are subject of the tender.		
6	Tenderer would be providing goods, non-consulting services or consulting services during implementation of the contract specified in this Tender Document.		
7	Tenderer has a close business or family relationship with a professional staff of the Procuring Entity who are directly or indirectly involved in the preparation of the Tender Document or Specifications of the Contract, and/or the Tender Evaluation process of such contract.		
8	Tenderer has a close business or family relationship with a professional staff of the Procuring Entity who would be involved in the implementation or supervision of the contract.		
9	Has the conflict stemming from such relationship stated in item 6 and 7 above been resolved in a manner acceptable to the Procuring Entity throughout the tendering process and execution of the Contract.		

Certification

On behalf of the Tenderer, I certify that the information given above is complete, current and accurate as at the date of submission.

Full Name_____ Title or Designation

_____

_____ _____

(Signature) *(Date)*

1.2. CERTIFICATE OF INDEPENDENT TENDER DETERMINATION

I, the undersigned, in submitting the accompanying Letter of Tender to the___

_____[Name of Procuring Entity]

for:_____[Name and number of tender] in response to the request for tenders made by:_____[Name of Tenderer] do hereby make the following statements that I certify to be true and complete in every respect:

I certify, on behalf of [Name of Tenderer] that:

1. I have read and I understand the contents of this Certificate;
2. I understand that the Tender will be disqualified if this Certificate is found not to be true and complete in every respect;
3. I am the authorized representative of the Tenderer with authority to sign this Certificate, and to submit theTender on behalf of the Tenderer;
4. For the purposes of this Certificate and the Tender, I understand that the word "competitor" shall include any individual or organization, other than the Tenderer, whether or not affiliated with the Tenderer, who:
   a) has been requested to submit a Tender in response to this request for tenders;
   b) could potentially submit a tender in response to this request for tenders, based on their qualifications, abilities or experience;
5. The Tenderer discloses that [check one of the following, as applicable]:
   a) The Tenderer has arrived at the Tender independently from, and without consultation, communication, agreement or arrangement with, any competitor;
   b) The Tenderer has entered into consultations, communications, agreements or arrangements with one or more competitors regarding this request for tenders, and the Tenderer discloses, in the attached document(s), complete details thereof, including the names of the competitors and the nature of, and reasons for, such consultations, communications, agreements or arrangements;
6. In particular, without limiting the generality of paragraphs (5) (a) or (5) (b) above, there has been no consultation, communication, agreement or arrangement with any competitor regarding:
   a) prices;
   b) methods, factors or formulas used to calculate prices;
   c) the intention or decision to submit, or not to submit, a tender; or
   d) the submission of a tender which does not meet the specifications of the request for Tenders; except as specifically disclosed pursuant to paragraph (5) (b) above;
7. In addition, there has been no consultation, communication, agreement or arrangement with any competitor regarding the quality, quantity, specifications or delivery particulars of the works or services to which this request for tenders relates, except as specifically authorized by the procuring authority or as specifically disclosed pursuant to paragraph (5) (b) above;
8. The terms of the Tender have not been, and will not be, knowingly disclosed by the Tenderer, directly or indirectly, to any competitor, prior to the date and time of the official tender opening, or of the awarding of the Contract, whichever comes first, unless otherwise required by law or as specifically disclosed pursuant to paragraph (5) (b) above.

Name

Title

Date

[Name, title and signature of authorized agent of Tenderer and Date]

1.3. SELF-DECLARATION FORMS

1.3.1 FORM SD1: SELF DECLARATION THAT THE PERSON/TENDERER IS NOT DEBARRED IN THE MATTER OF THE PUBLIC PROCUREMENT AND ASSET DISPOSAL ACT 2015.

I, ……., of Post Office Box ……..……. being a resident of

…….. in the Republic of ……. do hereby make a

statement as follows: -

1. THAT I am the Company Secretary/Chief Executive/Managing Director/Principal Officer/Director of

   ……...…….. *(insert name of the Company)* who is a Bidder in respect of

   Tender No.

   …….. for ……. *(insert tender title/description)* for

   ……. *(insert name of the Procuring entity)* and duly authorized and competent to

   make this statement.

2. THAT the aforesaid Bidder, its Directors and subcontractors have not been debarred from participating in procurement proceeding under Part IV of the Act.

3. THAT what is deposed to herein above is true to the best of my knowledge, information and belief.

……	……	……
….	.	…
(Title)	(Signature)	(Date)

Bidder Official Stamp

1.3.2 FORM SD2: SELF DECLARATION THAT THE TENDERER WILL NOT ENGAGE IN ANY CORRUPT OR FRAUDULENT PRACTICE

I, ……. of P. O. Box ……. being a resident

of……. in the Republic of…_____……. .do hereby make a statement as follows: -

1. THAT I am the Chief Executive/Managing Director/Principal Officer/Director of ……...…… *(insert name of the Company)* who is a Bidder in respect of Tender No. …….. for ……... *(insert tender title/description)* for …… *(insert name of the Procuring entity)* and duly authorized and competent to make this statement.

2. THAT the aforesaid Bidder, its servants and/or agents /subcontractors will not engage in any corrupt or fraudulent practice and has not been requested to pay any inducement to any member of the Board, Management, Staff and/or employees and/or agents of……. *(insert name of the Procuring entity)* which is the procuring entity.

3. THAT the aforesaid Bidder, its servants and/or agents /subcontractors have not offered any inducement to any member of the Board, Management, Staff and/or employees and/or agents of……... *(name of the procuring entity)*

4. THAT the aforesaid Bidder will not engage/has not engaged in any corrosive practice with other bidders participating in the subject tender

5. THAT what is deponed to herein above is true to the best of my knowledge, information and belief.

…… ……

(Title) (Signature) (Date)

Bidder's Official Stamp

1.3.3 FORM SD3: DECLARATION AND COMMITMENT TO THE CODE OF ETHICS

I …….....……. (person) on behalf of *(Name of the Business/Company/Firm*)

…….....declare that I have read and fully understood the contents of the Public Procurement & Asset Disposal Act, 2015, Regulations and the Code of Ethics for persons participating in Public Procurement and Asset Disposal and my responsibilities under the Code.

I do hereby commit to abide by the provisions of the Code of Ethics for persons participating in Public Procurement and Asset Disposal.

Name of Authorized signatory.....

Sign.....

Position.....

Office address..... Telephone.....

E-mail.....

Name of the Firm/Company.....

Date.....

(Company Seal/Rubber Stamp where applicable) Witness

Name.....

Sign.....

Date.....

1.4. APPENDIX 1-FRAUD AND CORRUPTION

(Appendix 1 shall not be modified)

1. Purpose

1.1 The Government of Kenya's Anti-Corruption and Economic Crime laws and their sanction's policies and procedures, Public Procurement and Asset Disposal Act *(no. 33 of 2015)* and its Regulation, and any other Kenya's Acts or Regulations related to Fraud and Corruption, and similar offences, shall apply with respect to Public Procurement Processes and Contracts that are governed by the laws of Kenya.

2. Requirements

1.2 The Government of Kenya requires that all parties including Procuring Entities, Tenderers, (applicants/proposers), Consultants, Contractors and Suppliers; any Sub-contractors, Sub-consultants, Service providers or Suppliers; any Agents (whether declared or not); and any of their Personnel, involved and engaged in procurement under Kenya's Laws and Regulation, observe the highest standard of ethics during the procurement process, selection and contract execution of all contracts, and refrain from Fraud and Corruption and fully comply with Kenya's laws and Regulations as per paragraphs 1.1 above.

1.3 Kenya's public procurement and asset disposal act *(no. 33 of 2015)* under Section 66 describes rules to be followed and actions to be taken in dealing with Corrupt, Coercive, Obstructive, Collusive or Fraudulent practices, and Conflicts of Interest in procurement including consequences for offences committed. A few of the provisions noted below highlight Kenya's policy of no tolerance for such practices and behavior:

1) a person to whom this Act applies shall not be involved in any corrupt, coercive, obstructive, collusive or fraudulent practice; or conflicts of interest in any procurement or asset disposal proceeding;

2) A person referred to under subsection (1) who contravenes the provisions of that sub-section commits an offence;

3) Without limiting the generality of the subsection (1) and (2), the person shall be—
   a) disqualified from entering into a contract for a procurement or asset disposal proceeding; or
   b) if a contract has already been entered into with the person, the contract shall be voidable;

4) The voiding of a contract by the procuring entity under subsection (7) does not limit any legal remedy the procuring entity may have;

5) An employee or agent of the procuring entity or a member of the Board or committee of the procuring entity who has a conflict of interest with respect to a procurement—
   a) shall not take part in the procurement proceedings;
   b) shall not, after a procurement contract has been entered into, take part in any decision relating to the procurement or contract; and
   c) shall not be a subcontractor for the bidder to whom was awarded contract, or a member of the group of bidders to whom the contract was awarded, but the subcontractor appointed shall meet all the requirements of this Act.

6) An employee, agent or member described in subsection (1) who refrains from doing anything prohibited under that subsection, but for that subsection, would have been within his or her duties shall disclose the conflict of interest to the procuring entity;

7) If a person contravenes subsection (1) with respect to a conflict of interest described in subsection (5) (a) and the contract is awarded to the person or his relative or to another person in whom one of them had a director indirect pecuniary interest, the contract shall be terminated and all costs incurred by the public entity shall be made good by the awarding officer. Etc.

1.4 In compliance with Kenya's laws, regulations and policies mentioned above, the Procuring Entity:

a) Defines broadly, for the purposes of the above provisions, the terms set forth below as follows:

i) "corrupt practice" is the offering, giving, receiving, or soliciting, directly or indirectly, of anything of value to influence improperly the actions of another party;

ii) "fraudulent practice" is any act or omission, including misrepresentation, that knowingly or recklessly misleads, or attempts to mislead, a party to obtain financial or other benefit or to avoid an obligation;

iii) "collusive practice" is an arrangement between two or more parties designed to achieve an improper purpose, including to influence improperly the actions of another party;

iv) "coercive practice" is impairing or harming, or threatening to impair or harm, directly or indirectly, any party or the property of the party to influence improperly the actions of a party;

v) "obstructive practice" is:

- deliberately destroying, falsifying, altering, or concealing of evidence material to the investigation or making false statements to investigators in order to materially impede investigation by Public Procurement Regulatory Authority (PPRA) or any other appropriate authority appointed by Government of Kenya into allegations of a corrupt, fraudulent, coercive, or collusive practice; and/or threatening, harassing, or intimidating any party to prevent it from disclosing its knowledge of matters relevant to the investigation or from pursuing the investigation; or

- acts intended to materially impede the exercise of the PPRA's or the appointed authority's inspection and audit rights provided for under paragraph 2.3 e. below.

b) Defines more specifically, in accordance with the above procurement Act provisions set forth for fraudulent and collusive practices as follows:

"fraudulent practice" includes a misrepresentation of fact in order to influence a procurement or disposal process or the exercise of a contract to the detriment of the procuring entity or the tenderer or the contractor, and includes collusive practices amongst tenderers prior to or after tender submission designed to establish tender prices at artificial non-competitive levels and to deprive the procuring entity of the benefits of free and open competition.

c) Rejects a proposal for award[1] of a contract if PPRA determines that the firm or individual recommended for award, any of its personnel, or its agents, or its sub-consultants, sub-contractors, service providers, suppliers and/ or their employees, has, directly or indirectly, engaged in corrupt, fraudulent, collusive, coercive, or obstructive practices in competing for the contract in question;

d) Pursuant to the Kenya's above stated Acts and Regulations, may sanction or recommend to appropriate authority(ies) for sanctioning and debarment of a firm or individual, as applicable under the Acts and Regulations;

e) Requires that a clause be included in Tender documents and Request for Proposal documents requiring (i) Tenderers (applicants/proposers), Consultants, Contractors, and Suppliers, and their Sub-contractors, Sub- consultants, Service providers, Suppliers, Agents personnel, permit the PPRA or any other appropriate authority appointed by Government of Kenya to inspect[2] all accounts, records and other documents relating to the procurement process, selection and/or contract execution, and to have them audited by auditors appointed by the PPRA or any other appropriate authority appointed by Government of Kenya; and

f) Pursuant to Section 62 of the above Act, requires Applicants/Tenderers to submit along with their Applications/Tenders/Proposals a "Self-Declaration Form" as included in the procurement document declaring that they and all parties involved in the procurement process and contract execution have not engaged/will not engage in any corrupt or fraudulent practices.

Name of Authorized Signatory……..

Designation ……..

Signature, Date and Stamp……..

---

[1] *For the avoidance of doubt, a party's ineligibility to be awarded a contract shall include, without limitation, (i) applying for pre-qualification, expressing interest in a consultancy, and tendering, either directly or as a nominated sub-contractor, nominated consultant, nominated manufacturer or supplier, or nominated service provider, in respect of such contract, and (ii) entering into an addendum or amendment introducing a material modification to any existing contract.*

[2] *Inspections in this context usually are investigative (i.e., forensic) in nature. They involve fact-finding activities undertaken by the Investigating Authority or persons appointed by the Procuring Entity to address specific matters related to investigations/audits, such as evaluating the veracity of an allegation of possible Fraud and Corruption, through the appropriate mechanisms. Such activity includes but is not limited to: accessing and examining a firm's or individual's financial records and information, and making copies thereof as relevant; accessing and examining any other documents, data and information (whether in hard copy or electronic format) deemed relevant for the investigation/audit, and making copies thereof as relevant; interviewing staff and other relevant individuals; performing physical inspections and site visits; and obtaining third party verification of information.*

1.5. APPENDIX TO TENDER

Schedule of Currency requirements
Summary of currencies of the Tender for_*[insert name of Section of the Works]*

Name of Currency:	*Amount payable*
Local currency: _____	
Foreign currency #1: _____	
*Foreign currency #2:*_____	
*Foreign currency #3:*_____	
Provisional sums expressed in local currency _____	*[To be entered by the procuring entity]*

Signed:…… Date ……

Stamp: ……..

2. FORM OF TENDER SECURITY - DEMAND BANK GUARANTEE

Beneficiary:_____

Request for Tenders No:_____

Date:_____

TENDER GUARANTEE No.:___

Guarantor: _____

1. We have been informed that_____(herein after called "the Applicant") has submitted or will submit to the Beneficiary its Tender (herein after called "the Tender") for the execution of

_____under Request for Tenders No._____("the ITT").

2. Furthermore, we understand that, according to the Beneficiary's conditions, Tenders must be supported by a Tender guarantee.

3. At the request of the Applicant, we, as Guarantor, hereby irrevocably undertake to pay the Beneficiary any sum or sums not exceeding in total an amount of_(_____) upon receipt by us of the Beneficiary's complying demand, supported by the Beneficiary's statement, whether in the demand itself or a separate signed document accompanying or identifying the demand, stating that either the Applicant:
   a) Has withdrawn its Tender during the period of Tender validity set forth in the Applicant's Letter of Tender ("the Tender Validity Period"), or any extension there to provided by the Applicant; or
   b) Having been notified of the acceptance of its Tender by the Beneficiary during the Tender Validity Period or any extension thereto provided by the Applicant, (i) has failed to execute the contract agreement, or (ii) has failed to furnish the Performance.

4. This guarantee will expire: (a) if the Applicant is the successful Tenderer, upon our receipt of copies of the contract agreement signed by the Applicant and the Performance Security and, or (b) if the Applicant is not the successful Tenderer, upon the earlier of (i) our receipt of a copy of the Beneficiary's notification to the Applicant of the results of the Tendering process; or(ii)twenty-eight days after the end of the Tender Validity Period.

5. Consequently, any demand for payment under this guarantee must be received by us at the office indicated above on or before that date.

_____

[signature(s)]

3. FORM OF TENDER SECURITY (TENDER BOND)

[The Surety shall fill in this Tender Bond Form in accordance with the instructions indicated.]
BOND NO.____

1. BY THIS BOND …….[name of tenderer] as Principal (herein after called "the Principal"), and …….[name, legal title, and address of surety], **authorized to transact business in KENYA** , as Surety (herein after called "the Surety"), are held and firmly bound unto [name of Purchaser]…….. as Obligee (herein after called "the Purchaser") in the sum of ……[amount of Bond]…….[amount in words], for the payment of which sum, well and truly to be made, we, the said Principal and Surety, bind ourselves, our successors and assigns, jointly and severally, firmly by these presents.

2. WHERE AS the Principal has submitted or will submit a written Tender to the Purchaser dated the_____
Day of, 20, for the supply of ……*[name of Contract]* (herein after called the "Tender").

3. NOW, THEREFORE, THE CONDITION OF THIS OBLIGATION is such that if the Principal:

   (a) Has withdrawn its Tender during the period of Tender validity set forth in the Principal's Letter of Tender ("the Tender Validity Period"), or any extension thereto provided by the Principal; or

   (b) having been notified of the acceptance of its Tender by the Purchaser during the Tender Validity Period or any extension thereto provided by the principal; (i) failed to execute the Contract agreement; or (ii) has failed to furnish the Performance Security, in accordance with the Instructions to tenderers ("ITT") of the Purchaser's Tendering document.

   then the Surety undertakes to immediately pay to the Purchaser up to the above amount upon receipt of the Purchaser's first written demand, without the Purchaser having to substantiate its demand, provided that in its demand the Purchaser shall state that the demand arises from the occurrence of any of the above events, specifying which event(s) has occurred.

4. The Surety hereby agrees that its obligation will remain in full force and effect upto and including the date 30 days after the date of expiration of the Tender Validity Period set forth in the Principal's Letter of Tender or any extension thereto provided by the Principal.

5. IN TESTIMONY WHEREOF, the Principal and the Surety have caused these presents to be executed in their respective names this ……..day of……20….

Principal: …….. Surety: ……..

Corporate Seal (where appropriate)

Signature: …….
(Printed Name & Title)

Signature: ……..
(Printed Name & Title)

[1] *The amount of the Bond shall be denominated in the currency Kenya shillings or the equivalent amount in a freely convertible currency.*

4. FORM OF TENDER-SECURING DECLARATION

[The Bidder shall complete this Form in accordance with the instructions indicated]

Date:..... *[insert date (as day, month and year) of Tender Submission]*

Tender No.:..... . *[insert number of tendering process]*

To: ..... *[insert complete name of Purchaser]*

I/We, the undersigned, declare that:

1. I/We understand that, according to your conditions, bids must be supported by a Tender-Securing Declaration.

2. I/We accept that I/we will automatically be suspended from being eligible for tendering in any contract with the Purchaser for the period of time of [**30 months**] starting on **date of opening of tender**, if we are in breach of our obligation(s) under the bid conditions, because we–(a) have withdrawn our tender during the period of tender validity specified by us in the Tendering Data Sheet; or (b) having been notified of the acceptance of our Bid by the Purchaser during the period of bid validity, (i) fail or refuse to execute the Contract, if required, or (ii) fail or refuse to furnish the Performance Security, in accordance with the instructions to tenders.

3. I/We understand that this Tender Securing Declaration shall expire if we are not the successful Tenderer(s), upon the earlier of:
   a) our receipt of a copy of your notification of the name of the successful Tenderer; or
   b) thirty days after the expiration of our Tender.

4. I/We understand that if I am/we are/in a Joint Venture, the Tender Securing Declaration must be in the name of the Joint Venture that submits the bid, and the Joint Venture has not been legally constituted at the time of bidding, the Tender Securing Declaration shall be in the names of all future partners as named in the letter of intent.

Signed:……..…

Capacity / title (director or partner or sole proprietor, etc.)

…….…….

Name:……

Duly authorized to sign the bid for and on behalf of: *[insert complete*

name of Tenderer] Dated on……. day of…….…….

[Insert date of signing]

Seal or stamp

5. FORM OF WRITTEN POWER OF ATTORNEY

The Bidder shall state here below the name(s) and address of his representative(s) who is/are authorized to receive on his behalf correspondence in connection with the Bid.

……..
(Name of Bidder's Representative in block letters)

……..
(Address of Bidder's Representative)

……..
(Signature of Bidder's Representative)

Alternate:

……..
(Name of Bidder's Representative in block letters)

……..
(Address of Bidder's Representative)

……..
(Signature of Bidder's Representative)

*To be filled by all Bidders.

*Both representative and alternate **must** attach copy of National Identification card or Passport.

6. CERTIFICATE OF BIDDER'S VISIT TO SITE

This is to certify that

[*Name/s*]……

……

Being the authorized representative/Agent of [*Name of bidder*]

……

……

Participated in the organised inspection visit of the site of the works for the (Name of Tender) **BUTERE TOWN ROADS PHASE 1**

TENDER No.: KURA/RMLF/HQ/308/2026-2027 held on

……..day of……20……..

Signed……..
(Employer's Representative)

……..

…….. ……..
(Name of Employer's Representative) (Designation)

NOTE: This form is to be completed at the time of the organized site visit.

SECTION IV-C: TECHNICAL PROPOSAL

The tenderer shall complete these sections as a Technical proposal to indicate how he/she intends to proceed with the works. The Procuring entity will review these Proposals and determine the extent to which they meet the required standards to complete the works.

Tenderers shall give below full particulars of the organization they propose to establish, direct, and administer the performance of the Contract. In particular, Tenderers shall indicate the location of site camps and the resources they intend to allocate to Self-Control Units for planning and monitoring purposes.

a) Site Organization Chart
    i. Organogram
    ii. Site Organization Layouts
    iii. Site Location Map
b) Narrative Description of Site Organization Chart

Schedule B: Proposed Work Methodology

[insert proposed work methodology]

Schedule C: Contractor's Key Personnel Schedule

Tenderers should provide the names and details of the suitably qualified Key Personnel to perform the Contract under Form PER-1. The data on their experience should be supplied using the Form PER-2 below for each candidate.

Form PER-1: Contractor's Representative and Key Personnel

1.	**Title of Position: HQ staff**	
	Name of Candidate:	
	Duration of Appointment	
	Time: Commitment for this Position	
	Expected Time Schedule for this Position	
2.	**Title of Position: Site Agent**	
	Name of Candidate:	
	Duration of Appointment	
	Time: Commitment for this Position	
	Expected Time Schedule for this Position	
3	**Title of Position: Site Surveyor**	
	Name of Candidate:	
	Duration of Appointment:	
	Time: Commitment for this Position:	
	Expected Time Schedule for this Position:	
4.	**Title of Position: General Foreman**	
	Name of Candidate:	
	Duration of Appointment	
	Time: Commitment for this Position	
	Expected Time Schedule for this Position	

Countersignature of authorized representative of the Tenderer:

Signature: …….

Date (day month year): ……

Form PER-2: Resume and Declaration – Key Personnel

(Resume to be provided in this format)

Name of Tenderer: HQ STAFF		
Position: [*Title of Position from form PER -1]*		
Personnel Information	Name	Date of Birth
	Address:	Email:
	Professional Qualifications	
	Academic Qualifications	
	Language Proficiency: *[Language and level of speaking, reading and writing skills]*	
Details	Address of Procuring Entity:	
	Telephone	Years with present procuring Entity: ……. Contact (Manager/Personnel officer): …….
	Fax:	
	Job Title:	

Summarize professional experience in reverse chronological order. Indicate particular technical and managerial experience relevant to the project.

Project	Role	Duration of Involvement	Relevant Experience

Declaration

I, the under signed [insert either "Contractor's Representative" or "Key Personnel" as applicable], certify that to the Lowest of my knowledge and belief, the information contained in this Form PER-2 correctly describes myself, my qualifications and my experience.

I confirm that I am available as certified in the following table and throughout the expected time schedule for this position as provided in the Tender:

Commitments	Details
Commitment to Duration of contract	Insert period (start and end date) *[insert period (start and end dates) for which this Contractor's Representative or Key Personnel is available to work on this contract]*
Time Commitment	Insert period (start and end date) *[insert period (start and end dates) for which this Contractor's Representative or Key Personnel is available to work on this contract]*

I understand that any misrepresentation or omission in this Form may:

a) be taken into consideration during Tender evaluation;
b) result in my disqualification from participating in the Tender;
c) result in my dismissal from the contract.

Name of Contractor's Representative or Key Personnel: [*insert name*]

Signature: Date: (day month year):

Countersignature of authorized representative of the Tenderer:

Signature: Date: (day month year):

(Resume to be provided in this format)

Name of Tenderer: Site Agent		
Position: [*Title of Position from form PER -1]*		
Personnel Information	Name	Date of Birth
	Address:	Email:
	Professional Qualifications	
	Academic Qualifications	
	Language Proficiency: *[Language and level of speaking, reading and writing skills]*	
Details	Address of Procuring Entity:	
	Telephone	Years with present procuring Entity: ……. Contact (Manager/Personnel officer): …….
	Fax:	
	Job Title:	

Summarize professional experience in reverse chronological order. Indicate particular technical and managerial experience relevant to the project.

Project	Role	Duration of Involvement	Relevant Experience

Declaration

I, the under signed [insert either "Contractor's Representative" or "Key Personnel" as applicable], certify that to the Lowest of my knowledge and belief, the information contained in this Form PER-2 correctly describes myself, my qualifications and my experience.

I confirm that I am available as certified in the following table and throughout the expected time schedule for this position as provided in the Tender:

Commitments	Details
Commitment to Duration of contract	Insert period (start and end date) *[insert period (start and end dates) for which this Contractor's Representative or Key Personnel is available to work on this contract]*
Time Commitment	Insert period (start and end date) *[insert period (start and end dates) for which this Contractor's Representative or Key Personnel is available to work on this contract]*

I understand that any misrepresentation or omission in this Form may:

a) be taken into consideration during Tender evaluation;
b) result in my disqualification from participating in the Tender;
c) result in my dismissal from the contract.

Name of Contractor's Representative or Key Personnel: [*insert name*]

Signature: Date: (day month year):

Countersignature of authorized representative of the Tenderer:

Signature: Date: (day month year):

(Resume to be provided in this format)

Name of Tenderer: Site Surveyor		
Position: [*Title of Position from form PER -1]*		
Personnel Information	Name	Date of Birth
	Address:	Email:
	Professional Qualifications	
	Academic Qualifications	
	Language Proficiency: *[Language and level of speaking, reading and writing skills]*	
Details	Address of Procuring Entity:	
	Telephone	Years with present procuring Entity: ……. Contact (Manager/Personnel officer): …….
	Fax:	
	Job Title:	

Summarize professional experience in reverse chronological order. Indicate particular technical and managerial experience relevant to the project.

Project	Role	Duration of Involvement	Relevant Experience

Declaration

I, the under signed [insert either "Contractor's Representative" or "Key Personnel" as applicable], certify that to the Lowest of my knowledge and belief, the information contained in this Form PER-2 correctly describes myself, my qualifications and my experience.

I confirm that I am available as certified in the following table and throughout the expected time schedule for this position as provided in the Tender:

Commitments	Details
Commitment to Duration of contract	Insert period (start and end date) *[insert period (start and end dates) for which this Contractor's Representative or Key Personnel is available to work on this contract]*
Time Commitment	Insert period (start and end date) *[insert period (start and end dates) for which this Contractor's Representative or Key Personnel is available to work on this contract]*

I understand that any misrepresentation or omission in this Form may:

a) be taken into consideration during Tender evaluation;
b) result in my disqualification from participating in the Tender;
c) result in my dismissal from the contract.

Name of Contractor's Representative or Key Personnel: [*insert name*]

Signature: Date: (day month year):

Countersignature of authorized representative of the Tenderer:

Signature: Date: (day month year):

(Resume to be provided in this format)

Name of Tenderer: GENERAL FOREMAN		
Position: [*Title of Position from form PER -1]*		
Personnel Information	Name	Date of Birth
	Address:	Email:
	Professional Qualifications	
	Academic Qualifications	
	Language Proficiency: *[Language and level of speaking, reading and writing skills]*	
Details	Address of Procuring Entity:	
	Telephone	Years with present procuring Entity: ……. Contact (Manager/Personnel officer): …….
	Fax:	
	Job Title:	

Summarize professional experience in reverse chronological order. Indicate particular technical and managerial experience relevant to the project.

Project	Role	Duration of Involvement	Relevant Experience

Declaration

I, the under signed [insert either "Contractor's Representative" or "Key Personnel" as applicable], certify that to the Lowest of my knowledge and belief, the information contained in this Form PER-2 correctly describes myself, my qualifications and my experience.

I confirm that I am available as certified in the following table and throughout the expected time schedule for this position as provided in the Tender:

Commitments	Details
Commitment to Duration of contract	Insert period (start and end date) *[insert period (start and end dates) for which this Contractor's Representative or Key Personnel is available to work on this contract]*
Time Commitment	Insert period (start and end date) *[insert period (start and end dates) for which this Contractor's Representative or Key Personnel is available to work on this contract]*

I understand that any misrepresentation or omission in this Form may:

a) be taken into consideration during Tender evaluation;
b) result in my disqualification from participating in the Tender;
c) result in my dismissal from the contract.

Name of Contractor's Representative or Key Personnel: [*insert name*]

Signature: Date: (day month year):

Countersignature of authorized representative of the Tenderer:

Signature: Date: (day month year):

Schedule D: Initial Proposed Programme of Works

[Insert proposed Resourced Programme of works including net Cash Flow Projection and Mobilization Schedule during the Contract Period]

Schedule E: Contractor's Equipment Form EQU

The Tenderer shall provide adequate information to demonstrate clearly that it has the capability to meet the requirements for the key equipment listed in Section III, Evaluation and Qualification Criteria.

Tenderers shall indicate the number of equipment to be made available for the Contract including whether they own the equipment or they shall hire as indicated below.

Item No.	Equipment Details	*Minimum Number Required for the Contract Execution	No. of Equipment to be made available for the Contract by the Bidder (Indicate whether owned or to be hired)
A	**Bituminous plant and equipment**		
	Asphalt Concrete Plant	..	
	Bitumen Pressure distributor	1	
	Asphalt concrete paver	1	
	Subtotal for A	2	
B	**Compactors**		
	Vibrating compaction plate 300 mm wide	..	
	Vibrating compaction plate 600 mm wide	..	
	Subtotal for B	..	
C	**Concrete Equipment**		
	Mobile concrete mixers	1	
	Concrete vibrators	1	
	Subtotal for C	2	
D	**Transport (Tippers, dumpers, water tankers)**	..	
	4X2 tippers payload 7 – 12 tonnes	..	
	6X4 tippers payload 16 – 20 tonnes	4	
	8X4 tippers payload 16 – 20 tonnes	..	
	Flatbed lorries	1	
	Water tankers (18,000 – 20,000 litres capacity)	5	
	Subtotal for D – tippers & dumpers		
E	**Earth – Moving Equipment**		
	Wheeled loader	1	
	Motor graders (93 - 205kW)	1	
	Trench excavator	..	
	Subtotal for E	2	
F	**Excavators**		
	Hydraulic crawler mounted (7 – 10 tonnes) – 0.25 – 0.4 m3 SAE bucket.	..	
	Hydraulic crawler mounted (10 – 16 tonnes) – 0.40 – 0.60 m3 SAE bucket.	1	
	Hydraulic wheel mounted (7 – 10 tonnes) – 0.25 – 0.4 m3 SAE bucket.	..	
	Hydraulic wheel mounted (10 – 16 tonnes) – 0.40 – 0.6 m3 SAE bucket.	..	
	Hydraulic wheel mounted backloader (7 – 10 tonnes) – 0.25 – 0.4 m3 SAE bucket.	..	

Item No.	Equipment Details	*Minimum Number Required for the Contract Execution	No. of Equipment to be made available for the Contract by the Bidder (Indicate whether owned or to be hired)
	Pulverised Mixer	..	
	Subtotal for F	1	
G	**Rollers**		
	Self-propelled single drum vibrating (various types)	1	
	Self-propelled double drum vibrating roller	1	
	Pedestrian Roller	1	
	Pneumatic rubber tyre (1-2 tonnes/wheel)	1	
	Sheep's foot roller	1	
	Subtotal for G	5	

A separate Form shall be prepared for each item of equipment listed, or for alternative equipment proposed by the Tenderer.

Equipment Information and current status for equipment leased from Government Agencies may be omitted.

<table>
<tr><td colspan="3">Item of Equipment</td></tr>
<tr><td rowspan="2">Equipment

Information</td><td>Name of Manufacturer:
……..</td><td>Model and power rating:
……..</td></tr>
<tr><td>Capacity:
……..</td><td>Year of Manufacture:
…….</td></tr>
<tr><td rowspan="2">Current Status</td><td colspan="2">Current Status:……..</td></tr>
<tr><td colspan="2">Details of Current Commitments:……..</td></tr>
<tr><td>Source</td><td colspan="2">Indicate Source of the Equipment

Owned ☐ Rented ☐ Leased ☐ Specially Manufactured ☐</td></tr>
<tr><td rowspan="4">Owner</td><td colspan="2">Name of owner :</td></tr>
<tr><td colspan="2">Address of Owner:</td></tr>
<tr><td>Telephone :</td><td>Contact Name and Title:</td></tr>
<tr><td>Fax:</td><td>Telex:</td></tr>
<tr><td>Agreement</td><td colspan="2">Details of Rental/Lease/Manufacture Agreement specific to the project</td></tr>
<tr><td></td><td></td><td></td></tr>
<tr><td></td><td></td><td></td></tr>
</table>

Schedule F: Derivation of Rates

(Sample Copy for Guidance)

Form for Detailed Breakdown of Cost Comparison

Bill Item No.	16-80-002
Bill Item Description	Provide, lay and compact asphalt concrete type II wearing coarse
Unit of Bill Item	m^3
Quantity of Bill Item	654.00

(Assumed production of 160 m^3 per day)

Rate Build Up

a) Direct Cost (DC)

i. Unit Work Price

1. Material Cost

Description	Unit	Quantity	Market Price	Amount
AC Type II	m^3	1	20900.00	20900.00
Sub Total for Material				**20900.00**

2. Labour Price

Personnel	No. Required	Rate / Day	Amount
Skilled labour overseer	2	1800.00	22.50
Skilled labour operator	6	2045.00	76.69
Artisan Grade II	12	1612.00	120.90
Unskilled labour	15	873.00	81.84
Sub Total for Labour			**301.93**
Productivity Ratio			

3. Machinery

Machinery Type	No. Required	Rate / Day	Amount	Hired / Owned
Drum Roller	1	38720.00	242.00	Hired
Pneumatic Roller	1	29200.00	182.50	Hired
Air Compressor	1	9625.00	60.16	Hired
Bitumen Sprayer Hand Operated	1	4400.00	27.50	Hired
AC Paver	1	50504.00	315.65	Hired
Sub Total for Machinery			**827.81**	
Productivity Ratio				

Sub-Total of Unit Price	
Sum (1+2+3)	22,029.74
ii. Haulage Cost	1,104.49
Sub-Total of DC	23,134.23
b) Indirect Cost	2,313.42
c) Overheads and Profits	6,940.27
Total Cost Sum (a+b+c) Carried forward to the BoQ	32,387.92

Schedule F: Derivation of Rates (Continued)

(For use during Tender Evaluation)

Form for Detailed Breakdown of Cost Comparison

Bill Item No.	
Bill Item Description	
Unit of Bill Item	
Quantity of Bill Item	

Rate Build Up

a) Direct Cost (DC) i. Unit Work Price

1. Material Cost

Description	Unit	Quantity	Market Price	Amount
Sub Total for Material				

2. Labour Price

Personnel	No. Required	Rate / Day	Amount
Sub Total for Labour			
Productivity Ratio			

3. Machinery

Machinery Type	No. Required	Rate / Day	Amount	Hired / Owned
Sub Total for Machinery				
Productivity Ratio				

Sub-Total of Unit Price	
Sum (1+2+3)	
ii. Haulage Cost	
Sub-Total of DC	
b) Indirect Cost	
c) Overheads and Profits	
Total Cost Sum (a+b+c) Carried forward to the BoQ	

Notes:

• Attach current (at least 30 days before tender opening date) proof of cost of materials e.g. Proforma invoices/quotations.

• This form has been based on the principles of Cost Estimation Manual. The Cost Estimation Manual can be downloaded from the following website: https://krb.go.ke/downloads

I certify that the above information is correct

…… ……. ……..

(Title) (Signature) (Date & Official Stamp)

Schedule G: Materials Basic Rates & Weightings for Price Adjustments

Part I: Schedule of Materials Basic Prices

(Ref: Conditions Of Contract)

Item No.	Description	Country of Origin	Name of Supplier	unit	Unit Price Kshs.
1.	Cut-back Bitumen MC 30 in bulk			Litre	
2.	Cut-back Bitumen MC 30 in drums			Litre	
3.	Bitumen 80/100 in bulk			Kg	
4.	Bitumen 80/100 in drums			Kg	
5.	Bitumen Emulsion K1-60 in bulk			Litre	
6.	Bitumen Emulsion K1-60 in drums			Litre	
7.	Cut-back Bitumen MC 70 in bulk			Litre	
8.	Cut-back Bitumen MC 70 in drums			Litre	
9.	Petrol, Regular Grade			Litre	
10.	Petrol, Premium/ super Grade			Litre	
11.	Automotive Diesel Fuel			Litre	
12.	Industrial Diesel Oil			Litre	
13.	Kerosene Fuel			Litre	
14.	Cement			Tonne	
15.	Flex beam Guardrail			Metre	
16.	Gabion Mesh			M^2	
17.	Reinforcing Steel			Tonne	
18.	Lime			Tonne	

I certify that the above information is correct.

…… …… ……

(Title) *(Signature)* *(Date)*

The prices inserted above shall be those prevailing 28 days before the submission of Bids and shall be quoted in Kenya Shillings using the exchange rates specified in the Appendix to Form of Tender

Prices of imported materials to be quoted CIF Mombasa or Nairobi, as appropriate, depending on whether materials are imported by the Bidder directly or through a local agent.

Transportation costs for imported materials to be quoted from Mombasa or Nairobi as appropriate to mid-point of ……..depending on whether materials are imported directly by the Bidder or through a local agent.

Bidders SHALL attach confirmation of prices from the Supplier

Part II: Approximate Weightings for Price Adjustment

Description of Index	*% Range of Weighting* [a]
(a) Fixed ("A")	8
(b) Labour	10-15
(c) Fuels and Lubricants	15-25
(d) Equipment and Spares	15-25
(e) Cement	10-15
(f) Reinforcement and Steel products	5-10
(g) Explosives	1 – 5
(h) Bitumen and Bituminous products	15 – 18
Total	100

NOTE: [a] This should be used as guidance to bidders and for purpose of checking their submissions, the Employer has estimated and provided a range of acceptable weightings for related major construction inputs in accordance with the potential range of construction methodologies, based on estimated cost in a common currency.

Table B: Bidder's proposed weighting

Index Code	*Index Description*	*Source of Index*	*Base value and date*	*Bidder's proposed weighting*
	Non adjustable	Civil Engineering Cost Indices from Kenya National Bureau of Statistics. For equipment & spares, the official indices from source country shall apply	The Indices prevailing at 28days before tender submission deadline shall apply	a:_____ b: _____ c: _____ d: _____ e: _____ f: _____ g: _____ h: _____
			Total	1.00

Signature of Bidder……..……Date ……

(Failure to sign this shedule will imply the bidder doesn't accept the above conditions and hence disqualified)

PART 2 ~ WORKS' REQUIREMENTS

SECTION V ~ BILLS OF QUANTITIES

PREAMBLE

1. The Bill of Quantities shall form part of the Contract documents and is to be read in conjunction with Instructions to Bid, Conditions of Contract, Specifications and Drawings.

2. The brief description of the items in the Bill of Quantities is purely for the purpose of identification, and in no way modifies or supersedes the detailed description given in the Conditions of Contract and specification for the full direction and description of work and materials.

3. The Quantities set forth in the Bill of Quantities are estimated and provisional representing substantially the work to be carried out and given to provide a common basic for bidding and comparing the bids. There is no guarantee to the Contractor that he will be required to carry out all the quantities of work indicated under any one particular item or group of items in the Bill of Quantities. The basic of payment shall be the Contractor's rates and the quantities of work actually done in fulfilment of his obligation under the Contract.

4. The basic rates for labor, materials and equipment under dayworks shall cover all direct costs to the Contractor, including (but not limited to) the amount of wages paid to such labor, transportation time, overtime, subsistence allowances, Contractor's profit, overheads, superintendence, liabilities, and insurances and allowances to labor, time keeping, and clerical and office work, the use of consumable stores, water, lighting, and power; the use and repair of stagings, scaffolding, workshops, and stores, portable power tools, manual plant, and tools; supervision by the Contractor's staff, foremen, and other supervisory personnel; and charges incidental to the fore going and any sums paid to or on behalf of such labor for social benefits in accordance with Kenyan law.

5. The basic rates under dayworks will be payable in local currency only.

6. In calculating payments due to the Contractor for the execution of day work, the hours for labor will be reckoned from the time of arrival of the labor at the job site to execute the particular item of day work to the time of return to the original place of departure, but excluding meal breaks and rest periods.

7. Only the time of classes of labor directly doing work ordered by the Engineer and for which they are competent to perform will be measured. The time of gangs (charge hands) actually doing work with the gangs will also be measured but not the time of foremen or other supervisory personnel.

8. The prices and rates inserted in the Bill of Quantities will be used for valuation of the work executed and the Engineer will measure the whole of the works executed in accordance with this Contract.

9. A price or rate shall be entered in link against every item in the Bill of Quantities with the exception of items which already have provisional sums affixed thereto. The bidders are reminded that no "nil" or "included" rates or "lump-sum" discounts will be accepted.

10. Provisional Sums (including Dayworks) in the Bill of Quantities shall be expended in whole or part at the discretion of the Engineer in accordance with Subclause 52.4 and Clause 58 of the Conditions of Contract.

11. The price and rates entered in the Bill of Quantities shall, except insofar as it is otherwise provided in the Contract , include all constructional plants to be used, labour, insurance, supervision, compliance, testing, materials, erection, maintenance of works overhead and profit, taxes and duties together with the general risks, liabilities and obligations set out or implied in the Contract , transport, electricity and telephone, water, use and replenishment of all consumables, including those required under the Contract by the Engineer and his staff.

12. Work shall not be executed on a day work basis except by written order of the Engineer.

13. The Bill of Quantities, unless otherwise expressly stated therein, shall be deemed to have been prepared in accordance with the principle of the latest edition of the Civil Engineering Standard Method of Measurement (CESMM)

14. "Authorised" "Directed "or "Approved" shall mean the authority, direction or approval of the Engineer.

15. Unless otherwise stated, all measurement shall be net on the finished work carried out in accordance with the details shown on the drawings or instructed, with no allowance for extra cuts or fills, waste or additional thickness necessary to obtain the minimum finished thickness or dimensions required in this Contract. Any work performed in excess of the requirements of the plans and specifications will not be paid for, unless ordered in writing by the Engineer.

16. Hard/rock materials in this Contract, shall be defined as the material which, in the opinion of the Engineer, require blasting, or the use of metal wedges and sledge hammers, or the use of compressed air drilling for their removal, and which cannot be extracted by ripping with a dozer tractor of at least 150 brake horse power (112 kilowatt) with a single rear–mounted hydraulic ripper Boulders of more than 0.2 m^3 occurring in soft materials shall be classified as hard material

17. The whole cost of complying with the provisions of the Contract shall be included in the Items provided in the priced Bills of Quantities, and where no Items are provided, the cost shall be deemed to be distributed among the rates and prices entered for the related Items of Work.

18. General directions and descriptions of work and materials are not necessarily repeated nor summarized in the Bills of Quantities. References to the relevant sections of the Contract documentation shall be made before entering prices against each item in the priced Bills of Quantities.

19. The units of measurement and abbreviations tabulated below are used herein:

Unit	Abbreviation
Number	№
Millimetre	mm
Square millimetre	mm^2 / sq mm
Metre	m
Square metre	m^2 / sq m
Cubic metre	m^3 / cu m
Hectare	ha
Kilogramme	kg
Lump sum	LS
Prime Cost	PC
Tonne	Tonne
Metric ton (1000 kg)	t / tonne
Degrees centigrade	^oC
Hour	h / hr
Week	wk
Month	mth
Horsepower	HP
Kilowatt	KW

BUTERE TOWN ROADS PHASE 1					
Activity Code	**Activity Decsription**	**Unit**	**Quantity**	**Planned Rate (Ksh)**	**Amount (Ksh)**
Bill 1	**Preliminary and General Items**				
01.80.010	Allow a prime cost of sum for material testing as directed by the Engineer	PC SUM	250,000.00	1	**250,000.00**
01.80.011	Extra over item 01.80.010 for contractors overheads and profits	%	250,000.00		
01.80.026	Allow a prime cost sum for the REs miscellaneuos account	PC SUM	100,000.00	1	**100,000.00**
01.80.027	Extra over 01.80.026 for profits and overheads	%	100,000.00		
01.80.038	Provide fuel and maintain with driver, 1 No. 4WD double cabin (odometer:0 - 100000) for exclusive use by the Engineer inclusive of the first 4,000km per vehicle month in accordance with clause 138 of special specification.	Veh. Month	8		
01.80.030a	Prime cost sum for payment of allowances for Engineer's site staff (Permanent staff)	PC SUM	700,000.00	1	**700,000.00**
01.80.030b	Extra Over on Item 01.80.030a for the Contractor's Overheads and Profit.	%	700,000.00		
01.80.030	Allow a prime cost for attendance to the RE,s supervisory staff including overtime	PC SUM	700,000.00	1	**700,000.00**
01.80.031	Include percentage of PC sum in item 01.80.030 for contractors overhead and profit	%	700,000.00		
01.80.042 d	Allow for prime cost sum for survey works	PC Sum	150,000.00	1	**150,000.00**
01.80.042e	Extra Over on Item 01.80.042d for the Contractor's Overheads and Profit.	%	150,000.00		
	Total of Bill 1 Carried Forward to Summary				
Bill 4	**Site Clearance and Top Soil Stripping**				
04.60.001	Clear site on road reserve mechanically by removal of trees, hedges, bushes, vegetation and other deleterious materials.	m2	6,000.00		

04.80.002	Remove topsoil to a maximum depth of 200mm.	M^3	2,000.00		
04.60.005	Excavate, remove and dispose pipe culverts of any size.	M	20.00		
	Total of Bill 4 Carried Forward to Summary				

Bill 5	**Earthworks**				
05.50.006	Fill in soft Material and compact	M^3	2,700.00		
05.50.008	Cut to spoil in soft	M^3	4,500.00		
05-60-005	Compaction of top 150mm below formation in cuts and fills	M^3	1,500.00		
05-50-003	Scarify and compact existing ground to at least 95% MDD to a depth of 150mm	M^3	675.00		
05.50.012	Provide and place rock fill to swamp	M^3	100.00		
05.60.012	Benching including compaction	M^3	600.00		
	Total of Bill 5 Carried Forward to Summary				
Bill 7	**Excavation and Filling for Structures**				
07.70.001	Provide stone pitching including grouting of ratio 1:4 cement to mortar. outfall drains as detailed in the drawings or as directed by the Engineer	M^2	300.00		
	Total of Bill 7 Carried Forward to Summary				
Bill 8	**Culvert and Drainage Works**				
08.60.030	Excavation manually in soft material for culvert in any size.	M^3	224.00		
08.60.024	Provide, lay and joint pipe culvert of 600mm in diameter without surround	M	200.00		
08.60.032	Provide, place and compact class 15/20 concrete	M^3	102.00		
08.60.034	Concrete class 25/20 for apron, wingwall, headwall and drain bed	M^3	65.67		
08.60.035	A142 Fabric mesh	M^2	333.33		

08.60.033	Provide, place and compact class 20/20 concrete for bed and sleeves pipes	M^3	12.00		
08-70-036	Excavate in any material provide and joint 600x360 mm invert block drains (IBD) precast concrete channels with two precast side slabs on both sides of 600x225x75 mm as lining for backfilling with selected material as directed by the stormwater drain including bedding and Engineer.	M	1,800.00		
08.50.022	Extra over item 08.70.037 for precast side slabs of 600 x 225 x 75 mm	M^2	180.00		
	Total of Bill 8 Carried Forward to Summary				

Bill 9	**Passage of Traffic**				
09-50-004	Place warning signs, barriers and cones around the working lane, sprinkle water to control dust and guide the passage of traffic through the works	KM	1		
09.60.002	Construct and Maintain diversions for the whole contract duration	KM	1		
	Total of Bill 9 Carried Forward to Summary				
Bill 12	**Natural Material for Base and Subbase**				
12.50.003	Provide, spread, shape and compact approved natural gravel of CBR 30% and above for subbase layer.	M^3	1,485.00		
12.50.004	Provide, spread, shape and compact approved natural gravel of CBR 30% and above for base layer.	M^3	1,320.00		
	Total of Bill 12 Carried Forward to Summary				

Bill 14	**Cement and Lime Treated Material**				
14.50.001	Provide, spread cement on natural gravel	TON	73.26		
14.50.003	Mixing in cement/lime into natural gravel	M^3	1,320.00		
14.50.004	Cure and protect layers treated with cement or lime stabilizers	M^2	8,000.00		
	Total of Bill 14 Carried Forward to Summary				
Bill 15	**Bituminous Surface Treatments & Surface Dressing**				
15.50.002	Prepare surface of carriageway, bus bays and repair areas, provide and spray prime cutback bitumen as specified	LITRE	6,600.00		
15.50.003a	Prepare surface of repair areas provide and spray K1-60 bitumen emulsion as tack coat or seal to repair areas at a spray rate of 0.8-1.0 litre/m2	LITRE	5,400.00		
	Total of Bill 15 Carried Forward to Summary				
Bill 16	**Bituminous Mixes**				
16.60.001	Provide,lay and roll asphalt concrete type 1 (bitumn content 5-6% by weight) for carriageway and shoulders as directed by the Engineer.	M^3	300.00		
	Total of Bill 16 Carried Forward to Summary				

Bill 20	**Road Furniture**				
20.50.011	Speed bump construction with asphalt concrete	M^3	15.00		
20.50.011	Provide lay and joint concrete flush kerbs in support to carriageway, bus bays and junctions as specified	M	2,370.00		
20.50.012	Provide lay and joint concrete raised kerbs in support to carriageway, bus bays and junctions as specified	M	1,200.00		
20.50.006	Provide reflectorized yellow paint for road markings as specified	M^2	100.00		
20.50.007	Provide reflectorized white paint for road markings as specified	M^2	240.00		
20.70.002	Provide and erect permanent road signs	No.	12.00		
	Total of Bill 20 Carried Forward to Summary				
Bill 22	**Dayworks**				
22.50.001	Support Staff	PD	480.00		
22.50.014	Inspector	PD	240.00		
22.50.018	Assistant Engineer	PD	240.00		
	Total of Bill 22 Carried Forward to Summary				
Bill 23	**Concrete Paving Blocks**				
23.50.001	Supply, lay and compact 60mm thick pre-cast concrete paving blocks to walkway including 50mm thick sand bed	M	1,500.00		

	Total of Bill 23 Carried Forward to Summary				
Bill 25	**Cross Cutting Issues**				
25-50-028	Relocation of services	PC Sums	1	700,000.00	**700,000.00**
25.50.029a	Provide, erect, brand, maintain publicity sign and return to the Employer upon expiry of the Contract period as instructed by the Engineer	No.	1		
	Total of Bill 25 Carried Forward to Summary				

BUTERE TOWN ROADS PHASE 1		
Activity Code	Activity Decsription	Amount (Ksh)
Bill 1	Preliminary and General Items	
Bill 4	Site Clearance and Top Soil Stripping	
Bill 5	Earthworks	
Bill 7	Excavation and Filling for Structures	
Bill 8	Culvert and Drainage Works	
Bill 9	Passage of Traffic	
Bill 12	Natural Material for Base and Subbase	
Bill 14	Cement and Lime Treated Material	
Bill 15	Bituminous Surface Treatments & Surface Dressing	
Bill 16	Bituminous Mixes	
Bill 20	Road Furniture	
Bill 22	Dayworks	
Bill 23	Concrete Paving Blocks	
Bill 25	Cross Cutting Issues	
	Sub-Total 1	
	Add 16% VAT	
	Add 0.03% PCBL	
	Total Carried to Form of Tender (Kshs)	

SECTION VI - SPECIFICATIONS

SECTION VI –A: STANDARD SPECIFICATIONS

Standard Specifications refers to the Standard Specifications for Road and Bridge Construction, 1986 Edition and shall be applicable in this contract.

SECTION VI –B: SPECIAL SPECIFICATIONS

TABLE OF CONTENTS

Clause and Description Page

100 GENERAL 126

101 LOCATION AND EXTENT OF SITE 126
102 EXTENT OF CONTRACT 127
102.1 PROJECTS COMPONENTS 127
103 DRAWINGS 127
104 PROGRAMME FOR EXECUTION OF THE WORKS 127
105 ORDER OF EXECUTION OF THE WORKS 128
107 CERTIFICATE OF COMPLETION 128
108 METHOD OF CONSTRUCTION 128
109 NOTICE OF OPERATIONS 128
109.2 NOTIFICATION TERMS 128
117 HEALTH, SAFETY AND ACCIDENTS 128
119 USE OF EXPLOSIVES 129
120 PROTECTIONS OF EXISTING WORKS AND SERVICES 129
121 DIVERSION OF SERVICES 129
123 LIAISON WITH GOVERNMENT OFFICIALS AND POLICE 130
124 PROVISION OF LAND 130
125 WATER SUPPLY 130
127 INFORMATION FROM EXPLORATORY BORING AND TEST PITS 130
131 SIGNBOARDS 131
132.1 HOUSING AND ACCOMMODATION FOR THE EMPLOYER'S REPRESENTATIVE'S SITE STAFF 131
DESIGNATION 132
NUMBER 132
RESIDENT ENGINEER 132
1 132
ASSISTANT RESIDENT ENGINEER 132
1 ..... ERROR! BOOKMARK NOT DEFINED.
SURVEYOR 132
1 ..... ERROR! BOOKMARK NOT DEFINED.
MATERIALS TECHNOLOGIST 132
1 ..... ERROR! BOOKMARK NOT DEFINED.
ROADS/BRIDGE INSPECTOR 132
2 ..... ERROR! BOOKMARK NOT DEFINED.
GRADUATE/ASSISTANT ENGINEERS 132
4 ..... ERROR! BOOKMARK NOT DEFINED.
ASSISTANT INSPECTORS/TECHNICIANS 132
4 ..... ERROR! BOOKMARK NOT DEFINED.
SECRETARY/OFFICE ASSISTANT 132
2 ..... ERROR! BOOKMARK NOT DEFINED.
LEVELLER 132
1 ..... ERROR! BOOKMARK NOT DEFINED.
CHAINMEN/LABOURERS 132
8 ..... ERROR! BOOKMARK NOT DEFINED.
132.2 ENGINEER'S REPRESENTATIVE OFFICE 132
132.2A ..... ENGINEER'S OFFICE AND LABORATORY FURNITURE 132
132.3 ENGINEER'S LABORATORY AND SURVEY EQUIPMENT 139
132.9 WIRELESS COMMUNICATION FOR THE ENGINEER 140
137 ATTENDANCE UPON THE ENGINEER AND HIS STAFF 140
137.1 STAFF EMPLOYED AND PAID BY THE CONTRACTOR FOR ATTENDANCE UPON THE ENGINEER . 140
138 PROVISION OF VEHICLES 141
139 MISCELLANEOUS ACCOUNTS 141
140 PAYMENT OF OVERTIME FOR ENGINEER'S JUNIOR STAFF 142

141 Measurement and Payment 142
142 Liquidated Damages 142
143 Protection of the Environment 142
144 Off Road Environmental Measures 144
145 Staff Training 144

200 MATERIALS AND TESTING OF MATERIALS 145

205 Soils and Gravels 145
211 Bituminous Binders 145

300 SETTING OUT AND TOLERANCES 146

301 Setting Out 146

400 SITE CLEARANCE AND TOP SOIL STRIPPING 147

401 Site Clearance 147

500 EARTHWORKS 148

502 General 148
502.2 Definitions for Earthworks 148
504 Preparation Prior to Forming Embankments 148
504.2 Benching 148
504.3 Ground Compaction 148
505 Construction of Embankments 148
507.2 Rockfill in Carriageway, Embankment and Behind Structures 149
508 Compaction of Earthworks 150
509 Mass Haul Diagram 150
511 Borrow Pits 150
514 Top Soiling and Grassing 150
514.2 Hydro-seeding 151
514.3 Application of Chemical Fertilizers 151
515 Side drains 151
517 Measurement and payment 151

600 QUARRIES, BORROW PITS, STOCKPILE AND SPOIL AREAS 152

601 General 152
602 Definitions 152

700 EXCAVATION AND FILLING FOR STRUCTURES 153

703 Excavation of foundations for structures 153
703.1 Preparation of Foundation and Approval 153
703A Erosion Protection Works at Upstream and Downstream of Culverts/Bridges 153
703A.1 Scope 153
703A.2 Materials 153
703A.3 Construction Operations 153
707 Backfilling of Excavations and Filling for structures 154
708 Protection of Structures 154
709 Excavations for River Training and New Watercourses 154
710 Stone Pitching 154

800 CULVERT AND DRAINAGE WORKS 155

804 Excavation for Culverts and Drainage Works 155
805 Excavation in Hard Material 155
809 Bedding and Laying of Pipe Culverts 155
810 Jointing Concrete Pipes 155
812 Backfill 155
816 Minor Drainage Structures 155
817 Mitre Drains, Cut-off Drains, Catch Water/Drains, Outfall Drains and Earth Dams 156
817.2 Cleaning Existing Drains 156
817.3 Cleaning of Hydraulic Structures 156
817.4 Removal of Existing Pipes, Inlet and Outlet Structures 156

817.5 Extension of Existing Pipes 156
817.6 Chute drain for High Embankment Sections 156
817.7 Stone Masonry and Concrete Paving 157
819.1 Repair of Drainage Spouts 159
820 Measurement and Payments for Additional Items 160
821 Cement Mortared Stone Masonry Walls 161
822 Subsoil Filter Drains 162
823 Gulley Pots and Chambers 162
824 Pedestrian Crossings 162
825 Measurement and Payment for Further Additional Items 162
826 Concrete and Cement Strength 163

900 PASSAGE OF TRAFFIC 164

903 Maintenance of Existing Road 164
903.1 Maintenance of Right of Way 164
904 Construction of Deviations 164
906 Passage of Traffic through the Works 164
912 Measurement and payment 165

1100 SHOULDERS AND FOOTPATHS 166

1107 Footpaths 166
1107.1 ..... Pre-cast Concrete Paving Blocks 166
1107.2 ..... Flexible Surfacing for Footpaths and other Paved Areas 166
1108 Measurement and Pavement 166
1203 HAND PACKED STONE 167
1204 MATERIAL REQUIREMENTS 168

1300 GRADED CRUSHED STONE SUBBBASE 169

1303 Material requirements 169
1306 Laying and Compacting Graded Crushed Stone Sub-base 169
1311 In Situ Reprocessing of Graded Crushed Stone 169

1400 CEMENT TREATED MATERIALS 170

1403 Cement Treatment 170

14A LEAN CONCRETE 170

14A/04 ..... Mix Requirements 170
14A/05 ..... Method of Construction 170
14A/08 ..... Measurements and payment 170

1500 BITUMINOUS SURFACE TREATMENTS AND SURFACE DRESSING 171

1502B Materials for Prime Coat and Tack Coat 171
1504B Spraying of Prime Coat and Tack Coat 171
1502C Materials for Surface Dressing 171
1503C Rate of Application of Binder and Chippings 171
1505C Pre-coated chippings 171
1508C Application of Surface Dressing 172
1509C Aftercare and Control of Traffic 172
1511C Measurement and Payment 172

1600 BITUMINOUS MIX BASES, BINDER COURSES AND WEARING COURSES 173

1600A GENERAL 173
1603A Construction Plant 173
1606A Site trials 173
1607A Mixing of Aggregates and Bitumen 173
1608A Transporting the Mixture 174
1609A Laying the Mixture 174
1610A Compaction 174
1611A Finishing Joints and Edges 174
1614A Tolerances 175

1600B ASPHALT CONCRETE FOR SURFACING 175
1602B MATERIALS FOR ASPHALT CONCRETE 175
1603B GRADING REQUIREMENTS 177
1604B REQUIREMENTS FOR ASPHALT CONCRETE 178
1605B MIXING AND LAYING ASPHALT CONCRETE 179
1606B COMPACTION 179
1608B SEALING BITUMINOUS SURFACE 179

1700 CONCRETE WORKS 181

1703 MATERIALS FOR CONCRETE 182
1703A LEVELLING OF CONCRETE FOR BOTTOM SLAB INCLUDING FORMWORK COST 183
1703B REINFORCEMENT BARS FOR WALLS AND SLABS 184
1703C FORMWORK FOR VERTICAL WALLS AND SLABS 186
1703D CONCRETE WORKS TO VERTICAL WALLS AND SLABS 187
1704 CONCRETE WORKS OF THE BEAMS AND DECK SLABS 190
1704.1 ..... DESCRIPTION 190
1704.2 ..... CONCRETE MATERIALS 190
1704.2.1 CONCRETE CLASS 30/20 191
1704.2.2 PROPORTIONING CONCRETE 192
1704.2.3 CONCRETING WORK 192
1704.3 ..... CONCRETE CLASS 35/20 193
1704.4 ..... MEASUREMENT AND PAYMENT 193
1705 MIXING CONCRETE 193
1740.2 ..... INTERLOCKING CONCRETE PAVING BLOCK 193
1741 MEASUREMENT AND PAYMENT 194
1742 PLANT AND EQUIPMENT FOR AGGREGATES AND CONCRETE 195
1742.1 ..... AGGREGATE PROCESSING PLANT 195
1742.2 ..... CONCRETE PLANT 196

1900 STRUCTURAL STEELWORK 199

1901 GENERAL 199

2000 ROAD FURNITURE 200

2001 ROAD RESERVE BOUNDARY POSTS 200
2004 PERMANENT ROAD SIGNS 200
2004.1 ..... POSTS AND ROAD SIGNS 200
2004.2 ..... COLOUR AND CONFIGURATION 200
2004.3 ..... MATERIAL 200
2004.4 ..... STRUCTURAL DETAILS 201
2004.5 ..... RETRO-REFLECTIVE SHEETING 201
2004.6 ..... MESSAGES AND BORDERS 202
2004.7 ..... COLOUR 202
2004.8 ..... ADHESIVES 202
2004.9 ..... FABRICATION 202
2004.10 ..... WARRANTY AND DURABILITY 203
2004.11 ..... INSTALLATION 203
2004.12 ..... FOUNDATION FOR SUPPORT 203
2004.13 ..... MEASUREMENT FOR PAYMENT 204
2004.14 ..... RATE 204
2005 ROAD MARKING 204
2006 GUARDRAILS 204
2006.1 ..... REMOVING, RENOVATING AND RE-ERECTING GUARDRAILS 204
2006.2 ..... PEDESTRIAN RAILING 205
2007 KERBS 205
2007.2 ..... EXISTING KERBS 205
2007.3 ..... REPAIR OF DAMAGED RAILING AND KERBS 205
2010 TREES 206
2010.1 ..... PLANTATION OF TREES AND HEDGES 206
2012 SERVICE DUCTS BENEATH ROADS 208

2013 Duct Markers 208
2014 Road Bump and Rumble Strips 208
2015 Bollards 208
Where shown on the Drawings or instructed by the Engineer, the Contractor shall construct permanent bollards. The bollards shall be gauge 16 steel pipe Bollards of diameter minimum 150mm and 1.0 m above the ground, embedded to a depth of 0.5m at place. The bollards shall be filled using a minimum class (15/20) concrete and as shown on the Drawings. 209
2016 Retro-Reflective Road Studs 209
2017 Measurement and Payment 209

2100 MISCALLANEOUS BRIDGE WORKS 211

2200 DAY WORKS 212

2201 Scope 212
2202 Standards 212
2203 Measurement and Payments 212

2300 PAVING BLOCKS 213

Pre-cast Concrete Paving Blocks 213
2301 Measurement and Payment 213
The quantity to be paid will be measured by volume in m^2 213

2500 ENVIRONMENTAL MANAGEMENT PLAN 213

2500 HIV/AIDS, GENDER, SOCIAL ISSUES AND LOCAL PARTICIPATION ERROR! BOOKMARK NOT DEFINED.

2501 Scope 225
2502 Interpretation and Documentation 225
2503 HIV/AIDS Awareness Campaign 225
2504 AIDS Prevention Campaign 225
2505 HIV/AIDS Training 225
2505.1 ..... Objective 225
2505.2 ..... Scope of activities 225
2505.3 ..... Collaboration 226
2505.4 ..... Contractor's Responsibilities 227
2505.5 ..... Inputs 227
2505.6 ..... Reporting 227
2506 Timing 227
2507 Measurement and Payment 227

Special Specification is supplementary to the Standard Specification and the two must be read in conjunction. In any case where there appears to be conflict between the two then the Special Specifications will take precedence.

In the absence of any definite provisions on any particular issue in the aforesaid Specifications, reference may be made to the latest codes and specifications of Design Manual for Roads and Bridges of the Ministry of Transport and communication of the Republic of Kenya, Kenya Bureau of Standards (KeBS), BS, ASTM, AASHTO and in that order. Where even these are silent, the construction and completion of the works shall conform to sound engineering practice as approved by the Engineer and in case of any dispute arising out of the interpretation of the above, the decision of the Engineer shall be final and binding on the Contractor.

Where reference is made in the Contract to specific standards codes to be met by the materials, plant, and other supplies to be furnished, and work performed or tested, the provisions of the latest current edition or revision of the relevant standards as on the date of the bid and codes/design manual in effect shall apply, unless otherwise expressly stated in the contract. Where such standards and codes/design manual are national, or relate to a particular country or region, other internationally recognised standards which ensure a substantially equal or higher performance than the standards and codes/design manual specified will be accepted subject to the Engineer's prior review and written approval. The difference between the standards specified and the proposed alternative standards must be fully described in writing by the Contractor and submitted to the Engineer at least 28 days prior to the date when the Contractor desires the Engineer's approval. In the event that the Engineer determines that such proposed deviations do not ensure substantially equal performance, the Contractor shall comply with the standards specified in the documents.

101 Location and Extent of Site

The Project Roads are located in Butere Town in Kakamega County.
The existing road alignments comprises of 2 links totalling 1Km.

S/NO	Road Name	Road Length(km)
1.	Butere Safaricom Mast Road	0.36
2.	Butere Sub-County Hospital Road	0.64
	Total	**1.0**

102 Extent of Contract

The works to be executed under this Contract comprise improvement to bitumen standards of 3 link roads totalling 1km. The activities comprise mainly of but are not limited to the following:(*amend based on works requirement)*

(i) Provision of facilities to the supervising Engineers
(ii) Site clearance and top soil removal
(iii) Earthworks including pavement Construction as follows:
  (a) Cut in soft as instructed by the Engineer
  (b) Fill in soft as instructed by the Engineer
  (c) Rockfill as directed by the Engineer
  (d) Construction of 150mm subbase layer
  (e) Construction of 150mm cement or lime improved base layer as instructed by the Engineer.
  (f) Provision of 50mm thick Asphalt Concrete Type 1 as wearing course on carriageway
(iv) Drainage and protection Works
(v) Construction of walkway as directed by the Engineer
(vi) Installation of road signs
(vii) Road Furniture installation
(viii) Maintenance of passage of traffic through the works
(ix) Any other activity not listed above but may be deemed necessary and instructed by the Engineer.

103 Drawings

This clause shall be read as under:

The drawings provided for bidding purpose shall be as contained in the Bid documents. The Engineer may from time to time, in order to enable satisfactory completion of works, revise, amend, or supersede any of these drawings. It shall be the Contractor's responsibility to construct the works in conformity with the latest revision and amendment to the drawings provided that the Engineer has given the Contractor in writing such reasonable prior notices of intention to revise, amend, or supersede as the nature of the intended change required and relevant drawings have been issued to the Contractor.

104 Programme for Execution of the Works

The Contractor shall provide the works programme, required under Clause 14.1 of the Conditions of Contract, within 28 days of receipt of the Engineer's Order to commence work.

The programme shall be coordinated with climatic and other conditions to provide for the completion of the works in the order and by the time specified.

The Contractor shall carry out the Works of the Contract in accordance with the programme agreed with the Engineer, but he shall in no manner be relieved by the Engineer's approval of the programme, of his obligation to complete the works in the prescribed order and by the prescribed completion date and he shall from time to time review his progress and make such amendments to his rate of execution of the works as may be necessary to fulfil his obligations.

The Contractor shall allow in his programme for construction of trial sections and carrying out tests upon them as directed by the Engineer in accordance with the provisions of Clause 129 of the Standard Specification. The time for completion of the Contract shall not be extended because of the time taken to carry out tests and evaluate trial sections.

105 Order of Execution of the Works

In addition to Clause 105 of the Standard Specification, the Contractor shall carry out the Works such that a continuous and consecutive output of fully completed work is achieved.
Generally, the Contractor shall commence the works at the beginning of the road package and progress continuously towards the other end without leaving any isolated section or sections of road uncompleted.

107 Certificate of Completion

Wherever the "Certificate of completion" and "Period of Maintenance" are stated in the specification, these shall be read respectively as the "Taking over Certificate" and "Defects Liability Period".

The Taking-Over Certificate for these works shall be issued upon application by the Contractor under Clause 48.2 of the Conditions of Contract on substantial completion of the construction works. The Defect Liability Certificate will be issued after the end of the Defects Liability Period.

Release of Retention Money will be on issuance of the said certificates.

108 Method of construction

Add the following to this clause:

The submissions of work programme, Order of Work and the General Description of works shall be consistent in presentation and content when handed over for the Engineer's approval and in accordance with programmes and schedules as stated in Clause 14.1 of Conditions of Contract.

Notwithstanding any contrary provision contained in the last paragraph of Clause 108 of the Standard Specification, the Engineer's normal working hours shall be defined as 8:00 a.m. to 5:00 p.m. on weekdays, including lunch break from 1.00 p.m. to 2.00 p.m. and 8:00 a.m. to 1:00 p.m. on Saturdays, with Sunday being set aside as a day of rest. If the contractor wishes to execute permanent works outside these hours, he shall request for and obtain written permission from the Engineer at least one full working day in advance to enable the Engineer to make necessary provision for the supervision of such work. The contractor shall meet any costs arising thereof.

109 Notice of Operations

Name the existing text as 109.1 and add the following:

109.2 Notification Terms

It shall be the Contractor's responsibility to notify the Engineer when any items of the Works scheduled are completed and ready for approval, and the contractor shall give a notice of one full working day to allow control tests to be performed.

117 Health, Safety and Accidents

Insert Sub-clause (i):

In accordance with the laws of Kenya, the Contractor shall make arrangement for awareness programme for public health education and particularly for HIV/AIDS as detailed under Section 26 of this specification.

119 Use of Explosives

Add the following to Clause 119:

The Contractor shall not use explosives without prior written consent of the Engineer. Where the use of explosives is so provided or ordered or authorised, the Contractor shall comply with the requirements of the following beside the law of the land as applicable:

(a) The Contractor shall at all times make full liaison with and inform well in advance and obtain such permission as is required from all Government Authorities, public bodies and private parties whatsoever concerned or affected or likely to be concerned or affected by blasting operations.

(b) The Contractor shall pay all license fees and charges, which may be, required for storage of explosives or in respect of any other matters whatsoever.

(c) The contractor shall be solely responsible for provision, supply, handling, storage and transportation of all explosive ancillary materials and stores and all other things of every kind whatsoever required for blasting operations and shall not delegate or subcontract these activities without the approval of Engineer.

(d) Before the beginning of the Defects Liability Period the Contractor shall remove all unused explosives from the site on completion of the Works or which are ordered by the Engineer, and submit to the Engineer written confirmation of compliance with the instruction.

(e) The Contractor shall submit to the Engineer monthly returns detailing the quantity of explosives brought to the site together with the quantities used during the month and the location and quantity of rock blasted.

120 Protections of Existing Works and Services

Add the following to this Clause:

The cost of determining the location of the existing services together with making good or repairing of any damage caused all to the satisfaction of the Engineer shall be included in the tender rates by the Contractor.

Any damage to, or interference with, existing utilities, caused by the Contractor's operations during the progress of the Works, shall be deemed to be the responsibility of the Contractor who shall undertake to make good at his own expense any damage so caused to the existing underground utilities or other features. The Contractor shall be liable in respect of all claims arising from such damages or interference that may occur.

The Contractor shall be responsible for arranging in liaison with the relevant authorities as soon as the requirements are known for the moving of or alterations to services including power lines, telephone lines, data cables, water mains, sewers and surface water drains which are affected by the works. The arrangements for such moving or alteration shall be subject to the agreement of the Engineer and the relevant authorities.

121 Diversion of services

Add the following to the existing text:

(a) The Contractor shall acquaint himself with the position of all existing services including sewers, water pipes, underground drains, cable for electricity and telephone lines, telephone

and lighting poles before commencing any excavation or other work likely to affect these existing services.

(b) The Contractor shall pay any charges arising from the moving of such services for which Provisional Sums have been included in the Bill of Quantities. Subject to the agreement of the Engineer and upon production of receipts, the Contractor shall be reimbursed in Interim Certificates the net cost of such moving or alteration plus the percentage inserted in the Bill of Quantities for all costs and profits in making the payments.

(c) The Contractor shall be entirely responsible for and shall repair at his own cost, any services that may be damaged by his plant, equipment or personnel for not following the laid down procedure of locating and shifting services or damage that may occur subsequent to alteration of such services. The Contractor shall indemnify the Employer against claims arising from damages to existing services or works.

123 Liaison with Government Officials and Police

Add the following to the existing text:

In addition to the requirements of maintaining liaison with Government Officials and Police, the Contractor shall be responsible for acquainting himself with all current and valid ordinances or regulations which may affect the work.

The Contractor's attention is also drawn to his obligations with regard to inspection and examination of the site as stipulated under Clause 11 of the Conditions of Contract.

124 Provision of land

Notwithstanding the provisions of Clause 124 of the Standard Specification, all requirements of land for deviations, quarries, stockpiles, spoil areas and borrow pits when not in the road reserve but required for the construction purposes shall be approved by the Engineer, but the Contractor will make necessary arrangements with the property owners concerned and pay all charges arising thereof on or before completion of the Contract. However, the Employer shall not provide any land for the Quarries, stockpiles, spoil areas and borrow pits and access roads there to.

The Contractor shall remove all temporary works and shall restore all such land to the condition in which it was immediately prior to the occupation thereof as is reasonable and practicable. No separate payment shall be made to the Contractor on account of these items and the contractor shall make due allowances for them in his rates elsewhere.

Any encroachment of the road reserve, for example by kiosks, shall be brought to the Engineer's attention by the Contractor at the earliest opportunity.

125 Water Supply

Add the following to this clause:

The Contractor at his own cost shall obtain necessary permissions from both relevant Government authorities and private parties to draw water from natural sources and private sources respectively.

127 Information from Exploratory Boring and Test Pits

Delete the contents of Clause 127 and substitute with the following:

(a) The Materials Report prepared by the Employer does not form part of the bid documents. However, the report will be made available for the Contractor's verification only and any conclusions in regard to suitability of material, location of borrow pits and material quantities made by the Contractor based on this information, will be his own responsibility.

(b) The Contractor shall allow in his programme for construction of trial sections and carrying out tests upon them as directed by the Engineer. Trials would normally be required at the start of each pavement layer and if change of method or equipment deems it necessary as directed by the Engineer. The time for completion of the Contract shall not be extended because of the time needed to construct trial sections and evaluate the test on them.

At least fourteen (14) days before the work of laying any pavement layer is commenced the Contractor shall construct a trial at least 100 m in length and to the full construction width and shall be laid to the specified depth for the material. For each trial the contractor shall use the materials mix proportions, mixing, laying, compaction plants and construction procedure that he proposes to use for the main work. The main work of laying the pavement layer shall not be commenced until this trial has been tested and approved by the engineer.

No variation in the construction procedure, mix proportions, size, grading or source of any of the constituents shall be made without the agreement of the Engineer who may first require new trial sections to be carried out.

131 Signboards

Add the following to this clause:

At the commencement of works, the Contractor shall provide and erect signboards as instructed by the Engineer. The signboards shall comply with the requirements and detail shown in the Book of Drawings. Any amendments to the details in the Book of Drawings, prior to the signboards being erected, shall be with the approval of the Engineer.

132.1 Housing and Accommodation for The Employer's Representative's Site Staff

The Contractor shall be instructed by the Employer's representative to provide or rent accommodation (or give equivalent accommodation allowance) for the Resident Engineer and his/her site staff. This staff will generally comprise the following;

Designation	Number
Resident Engineer	1
Assistant Resident Engineer	1
Surveyor	1
Materials Technologist	2
Roads/Bridge Inspector	1
Graduate/Assistant Engineers	2
Assistant Inspectors/Technicians	1
Secretary/Office assistant	1
Leveller	1
Chainmen/Labourers	1

The Contractor shall provide or rent and maintain furnished houses equivalent to Types I, II, III and IV of the Ministry of Roads standards. The housing shall be separate from the Contractors' staff housing and shall be sited in a locality approved by the Resident Engineer.

132.2 Engineer's representative Office

The Contractor shall provide a furnished and equipped main office of plan area not smaller than 155 metre squares that is equivalent of the Ministry of Transport, Infrastructure, Housing, Urban Development and Public Works Standard Resident Engineer's Office. This office shall be of weatherproof construction, provided with mosquito proof and burglar-proof windows and lockable doors and suitably insulated against heat and cold, all to the satisfaction of the Engineer.

The windows shall be fitted with curtains and blinders.

The offices shall be provided with day and night watchmen and security lights, the cost of which shall be deemed to have been included in the rates for the offices.
The office for the Resident engineer shall be completely separate from that of the Contractor. Latrines and washrooms graded to staff seniority, together with a drinkable water supply and waterborne sewage disposal shall be provided for the office. The Contractor shall also provide 24 hours a day security and electricity supply to the offices and shall allow for any water and electricity consumed and for any statutory charges associated.

The main office shall revert to the Contractor at the end of the project.

The Contractor may be instructed by the Engineer under clause 58 of the General Conditions of Contract to make payments of general receipted accounts for such items as stationery, stores, furniture and equipment, claims and allowances for supervision personnel and any miscellaneous claims or the Engineer may direct the Contractor to purchase or pay for the above. The Contractor will, on provision of receipts, be paid under appropriate bill items in the BoQ.

132.2A Engineer's Office and Laboratory Furniture

Furniture and equipment for the Engineer's Laboratory shall be as listed in the Special Specifications. It shall also be the Contractor's responsibility to replenish consumables when instructed by the Engineer. The Engineer's office and laboratory furniture will revert to the Employer on completion of the contract.

The following items shall be required in the Engineer's office. On completion of the contract all furniture and equipment specified below which will have been supplied shall revert to the Employer.

[insert item required under the project]

S/No.	Engineers Office and Laboratory Furniture Description	No.
1	Executive Desk	30 No
2	Desk with lockable drawer	30 No
3	Chairs executive (swivel type)	30 No
4	Lockable steel cabinets (with 4 drawers	30 No
5	Bookshelf 2 door with drawers & shelves 2m long	30 No
6	Bookshelf 3 door with drawers & shelves 2m long	30 No
7	Stapling machine (Ofrex) and pins	30 No
8	Paper punch	30 No
9	3m tape measures	30 No
10	Scientific calculator (Fx 951MS or above)	30 No
11	Fully equipped first aid kit	30 No
12	Waste paper basket	30 No
13	Electric heater fans	30 No
14	Padlock	30 No
15	Wall clocks battery powered	30 No
16	Filling trays	30 No
17	Chairs (standard desk type)	30 No
18	Triplicate book	30 No
19	Diary	30 No
20	Inventory Book	30 No
21	Rulers	30 No
22	Hard cover note books (4quire)	30 No
23	Survey Books (Rise and Fall)	30 No
24	Field note books	30 No
25	Rims of Conqueror printing paper	30 No
26	A4 Envelops 50No. per packet	30 Pkts
27	B5 Envelops 50No. per packet	30 Pkts
28	B6 Envelops 50No. per packet	30 Pkts
29	Payment voucher books	30 No
30	Engineer's pens(Uniball)0.7mm	30 No
31	Pens (Bic Ball points) 25 in a Pkt	30 Pkts
32	Cellotape	30 No
33	Office glue stick	30 No
34	Dictionary	30 No
35	Photocopy / Printing papers (Reams)	30 No
36	Masking tape	30 No
37	Highlighters (Dozens)	30 No
38	Spring files	30 No

The contractor shall be responsible throughout the contract period for the maintenance of the office, it equipment and furniture and providing security all as specified in clauses 132 and 141 of the standard specification.

All payments for the office are subject to retention.

The contractor will be paid 50% of the cost on provision of the office complete with furniture and equipment and the remaining 50% of the cost to be spread evenly within the contract period. The cost of provision of all items under the Engineer's Office shall be deemed to have been included in the rate for provision for the Engineer's Office in the BoQ and not separate payment shall be made on the same.

The Contractor may be instructed by the Engineer under clause 58 of the General Conditions of Contract to make payments of general receipted accounts for such items as stationery, stores, furniture and equipment, claims and allowances for supervision personnel and any miscellaneous claims or the Engineer may direct the Contractor to purchase or pay for the above. The Contractor will, on provision of receipts and proof of having supplied, be paid under the same bill item as that of provision of the office. It is therefore assumed that the Contractor includes these items as listed below in his rate for provision of the Engineer's office as no separate payment shall be made.

The Contractor, when instructed, shall provide and install at the Engineer's office the Equipment specified below with a dealer's certificate and warranty:

- Multifunctional printer
- Desktop
- Laptop
- Mobile phone

(a) Digital Photocopying Machine 1No.

Make	Kyocera
Model	Specify
Copying speed	Minimum 40 cpm in A4 and minimum
Warm up time from power on	Less than 2 min
Paper size	A3 – A6
Printing speed	Minimum 40ppm in A4 and minimum
Scanning speed	Minimum 100 ipm in A4
Processor	Present 600 MHZ
Printing technology	Laser monochrome
E - filling	Present
Continuous copying	Minimum 990
Paper input capacity	150 sheet multipurpose tray 2 x 500 sheet universal paper cassette
Bypass tray	Minimum 1x100 sheets
Paper output capacity	Minimum 250 sheets
Programmable user codes	Present
Auto reverse document feeder	Present

3000 sheets finisher/sorter with 50 sheets stapler standard	Present
Interface , Ethernet	USB 2.0, 10 base T, 100 base TX
Free bundled software for network printing and scanning	Present
Memory +storage	0.9GB +150GB
Zoom	25-400 in 1% steps
First copy out	5 seconds max
Power supply	240v 50 Hz
User information display	Present
Fault diagnosis system	Present
RADF (Reverse automatic document feeder)	Present
ADU (Automatic duplex unit)	Present
Printer scanner kit	Present
Stapler finisher	Present
Saddler finisher	Present
Duty cycle	Minimum 50,000 copies per month
Resolution	600x600dpi
Repairs maintenance availability	Not less than 5 years, spares available locally
Warranty	Minimum 1 year

(b) Personal Computer (PC) 2 No.

The rate inserted for the PCs shall include for the provision of the UPS, a Printer and the software specified below for each PC.

1.	Processor & Core Logic	Core i7-7700 3.4GHz, 4 Cores
2.	System Memory	32 GB DDR4
3.	Storage Subsystem	1TB HDD
4.	Form Factor	Tower / Desktop
5.	Power System	220 – 240 V AC Power supply
6.	Display/Graphics	27" TFT Flat panel Color LCD, Same brand as CPU minimum Resolution 1024x768.
7.	Graphics Card	2 GB GDDR5 Dedicated
8.	Keyboard and Pointing Device	Enhanced keyboard & Optical Scroll mouse
9.	Audio	Stereo audio system full multimedia with speakers
10.	Communication interface	100/1000 Mbs Fast Ethernet NIC
11.	I /O interface ports	USB compatible keyboard, Serial Port, Parallel Port, USB Port, Ethernet, VGA Port
12.	Operating System	64-Bit MS Windows 10.
13.	Application Software	Microsoft Office 2016 or later.
14.	Anti-Virus	Latest Antivirus Version with media and License
15.	UPS	700VA UPS
16.	Warranty	1 year
17.	Brochure	Manufacture's Literature and Detailed Specifications (Be Attached)

<u>UPS specifications</u>

1. Rating	650 VAC (minimum)
2. Input Voltage	220-240V (minimum)
3. Output	220-240V (minimum)
4. Output frequency	50-60HZ
5. Battery module	minimum 25 minute's backup time on 50% rated a. Sealed Lead-acid b. Short recharge time (max. 5 hours for 100%)
6. Protection	Output overload Input output short-circuit

(c) Laptop 2No.

The rate inserted for the Laptop shall include for the provision of a printer and software specified below for each laptop.

ITEM	MINIMUM SPECIFICATIONS
Processor	Intel i7, 3 GHz (10th Generation)
System Memory	8GB DDR3 SDRAM 667MHz
Primary Storage	1 TB
Optical Drives	DVD+/ -RW
Display	17" screen 1024x800 resolution
AC adapter	Compliant 100-240V / 50-60Hz
Wireless LAN	Internal Wi-Fi Card & Bluetooth
Navigation	Keyboard with touchpad dual pointing device & external USB optical mouse
Audio	Std stereo speakers, built-in microphone & headphone jacks
Modem	In-built with SIM slot
LAN Network Interfaces	100 Kbps Ethernet port RJ45
Operating System	Latest Genuine Windows with license
Pre-loaded Applications	Latest MS Office Pro with license Kaspersky Antivirus with license
Carry Case	One
PC Card slots	Card reader
Battery type & life	6 cell Li-Ion battery up to 5 hrs
Salient features	2 Mega pixel Webcam 4 x 2.0 USB slots Security cable lock slot
Warranty	2years
Preferred Brand	HP
Graphics Processing Unit	NVIDIA

(d) Laser jet Printer - 1No.

Print	
1.Speed Colour	Up to 30ppm Colour Print
2.Double Sided Printing	Automatic Double Sided Printing
3.Printer Resolution	600 x 600 dpi Print
Scan	
4.Scanner Optical Resolution	300 x 300 dpi Scan
5.Scan Facility Present	Yes
6.Scanner Features	Scan to e-mail; Scan to network folder

7.	Scanner Type	Colour Flatbed
	Copy	
8.	Copier Resolution	600 x 600 dpi Copy
9.	Copier Functions	Multiple copies Up to 99
	Fax	
10.	Fax Facility Present	Yes
	Interfaces	
11.	Interface Type(s)	USB & Network
12.	LCD Screen	8.89cm Colour Touchscreen
13.	Network Interface	10/100/1000 Base-TX Network
14.	Network Ready	Yes
15.	USB Port	Yes
	System Specification	
16.	Processor	800MHz Processor
17.	Memory (Maximum)	256MB RAM
	Compatibility	
18.	Operating Systems Supported	Windows & Mac Compatible
	Media Handling	
19.	Paper Trays	3
20.	Paper Handling Input 1	100 Sheet MPT Tray
21.	Paper Handling Input 2	250 Sheet Input Tray
22.	Paper Handling Input 3	50 Sheet ADF
23.	Automatic Document Feeder	50 Sheet
24.	Media Supported	Paper envelopes, labels,
	Physical/Dimensions	
25.	Colour Printer	Yes, Colour
26.	Technology	Multifunction Laser Printer
27.	Dimensions	515mm (W) x 500mm (D) x 538mm (H)- Weight 40.8kg
28.	Power Consumption	605W (Max) / 52W (Standby) / 8.1W(Saving)
29.	Product Type	A4 Laser Printer
30.	Voltage/ Power/ Frequency	240VAC / 60Hz
	Software	
31.	Printer Languages	HP PCL 6, HP PCL 5c
32.	Software Included	Windows Installer and HP PCL 6 driver, Mac Installer
33.	USB Cable	To be included
	Warranty	
34.	Warranty	1 Year warranty

(e) Mobile Phones - 2 No.

Specifications

Technology	GSM / CDMA / HSPA / EVDO / LTE
Dimensions	162.3 x 77.2 x 7.9 mm (6.39 x 3.04 x 0.31 in)
Weight	196 g (6.91 oz)
Build	Glass front (Gorilla Glass 6), glass back (Gorilla Glass 6), aluminum frame
SIM	Single SIM (Nano-SIM) or Hybrid Dual SIM (Nano-SIM, dual stand-by)

IP68 dust/water resistant (up to 1.5m for 30 mins) Stylus (Bluetooth integration, accelerometer, gyro)
Type Dynamic AMOLED capacitive touchscreen, 16M colors
Size 6.8 inches, 114.0 cm2 (~91.0% screen-to-body ratio) Resolution 1440 x 3040 pixels, 19:9 ratio (~498 ppi density) Protection Corning Gorilla Glass 6 HDR10+ Always-on display OS Android 9.0 (Pie), upgradable to Android 10, One UI 2
Chipset Exynos 9825 (7 nm) - EMEA/LATAM Qualcomm SM8150 Snapdragon 855 (7 nm)
CPU Octa-core (2x2.73 GHz Mongoose M4 & 2x2.4 GHz Cortex-A75 & 4x1.9 GHz Cortex-A55) - EMEA/LATAM
Octa-core (1x2.84 GHz Kryo 485 & 3x2.42 GHz Kryo 485 & 4x1.78 GHz Kryo 485) -
GPU Mali-G76 MP12 - EMEA/LATAM
Card slot microSDXC (uses shared SIM slot) - dual SIM model only
Internal 256GB 12GB RAM, 512GB 12GB RAM UFS 3.0
Quad 12 MP, f/1.5-2.4, 27mm (wide), 1/2.55", 1.4µm, Dual Pixel PDAF, OIS
Features LED flash, auto-HDR, panorama
Video 4K@30/60fps, 1080p@30/60/240fps, 720p@960fps, HDR10+, stereo sound rec., gyro-EIS & OIS
Single 10 MP, f/2.2, 26mm (wide), 1/3", 1.22µm, Dual Pixel PDAF
Features Dual video call, Auto-HDR Video 4K@30fps
Loudspeaker Yes, with stereo speakers
3.5mm jack No
32-bit/384kHz audio
WLAN Wi-Fi 802.11 a/b/g/n/ac/6, dual-band, Wi-Fi Direct, hotspot
Bluetooth 5.0, A2DP, LE, aptX
GPS Yes, with A-GPS, GLONASS, BDS, GALILEO
NFC Yes
USB 3.1, Type-C 1.0 reversible connector

(f) Paper Shredder 1No.

Continuous run time	continuous
Cut style	cross-cut
Depth	17.7 in.
Dimensions	33"H x 18"W x 17"D
Features	SafeSense; 100% Jam-Proof System; Silent Shred; Caster; Energy Saving System; Continuous Duty Motor; Electronic Auto Start/Stop
Full-wastebasket	yes
Height	30.9 in.
Input voltage	120 V AC
Manual reverse	yes
Maximum shred speed	16
Model	225Ci
Number of sheets per	20
Number of users	3-5
Overload protection	yes
Product line	Powershred

Shred size	0.16" x 1.5"
Shredder use	CDs/DVDs; credit cards; paper clips; staples
Throat width	9.5
Warranty length	2-year limited; limited lifetime
width	17.1 in.

(g) Camera Specifications	1 No.
ITEM	MINIMUM SPECIFICATIONS
Pixels	20.1 mega pixel
Optical zoom	20x
Compatible recording media	Memory stick duo / Memory stick PRO duo / SD Memory Card
LCD	>= 2.5" (230K Pixels)
Stamina (Battery Life)	>= 110 minutes
Battery system	Lithium ION Battery
USB	2.0 High Speed
Still image record mode	JPEG
Supplied Accessories Battery Charger Multi cable Power Cord Application Software	Battery – Lithium ION Battery
Salient features Recording media remaining indicator Wrist strap Carry case	Battery remaining indicator

The Personal Computers, Laptop, camera and Photocopying Machine shall revert to the Contractor at the end of the Contract. The cost of provision of all items under the Engineer's Office shall be deemed to have been included in the rate for provision for the Engineer's Office in the BoQ and therefore no additional payment shall be made for the same.

132.3 Engineer's Laboratory and Survey Equipment

a) General

The Contractor shall provide install and maintain in a good state of repair for the duration of the Contract, such laboratory, survey and other equipment as listed in the Special Specifications. Such equipment shall be of approved manufacturer and shall be made available to the Engineer within the following time periods:

- Survey equipment, not more than 30 days after the Engineer's Order to Supply

- Laboratory equipment, not more than 60 days after the Engineer's order to Supply

Any delays to the Contractor or the Contractor's activities caused by the Engineer being unable to perform survey work, field or laboratory test due to the Contractor's failure to supply and/or maintain the said equipment shall be deemed to have been caused by the Contractor's own actions and any consequences of such delays shall be interpreted as such.

The laboratory and survey equipment shall revert to the Employer on completion of the Contract.

per

b) Importation, possession and use of irradiating devices

Where required, the Contractor shall provide a nuclear gauge for the Engineer's laboratory. He shall follow the procedures for the procurement and deployment of the equipment in accordance with the Ministry of Health Regulatory Process for Setting up a Radiation Facility and arrange to obtain the necessary licences and permits, as required by the Radiation Protection Board in compliance with the Radiation Act, Cap 243 of the Laws of Kenya. The Approval for importation must be sought before the device is brought into the country. The storage facility shall be approved by the Radiation Protection Board and the Ministry of Roads Materials and Research Department.

Before handling the equipment, all staff to be deployed on the use of the gauge shall be trained, assessed and approved by the Radiation Protection Board and the Ministry of Roads Materials and Research Department. Exemptions shall be granted only to persons with proof of previous training by the said institutions. They shall also undergo medical examinations at a medical facility approved by the Board before deployment. The Contractor shall arrange for purchase of radiation badges and monitoring radiation levels every month by the Ministry of Health or an Agent approved by the Radiation Protection Board.

The cost of the medical examinations and monitoring radiation for the Engineer's laboratory staff shall be paid by the Contractor and reimbursed under the BOQ upon production of the receipts. However, the Contractor shall include the cost of obtaining the licences, permits and annual renewal thereof, construction of the storage facility and the transportation cage in his rate for provision of the equipment and no additional payment shall be made in the Contract.

The gauge shall revert to the Contractor on completion of the Contract

132.9 Wireless Communication for the Engineer

The Contractor shall, if so instructed by the Engineer, provide and maintain mobile phones for the exclusive use by the Engineer and for the duration of the Contract. The Contractor shall provide airtime for these mobile phones as directed by the Engineer.

137 Attendance upon the Engineer and His staff

Further to the provisions of Clause 137 of the Standard Specification, the Engineer may instruct the Contractor to provide the staff for attendance to the Resident Engineer in accordance with the following Sub-Clauses:

137.1 Staff employed and paid by the Contractor for attendance upon the Engineer

The Engineer may instruct employment of staff listed below by the Contractor for attendance upon the Resident Engineer. The Contractor shall pay the salaries, allowances and benefits as determined by the Engineer and claim reimbursement under the relevant bill item. These shall be subject to the statutory deductions, namely PAYE, NSSF and NHIF which the Contractor shall remit to the

relevant authorities every month with copy of each remittance being submitted to the Engineer for his records. The minimum monthly gross salary in Kenya Shillings for the respective staff shall be as shown below: : (*Amend as applicable)*

Engineer Staff	Gross Monthly Salary (KES)
(a) Assistant Engineer	……
(b) Inspector of Works	……
(c) Laboratory Technologist	……
(d) Survey Assistant	……
(e) Laboratory Assistant	……
(f) Environmentalist/Sociologist	……
(g) Leveler	……
(h) Office Assistant	……
(i) Secretary	……
(j) Chainmen	……
(k) General Attendants	……

The Engineer shall interview, select and recommend for employment all the positions listed above. Upon employment, the Contractor shall provide each with an Employment Contract in accordance with the Employment Act, 2007 or the latest amendment of the Act, stating therein the conditions of employment. At the end of the Contract Period or termination of services, whichever comes earlier, each employee shall be issued with a Certificate of Service as provided for in the foregoing Act. Use of documents drafted by the Engineer shall not relieve the Contractor of his duties and obligations under this Clause.

The contractor shall include his overheads and profits in his rates.

138 Provision of vehicles

In addition to provisions of the Clause 138 of the Standard Specification, the Contractor shall when instructed to do so provide and maintain in good working condition for the exclusive use of the Engineer and his staff throughout the contract.

The Contractor shall insure comprehensively the vehicles and shall provide competent drivers during normal working hours and whenever required by the Engineer.

Should any vehicle supplied not be in road worthy condition for more than 1 day,, the Contractor shall provide an acceptable equivalent replacement vehicle until such time as the original vehicle is repaired to the satisfaction of the Engineer and returned for use.

Payment for the vehicles (up to 4,000Km.), shall be by vehicle months. Payment for mileage above 4,000Km shall be made at a rate per Kilometre. These payments shall be inclusive of all fuels, lubricants, servicing, insurance, maintenance, drivers and repairs. The rate shall include any overtime the drivers might be due or any other allowances in addition to the normal working hours. Payment shall be made under appropriate items in the Bills of Quantities.

The vehicles shall revert to the Contractor at the end of the contract.

139 Miscellaneous Accounts

The Contractor maybe instructed by the Engineer to make payments of general miscellaneous accounts for such items as stationary, stores and equipment and miscellaneous supervision personnel and claims or the Engineer may direct the Contractor to purchase or pay for the above. The Contractor will be paid on a prime cost basis plus a percentage for overheads and profits under appropriate items in the Bills of Quantities.

140 Payment of Overtime for Engineer's Junior Staff

In addition to the support staff provided by the contractor, the following shall also constitute part of the Engineer's junior staff:

[list to be reviewed based on contract requirements)

(a) Assistant Engineer
(b) Inspector of Works
(c) Laboratory Technologist
(d) Survey Assistant
(e) Laboratory Assistant
(f) Environmentalist/Sociologist
(g) Leveller
(h) Office Assistant
(i) Secretary
(j) Chainmen
(k) General Attendants

If the Contractor wishes to execute the works on regular basis outside the Engineer's normal working hours as given in Clause 108, over a prolonged period, the Engineer may if he deems it necessary, employ additional supervisory staff for which the required salaries shall be in full by the contractor through the Engineer's office. In addition, the Contractor shall provide the required accommodation for such staff at his own cost. The Contractor shall not be reimbursed any of this cost.

141 Measurement and Payment

Item: Mobile Telephones

The provision of mobile phones units for the Engineer shall be measured and paid for by the number. The rate entered in the Bill of Quantities shall include for the costs of providing the mobile units complete with charger unit, a "hands free" headset, connection to the network and all service charges applicable.

142 Liquidated Damages

Liquidated Damages at the rate indicated in the Appendix to Form of Tender shall apply in the event of the work not being completed within the time for completion plus any extension of time which may be determined by the Engineer. The limit of liquidated damages shall be as indicated in the Appendix to Form of Tender.

143 Protection of the Environment

Further to the requirements of Sub-clause 19.1 of the Conditions of Contract, the Contractor shall be responsible for the following measures to protect the environment.

(a) Compliance with national and local statutes and regulations relating to protection of the environment. The Contractor will be responsible for familiarizing himself with all existing national and local legislation in this regard.

(b) All construction activities shall be carried out using the best possible means to reduce environmental pollution such as noise, dust and smoke. All vehicles and plant shall be regularly serviced in accordance with the manufacturer's recommendations to ensure that they operate efficiently and without excessive noxious emissions. The Engineer will have the authority to instruct the Contractor to temporally cease operations and/or remove from the site vehicles or plant which do not comply with this requirements, until such time that he is satisfied that the best practicable means to reduce environmental pollution to a minimum are being used.

(c) The Contractor shall at all times maintain all sites under his control in a clean and tidy condition and shall provide appropriate and adequate facilities for the temporary storage of all waste prior to disposal.

(d) The Contractor shall be responsible for the safe transportation and disposal of all waste generated as a result of his activities in such a manner as will not give rise to environmental pollution in any form or hazard to human or animal health. In the event of any third party being employed to dispose of waste, the Contractor shall be considered to have discharged his responsibilities under this Clause from the time at which waste leaves sites under his control, providing that he has satisfied himself that the proposed transportation and disposal arrangements are such as will not give rise to pollution or health hazard.

(e) The Contractor shall be responsible for the provision of adequate sanitary facilities for his workforce, and that of his subcontractors at all construction and ancillary sites. The Contractor shall not allow the discharge of any untreated sanitary waste to ground water or any water of ground surface watercourse.

(f) All concrete and asphalt plants shall be operated and maintained in accordance with the original manufacturers specifications and manuals, and in such a manner as to minimize emissions of hydro-carbons and particulate if in the opinion of the Engineer the operation of such plant is causing or is likely to cause nuisance or health problems to the site staff or the general public. The Contractor shall carry out such work as is necessary to reduce emissions to an acceptable level within a time-scale agreed with the Engineer.

(g) The Contractor shall regularly spray with water all exposed dirt surfaces to reduce dust levels.

(h) The Contractor shall take all responsible measures, at all sites under his control to prevent spillage and leakage of material likely to cause pollution of water resources. Such measures shall include but not be limited to the provisions of bunds around fuel, oil and bitumen storage facilities and provision of oil and grease traps for servicing and fuelling areas. Prior to construction of such facilities the Contractor shall submit details of pollution prevention measures to the Engineer for his approval.

(i) The Contractor shall be responsible for ensuring that exposed surfaces are re-vegetated as construction progresses all to the satisfaction of the Engineer.

(j) The removal of trees shall be kept to the minimum necessary to accommodate the permanent works. Prior to the removal of any trees the contractor shall inform the Engineer of the intended operation and obtain the permission of the Engineer for the removal of the trees. If any tree is removed without permission the Contractor shall replace it with an approved tree at no additional cost to the Employer.

(k) The Contractor shall ensure that fires, except for controlled fires for burning rubbish, do not start within the Site or in the environs thereto as a result of the works or from the actions of his employees. The burning of waste, such as vehicle tyres causing noxious emissions is prohibited. The contractor shall have available at all times trained fire-fighting personnel provided with adequate fire-fighting equipment to deal with all fires. The contractor shall additionally at all times provide sufficient fire protection and fighting equipment locally to parts of the works which constitutes particular fire hazards.

No separate payment shall be made in respect of this Clause 143 and the Contractor shall be deemed to have allowed in his general rates and prices for the costs of complying with the requirements of this clause.

144 Off Road Environmental Measures

In addition to the provisions of Clause 143 above and all other requirements of the Conditions of Contract, Standard and Special Specifications, the Employer and the National Environmental Management Authority (NEMA) may order certain environmental measures to be carried out which are off the road and not specifically covered under these provisions. The Contractor shall carry out such works with equipment, labour and plant provided under the Contract or shall make such arrangements for specialized works to be carried out by a specialized subcontractor.

The Contractor shall be paid for all direct expenses under a provisional Sum in the Bill of Quantities and a percentage (%) for his handling costs and profits.

145 Staff Training

The Contractor shall allow for training of engineers, technicians and other support staff as may be instructed by the Engineer.

The payment of the allowances of such staff shall be made as instructed by the Engineer under the relevant item of the Bills of Quantities.

200 MATERIALS AND TESTING OF MATERIALS

205 Soils and Gravels

Whenever in the Contract Document a minimum California Bearing Ratio (CBR) is specified, the CBR of the material shall be determined at the specified state of compaction.

(i) After four days soaking in the case of virgin materials, and

(ii) After seven days curing plus seven days soaking in the case of cement improved materials.

211 Bituminous Binders

a) Requirements

(ii) Straight run bitumen

The ash content of penetration grade bitumen shall not exceed 0.5% by weight.

300 SETTING OUT AND TOLERANCES

301 Setting Out

(a) General

If traverse points to be used for setting out are close to the existing carriageway and interfere with the construction works, the Contractor shall relocate them to a location where they will not be disturbed. The coordinates and heights of all transverse points so relocated shall be listed and provided to the Engineer for checking and/or approval. The Contractor shall also reference with monuments the new road centrelines every 200 m long straight sections and at all salient points along curves, consisting of a pin in a concrete beacon, before commencement of any works.

The roads reserve boundary posts shall have 12 mm diameter steel pins, 200 mm long embedded in concrete with 25 mm exposed and sticking from the top surface. This pin shall be coordinated and heightened and details of the same shall be provided to the Engineer for approval.

(b) Detailed setting out

Reference pegs shall be 50 mm x 50 mm in cross section, 600 mm long driven 400 mm firmly into the ground and painted white above ground level. The offset from the centreline shall be indicated by a small nail, 20-25 mm long, with its head driven flush with the top of the peg. Chainages, chainage offsets and reference elevation shall be clearly marked on the sides of the peg to the satisfaction of the Engineer.

400 SITE CLEARANCE AND TOP SOIL STRIPPING

401 Site Clearance

Add the following as the last paragraph of Sub-clause (a).

Site clearance is not required over the paved width of the existing road and shoulders. No measurements and payment for site clearance will be made for this width. The remaining area within the road reserve including the sides of the existing embankments and cutting should be cleared as instructed by the Engineer. This operation shall also include the removal of selected trees as directed by the Engineer. The Contractor shall provide paint and all the assistance the Engineer may require to mark the trees which should not be removed during site clearance.

The Contractor shall take care not to uproot or damage trees which are within the road reserve but outside the construction width. After the contractor has staked out the extent of the road, the Engineer with assistance of the Contractor shall mark out the trees to be removed. After removal the trunk and branches of these trees shall be cut into pieces not more than 2.0 m in length, transported and neatly stored at the nearest Ministry of Roads camp at a position to be indicated by the Engineer. Payment for this work shall be as detailed in the Bill of Quantities. The rate inserted by the Contractor for this work shall include the cost of complying with all the requirements of this clause.

402 Relocation of services

Service providers on the corridor are to be relocated as instructed by the Engineer and expended through bill item 4.

500 EARTHWORKS

502 General

Renumber the existing text as 502.1 and add the following Sub-clause 502.2 to this clause:

502.2 Definitions for Earthworks

Formation level is defined as the lower (bottom) level of sub-base. Sub-grade is the material within 300 mm or such other thickness as may be shown on the drawings, below the formation level. Earthworks are defined as the works below the sub-grade level.

504 Preparation Prior to Forming Embankments

Renumber the existing text as 504.1 and add Sub-clauses 504.2 and 504.3 as follows;

504.2 Benching

Where shown on the drawings or instructed by the Engineer, the Contractor shall, where fill is required, excavate benches where the ground to receive the fill has a slope greater than 1 (vertical): 5 (horizontal).

Where benching is required, the existing ground, after removal of top soil in accordance with the requirements of Section 4 of the Specification, shall be benched by cutting steps such that the horizontal width between the cut face of the bench and the instructed final embankment slope is not less than 1.5 m .Each slope shall be graded to a slope of 1 in 40 from the centreline of the road so as to avoid the pounding of water. The minimum width of 1.5 m shall generally be required for each bench and the Contractor shall allow working in narrow widths.

All earthworks in widening shall be compacted to 100% MDD (AASHTO T99).

The volume of material cut from benches and its re-utilization shall not be measured for payment but is deemed to be included in the Contractor's rates for earthworks.

504.3 Ground Compaction

After top soil stripping in accordance with Section 4 of the Specification and benching in accordance with Clause 504 of the Specification, the existing ground, including benches, under embankments shall be compacted to a dry density of at least 95% MDD (AASHTO T99) to a depth of 150 mm below ground level unless otherwise directed by the Engineer. Compaction of benches other than the first bench will not be separately measured and is deemed to be included in the Contractor's rates for earthworks.

505 Construction of Embankments

Only material approved by the Engineer shall be used in embankments. Material with high swelling characteristics or high organic matter content and other undesirable material shall not be used, unless specifically authorized by the Engineer. Unsuitable material shall include:

- Material containing more than 5% by weight of organic matter, such as topsoil , humus, material from swamps, mud ,log stumps and perishable material
- Material with a swell of more than 3%
- Clay with a liquid limit exceeding 50%
- Material having moisture content greater than 105% of optimum moisture content (standard compaction) in its naturally occurring state.

Material for sub-grade shall meet the following requirements:

- CBR of not less than 15% measured after 4-day soak on a laboratory mix compacted to a dry density of 100% MDD(T99)
- Swell less than 1% on the laboratory mix sample
- Maximum dry Density (MDD) not less than 1500 kg/m^2.

Add the following:

In case the Contractor has in his possession heavy compaction equipment, he may opt to construct the sub-grade in a single layer of 300 mm thickness, following compaction trials and upon the Engineer's approval.

Rename the existing text of the Standard Specification as 507.1 and add the following to this clause:

507.2 Rockfill in Carriageway, Embankment and Behind Structures

(a) Scope of Application

With the approval of the Engineer, the rock fill Material can be used only in the following circumstances:

(i) Where the height of embankment is more than 3 m, including formation level, the lowest 1.0 m thickness can be constructed using rockfill.

(ii) For all heights, the sloped portion beyond shoulder can be constructed using with provision that, under all circumstances, a minimum of 500 mm thick earthen cushion shall be available between formation level and top level of rockfill.

(iii) Behind the structures irrespective of the height of embankment up to the bottom of sub-grade.

(b) Material

The maximum size of stones shall not exceed 300 mm in any direction. The voids between rocks shall be filled by smaller rock fragments.

(c) Spreading and Compaction

The method of compaction as specified under Clause 507.1 of the Standard Specification and/or as directed by the Engineer, should ensure that no boulders are loosely packed and can move or rock after compaction. The top layer as well as the sides of the retaining normal earth fill on one side shall be fully blinded with filter media comprising crushed aggregate and sand. The grading and layering of filter media shall be such as to form effective filter layer through which particles of inner soil fill of embankment are not able to migrate into the rock fill layer in the process of settlement/consolidation or due to movement of water. The layer work shall combine with the layers of the adjacent rockfill so as to facilitate simultaneous compaction.

(d) Rates

The rates are applicable to completed construction as measured by taking levels before and after compaction up to the top of blinding/filter media 300 mm thick and are inclusive of all materials, void filling materials, blinding materials and filter media.

The preload material shall be removed from any stage of the construction when, in the opinion of the Engineer, based on settlement monitoring records, the required primary consolidation of the soft silts has been achieved.

Based on consolidation properties of soil, expected preload time shall be estimated for each stage. However, this time can be influenced, not only by settlement, but also by the rains. The Contractor will not be entitled to extra payment should these times be varied due to the site conditions or the rains.

(e) Settlement Monitoring

Continuous monitoring of settlement will be necessary to check the efficiency of the system. The instruments for monitoring settlement and stability shall include settlement platforms, Piezometers to determine if pore pressures are exceeding limits that might endanger stability, and Inclinometers to determine if lateral movement occurs.

Settlement monitoring devices shall be installed at the Contractor's cost to monitor the settlement behaviour of ground under fill, to establish the effectiveness of the drainage system. The Contractor shall carry out the settlement monitoring works, including the installation of all the required equipment, in accordance with Standard Specification.

508 Compaction of Earthworks

Fill above ground level adjacent to pipe culverts shall be compacted in layers not exceeding 150 mm in thickness to a field density of 100% MDD (AASHTO T99) up to the level of the top of the pipes or top of surround. The compaction shall extend for a width equal to the internal diameter of the pipe on either side of the pipe (s) or surround (s).

Adjacent to the structures, all fill above ground level up to the underside of the sub-grade shall be compacted in layers not exceeding 150 mm in thickness to a field density of 100% MDD (AASHTO T99). In case of fill around box culverts, this shall be carried out for the full width of the fill and for a length bounded by the vertical plane passing through the ends of wing walls.

Where the formation in cut areas is formed of hard material, the Contractor shall remove the hard material to a depth of 200 mm or such other depth as may be directed by the Engineer. The void so formed shall be backfilled with sub-grade quality material and compacted to the same standard and tolerances as for sub-grade in fill.

Improved sub-grade, where required as part of the embankment construction shall be compacted and finished to the same standards and tolerances as those required for normal sub-grade.

509 Mass Haul Diagram

No mass haul diagram has been provided with the Contract documents. The Contractor shall locate suitable materials for constructing earthworks along the alignment and elsewhere.

511 Borrow Pits

Delete the first paragraph and substitute with the following;

Fill material which is required in addition to that provided by excavation shall be obtained from borrow pits to be located and provided by the Contractor but to the approval of the Engineer.

514 Top Soiling and Grassing

Consider the existing text to be Sub-clause 514.1

The embankments and cut faces referred to in Clause 514.1 of the Standard Specification are synonymous with fill slopes and cut slopes defined in Clause 110 (c) of the same specification.

The guiding dams referred to in Clause 514.1 of the Standard Specification are synonymous with the guiding dams referred to in Clause 817 of the same specification.

Add the following Sub-clause 514.2

514.2 Hydro-seeding

Where it is specified that hydro-seeding should be carried out on topsoil, the thickness of the topsoil shall be 100 mm unless, where suitable soil is present, the Engineer orders the topsoil to be omitted or applied in reduced thickness.

The Engineer and the Contractor shall agree the types and mixtures of seeds to be used on before the Contractor orders any seed he may wish to use. The variety of resulting grass or plants should not be attractive to livestock or grass eating animals.

The Contractor shall be solely responsible for establishing an acceptable grass cover and any approval by the Engineer of seed or seed mixtures intended for use by the Contractor shall not relieve him of this responsibility. All areas to be hydro-seeded or hand seeded shall be scarified forming horizontal drills running parallel to the contours. The drills are to be spaced at intervals of 150 to 250 mm apart. Seeding to Mulch shall be added to the hydro-seeding mix at an approved rate.

Hydro-seeding shall be carried out with an approved hydro-seeding machine at a rate of application of not less than 20 gm/m^2 for fill and cut slopes and 10 gm/m^2 for other areas. When the use of anti-erosion compounds is required and such compound is to be applied simultaneously with the hydro-seeding, it shall be mixed with the hydro-seeding mixture before application.

514.3 Application of Chemical Fertilizers

For all areas to be grassed the Contractor shall have the top 150 mm of the prepared surface analyzed to determine the quantity and type of fertilizer that may be required for establishing proper growth conditions for the grass. The locations of soil samples taken shall be indicated on plans by the Contractor. The Contractor shall furnish the Engineer with the soil analysis and subsequent fertilizer recommendations. Only after approval by the Engineer of the nature and quantity of fertilizer may the application proceed.

Soil improvement chemicals and fertilizers shall be made available for application of chemical fertilizer. As such no separate reimbursement to the Contractor shall be made. The Contractor shall be deemed to have included his costs in the rates for top soiling and grassing.

515 Side drains

Whenever excavation works inside drains constitutes a separate operation from the bulk earthworks such excavations shall be classified as catch water drains under Section 8 of the Specification.

517 Measurement and payment

(a) Fill in soft material

Add the following at the end of this item:
Quantities for embankment widening shall be measured using the final compacted volume of filled material over the existing embankment after removal of top soil. No separate payment shall be made to the Contractor for any additional earthworks resulting from his construction methods or for working space for his construction plant and equipment or for complying with the requirements of Clause 504.2 of this specification with respect to benching where necessary. The Contractor shall take this into consideration when preparing his rates.

(c) Spoil in soft material

Add the following at the end of this Item:

The rate for spoil in soft material shall also allow for removal and disposal of material in waterlogged areas. No separate payment shall be made for overhaul.

Add the following:

(n) Item: Providing an approved seed mixture for hydro-seeding

Unit: Kilogramme (kg)

The Unit of measurement shall be the kilogramme of seed of the specified or approved seed mixture provided. The rate shall include the full compensation for procuring and furnishing certified seeds and compliance with Clause 514.2 of this specification.

(o) Item: Hydro-seeding

Unit: Hectare (ha)
The unit of measurement for hydro-seeding shall be the area, measured in hectares of grass established by hydro-seeding which has an acceptable cover. The rate shall include full rate for furnishing cellulose pulp, mixing it with seed, water and with any anti-erosion compound, if required, applying the mixture, watering weeding, reseeding bare patches, and for any other work which may be necessary for establishing an acceptable cover and maintaining the grass.

Add the following to this section. The details apply to both the activities for the quarries and road works.

600 QUARRIES, BORROW PITS, STOCKPILE AND SPOIL AREAS

601 General

The Employer will not make available to the Contractor any land for quarries, borrow pits, stockpile and spoil areas, except for those in the road reserves and specifically approved by the Engineer.

The Contractor will be entirely responsible for locating and providing suitable sources of materials complying with the specifications and for procurement, winning, haulage to site of these materials, rehabilitating the borrow pits, quarries, stockpile and spoil areas, and all costs involved therein. Similarly, the Contractor will be responsible for provision of areas for stock piling materials and disposal of spoil dumps or stockpiling within the road reserve. The Contractor may utilize them subject to the approval of the Engineer.

No additional payment will be made to the Contractor to cover costs arising from the requirement of this clause. The Contractor shall include the costs of complying with this clause in the rates and prices inserted elsewhere in the Bill Of Quantities.

602 Definitions

Add the following to Clause 602:

(d) Materials Report

The information on possible material sites is given for the general guidance of bidders. However, bidders are advised to conduct their own investigation as the information contained therein is neither guaranteed nor warranted.

700 EXCAVATION AND FILLING FOR STRUCTURES

703 Excavation of foundations for structures

Make amendments to this clause as follows

Read the second paragraph as "unless otherwise instructed by the Engineer, all excavated surfaces in material other than hard material, on which foundations for structures shall be placed, shall be compacted to 100% MDD (AASHTO T.99) immediately before structures are constructed.

Paragraph 4, last line: - Replace "95%" with "100%".

Add the following to this clause:

703.1 Preparation of Foundation and Approval

(a) Preparation of Foundation

The bottom of foundations shall be levelled both longitudinally and transversely or stepped as directed by the Engineer. Where the material met with is other than rock, the same shall be compacted to at least 95% MDD. Where rock and soil are met with in part widths, the area in the soil portion shall be sub-excavated to a depth of 100 mm and backfilled with Class 15/20 concrete. All rock faces shall be freed of soft and loose material, cleared and cut to a firm surface, level, stepped or serrated as directed by the Engineer. All seams shall be cleared out and filled with cement mortar, to the satisfaction of the Engineer.

(b) Approval of Foundation

After excavation in each location is completed, the Contractor shall notify the Engineer, and no foundation concrete shall be placed until the Engineer has approved the depth of the excavation and the character of the foundation material.

703a Erosion Protection Works at Upstream and Downstream of Culverts/Bridges

703a.1 Scope

The work shall consist of provision of erosion protection works in the form of bed flooring and curtain or cut-off walls at the upstream and downstream ends of the new as well as the existing box/pipe culverts. The work shall be carried out to such designs and at such locations as indicated on the Drawings or as directed by the Engineer.

The erosion protection works shall consist of dry rubble stone bed flooring and random rubble masonry curtain (cut-off) wall at the upstream and downstream ends of box/pipe culverts.

703a.2 Materials

The material for bed flooring shall be dry rubble stone, each stone weighing not less than 40 kg.

The curtain wall shall be constructed of random rubble masonry in cement mortar of 1:3.

703a.3 Construction Operations

(a) Curtain Wall

The trench for the curtain wall shall be excavated as per Clause 703 of the Standard Specification at such locations and to such depths shown on the Drawings or as directed by the Engineer. After preparing the foundation bed, the curtain wall shall be constructed to the thickness shown on the Drawings and to levels up to top of the bed flooring.

(b) Floor Paving

The bed for the flooring shall be prepared by excavation in accordance with Clause 703 of the Standard Specification or filling in accordance with Clause 707 of the same specification, levelled and compacted to at least 98% MDD. The top of bed shall be prepared to such levels that after construction of the bed flooring, it is in line with the invert of the culvert barrel and sloping away. The bed flooring shall end before the curtain wall.

707 Backfilling of Excavations and Filling for structures

Make amendments to this clause as follows

Delete "95% where ever it appears and insert "100%".

708 Protection of Structures

Add the following to Clause 708.

Unless specific provisions for any structure in respect of cofferdams has been made in the Bill of Quantities, no payment will be made for the erection, maintenance and removal of cofferdams and the Contractor's rates shall be deemed to be all inclusive.

709 Excavations for River Training and New Watercourses

Add the following to Clause 709:

For culvert widening the Contractor shall inspect the structures to be widened and allow for any river training works he deems necessary in his rates for excavation.

710 Stone Pitching

Add the following to Clause 710:

Stone pitching to drains, inlets and outlets of culverts to embankments and around structures shall consist of sound un-weathered rock approved by the Engineer.

All stone for pitching shall be capable of withstanding a crushing stress of 20 N/mm^2 when soaked. The source of stone shall be free from overburden, mudstone, cracks, sand holes, veins, laminations or other imperfections as may be identified by the Engineer during the approval process.

The surface to receive the pitching shall be compacted and trimmed to slope and the stone laid, interlocked and rammed into the material to give an even finished surface.

In areas where stone pitching has been damaged, the Contractor shall identify such areas and notify the Engineer for his agreement of the extent of the Works required and his approval and instructions to proceed with the Works. Stone pitching repair and reconstruction shall be carried out in accordance with Clause 710 of the Standard Specification. The Works shall involve removal of the damaged stone pitching and reconstruction of the said areas in accordance with Clause 710 of the Standard Specification by the use of the sound salvaged material together with any necessary additional material where all such materials shall comply with Section 7 of the Standard Specification

800 CULVERT AND DRAINAGE WORKS

804 Excavation for Culverts and Drainage Works

In the Standard Specification make the following amendments on this clause:

In paragraph 6, line 3, in paragraph 7, line 5 and in paragraph 11, line 6, delete reference to "95%" and insert "100%".

805 Excavation in Hard Material

In the Standard Specification, sub-clause 805 (a) and (b) delete reference to "95%" and insert "100%".

809 Bedding and Laying of Pipe Culverts

In the Standard Specification, sub-clause 809 (a), delete reference to "95%" and insert "100%".

Add the following to Clause 809:

(d) Laying, Bedding and Surround for Culverts Cast In-situ

In addition to the requirements of the Standard Specification, where inflatable balloon method of casting culverts in-situ is used, it is essential that thorough pre-construction trials are carried out and necessary adjustments made to ensure that:

(i) All concrete used for surround and the top 50 mm or 80 mm of bedding for culverts shall be Class 30/20 while the rest of the concrete shall be class 20/20.

(ii) The inner concrete barrel surface immediately in contact with the inflated balloon form during placing shall achieve Class F3 finish.

(iii) Cement to be used shall be cement 42.5

810 Jointing Concrete Pipes

In addition to the requirement of Clause 810 of the Standard Specification, all precast concrete pipes shall be ogee jointed pipes laid with a 1:2 (cement: sand) mortar and provided with fillets on the outside and as described in the Standard Specification.

812 Backfill

In the Standard Specification make the following amendments to this clause:

(a) Wherever the expression "dry density of 95% (AASHTO T99)" occurs, this expression shall be deleted and replaced with "dry density of 100% (AASHTO T99)".

(b) Delete paragraph 6: "For pipes culverts…depth of 150 mm", entirely.

816 Minor Drainage Structures

Add the following to this clause:

(a) Concrete Lined Drains

The exposed surfaces of concrete lined drains shall be a class UF2 finish. Concrete lined drains shall be constructed to the same standard as the minor drainage structures.

(b) Cast in situ chutes on side slopes

Where pre cast chutes are provided, refer to Section 1 of this the specifications.

817 Mitre Drains, Cut-off Drains, Catch Water/Drains, Outfall Drains and Earth Dams

Rename the existing text as 817.1 and add the following sub-clauses:

817.2 Cleaning Existing Drains

Where instructed by the Engineer, the Contractor shall clear blocked side drains and/or outfall drains to a free flowing condition. The work shall consist of but not be limited to:

- Stripping and removal of extraneous material including vegetation and roots to spoil
- Carting away and spreading any spoil to the satisfaction of the Engineer, and
- Reshaping the drains to a free flowing profile.

817.3 Cleaning of Hydraulic Structures

Where instructed by the Engineer, the Contractor shall clean the existing hydraulic structures by removing all undesirable material in the structures to ensure they are clean and free flowing. The Contractor shall dispose of all the silt and other undesirable material to spoil. After the cleaning out of structures, the Contractor shall be responsible for maintaining the hydraulic structures in a clean condition for the duration of the Contract.

817.4 Removal of Existing Pipes, Inlet and Outlet Structures

The Contractor shall remove existing concrete pipes where instructed by the Engineer including bedding, surround, inlet and outlet structures. Concrete shall be disposed of as directed by the Engineer. Masonry structures where in a good condition shall be preserved to reuse as may be directed by the Engineer. Additional material shall be added to the void left after removal of these pipes and structures and shall be carefully compacted to 100% MDD (T99). The void shall then be preserved for placement of any new pipes or construction of new structures.

The existing inlet and outlets structures, where in good condition, and reusable as beds to pipe extensions, shall not be removed. Any such structures removed without the Engineer's approval shall be restored to the original condition at the Contractor's expense.

817.5 Extension of Existing Pipes

Where shown on the drawings or instructed by the Engineer, the Contractor shall extend the existing concrete pipes. Part of the existing pipe surround shall be broken and concrete collar constructed as shown on the drawings. The extension shall be backfilled to the same standards as for new pipes.

817.6 Chute drain for High Embankment Sections

a. Scope

This work shall consist of construction of chute drain on the slope of the road embankment including erosion protection works at the locations and to dimensions shown on the Drawings or as directed by Engineer. The schedule of works shall be so arranged that the drains are completed in proper sequence with roadway to ensure that no damage is caused due to lack of drainage.

b. Materials

The drains shall be of half round pipe of 600 mm dia. formed by joining pre-cast semicircular RCC sections at site as shown in the drawings. The RCC work shall conform to the relevant clauses of these specifications.

The toe wall below ground level shall be of brick masonry in cement mortar 1:4 or plain cement concrete of class 15/20, as shown on the Drawings.

Dumped riprap for erosion protection at ground level shall be hard, unweathered and durable rubble stone of size 150 mm to 250 mm.

c. Construction Operations

Excavation for fixing drain sections at the locations where the chute drains are to be installed, a semi-circular cut on the side slope of the embankment along the line of the chute drain shall be made in such a way that the RCC drain sections could be fixed snugly with their edges flush with the adjoining embankment slope. The sloping bed of the drain shall be to a regular line and suitably compacted to provide a firm bed.

817.7 Stone Masonry and Concrete Paving

a. Description

The work shall consist of construction of lined ditches, stone paved shoulders, hard strips, chutes, toe walls, retaining walls, slab culvert walls, head walls, wing walls, aprons and slope protection works using natural stones for stone related masonry and precast concrete blocks for concrete block masonry set in cement mortar.

b. Materials

(i) Stones

Stones used shall be hard and durable without weak seams or cracks and of rectangular shape. The Los Angeles Abrasion Value shall not exceed 50. The apparent specific gravity shall not be less than 2.2 and water absorption when tested in accordance with AASHTO T85 shall not exceed 5 percent.

(ii) Concrete Blocks

Concrete blocks for concrete block masonry shall be precast from Class 20/20 concrete while those used for paving shall be in Class 25/20 concrete. The blocks shall, in general, have the length, width and height in the proportion of 3:1.5:1 or as ordered by the Engineer. The blocks shall be moist cured for at least 7 days, and kept under cover for another 21 days in the casting bed before being lifted for use in the works. The blocks when tested flat after 28 days of casting shall have a compressive strength not less than 125 percent of the cylindrical compressive strength specified for the class of concrete used.

(iii) Mortar

The mortar shall be made of a mixture of cement and sand in the proportion of one cement to three sand. Cement shall be Portland cement conforming to AASHTO M85, Type I or II. The sand shall be crushed stone or natural sand or a combination thereof conforming to AASHTO M45. Water added shall be just adequate for making a workable mix and shall be subject to the approval of the Engineer.

c. (c) Construction Requirements

(i) Stone Masonry

The stone masonry shall be used for walls of different types above the ground level. The stones shall be of regular shape with length of any stone not exceeding 3 times its height, with the breadth on the bed not less than 150 mm nor greater than three quarters of the

thickness of the wall. Unless otherwise directed, the stone shall have thickness not less than 150 mm.

All stone possessing bedding planes shall be laid with its natural bed as nearly as possible at right angles to the direction of the load, and in case of arch rings, the natural bed shall be radial.

Each course shall present a uniform horizontal line of more or less equal height. Vertical joints shall be broken by the adjoining courses. All joints shall be sufficiently thick to prevent stone to stone contact and shall be completely filled with mortar. On the exposed face no part of the masonry shall deviate from the general line of the wall by more than 20 mm.

Walls of stone masonry shall be provided with weep holes as shown on the Drawings or directed by the Engineer. In continuous long structures, expansion joints shall be formed as shown on the Drawings subject to a minimum spacing of 10 m.

All face joints shall be finished almost flush with the surface of the work without covering the stones. The top surface of all walls shall be provided with 20 mm thick cement mortar coping with a crossfall for shedding rainwater.

Newly laid masonry shall be protected against the harmful effects of weather and cured for a minimum period of 4 days. All visible surfaces of the masonry shall be clean and free from mortar stains and other blemishes.

Backfill behind the stone masonry walls shall be placed only after the masonry work has been in place for at least 14 days or as directed by the Engineer.

(ii) Grouted Stone Riprap

This type of masonry that is constructed in a single layer over a bed of mortar shall be used for shoulder paving, hard strips, aprons, drainage chutes, lined ditches and slope protection. The stone shall be of regular shape and uniform thickness. Prior to laying of the stone, the base shall be brought to regular shape and levels, watered and well compacted. Where this type of masonry is to be used for paving shoulders or for carriageway widening of the existing roads, the base shall be slightly loosened, watered and compacted to 95% MDD prior to application of the riprap. The stone shall be placed over a bed of mortar about 20 mm thick. After placement of the stones by hand, all the joints shall be completely filled with cement mortar. The finished work shall present a uniform surface with no point deviating from the general line by more than 10 mm in the case of shoulder paving, and hard strips, and not more than 25 mm in other cases. The finished work shall be protected against the adverse effects of weather and cured for at least 4 days.

(iii) Dry Stone Riprap

This work shall consist of placing 150 mm to 300 mm size rubble stone on the front side of cut-off walls of culverts and Irish Crossings as erosion protection measure. The dimensions of the riprap construction shall be as shown on the drawings or as directed by the Engineer. The stone used shall be of hard and durable type as are used for stone/boulder masonry. The stone shall be so placed that major hollow spaces are avoided.

d. Measurement and Payment

(i) Stone Masonry

The quantity to be paid will be measured by volume in m^3 of stone masonry complete in place and accepted. In computing the volume for payment, the dimensions used will be limited to those shown on the Drawings or ordered in writing by the Engineer.

No deductions will be made for weep holes, drainpipe or other openings of less than 0.2 m^2 in the area. The cement mortar coping on top of the wall shall be included in the measurement for stone masonry.

If the masonry is for heightening or lengthening an existing wall, the work of removing the plaster, if any, on the old wall including roughening of the surface to effect good bonding shall be considered incidental to the work and shall not be paid for separately.

The quantities of excavation below ground level and backfilling will be measured as structural excavation.

(ii) Grouted Stone and Dry Stone Riprap

Grouted Stone Riprap shall be measured by m^2 of completed and accepted work placed to the specific thickness. Measurement shall be limited to the dimensions shown on the Drawings or as otherwise authorised by the Engineer. No measurement shall be made of unauthorised areas or for extra thickness. Toe walls and cut-off walls below ground level shall be measured in m^3 and paid for as Boulder Masonry.

Where the rip-rap is used for shoulder paving or for widening carriageway of existing road, the bed preparation shall be measured as sub-grade preparation in accordance with Clause 508 of the Standard Specification. In all the other cases, slope and bed preparation shall not be measured for payment but will be considered subsidiary to the pay item.

Dry Stone Riprap shall be measured as placed in position in m^3. Any excavation for making space for placing the riprap shall be measured as common excavation in accordance to Clauses 504 and 505 of the Standard Specification.

(iii) Payment

The amount of completed and accepted work as measured will be paid for at the bid unit prices per m^3 for "Stone Masonry", "Dry Stone Riprap" and "Grouted stone riprap", used for shoulder paving, hard strips, ditch lining, aprons, drainage chutes and slope paving. These prices shall be in full compensation for furnishing and placing all materials, and for all labour, equipment, tools and incidentals necessary for completion of the work complying with the specifications.

Add the following to Clause 819 of the Standard Specification:

819.1 Repair of Drainage Spouts

The repair of drainage spouts shall be made by cleaning of the existing drainage pipes of all muck and replacing the broken pipes or by providing new drainage spouts in cases where the same have not been provided.

a. Materials

(i) Ordinary Portland cement KS 1825
(ii) Aggregates conforming to BS 5328

(iii) GI Pipes
(iv) Paint.

b. Equipment

(i) Welding equipment
(ii) Painting brushes
(iii) Miscellaneous construction equipment

(c) **Procedure**

The existing drainage spouts shall be cleaned of all muck. The new GI drainage spouts shall then be replaced for the damaged spouts as per the detailed drawings.

In case where drainage spouts have not been provided, the RCC kerb shall be cast after fixing new pipes as per the detailed drawings. The casting of concrete and fixing of pipes shall be made as per the standard practice.

The GI drainage spouts shall be painted with black anticorrosive paint of approved brand and manufacture to give an even shade.

The existing reinforcement shall be realigned and additional reinforcement shall be provided as per the drawings or as directed by the Engineer.

Concrete shall be mixed and laid as per the standard practice and as per the drawings. For bonding old concrete with the new concrete, the old concrete surface shall be painted with epoxy bonding agent or polymer cement slurry before the concreting is cast.

820 Measurement and Payments for Additional Items

a. Item: Concrete for top 50 mm or 80 mm bedding and surround for culverts cast in situ.

Unit: m^3

The rate for concrete for each size of culverts instructed shall include for the cubic metre of the top 50 mm or 80 mm of concrete for bedding and surrounds, as instructed, calculated from the dimensions on the drawings or as directed by the Engineer.

The rate for concrete for bedding and surrounds for culverts cast in situ shall include for the cost of providing and placing the concrete and complying with Clauses 809, 810, 814, 819 and 1713 of the Standard Specification.

No extra payment shall be made for provision of inflatable forms and other requirements for casting culverts in-situ and the Contractor shall be deemed to have provided for these in his rates.

b. Item: Cleaning and grading the existing outfall and metre drains

Unit: m^3

Cleaning the existing drains shall be measured by the volume instructed. The volume shall be the product of the cross sectional area of the material to be removed from the drain and the length instructed.

c. Item: Removal of material from existing side drains

Unit: m³

Cleaning of the existing drains shall be measured by the volume instructed. The volume shall be the product of the cross sectional area of the drain to be cleaned and the length instructed. Payment will not be made under this item where the material can be removed in conjunction with bulk earthworks.

d. Item: Removal of the existing pipes

Unit: m³

Removal of the existing pipes shall be measured by the length of culvert removed. It shall include for breaking out where necessary and carting of the removed culvert and surrounds to spoil or stockpile as shall be directed by the Engineer. It shall also include all the costs of complying with the requirements of Clause 817.3.

e. Item: Demolition of inlet and outlet structures

Unit: m³ of concrete or masonry

Demolition of inlet and outlet structures shall be measured by the volume of concrete or of masonry structures demolished. There will be no distinction between reinforced and un-reinforced concrete structures. The rate shall include for disposal of concrete and reuse of masonry as directed by the Engineer. Stone pitching shall not be measured separately and where it is to be removed shall be treated as normal site clearance.

f. Item: Cleaning the existing hydraulic structures

Unit: m³

Cleaning of the existing hydraulic structures shall be measured by the volume of material removed. The rate shall include for the cost of removing all undesirable material, transporting and disposing off as well as the additional costs of gaining access to the structures as specified and maintaining the structures in a clean condition.

g. Item: Concrete collar

Unit m³

Reinforced concrete collars shall be measured by the volume of concrete placed as shown on the drawings or instructed by the Engineer.

Where the existing culvert which is to be extended has a concrete surround, the rate shall also include for removal of this surround for the length of the collar to be placed around the existing culvert.

In all cases the rate shall also include for excavation below the culvert and the preparation and compaction of the in situ material to form a bed for the collar.

821 Cement Mortared Stone Masonry Walls

Masonry walling shall be constructed with sound clean stone with a minimum width of 200 mm. The stone shall have a fair finish. The stone shall be individually placed to break joint and to provide a minimum of voids. The stone shall be wetted and jointed in a 3:1 (sand: cement) mortar. Exposed stone on the wall faces shall be cleaned of mortar by washing or wire brushing. The mortar shall be flush pointed to the approval of the engineer.

Weep holes shall be provided as instructed and shall be cleaned of mortar and any other clogging material that may have entered during construction.

The walling shall be protected from the weather and kept moist for a minimum of seven (7) days after completion.

822 Subsoil Filter Drains

The Contractor shall lay subsoil filter drains where shown on the drawings or instructed by the Engineer. The drain shall extend to the underside of the sub-grade or sub-base and shall consist of a perforated pipe wrapped in geotextile fabric as specified in the Standard Specifications and shown on the drawings. The pipe and fabric shall be laid on and backfilled with granular filter materials. The granular material shall comply with the requirements given in the table below.

BS Sieve Size (mm)	Percentage by mass Passing Sieve	
	Minimum	Maximum
37.5	100	100
20	85	100
10	50	100
5	35	90
1.18	15	50
0.600	5	35
0.150	0	5

823 Gulley Pots and Chambers

Where shown on the drawings or instructed by the Engineer, the existing roadside gulleys and gulley pots shall be adjusted before laying final wearing course such that there are no depressions around man holes, gulleys or chambers. The beds, frames and haunches shall be adjusted with concrete Class 20/20 true to line and level and to the satisfaction of Engineer.

824 Pedestrian Crossings

Where shown on the drawings or instructed by the Engineer, the Contractor shall construct pedestrian crossings across open drains. The crossing will be 2 m wide, with culverts located as directed by the Engineer. The pedestrian crossing shall be finished to the same standards as the adjacent footpath. Where there is no footpath, the crossing shall be finished with approach path comprising 150 mm gravel base with surface dressing similar to the adjacent shoulder as directed by the Engineer.

825 Measurement and Payment for Further Additional Items

(a) Item: Preparation of bed for concrete lined open drains

Unit: m^2

The unit of measurements shall be the square metre of excavation trimmed to receive concrete lining. The rate shall include for all the excavation below the finished line of the drain, providing and laying of gravel bed, and compacting and shaping to the line and level required to receive the concrete lining.

(b) Item: Cast in situ concrete chutes

Unit: m^3

Cast in situ shall be read as "Pre-cast". Pre Cast concrete chutes shall be measured by the volume of concrete cast. The rate shall include for preparation of sides, laying, fixing and for complying with the requirements of Sections 8 and 17 of the Standard Specification.

826 Concrete and Cement Strength

Concrete class shall be as specified. Cement to be used in all construction works shall be 42.5 KN.

900 PASSAGE OF TRAFFIC

903 Maintenance of Existing Road

Amend as follows:

The Engineer shall hand over the existing road to the contractor, in sections, at the commencement of the Contract for construction purpose. However, the Contractor shall be responsible for all repairs and maintenance of the entire road package for the duration of the Contract. The existing road is bituminous and the Contractor shall maintain it with asphalt materials or other materials similar to those of the existing pavement layers. The Contractor shall regularly inspect the road and carry out such repairs and maintenance to the satisfaction of the Engineer. If at any time the Engineer draws the Contractor's attention to a road section which requires maintenance the Contractor shall promptly repair the section. The Contractor shall be legally responsible for any accident or damage attributable to his failure to maintain the road.

Add the following to this clause:

903.1 Maintenance of Right of Way

Throughout the period of the Contract the Contractor shall at all times maintain public vehicular access to the right of way, within the right of way and from the right of way to all public and private land, as it was immediately prior to his commencement of the Works.

The Contractor may, on submission of written request to the Engineer, including a drawing, programme and specification, be given approval to operate:

(a) A road diversion suitable for the road traffic and suitable width or

(b) Traffic on a one way system using manual coordinated direction control or automatic traffic lights having a secure source of power.

Applications for approval shall show every detail of the proposals including road construction cross section including pavement, surfacing, profile and drainage, road signing, communication between the ends of the controlled section lighting and the proposed period of operation.

One way systems shall be provided with adequate sign posting and the Contractor shall limit delays to any traffic to the minimum and with the approval of the Engineer. The travelling public shall be notified by signs, of exceptional delay well in advance of the site of delay, as required by the Engineer.

Payment for temporary diversions, traffic provisions and maintenance of roadways shall be as provided in the Contract and as instructed by the Engineer.

904 Construction of Deviations

Add the following paragraph between the second and the third paragraphs of Item (a):

The Contractor shall programme his works in such a way that traffic shall not be required to pass over more than 1.5 km at any one time unless otherwise approved by the Engineer.

906 Passage of Traffic through the Works

Add the following to this Clause.

The Contractor shall be deemed to have inspected the site and satisfied himself as to the adequacy of his bid for these works and no additional payments will be made for any expenditure on traffic control. Should the Contractor propose any other method of passage of traffic including construction of traffic deviations and use of the existing roads the Contractor shall investigate the alternatives, construct and maintain them to the satisfaction of the Engineer. The Employer shall not be liable for

investigations or costs arising from the alternatives methods of traffic control proposed by the Contractor. Deviations or other measures for traffic control where proposed by the Contractor shall meet the requirements of the specifications and drawings and be approved by the Engineer.

The Contractor shall ensure that the workforce and site supervisory staff at all times wear high visibility garments when work is carried out on or adjacent to a section of the road open to traffic. The Contractor shall ensure that the supervisor or person in charge of the work force is readily recognized from the rest of the workforce. In addition, the Contractor shall provide a full time traffic safety officer to coordinate aspects of road safety for the whole site.

The Contractor shall be deemed to have included all costs related to employing the traffic safety officer and for all the duties performed by him in his rate for passage of traffic.

912 Measurement and payment

(a) Item: Construction of Deviation

Amend as follows:

The rate for construction of deviation shall include provision, placing, forming and compaction of gravel sub-base, stone base and bituminous wearing courses.

(b) Item: Provide and Maintain Road Signages

Unit: Lump Sum

Payment of the lump sum shall be through equal monthly instalments over the period of the Contract on a pro rata basis subject to the approval of Engineer.

(b) Item: Maintain existing Roads and deviations

Unit: Lump Sum

Payment of the lump sum shall be paid per kilo metre length the period of the Contract, excluding the Defects Liability Period provided that the total sum of instalments paid shall not exceed the lump sum; and

(i) If any month the Engineer is not fully satisfied that the Contractor has fully complied with all the provisions of this sub-section, the Employer shall withhold the whole of the instalments due to the Contractor and the Engineer shall, in addition, deduct from any monies due to the Contractor a sum of Kshs 150,000 per day for the period of non compliance from the date of the Engineer's notice for that month.

(ii) Where notified by the Engineer the contractor shall complete maintenance on a section or sections of the road so notified within 14 days. Provided further that, if the Contractor fails to complete maintenance on any section within 14 days of the Engineer's notification thereof, the Engineer shall deduct Kshs. 200,000 for delay per day.

(c) Item: Reinstatement of Deviations

In the first paragraph of Clause 912 (h), delete the words "by the lump sum stated in the Special Specification' and replace with 'as described under Item 9.04 of the Bill of Quantities".

1100 SHOULDERS AND FOOTPATHS

Add the following to this section:

1107 Footpaths

Where shown on the drawings or directed by the Engineer, footpaths shall be constructed. The Footpaths shall be constructed using the precast concrete paving blocks (coloured in red oxide)) as the finish on neat gravel base. The line of the footpaths shall be as shown on the drawings or as directed by the Engineer.

1107.1 Pre-cast Concrete Paving Blocks

Precast concrete blocks shall be hydraulically pressed, complying with BS 7263: Part 1. Blocks shall be laid in accordance with BS 7263: Part 2 to the required cross fall.

1107.2 Flexible Surfacing for Footpaths and other Paved Areas

Flexible surfacing for footpaths and paved areas shall be laid in compliance with section 16 of the Standard Specification.

Surfacing shall be laid true to level and cross fall as shown on the drawing or instructed by the Engineer. Payments for flexible surfacing on footpaths will be measured and paid in accordance with the provisions of section 16 of Standard Specification.

1108 Measurement and Pavement

(a) Item: Precast Concrete Paving Blocks

Unit: m2

Precast concrete blocks shall be paid by the area measured on plan. The rate shall include for supplying, laying the bedding, jointing, compacting, laying at kerbs and radii and all the Contractor's obligations with respect to this clause.

1200 NATURAL MATERIAL SUBBASE AND BASE

1201 GENERAL

Natural materials for base and subbase shall conform to the specifications given in Section 12 of the Standard Specifications for Road and Bridge Construction for cement and lime improved base and subbase.

1202 MEASUREMENT AND PAYMENT

Natural material for subbase and base shall be measured by the cubic metre placed and compacted upon the road calculated as the product of the compacted sectional area laid and the length.

Measurement and payment of natural materials for subbase shall be in conformity with Method A of the Standard Specification with the following amendment

Delete "Free haul of 1.5km" whenever it is referred to under this Clause. No separate payment shall be made for overhaul in this contract.

1203 HAND PACKED STONE

Hand packed stone base is a layer of hand laid stone of defined size and durable in nature, laid in a maaner such that when proof rolled and compacted it forms a stable and dense matrix as a road base.

a) Sources of Material

The Contractor may obtain suitable material from existing commercial quarries. Before being delivered to the site of the Works, the material will be tested for compliance with the requirements stipulated in the following sub clauses.

b) General Requirements

Where the use of hand packed stone is specified, the shall have a nominal base dimensions of 75mm square and minimum height of 150 mm or when compacted to give a layer of 150 mm. The rock from which the stones and screenings are produced shall be class C with the following requirements:

A.C.V. – Max. 40%
L.A.A. – Max. 30%
S.S.S. – Max. 12%
FI -30 max
CR – 60 min
Water absorption – 2% Max.

c) Stones

The stones shall be free from an excess of flat or elongated particles, soft and less durable rock, clays, loam, topsoil and other deleterious matter. The stones shall be of such grading and size that they pack firmly when laid by hand. The larger stones shall have a maximum dimension slightly greater than the thickness for the required compacted layer and be of a shape acceptable to the Engineer. The smaller stones shall have a reasonably uniform grading and be of a nominal size suitable, in the opinion of the Engineer, for filling the surface voids of the as placed larger stones in place. The nominal size of the smaller stones will be of the order of 50mm.

d) Screening

The screenings shall consist of tough durable crushed rock, free from an access of flat, elongated, soft or disintegrated pieces and harmful material, such as loam, clay, organic matter, or other deleterious substances and shall be to the Engineer's approval.

The grading of the screenings shall form a smooth curve and shall be within and approximately parallel to the following limits: -

B.S. Sieve Size	Percentage by Weight Passing B.S. Sieves
10mm	100
5mm	85-100
0.425mm	30-50
0.150mm	10-30
0.075mm	0-20

Sandy soil which may, with the approval of the Engineer, be added to the screenings or used in lieu of the screenings, shall comply with the following requirements: -

i) It shall consist mainly of sand sizes and have a reasonable smooth grading.
ii) The fraction passing 0.075mm sieve shall be less than the weight passing 5mm sieve.
iii) P.I. shall not be greater than 5.

e) Construction

On the prepared area, individual stones shall be positioned by hand with the greatest dimension vertical, and the largest and flattest end downwards. The greater number of stones shall be slightly higher than the thickness of the layer when laid. After placement of the stones in the specified manner, the material shall be initially compacted, preferably with a grid roller and a vibratory roller, which shall continue until the layer is thoroughly keyed, and until the compacted layer contains not more than 10% air voids. The irregularities that may show up during compaction shall be corrected by loosening the surface and removing or adding material as may be required and recompacting. Where necessary quarry fines of the same material shall be spread and broomed into the interstices and rolling shall continue until no more fines will go in to give a homogenous compacted layer of sub base.

f) Measurement and Payment

The stone will be paid for as the volume in cubic metres of material measured in place upon the road. The volume of material shall be calculated as the product of the compacted thickness specified or ordered by the Engineer and the net area required to be laid. The rate shall be the full inclusive price for providing, laying, packing and compacting the material and shall include for complying with Clauses 1311a), b). The rate shall also include for all haulage. The rate quoted for this item should include the cost for laying the levelling quarry dust layer, as no extra payment shall be made for this layer.

1204 MATERIAL REQUIREMENTS

The Contractor shall allow for winning, hauling to site, laying, watering and compacting to 100% MDD (AASHTO T.180). The material shall also comply with the following requirements:-

P.I. - Max 15

CBR @ 100% MDD (modified AASHTO T180) at 4 days soak: Min 30

P.M. - Max 250

1300 GRADED CRUSHED STONE SUBBBASE

1303 Material requirements

The material for graded crushed stone Sub-base shall comply with requirements for Sub-base stone Class B 0/40. After compaction and compliance with the requirements of Clause 1403 of this specification below, the Sub-base/Base graded crushed stone material shall have a maximum of 8% of particles smaller than 0.075 mm and the resultant layer shall comply with all requirements of Section 13 of the Standard Specification.

The crushing ratio for all graded crushed stone pavement materials shall be minimum 100%.

1306 Laying and Compacting Graded Crushed Stone Sub-base

Graded crushed stone shall be laid by a paving machine.

Add the following to this section:

1311 In Situ Reprocessing of Graded Crushed Stone

In pavement reconstruction sections with an existing graded crushed stone base, the existing graded crushed stone shall be used in pavement and shoulder construction. The bituminous layer shall be removed to spoil or for recycling as instructed by the Engineer, leaving in place the existing graded crushed stone base in situ. After removal of surfacing, the graded crushed stone shall be jointly inspected by the Engineer and Contractor and any contaminated material re-used in earthworks, deviations or disposed off in manner approved by the Engineer. Where the contaminated layer extends into a lower pavement layer, the Existing sub-base or sub-grade layer shall be reworked and re-compacted before reprocessing the graded crushed stone layer. Before addition of any stone material the existing surface shall be lightly compacted to remove undulations and levels taken. The Contractor shall confirm the grading of the stone material and shall add imported material, mixed in such a manner that the reprocessed material shall comply with the requirements of Clause 1303 of the Standard Specification. The material shall be scarified, mixed, watered, spread and compacted as sub-base or base in the carriageway and/or shoulders as shown on the drawings or directed by the Engineer.

1400 CEMENT TREATED MATERIALS

1403 Cement Treatment

Cement for improvement shall be Ordinary Portland Cement complying with Clause 207 of the Standard Specification. The cement content of the improved graded crushed stone material will be in the range of 1% to 2% by weight. The actual cement content requirement will be determined on site as directed by the Engineer after laboratory and site trials.

14A LEAN CONCRETE

14A/04 Mix Requirements

(i) Proportions

The ratio of cement to aggregate shall be 3% by weight (including any absorbed moisture but excluding free water in the aggregate).

14A/05 Method of Construction

(i) Curing

Add the following to this Clause:

The lean concrete shall be protected from injuries action by sun, rain, flowing water, frost, or mechanical injury. At completion of finishing and at the time the concrete surface has hardened enough to prevent the surface being marred by the curing material it shall be cured by one or more of the following methods:

Moist Curing: Wet the concrete surface with a fine spray of water and cover with water proof paper, polythene-coated burlap, or polythene sheeting. Thoroughly saturate polythene-coated burlap with water before placing. Select size of sheets that are at least 300 mm longer than necessary to cover the entire width and edges of base. Place sheets with light coloured side up. Overlap adjacent sheets not less than 300 mm with the lapped edges securely weighed down or the sheets lapped 150 mm and cemented or tampered to form a continuous cover and closed joint. Place the weight on the cover down to prevent displacement or billowing from winds. Fold coverings down over the exposed edges and secure with a continuous bank of earth or other approved means. Use covers in good condition when placed and immediately repair tears and holes they occur during the 7-day curing period.

Liquid Membrane-forming Compound Curing: Apply compound immediately after surface loses its water sheen and has a dull appearance. The curing membrane method should conform to AASHTO M 148. Mechanically agitate curing compound during use. Apply at maximum rate of 5.0 square meters per litre of compound. If compound lacks uniform continuous coherent films or exhibits checks, cracks, peels, or pinholes, apply an additional coat of compound to areas where films is defective. Have readily available impervious sheet curing for use to protect freshly placed concrete in the event that conditions occur to prevent correct application of compound at the proper time. Re-spray surfaces with curing compound after rainfall. Apply at the same rate required above.

The concrete surfaces shall be protected from foot and vehicular traffic and other sources of abrasion for a minimum of 72 hours. The curing method adopted shall be maintained for the entire curing period.

14A/08 Measurements and Payment

(a) Item: Curing lean concrete

Unit: m^2

The unit of measurement shall be the area of surface cured satisfactorily. The rate shall allow for complying with Section 14A of the Standard Specification.

1500 BITUMINOUS SURFACE TREATMENTS AND SURFACE DRESSING

1502B Materials for Prime Coat and Tack Coat

(i) The binder for prime coat shall be MC 70 cutback bitumen. This shall be applied over granular surface to receive any bituminous layer.

(ii) The binder for tack coat shall be K1-60 bitumen emulsion. This shall be applied over bituminous surface to receive further bituminous layer. A tack coat shall also be applied on prime coat, which has lost its adhesive properties due to contamination, long exposure or weathering before receiving bituminous layer. Such an application shall be made without additional expenditure by the Employer, unless it is required due to reasons outside the Contractor's control.

1504B Spraying of Prime Coat and Tack Coat

(i) The rate of application of prime coat shall be from 1.0 to 1.2 litres/m². The exact quantity to be applied may be varied within these limits to suit field conditions and will be determined from trials by the Contractor and approved by the Engineer.

(ii) The rate of application of the tack coat on bituminous surface shall be 0.3 to 0.8 litres/m². The exact quantity to be applied may be varied within these limits to suit field conditions and will be determined from trials by the Contractor and approved by the Engineer.

1502C Materials for Surface Dressing

(a) Binder

The binder shall be 80/100 penetration bitumen.

(b) Chippings

(i) Hardness, soundness, shape and cleanliness

Stone for surface dressing on the carriageway and shoulders shall be class 1. Should it be necessary and in the Engineers opinion to clean chippings before laying, the Contractor will wash the chippings to the satisfaction of the Engineer and no extra payment will be made for this operation.

1503C Rate of Application of Binder and Chippings

Rates of spray of bituminous binder and spread rates for chippings shall be as stated in the relevant items in the Bill of Quantities or as instructed by the Engineer. The exact rate to be applied may be varied to suit field conditions and will be proposed by the Contractor for the agreement of the Engineer.

Should any change occur in the nature of source of chippings or binder, the Contractor shall advice the Engineer accordingly who will then decide if new field trials are necessary and if any revisions are required to the spray and spread rates.

Payments for binder and chippings will be based on instructed rates.

1505C Pre-coated chippings

Where shown on the drawings or instructed by the Engineer, chippings used for surface dressing shall be pre-coated. The bituminous binder used for pre-coating shall be A3 anionic bitumen emulsion.

The chippings shall be completely coated with the binder at a nominal rate of 0.4% - 0.8% by dry weight of chippings. The actual rate of application should be as instructed by the Engineer following the Contractor's field trials.

The mixing plant shall comply with the requirements of Clause 1603A, Parts (a) and (b), of the Standard Specification.

The binder shall be heated so that it can be distributed uniformly and care shall be taken not to over heat it. The temperature shall at no time exceed 35°C.

The chippings shall be washed (if necessary) dried and heated so that they are mixed at a temperature of between 20°C and 35°C The binder shall be introduced in the mixer in the amount specified and the materials mixed until a complete and uniform coating of the chippings is obtained.

Should any change occur in the nature of source of chipping or binder the Contractor shall advise the Engineer accordingly who will then decide if new field trials are necessary and if any revisions are required to the spray and spread rates.

1508C Application of Surface Dressing

At the joint between the shoulder and carriageway, each layer of surface dressing on the carriageway shall be extended 100 mm into the shoulder. In like manner each layer of surface dressing on the shoulder shall also be extended 100 mm into the carriageway. The Contractor shall allow in his rates for this overlap. No additional payment will be made for either the binder or the chippings when complying with this requirement.

1509C Aftercare and Control of Traffic

Surface dressing shall not be trafficked for at least seven (7) days. Where the surface dressing is to be applied to new asphalt concrete, a minimum period of 72 days must elapse before commencing the surface dressing.

1511C Measurement and Payment

(c) Item: Pre-coated chippings

Unit: m^3 of each nominal size of each class

Pre-coated chippings shall be measured by the cubic metre of each nominal size for each class calculated as the product of the area in square metres instructed to be covered and the reciprocal of the instructed rate of application in m^2 per M^3 or the actual rate of application in m^2 per m^3 whichever calculation gives the lower volume.

The rate for chipping shall include for the cost of providing and hauling the chippings and bitumen pre-coating the chippings with bitumen at the instructed rates, spreading and rolling the chippings at the instructed application rate, all hauls as necessary and complying with parts A and C of Section 15.

1600 BITUMINOUS MIX BASES, BINDER COURSES AND WEARING COURSES

1600A GENERAL

1603A Construction Plant

(a) Compaction Plant

To achieve specified densities it is expected that vibrating rollers will be required to achieve satisfactory results. It is essential that thorough pre-construction trials be carried out to ensure that the vibrating rollers are set up at the optimum amplitude and frequency for the material being laid that they do not break down aggregate particles and that the optimum compaction temperatures are established to allow compaction without creating ripple effects or other distortions of the surfacing.

1606A Site trials

Delete the second paragraph and insert the following:

The trials shall be carried out to:

(a) Test materials designed in the laboratory so that a workable mix, which satisfies the specified requirements can be selected.

(b) Enable the Contractor to demonstrate the suitability of his mixing and compaction equipment to provide and compact the material to the specified density and to confirm that the other specified requirements of the completed asphalt pavement layer can be achieved.

Renumber paragraph 5 from "(v)-(vi)" to read "(v)-(viii)".

1607A Mixing of Aggregates and Bitumen

Delete the second and third paragraphs and then add the following:

The aggregates minus the filler prepared as specified above shall be accurately weighed and conveyed into the mixer in proportionate amounts of each aggregate size required to meet the job-mix formula. The required amount of bitumen for each batch shall be introduced into the mixer in batch mixing. The bitumen shall be added after the aggregates have been introduced into the mixer and mixed for 5 to 10 seconds. The filler shall be added after the bitumen and mixing shall continue after addition of the filler for at least the time recommended by the plant manufacturer or as much extra time as is necessary to obtain a homogenous mixture but for no longer.

The Aggregates and bitumen shall each be heated to enter the mixing chamber at temperatures selected within the range 150 °C to 170 °C. The temperature of the stone at entry to the mixing chamber shall not be more than 15 °C higher than that of the bitumen; the temperature of the bitumen shall be such that on entry to the mixer its Kinematic viscosity is in the range of 150-300 centistokes. The temperature of the aggregate and bitumen at entry into the mixing chamber shall be chosen within the above limits and having regard to the prevailing air temperature and haulage distance to ensure that the temperature of the mix is not less than 135°C when it is laid and not less than 120°C when rolling is commenced. If excessive displacement occurs under the roller the minimum rolling temperature may be reduced at the sole discretion of the Engineer.

The volume of the aggregates and bitumen shall not be so great as to extend above the tips of the mixer blades when the blades are in vertical position. All overheated and carbonized mixtures which form or show indication of moisture will be rejected. When moisture is detected in the finished mixture, all aggregates in the bins shall be removed and returned to the stockpiles.

1608A Transporting the Mixture

Delete the entire clause and replace it with the following

The mix shall be transported from the mixing plant to the spreader in truck having tight, clean smooth beds, which have been treated to prevent adhesion of the mixture to the truck bodies. Gasoline, Kerosene, diesel fuel or other solvent shall not be used for this purpose. Loads shall be covered by waterproof canvas or metal sheets during wet weather. Vehicles shall be insulated when the air temperature and/or length of haul make this necessary to maintain the temperature between specified limits. Any loads wetted excessively by rain will be rejected. Hauling over freshly laid material will not be permitted.

1609A Laying the Mixture

Add the following paragraphs:

Mixtures that have a temperature of less than 135°C when dumped into the paver will be rejected. The paver shall be adjusted and the speed regulated so that the surface of the course will be smooth and the course of such depth shall be such that, when compacted, it will conform to the cross-section shown on the drawings. Lanes shall be parallel to the road centreline.

All joints shall present the same texture, density and smoothness as other areas of the surfacing. The joints between old and new lanes or sections shall be carefully formed in such a manner as to ensure a continuous bond between the old and new pavement. All contact surfaces at cold joints, and joints with structures including manholes and pits shall be coated with a thin and uniform coat of MC 70 or other medium curing bitumen.

1610A Compaction

Add the following paragraphs:

Tests for conformity with the smoothness and levels specified shall be made by the Contractor immediately after initial compaction and any deviations in excess of the specified tolerances shall be corrected by loosening the hot surface with rakes and removing or adding materials as necessary before continuing the rolling. The speed of the rollers shall not exceed 5 km/h and shall at all times be slow enough to avoid displacement of the hot mixture. Any displacement of the mixture, occurring as results of reversing the direction of the rollers, or from any other cause, shall be corrected at once by loosening the surface with rakes and re-rolling. Rolling of the surfacing shall be continued until all roller marks are eliminated and the required density is obtained.

The rollers shall not be permitted to stand on surfacing which has not been fully compacted. Precautions shall be taken to prevent the dropping of oil, grease, gasoline or other foreign matter on any layer.

The Contractor shall provide competent workmen who are capable of performing all work incidentals to the correction of all surfacing irregularities.

After final rolling, no vehicular traffic of any kind shall be permitted for at least 24 hours.

1611A Finishing Joints and Edges

Add the following to this clause:

Construction joints in the various pavement layers shall be staggered by at least the following distances

(a) Joints in Binder Course relative to joints in Wearing Course: 500 mm
(b) Joints in Dense Bitumen Macadam base relative to joints in Wearing Course: 400 mm

The contractor shall produce a plan showing all pavement construction joints for approval by the Engineer before pavement construction commences.

Transverse joints in Dense Bitumen Macadam Base Binder and Wearing Course shall be staggered by at least 500 mm. The roller shall pass over the unprotected end of the freshly laid mixture only when laying of the surfacing is to be discontinued for such length of time as to permit the mixture to become cold. Otherwise 500 mm at the end of the lane shall be left uncompacted.

Cold transverse joints shall be cut back to expose an even, vertical service for the full compacted thickness of the course and painted with medium curing cutback bitumen as specified above. The fresh mixture shall be raked uniformly against the joint and carefully compacted to ensure a good bond with the cold material.

The Contractor shall adjust any kerbs, gulley pots and chambers in accordance with final finished road level before laying the final Wearing Course.

1614A Tolerances

Add the following at the end of the second paragraph:

Passing sieves between 1.0 mm and 0.075 mm sizes, +3% by total weight of dry aggregate including mineral filler

Passing 0.075 mm sieve, +2% by total weight of dry aggregate including mineral filler

1600B ASPHALT CONCRETE FOR SURFACING

1602B Materials for Asphalt Concrete

(a) Penetration grade bitumen

Delete sub-section (a) and replace with the following:

Bitumen shall be penetration grade, and shall meet the requirements of Table 4.3 in ORN 19 as summarized below:

Table 4.3 (ORN 19) Minimum requirements for penetration grade bitumen

Test, based on Original Bitumen	Test Method (ASTM)	Penetration Grade		
Penetration at 25°C	D5	40/50	60/70	80/100
Softening point (°C)	D36	49-59	46-56	42-51
Flash point (°C) (Min)	D92	232	232	219
Solubility in trichloroethylene (%) (min)	2042	99	99	99
TFOT heating for 5h at 163°C:				
(a) Loss by mass (%, (Max)	D1754	0.5	0.5	0.8

(b Penetration (% of original),(Min)	D5	58	54	50
(c) Ductility at 25°C, (Min)	D113	-	50	75

The bitumen for asphalt concrete works shall 80/100 grade.

(c) Mineral Filler

(i) Under this sub-clause in the Standard Specification, rename Table 16B-1 as 16B-1 (a)

(ii) Add the following

The coarse aggregate shall entirely be crushed rock from a source known to give high values of stability (>9 kN) in the Marshall Test. Crushed river gravel shall not be used. Aggregate shall be Class "a" meeting the requirements given in Table 16B-1(b) below.

Table 16B-1(b) Requirements for coarse aggregate (retained on 6.3-mm sieve)

Property	Test	Property
Cleanliness	Sand equivalent for <4.75 mm fraction (Material passing 0.425 sieve) Plasticity index[2] Linear shrinkage	>40 <4 <2
Particle shape	Flakiness index (FI)[3]	<25
Strength	Aggregate Crushing value (ACV)[4] Aggregate impact value (AIV)[4] 10% FACT (dry) KN[4] Los Angeles Abrasion (LAA)[5]	<25 <25 >160 <30
Abrasion	Aggregate Abrasion Value[4]	<12
Soundness[7]	Sodium Sulphate Soundness (SSS): Coarse aggregate Fine aggregate Magnesium Sulphate Soundness (MSS): Coarse aggregate Fine aggregate	 <10 <16 <15 <20
Polishing	Polished Stone Value	>60
Water absorption	Water Absorption[6]	<2
Bitumen affinity	Immersion Mechanical test: index of retained Marshall stability [8]	>75

Property	Test	Property
	Static immersion test[9] Retained indirect Tensile strength[10]	>95% coating retained >79% (at 75% VIM)

Key

1. AASHTO 1176
2. British standard 1377, part 2
3. British standard 812, part 105
4. British standard 812, parts 110 to 114
5. ASTM C131 and C535
6. British standard 812, part 2
7. AASHTO T104
8. D whiteoak (1990) (shell bitumen handbook)
9. AASHTO T182
10. AASHTO &283

The aggregates for bituminous mixes shall be stored in single sizes in separate bins or in areas covered with tightly laid wood planks, sheet metal, hard compact gravel, concrete or other hard and clean surfaces. The surfaces shall be self-draining, and in such a manner that will preclude the inclusion of foreign material. Aggregates of different grades and sizes and from different sources shall be stored in separate piles and if these piles are close together they shall be separated by bulkheads.

1603B Grading Requirements

The grading mixture of a coarse and fine aggregate shall be within and approximately parallel to the grading envelopes as given in table 16B-1(a) for 0/20 binder coarse. In addition, the material shall comply with the requirements below.

The Contractor shall investigate a number of gradings so that a worktable mix, which also retains a minimum of 3% voids in mix (VIM) at refusal density, is identified. As guidance towards identifying a suitable grading, recommendations are provided in Tables 16B-1(c) and (d)

Table 16B-1(c): Superpave aggregate grading control point

Nominal Maximum Size (mm), (Note 1 below)	Sieve size (mm)	Control point (%passing)	
37.5	0.075 2.36 25.0 37.5 50	0 15 90 100	6 41 90 100 -
25.0	0.075 2.36 19.0 25.0 37.5	1 19 90 100	7 45 90 100 -
19.0	0.075 2.36	2 23	8 49

Nominal Maximum Size (mm), (Note 1 below)	Sieve size (mm)	Control point (%passing)	
	12.5	-	90
	19.0	90	100
	25.0	100	-
12.5	0.075	2	10
	2.36	28	58
	9.5	-	90
	12.5	90	100
	19.0	100	-

Table 16B-1(d): Super pave boundaries of aggregate restricted zone

Sieve size within restricted zone	Minimum and maximum boundaries of Sieve size for nominal maximum aggregate size (minimum /maximum % passing)			
	37.5	25.0	19.0	12.5
4.75	34.7-34.7	39.5-39.5	-	-
2.35	23.3-27.3	26.8-30.8	34.6-34.6	39.1-39.1
1.18	15.5-21.5	18.1-24.1	22.3-29.3	25.6-31.6
0.6	11.7-15.7	13.6-17.6	16.7-20.7	19.1-23.1
0.3	10.0-10.0	11.4-114	13.7-13.7	15.5-15.5

Note (1): The definition of Nominal Maximum Size of aggregate is one sieve larger than the first sieve to retain more than ten per cent of the aggregate. It is also recommended that where possible that largest particle size should not be more than 25 mm so that the requirements of the marshal test can be complied with.

Mixes identified for compaction trials shall be manufactured to the laboratory design bitumen content and two other bitumen contents of + 0.5 % and 1.0% additional bitumen. Cores will be cut to determine the density of compacted material. The core will then be re-heated to 145±5°C in the appropriate mould and compacted to refusal in the vibrating hammer test. The cores cut from the compaction trial must have a destiny equivalent to 95% refusal density.

The compaction trials will identify a workable mix which can be made to bitumen content which gives 3% voids in mix (VIM) at refusal density.

1604B Requirements for Asphalt Concrete

The nominal binder content shall be 5.0% - 5.5% in addition to the requirements given in Table 16B-2 0f the Standard Specification. The maximum Marshall stability of the mix for 2x75 blows shall be 9 kN and, at compaction to refusal, it shall have 3% voids in mix (VIM).

In order to determine the suitability of a coarse aggregate source, a Marshall Test programme shall be carried out. It will be advantageous to use a crushed rock which is known from past experience to give good results in the test procedure. A grading conforming to the type I binder course detailed

in Table 16B-1(a), 0/20, of the Standard Specification should be tested (but with 100% passing the 25 mm sieve) and it shall meet the requirements of Table 16B-2 of this specification.

Having established the suitability of the aggregate source several gradings shall be tested in the laboratory, including that used for the Marshall Test, to establish relationships between bitumen content and VIM at refusal density. For each mix, samples will be made up to a range of bitumen contents and compacted to refusal using a gyratory compactor and a vibratory hammer in accordance with BS 598 (Part 104:1989) with the following revision.

"It should first be confirmed that compaction on one face of the sample gives the same refusal density as when the compaction cycle is applied to both faces of the same sample. The procedure which gives the highest results shall be used"

From the bitumen content –VIM relationship, bitumen content which corresponds to VIM of 3% shall be identified. Compaction trial shall be undertaken to confirm the workability of the mix. At least two or more grading will be required for compaction trials. The compaction trials will identify a workable mix which can be to a bitumen content which gives 3% voids mix (VIM) at refusal density.

1605B Mixing and laying asphalt concrete

The temperature of the bitumen and aggregates when mixed shall be 110±3°C above the softening point (Ring and Ball) of the bitumen.

Compaction shall commence as soon as the mix can support the roller without undue displacement of material and completed before the temperature of the mix falls below 90°C.

The minimum thickness of individual layers shall be as follows:

(a) For 37.5 mm mix 65 mm
(b) For 25.0 mm mix 60 mm
(c) For 19.0 mm mix 50 mm
(d) For the 12.5 mm mix 40 mm

1606B Compaction

Rolling shall be continued until the voids measured in the completed layer are in accordance with the requirement for a minimum compacted density of 98% of Marshall Test Maximum Density or a minimum mean value of 95% of refusal density (with no value less than 93%) as appropriate.

1608B Sealing bituminous surface

After the Wearing Course has been trafficked and bitumen has hardened, the Wearing Course shall be sealed with 10/14 mm pre-coated chippings in accordance with Clause 1505C. The period of hardening will depend on the traffic level and should be such that the chippings will not become embedded in the wearing surface. The Contractor will propose and the Engineer will approve a section to be ready for sealing.

1600C DENSE BITUMEN MACADAM FOR BASE

1601C GENERAL

1602B MATERIAL REQUIREMENTS

(a) Penetration Grade Bitumen

Bitumen shall either be either 80/100 or 60/70 penetration grade as specified in the special specficatios or as instructed by the Engineer.

(a) Aggregate

Course aggregate (retaind on 6.3mm sieve) shall consist of crushed stone produced form rock or boulders, the minimum size of which are at least 4 times the maximum size of the final crushed stone.The coarse aggregate shall be free from clay,silt, organic matter and other deleterious substances and shall comply with the following requirements:-

LAA Max 35
ACV Max 28
SSS Max 18
FI Max 25

The crushing ratio shall not be less than 100%.

Fine aggregate (passing a 603mm sieve) shall be free from cla,silt, organic and other substances.Unless otherwise specified.The sand equivalent of the fine aggregate shall not be less than 40 and SSS not more than 12.

(b) Mineral filler

Mineral filler shall consist of finely ground particles of limestone,hydrated lime, OPC or other non plastic mineral matter as specified.It shall be thprpuhly free from lumps.At least 75%(by weight) shall pass a 0.075mm sieve and 100% shall pass a 0.425mm sieve.It shall halve bulk density in toluene measured in accordance with BS = 812 between 0.5 and 0.9 g/ml.

1603C GRADING REQUIREMENTS FOR DENSE BITUMEN MACADAM

The grading of the mixture of coarse and fine aggregate shall be within and approximately Parallel to one of the following grading envelopes as specified.

Sieve size	% by weight passing		
	0/40	0/30	
50	100	-	
37.5	95-100	100	
28	70-94	90-100	
20	-	71-95	
14	56-76	58-82	
6.3	44-60	44-60	
2	25-40	26-40	
1	20-33	20-33	
0.3000	7-21	7-21	
0.150	4-15	-	
0.075	2-8	2-8	

1604C REQUIREMENTS FOR BITUMEN MACADAM

The mixture shall comply with the appropriate requirements given in the table 16C-1 as stated in the special specifications
The proportion, by weight of total mix, of bitumen shall be stated in the special spec. This shall be termed the nominal binder content. The binder content of the working mix will be instructed by the Engineer following laboratory and site trials.

TABLE 16C-1: REQUIREMENTS FOR DENSE BITUMEN MACAM

	0/40	0/30
Marshall stability (50blows)N	Min 5000	Min 5000
Flow value (mm)	2-5	2-4
Voids in total mix(%)	4-10	4-10
Loss of stability after soaking (ASTM 1075) as % of unsoaked value	Max 35%	Max 35%

1605C MIXING AND LAYING DENSE BITUMEN MACADAM

The temperature of the freshly mixed DBM shall be between 130° and 150°.The minimum temperature at laying and commencement of compaction shall be 120°C and at completion of compaction shall be not less than 90°C.

The requirement regarding laying specified in clause 1609A shall be modified as follows:
Laying plant capable of spreading the mixture over full carriageway width shall be used as much as possible ,otherwise the longitudinal joint shall be compacted before the temparture of the existing lane has dropped to 70°C where 80/100 bitumen is used and to 80°C where 60/70 bitumen is used. This temperature limitation requires the use at least two mechanical pavers working in echelon.

The minimum thickness of compacted layer shall be 60mm when 0/30 aggregate is used and 75mm when 0/40mm is used. No compacted layer shall exceed 100mm thickness when 0/30mm aggregate is used and 125mm when 0/40mm is used.

1606C COMPACTION

Rolling shall be continued until the voids measured in the completed layer are within the appropriate specified range given in table 16C-1.

1607C SEALING OF DENSE BITUMEN MACADAM

DBM coarse shall be sealed by applying the wearing coarse within two weeks of completing any section of base coarse.
If the contractor is unable to comply with this clause he shall apply a temporary single seal surface dressing at his own expense within two weeks.

1608C MEASUREMENT AND PAYMENT

a) **Item: Dense Bitumen Macadam**

Unit: m^3

1700 CONCRETE WORKS

1703 Materials for Concrete

This work shall consist of placing selected approved material of 250 mm minimum diameter on the foundation put after excavation to receive levelling concrete in accordance with these specifications and in conformity with the lines, grades and cross sections shown on the Drawings as directed by the Engineer.

(a) Materials

Selected rock: The selected rock boulders to be placed for this work shall be hard, sound and durable quarry stones as approved by the Engineer. Samples of the stone to be used shall be submitted to and approved by the Engineer before any stone is placed.

The maximum size of the stone boulders shall be 300 mm.

(b) Construction Method

After completion of the structural excavation the surface of the loose soil shall be levelled and compacted. Then the stone of the above sizes shall be placed in one layer of 250 mm over the compacted bed where the bottom slab will rest. Coarse sand shall spread to fill up the voids in the stone boulders, and compaction with vibratory compactors should be performed to make this layer dense whereon a concrete of levelling course shall be placed.

(c) Measurement and Payment

Measurement for the bedding materials shall be made in cubic metres for the completed and accepted work, measured from the dimension shown on the Drawings, unless otherwise directed by the Engineer.

Payment for the bedding Materials for Levelling Concrete Works shall be full compensation for furnishing and placing all materials, all labour equipment, tools and all other items necessary for proper completion of the work in accordance with the Drawings and specifications and as directed by the Engineer.

Add the following for fine aggregate

It shall also meet the following requirements.

Test	Test Method	Requirement
Fineness Modulus	AASHTO M6	2.0-3.5
Sodium Sulphate Soundness loss on 5 cycles	AASHTO T104	10% Max.
Friable particles content	AASHTO T112	1% Max.
Test for organic impurities	AASHTO T21	Lighter than standard
Sand equivalent	AASHTO T17	75% Min.
Fraction passing 75 micron sieve	AASHTO T27	5% by weight max. (10% max. for crusher dust)

Add the following for course aggregate

The coarse aggregate shall conform to the following quality requirements:

Test	Test Method	Requirement
Sodium Sulphate Soundness loss on 5 cycles	AASHTO 104	12% max.
Los Angeles Abrasion	AASHTO T96	40% Max.
Content of Friable Particles	AASHTO T112	1% by weight Max.
Soft Fragments and Shale	AASHTO M80	Max. 5% by weight
Flaky Pieces	BS 812	20% Max.
Elongated pieces	BS 812	20% Max.
Combined quantity of chlorides calculated as sodium chloride and sulphates as sodium sulphate	ASTM D1411	1000 ppm, Max.

Add the following to Clause 1703(g):

The water for mixing and curing concrete shall not contain solids and impurities more than the following permissible limits:

Impurities	Permissible Limits
Organic, mg/l	200
Inorganic, mg/l	3000
Sulphates (as SO_4), mg/l	500
Chlorides (as Cl), for plain cement concrete work and 1000 mg/l for reinforced concrete work mg/l	2000

The pH value of work shall generally be between 6 and 8.

Add the following to Clause 1703:

(iii) Limits for Total Chemical Impurities in concrete

For reinforced concrete work the total chemical impurities collected from aggregates, cement, admixtures and water shall not exceed the following limits:

Impurities	Permissible limits of undesirable chemicals in concrete in percentage by weight of cement
Chlorides (as Cl ion), (%)	0.06
Sulphates (as SO_3), (%)	4.0

1703a Levelling of Concrete for Bottom Slab Including Formwork Cost

This work shall consist of placing and levelling lean or blinding concrete Class 15/20 over the prepared bed of stone boulders in the foundation for bottom slab and wing walls in accordance with these specifications and in conformity with the lines, grades, thickness and typical cross-sections shown on the drawings unless otherwise directed by the Engineer.

(a) Materials for levelling concrete

Requirement for the concrete class 15/20 is specified as follows:

Design compressive strength, 28 days : 15 N/mm^2
Maximum size of coarse aggregate : 20 mm

Maximum cement content : 300 kg/m^3
Maximum water/cement ratio of 50% with slump of 80 mm

(b) Construction Method

The bed of stone boulders upon which the levelling concrete will be placed shall be smooth, compacted and true to the grades and cross-section shall be set to the required lines and grades.

(c) Measurement and payment

Measurement for levelling concrete (Class 15/20) shall be made in cubic metres completed and accepted levelling concrete work measured in place and which has been executed in accordance with the drawings and the Specifications.

Payment for this work shall include furnishing and placing all materials, labour, equipment and tools, and other incidentals to specifications and as directed by the Engineer.

1703b Reinforcement Bars for Walls and Slabs

This work shall consist of furnishing, fabricating and placing in the concrete of the bottom slab, top slab, median wall, sidewalls, wing walls and aprons, reinforcing bars of the quality, type and size in accordance with these specifications and in conformity with the requirements shown on the Drawings.

(a) Material

Reinforcement bars shall be deformed and shall meet the requirements of British Standard BS 4461, unless otherwise called for on the drawings or approved by the Engineer.

No reinforcement bar shall be delivered without a certificate guaranteeing the yield stress. The reinforcement bars shall be kept off the ground, free from dirt, oil, grease, or avoidable rust and stored within a building or provided with suitable covers.

If it is necessary for the Engineer to ascertain the quality of the reinforcement bars, the Contractor shall test the reinforcement bars, at his own expense, by the means as directed by the Engineer.

(b) Construction Method

(i) Bar Bending Schedule

The Engineer shall provide the Contractor with bending schedules showing the location types, sizes, bending dimensions and cut lengths of the reinforcement bars required to be fixed in the works.

(ii) Cutting and bending

Qualified men shall be employed for the cutting and bending and proper application shall be provided for such work.

Bars shall be cut and bent cold to the dimensions indicated and with equipment and methods approved by the Engineer.

Stirrups and tie bars shall be bent around a pin having a diameter not less than 15 times the minimum diameter of the bars. Bends of other bars, where full tension in the bar may occur, shall be made around a pin having a diameter not less than 7.5 times the bar diameter as shown on the drawing.

Reinforcing bars shall be accurately formed to the shapes and dimensions indicated on the Drawings, and shall be fabricated in a manner that will not be injurious to the materials.

(c) Placing

Reinforcing bars shall be accurately placed in proper position so that they be firmly held during placing of concrete.

Bars shall be tied at all intersections by using annealed iron wire 0.9 m or larger diameter or suitable clips.

Distances from the formwork shall be maintained, corrected by means of metal hangers, metal blocks, metal supports or other supports approved by the Engineer.

The Engineer shall inspect the formwork and reinforcement bars after placing. When a long time has elapsed after placing reinforcement bars, they shall be cleaned and inspected again by the Engineer before casting concrete.

(d) Splicing and Joint

When it is necessary to splice reinforcement bars at points, position and methods of splicing shall be determined based on strength calculations and approved by the Engineer.

In lapped splices, the bars shall be lapped by the required length, and wired together at several points by using annealed iron wire larger than 0.9 mm.

When a long time has elapsed after placing reinforcement bars, they shall be cleaned and inspected again by the Engineer before placing concrete.

(e) Joint

Exposed reinforcement bars intended for bonding with future extensions shall be effectively protected from injury and corrosion.

Oxyacetylene welding joint of reinforcing steel shall be carried out only if authorized by the Engineer in writing.

(f) Measurement and Payment

Bending and installation of reinforcement bars of piers and abutments shall be measured in terms of tonnes. The length of steel bar of each size will be shown on the drawings in which the bar length for splicing is excluded. In computing the weight to be measured, the theoretical weights of bars of the cross-section shown on the Drawings or authorized shall be used. These weights are given in the table below.

Bar Type and the Nominal Diameter in Millimetres	Weight of Bar in Kilograms per 12 m length of bar
T10	7.40
T12	10.66
T16	18.95
T20	29.60
T25	46.30
T32	75.80

1703c Formwork for Vertical Walls and Slabs

This work shall consist of all temporary moulds for forming the concrete for culvert walls and slabs together with all temporary construction required for their support. Unless otherwise directed by the Engineer all formwork shall be removed on completion of the walls and slabs.

(a) Materials

Formwork shall be made of wood or metal and shall conform to the shape, lines and dimensions shown on the Drawings.

All timber shall be free from holes, loose material, knots, cracks, splits and warps or other defects affecting the strength or appearance of the finished structure.

Release agents shall be either neat oils containing a surface activating agent, cream emulsions, or chemical agents to be approved by the Engineer.

(b) Construction Method

(i) Formworks

Formwork shall be designed to carry the maximum loads, which may be imposed and so be rigidly constructed as to prevent deformation due to load, drying and wetting, vibration and other causes. After formwork has been set in correct location it shall be inspected and approved by the Engineer before the concrete is cast.

If requested, the Contractor shall submit to the Engineer working drawings of the formwork and also calculations to certify the rigidity of the formwork.

Unless otherwise described in the Contract, all form joints for exposed surfaces of concrete shall form a regular pattern with horizontal and vertical lines continuous throughout each structure and all construction joints shall coincide with these horizontal and vertical lines. PVC pipes of 50 mm diameter for weep holes shall be arranged as shown on the Drawings.

Unless otherwise specified, formwork shall be designed to form chamfers at all external corners whether or not such chamfers are shown on the Drawings to prevent cracks and other damage from arising.

The inside surface of forms shall be cleaned and coated with a releasing agent to prevent adhesion of the concrete. Release agents shall be applied strictly in accordance with the manufacturer's detailed instructions. The release agent shall be applied to the formwork prior to erection. Release agent must not come into contact with reinforcement. Immediately before concrete is cast, the formwork shall be thoroughly cleaned and freed from sawdust, shavings, dust, mud or other debris by hosing with

water. Temporary openings shall be provided in the formwork to drain away the water and rubbish.

(ii) Scaffolding

All scaffolding required to support the formwork shall be designed and constructed to provide necessary rigidity and support the loads without appreciable deflection or deformation.

Details, plans and structural and flexural calculations for scaffolding shall be submitted to the Engineer for approval, but in no case shall the Contractor be relieved of his responsibility for the results obtained by use of these details.

(iii) Removal of formwork

The time at which the formwork is removed shall be the Contractor's responsibility and the formwork shall not be removed until the concrete strength has reached the strength to the approval of the Engineer

(c) Measurement and Payment

No measurement shall be allowed for formwork of temporary construction joints.

Payment for the formwork shall be incidental to the pay items of particular grade of concrete for furnishing, erecting, jointing all the formwork for the concrete including furnishings and applying release agent, and construction of the required scaffolding to support the formwork all conforming to the shape, lines, grade and dimensions of the structure as shown on the Drawings, all in accordance with the Drawings and as directed by the Engineer.

1703d Concrete Works to Vertical Walls and Slabs

This work shall consist of furnishing, mixing, delivering and placing of the concrete for the construction of culvert walls and slabs in accordance with these specifications and in conformity with the requirements shown on the Drawings.

Concrete class 25/20 shall be used for Culvert walls and slabs.

(a) Concrete Materials

(i) Cement:

Cement shall be of Portland type (Strength 42.5) and shall conform to the requirements of BS 12 or equivalent.

The Contractor shall select only one type or brand of cement. Changing of the type or brand of cement will not be permitted without a new mix design approved by the Engineer. All cement is subject to the Engineer's approval. However, approval of cement by the Engineer shall not relieve the Contractor of his responsibility to furnish concrete of the specified compressive strength requirements.

Conveyance of cement by jute bags shall not be permitted. Storage in the Contractor's silo or storehouse shall not exceed more than two (2) months and age of cement after manufacture at mill shall not exceed more than four (4) months. The Contractor shall submit to the Engineer for his approval the result of quality certificate prepared by the manufacturer.

Whenever it is found out that cement has been stored too long, moist or caked, the cement shall be rejected and removed from the project.

(b) **Aggregates**

Fine and coarse aggregates must be clean, hard, strong and durable, and free from absorbed chemicals, clay coating or materials in amounts that could affect hydration, bonding, strength and durability of concrete.

Grading of aggregates shall conform to the requirements in the tables below.

i. Grading of Fine Aggregate

Sieve Size (mm)	Percentage by Weight Passing
10	100
5	89 – 100
2.5	60 – 100
1.2	30 – 100
0.6	15 – 54
0.3	5 – 40
0.15	0 – 15

ii. Grading of Coarse Aggregates

Size Coarse Aggregate	Amounts finer than each standard sieve percentage by weight							
	40	30	25	20	15	10	5	2.5
	100	-	-	90 - 100	-	30 - 69	0 - 10	-

Other requirements for aggregates are as detailed below.

iii. Fine Aggregates

Fitness Modulus, AASHTO	M – 6
Sodium Sulphate Soundness, AASHTO T104:	Max. 10% loss
Content of Friable Particles AASHTO 112:	Max 1% by weight
Sand Equivalent, AASHTO T176:	Min. 75

iv. Coarse Aggregate

Abrasion, AASHTO T96	Max 405 loss
Soft Fragment and shale, AASHTO M80:	Max. 5% by weight
This and elongated Pieces, AASHTO M80:	Max. 15%

v. Water

All sources of water to be used with cement shall be approved by the Engineer. Water shall be free from injurious quantities of oil, alkali, vegetation matter and salt as determined by the Engineer.

vi. Admixture

Only admixture, which have been tested and approved in the site laboratory through trial mixing for design proportion shall be used.
Before selection of admixture, the Contractor shall submit to the Engineer the specific information or guarantees prepared by the admixture supplier. The Contractor shall not exclude the admixture from concrete proportions.

Chemical admixtures where permitted shall conform to the requirements of AASHTO M194. Unless otherwise specified, only Type A (Water reducing), Type B (Retarding), Type D (Water reducing and retarding), Type F (Water reducing, high range) or Type G (Water reducing, high range and retarding) shall be used.

Admixtures containing Chloride ion (Cl) in excess of one percent by weight of the admixture shall not be used in reinforced concrete.

A Certificate of Compliance signed by the manufacturer of the admixture shall be furnished to the Engineer for each shipment of the material used in the works.

(c) Concrete class 25/20

Concrete Class 25/20 shall be used for culvert walls and slabs. The requirements of concrete Class 25/20 are provided as follows unless otherwise the Engineer will designate any alteration.

Design compressive strength, 28 days: 25N/mm2
Maximum size of coarse aggregates: 20 mm
Maximum water/cement ratio of 45% with slump of 80 mm

(d) Proportioning Concrete

The Contractor shall consult with the Engineer as to mix proportions at least thirty (30) days prior to beginning the concrete work. The actual mix proportions of cement, aggregates, water and admixture shall be determined by the Contractor under supervision of the Engineer in the site laboratory.

The contractor shall prepare the design proportions which has 120% of the strength requirement specified for the designated class of concrete.

No class of concrete shall be prepared or placed until its job-mix proportions have been approved by the engineer.

(e) Concrete Work

(i) Batching

Batching shall be conducted by weight with accuracy of:

Cement	:	0.5 %
Aggregate	:	0.5 %
Water and Admixture	:	1 %

Equipment should be capable of measuring quantities within these tolerances for the smallest batch regularly used as well as for larger batches.

The accuracy of batching equipment should be checked every month in the presence of the Engineer and adjusted when necessary.

(ii) Mixing and delivery
Slump of mixed concrete shall be checked and approved at an accuracy of +25 mm against designated slump in these specifications.

(iii) Concrete in hot weather

No concrete shall be placed when the ambient air temperature is expected to exceed thirty three degrees Celsius (33°C) during casting operations.

(iv) Concreting at night

No concrete shall be mixed, placed or finished when natural light is insufficient, unless an adequate approved artificial lighting system is operated; such night work is subject to approval by the Engineer.

(v) Placing

In preparation of the placing of concrete, the interior space of formwork shall be cleaned and approved by the Engineer prior to casting concrete. All temporary members except tie bars to support formwork shall be removed entirely from the formwork and not buried in the concrete. The use of open and vertical chute shall not be permitted unless otherwise directed by the engineer.

The Contractor shall provide a sufficient number of vibrators to properly compact each batch immediately after it is cast in the formwork.

(f) Measurement and Payment

Measurement for the Concrete Works Class 25/20 of culvert walls and slabs shall be made in cubic metres for the walls and slabs actually constructed, measured from their dimensions shown on the drawings. Payment for the Concrete Works (Class 25/20) of culvert walls and slabs shall be the full compensation for furnishings all materials of the concrete mixing, delivering, placing and curing the concrete, equipment and tools, labour and other incidentals necessary for the completion of the work in accordance with the Drawings and these specifications and as directed by the Engineer.

1704 Concrete Works of the Beams and Deck Slabs

1704.1 Description

This work shall consist of furnishing, mixing, delivering and placing of the concrete for the construction of the in situ beams and deck slab, including form F3 type finish, in accordance with Standard Specifications and in conformity with the requirements shown on the Drawings.

Concrete Class 30/20 shall be used for beams and slabs.

1704.2 Concrete materials

(a) Cement

Cement shall be of Ordinary Portland (Strength 42.5) type and shall conform to the requirements of BS or equivalent.

The Contractor shall select only one type or brand of cement or others. Changing of the type of cement will not be permitted without a new mix design approved by the Engineer. All cement is subject to the Engineer's approval. However, approval of the cement by the Engineer shall not relieve the Contractor of the responsibility of furnishing concrete of the specified compressive strength requirements.

Conveyance of cement by chute bags shall not be permitted. Storage in the Contractor's silo or store house shall not exceed more than two (2) months, and the age of cement after submitting to the Engineer the result of quality certificate prepared by the manufacturer for his approval.

Whenever it is found out that cement have been stored too long, moist, or caked, the cement shall be rejected and removed from the project.

(b) Aggregates

Fine and coarse aggregates must be clean, hard, strong and durable, and free from absorbed chemicals, clay coating, or materials in amounts that could affect hydration, bonding, strength and durability of concrete. The aggregates should conform to BS 882.

Grading of aggregates shall conform to BS 812.

Other requirements for aggregates are as given below.

(i) Fine Aggregates

Fitness Modules	AASHTO M-6	2.3 to 3.1
Sodium Sulphate Soundness	AASHTO T104	Max. 10% loss
Content of Friable Particles	AASHTO 112	Max. 1% by weight
Sand Equivalent	AASHTO T176	Min.75

(ii) Coarse Aggregate

Abrasion	AASHTO T96	Max. 405 loss
Soft Fragment and Shale	AASHTO M80	Max. 5% by weight
Thin and elongated pieces	AASHTO M80	Max. 15%

(c) Water

All sources of water to be used with cement shall be approved by the Engineer. Water shall be free from injurious quantities of oil, alkali, and vegetable matter and salt as determined by the Engineer.

(d) Admixture

Only admixture which have been tested and approved in the site laboratory through trial mixing for design proportion shall be used.

Before selection of admixture, the Contractor shall submit to the Engineer the specific information or guarantees prepared by the admixture supplier.

The Contractor shall not exclude the admixture from concrete proportions.

1704.2.1 Concrete class 30/20

Concrete Class 30/20 shall be used for in situ beams and deck slabs. The requirements of concrete Class 30/20 are as detailed below unless otherwise the Engineer will designate any alteration.
Design compressive strength, 28 days: 30N/mm2
Maximum size of coarse aggregates: 20 mm
Minimum cement content: 300 kg/m3, and
Maximum water/cement ratio of 45% with slump of 80 mm

1704.2.2 Proportioning Concrete

The Contractor shall consult with the Engineer as to the mix proportions at least thirty (30) days prior to beginning the concrete work. The actual mix proportions of cement, aggregates, water and admixture shall be determined by the Contractor under supervision of the Engineer in the site laboratory.
The contractor shall prepare the design proportions which has 120% of the strength requirements specified for the designated class of concrete.

No class of concrete shall be prepared or placed until its job-mix proportions have been approved by the Engineer.

1704.2.3 Concreting Work

(a) Batching

Batching shall be conducted by weight with accuracy of

Cement: ½ %
Aggregate: ½ %
Water and Admixture: 1%

Equipment should be capable of measuring quantities within these tolerances for the smallest batch regularly used as well as for larger batches.

The accuracy of batching equipment should be checked every month in the presence of the Engineer and adjusted when necessary.

(b) Mixing and Delivery

Slump of mixed concrete shall be checked and approved against designated slump in these specifications. The time elapsing from when the water is added to the mix until the concrete is deposited in place at the site of the work shall not exceed thirty (30) minutes in case that the concrete is hauled in non agitative type trucks or carriers, or more than sixty (60) minutes in case that it is hauled in truck mixers or other carriers with agitators.

(c) Concrete in Hot Weather

No concrete shall be placed when the ambient air temperature is expected to exceed thirty three degrees Celsius (33^{0}C) during casting operations.

(d) Concreting at Night

No concrete shall be mixed, placed or finished when natural light is insufficient unless an adequate approved artificial lighting system is operated, and such night work is subjected to approval by the Engineer.

(e) Placing

In preparation of the casting of concrete, the interior space of formwork shall be cleaned and approved by the Engineer prior to casting concrete. All temporary members except tie bars to support formwork shall be removed entirely from the formwork and not buried in concrete. The use of open and vertical chute shall not be permitted unless otherwise directed by the Engineer. The Contractor shall provide a sufficient number of vibrators to properly compact each concrete batch immediately after it is cast in the formwork.

1704.3 Concrete class 35/20

Concrete Class 35/20 shall be used for in situ beams and deck slabs. The requirements of concrete Class 35/20 are as detailed below unless otherwise the Engineer will designate any alteration.

Design compressive strength, 28 days: $35N/mm^2$
Maximum size of coarse aggregates: 20 mm
Minimum cement content: $300\ kg/m^3$, and
Maximum water/cement ratio of 45% with slump of 80 mm

1704.4 Measurement and Payment

Measurement for the Concrete Works for beams and deck slabs shall be made in cubic metres for the walls and slabs actually constructed, measured from their dimensions shown on the Drawings. Payment for the concrete works of beams and deck slabs shall be full compensation for furnishing all materials of the concrete mixing, delivering, placing and curing the concrete, equipment and tools, labour and other incidentals including form F3 type, necessary for the completion of the work in accordance with the Drawings and these specifications and as directed by the Engineer.

1705 Mixing Concrete

Add the following to Clause 1705 of the Standard Specification.

Mixed concrete from the central mixing plant shall be transported in truck mixers, truck agitators, or other approved containers. The time elapsing from the time water is added to the mix until the concrete is deposited in place at the site of the work shall not exceed 30 minutes when the concrete is hauled in non-agitating trucks, or more than 90 minutes when hauled in truck mixers or truck agitators.

Where concrete is supplied from a central plant, there shall be sufficient transporting equipment to ensure continuous delivery at the rate required. The rate of delivery shall be such as to provide for the proper handling, casting, and finishing of the concrete. The method of delivery and handling the concrete shall be in a way which will facilitate casting with a minimum of re-handling and without damage to the structure or the concrete. The methods of delivery and handling for each site shall be approved by the Engineer. The Engineer may suspend the mixing and casting of concrete at any site for which he considers the Contractor's delivery equipment inadequate until such a time as the Contractor provides additional approved delivery equipment.

Concrete shall be allowed to be placed only when the Engineer or his representative is present at the site and has previously checked and approved in writing the positioning, fixing and condition of the reinforcement, and the alignment and suitability of the formwork.
Concrete shall be placed so as to avoid segregation of the materials and displacement of the reinforcement. When casting involves dropping the concrete by more than 1.5 metres, it shall be conveyed through sheet metal troughs, chutes or other approved pipes. The chutes, troughs and pipes shall be kept clean and free from coating of hardened concrete by thoroughly washing with water after each operation.

Rename Clause 1740 as 1740.1 and add the following to this clause:

1740.2 Interlocking Concrete Paving Block

(a) Quality

The block for the paving works shall be as shown on the drawings and as directed by Engineer. The blocks shall be 60 mm thick of quality concrete class of such that yields the strength of 50 N/mm2, having specified the size and type with grey or red or combination of them.

Grading of sand for bedding			Grading of sand for the joint filling	
Sieve Size (mm)	Percentage Passing		Sieve Size (mm)	Percentage Passing
9.52	100		2.36	100
4.75	95 – 100		1.18	90 – 100

Grading of sand for bedding			Grading of sand for the joint filling	
Sieve Size (mm)	Percentage Passing		Sieve Size (mm)	Percentage Passing
2.36	90 – 100		0.6	60 – 90
1.18	50 – 95		0.3	30 – 60
0.6	25 – 60		0.15	10 – 30
0.3	10 – 30		0.075	0 – 10
0.15	0 – 15			
0.075	0 – 10			

(b) Foundation of Paving Blocks

Over the prepared and consolidated sub-grade a layer of Sub-base using crushed aggregate shall be laid to falls and slopes to a compacted thickness of 100 mm and compacted with C-10 tonne roller. Over the prepared sub-base, a layer of 3 mm and down fine sand shall be laid and compacted to 25 mm in thickness and to required falls and slope to the satisfaction of the Engineer.

(c) Paving Blocks Laying

The blocks shall be laid on top of the prepared base in required pattern as directed by the Engineer. On completion of the laying work, approved fine screened sand shall be spread over the paving and the joints filled with fine sand compacted as directed by the Engineer. Extra sand on the surface shall be removed by brushing. When required, the edge blocks shall be cut clean and sharp with approved tools and as per the manufacturer's instructions. The cut edges shall be rubbed smooth before laying. Compaction with a power vibrating plate (Wacker model VPH 70) shall be used suitably as recommended by the approved proprietary manufacturer. Any blocks damaged during laying shall be replaced. The entire work of the installation and materials shall meet the approval of the Engineer.

1741 Measurement and Payment

Delete Clause 1741(c).

Add the following to Clauses 1741 (d), (e) and (f):

Read Clause 1741(l) as follows:

The precast unit of measurement shall be m3 of particular grade of concrete.

Add the following to this section:

1742 Plant and Equipment for Aggregates and Concrete

1742.1 Aggregate Processing Plant

Aggregate processing plant to be provided by the Contractor shall conform to the following:

(a) Type of Plant

Except where aggregates are supplied from commercial sources, a modern and dependable aggregate plant capable of producing satisfactory concrete aggregates in sufficient quantities and the rate necessary to meet the requirements of the construction schedule shall be provided at a location acceptable to the Engineer. Complete facilities shall be provided for proper crushing, washing, classifying, storing, reclaiming and delivering the aggregates to the mixing plant.

(b) Samples and Test

The aggregate plant shall be operated for a sufficient time in advance of the dates set for first placement of concrete to permit the development of procedures which result in high capacity production of aggregates proven by tests to meet all the requirements of this specification.

(c) Fines in Sand

The facilitation for fine aggregate production shall be so designed and operated as to retain the necessary quantity of finer fractions. An excess of fines will not be permitted. If natural sand is from marine source, the sand shall be cleaned of clayey material and washed with potable water before use. All crushing, washing, screening, classifying, blending, batching, or other properties of fine aggregate necessary to meet these specifications shall be performed so as to produce acceptable gradation complying with this specification.

(d) Drainage of Sand

Aggregates shall not be removed directly from the washing or classifying operations to the aggregate bins in the concrete mixing plant, but shall be stored as required, to permit drainage of excess water and in such a manner as to avoid contamination by foreign materials. Sand shall remain free-draining storage for at least 48 hours prior to use.

(e) Segregation

The stockpiles for aggregates shall be formed so as to prevent segregation, and as approved by the Engineer. The deposition and removal thereof shall be conducted in a manner to maintain the uniformity of grading. The side slopes of stockpiled aggregates shall be kept flatter than the angle of repose to prevent accumulation of coarser material at the bottom of the slope.

(f) Volume of Storage

Sufficient live storage of all size fractions of processed aggregates shall be maintained at all times, to permit continuous placing of concrete at the rates so as to meet the scheduled requirements. If aggregates are stockpiled on the ground, the bottom portion of the stockpile within 300 mm of ground shall not be used. The Contractor may also plan to store sufficient quantity of coarse and fine aggregate so that concreting during the rains can proceed without hindrance as the collection of the same during the rains may be difficult.

(g) Approval of Aggregate Plant Layout

Plans and written specifications for the aggregate processing plant including description and capacity data on the processing equipment, and flow charts of the whole processing operation which shall show rates of flow of material at the various crushing and separation points in the processing, as well as the volumes of the stockpiles and the number and types of equipment to be used in transporting the aggregates from aggregate plant to the mixing plant, shall be submitted to the Engineer in advance of plant erection for his approval.

1742.2 Concrete Plant

A modern dependable batch type mixing plant capable of producing concrete of specified quality and at the rate of output required to meet the specified requirements, and a balanced complement of transporting, handling and placing equipment shall be provided at locations and in a manner approved by the Engineer. The concrete mixing plant shall be completely installed for a sufficient length of time prior to scheduled date for placement of first concrete, to enable the Engineer to make the necessary physical tests, prior to use of the plant for the production of concrete.

(a) Standby Arrangement

As a standby arrangement to the batching and mixing plant, the stationary mixer/mixers of capacity 700 litres of mixed concrete and other appropriate equipment shall be provided.

(b) Type of Plant

The type of plant to be furnished shall be fully automatic. The term "automatic" is used to define a plant in which:

(i) Batch weights are set manually on a mix selector
(ii) Mixes are charged automatically by mix selector
(iii) Materials are batched automatically

Ice flaking machine of sufficient capacity shall be installed as a part of batching plant.

(c) Batchers

Individual weigh batchers shall be provided for all works, requiring the use of more than two separate size groups of coarse aggregates. Cumulative weight batchers may be used for work requiring the use of not more than two separate size groups of coarse aggregates provided that the cement is weighed and batched separately from the aggregates. The batchers shall be arranged to permit the convenient addition or removal of material. Batching equipment shall be so constructed and arranged that the sequence and time of discharge can be controlled to produce a re-blending and mixing of the aggregates and, wherever possible, mixing of the cement with the aggregates as the materials pass through the charging hopper in to the mixer. This control shall be effected by the controls of the batcher discharge gates. Batcher controls shall be so interlocked that a new batching cycle cannot be started until all batchers are completely empty.

(i) Weighing Units

Every delivering point of aggregates and cement into the mixer, charging hopper shall have a weighing unit and each weighing unit shall include a visible, springless direct reading dial which shall indicate the scale load at all stages of the weighing operation from zero to full capacity.

The scale dials and the weighing equipment shall be in full view of the operator, so that he may conveniently observe the operation of the batcher gates and the discharge of the materials. Provision shall be made for adjustment and change in weights of materials being charged in the hopper.

(ii) Measuring Water

Water shall be measured by weight except in situations for which written approval is given by the Engineer to measure by volume. The mechanism for measuring and delivering water to the mixers shall not permit leakage when the valves are closed.

The filling and discharge shall be measured by weight. The filling shall be capable of ready adjustment to permit varying the quantity of the admixtures to be batched. The equipment shall be kept in a clean and fully operating condition.

(iii) Tolerance in Batching

Weighing devices shall be capable of measuring the various ingredients of the following accuracy.

Materials	Percent (by weight)
Cement	1
Water	1
Aggregate smaller than 40mm size	2
Admixture	1 (or volume)

(iv) Records & Charts

An accurate record shall be maintained at the batching plant by the Contractor for the following:

(a) The weight of the cement, water and admixture
(b) The weight of the aggregate for each size shall be recorded separately.
(c) Temperature of the concrete immediately after mixing
(d) Mixing time of each batch when all the materials are loaded into the mixer
(e) Time when the concrete is delivered from the mixer
(f) Ambient temperature

(v) Recorders

A recorder shall be provided for each set of units measuring each of the materials delivered to the mixer. The recorder shall produce a continuous visible record, on a single ruled chart, of the weight of the cement, water and each size of aggregates, of the mixing time of each batch after all materials are in the mixer, of the temperature of the concrete and of the time of day at intervals of not more than fifteen (15) minutes. The recorder shall be completely housed and shall be capable of being locked and shall be placed in a position convenient for observation by the plant operator and the Engineer. Each chart shall be so ruled and printed that it may be readily and permanently identified, so that the quantities and time may be read directly without scaling or calculation. A portion of the recorder chart equivalent to at least thirty (30) minutes of plant operation shall be visible after recording. This portion of the chart shall be supported over its entire width on a smooth, firm backing so that notes can be made without puncturing the paper. The recorders and scale dials shall be housed in a room, box or compartment visible at all

times and sufficiently tight to exclude objectionable dust coming from the plant operation.

1900 STRUCTURAL STEELWORK

1901 GENERAL

The steel sections will meet the conditions for structural steel in section 19 of the Standard specification.

The material requirements will be as the per designer's manual, manufacturer's instructions

2000 ROAD FURNITURE

2001 Road Reserve Boundary Posts

The Contractor shall establish a reference point on top of each boundary post.

2004 Permanent Road Signs

Rename the existing text with the heading "2004.1 Posts and Road Signs"

2004.1 Posts and Road Signs

Posts for road signs shall be vandal-proofed by the drilling of 3 mm diameter holes at 100 m centres on alternative sides.

Add the following to this clause:

2004.2 Colour and configuration

The colour, size and location of all traffic signs for the project road shall be as specified on the drawings and in the absence of any details or any missing details, the signs shall be provided as directed by the Engineer.

The sign shall be reflectorised as shown on the drawings or as directed by the Engineer. The signs shall be of retro-reflective type and made of prismatic reflected sheeting fixed over aluminium sheeting as per these specifications.

The cautionary and mandatory signs shall be fabricated through the process of screen-printing. With regard to informatory signs with inscriptions, the message shall be of cut out letters made in the transparent overlay film pasted over the base sheeting with pressure sensitive adhesive or as the base sheeting with pressure sensitive adhesive or as instructed by the manufacturers or as directed by the Engineer.

2004.3 Material

The various materials and fabrication of the traffic signs shall conform to the following requirements:

a) Concrete

Concrete shall be of the grade shown on the Contract drawings or otherwise as directed by the Engineer.

b) Reinforcing Steel

Reinforcing steel shall conform to the requirement of the relevant codes as directed by Engineer unless otherwise shown on drawing.

c) Bolts, nuts, washers

High strength bolts, precision bolts and nuts shall conform to the relevant specifications. The bolts and nuts shall be galvanised (zinc coated, 0.55 kg/m^2 minimum single spot) and galvanising shall conform to the relevant specifications.

d) Plates and supports

Plates and support sections for the signposts shall conform to the relevant specifications. The plates and supports shall be galvanised (zinc coated, 0.55 Kg/m^2. minimum single spot.) and galvanising shall conform to the relevant specifications.

e) Aluminium

Aluminium sheets used for sign boards shall be of smooth, hard and corrosion resistant aluminium alloy conforming to the relevant specification. The back of the sheet shall be painted with two coats of Epoxy paint.

The thickness of the sheet shall be 3 mm for all types of signs.

2004.4 Structural Details

The structural details for supports shall be as per the Contract drawings and/or as directed by the Engineer.

2004.5 Retro-reflective Sheeting

(a) General Requirements

The retro-reflective sheeting used on the sign shall consist of the white or coloured sheeting having a smooth outer surface, which has the property of retro-reflective over its entire surface. It shall be unused and shall show no evidence of cracking, scaling, pitting, blistering, edge lifting or curling and shall have negligible shrinkage or expansion. A certificate of having tested the sheeting for these properties in an unprotected outdoor exposure facing the sun for two years and its having passed these tests shell be obtained from a reputed laboratory of the manufacturer of the sheeting, for each lot separately.

The reflective sheeting shall be of prismatic lens type OF ASTM - Type-IX.

(b) Lens Type

The retro-reflective sheeting shall be of Prismatic lens type, consisting of cube corner lenses and pressure sensitive adhesive and should be applied to the sign substrate at room temperature of 18 °C, transparent, waterproof plastic having smooth surface. The coefficient of retro-reflective as determined in accordance with ASTM Standard E- 810 shall give the minimum values as indicated in table given below.

Minimum Coefficient of Retro-reflection for Retro-reflective sheeting Prismatic Lens Type (candelas/lux/m2)

Obtuse Angle (°)	Entrance Angle (°)	White	Yellow	Green	Red	Blue
0.1	-4	660	500	66	130	30
0.1	+30	370	280	37	74	17
0.2	-4	380	285	38	76	17
0.2	+30	215	162	22	43	10
0.5	-4	240	180	24	48	11
0.5	+30	135	100	14	27	6
1.0	-4	60	60	8	16	3.6
1.0	+30	45	34	4.5	9	2

When totally wet, the sheeting shall not show less than 90% of the values of retro-reflectance indicated in table above. At the end of 7 years, the sheeting shall retain at least 75% of its original retro-reflectance.

2004.6 Messages and Borders

The messages (legends, letters and numerals) and borders of Cautionary/Regulatory sign boards shall be screen printed. Screen printing shall be processed and finished with materials in a manner specified by the sheeting manufacturer and shall be bonded with the sheeting in the manner specified by the manufacturer.

The messages (legends, letters and numerals) and borders of information signs shall be of cut letters made in transparent overlay film pasted over the base sheeting with pressure sensitive adhesive or as instructed by the manufacturers or as directed by the Engineer.

For screen printed transparent coloured areas on white sheeting, the co-efficient of retro-reflection shall not be less than the values of corresponding colour in the table above.

Cut-out messages and borders, wherever used, shall be made in transparent film applied on base sheeting with pressure sensitive adhesive with the coefficient of retro-reflection which shall not be less than the values of corresponding colour in the table above. For the background colour of the sign the coefficient of retro-reflection shall not be less than that specified in the table above for the respective colours.

2004.7 Colour

The colour shall be as specified and shall conform to the requirements of the table below. Conformance to colour requirements shall be determined spectrophotometrically in accordance with ASTM E 1164, with instruments utilizing either 45/0, or 0/45 illumination/viewing conditions and tolerances as described in ASTM E 1164 for retro-reflective materials.

Conformance to Colour Requirements

								Reflectance Limit (y)		
Colour	x	y	x	y	x	y	x	y	Min	Max.
White	.30	.3	.35	.35	.33	.37	.28	.32	40.0	
Yellow	.48	.42	.54	.45	.46	.53	.42	.48	24.0	45.0
Red	.69	.31	.59	.31	.56	.34	.65	.34	3	15
Blue	.07	.17	.15	.22	.21	.16	.13	.03	1.0	10.0
Green	.03	.39	.16	.36	.28	.44	.20	.79	3.0	9.0

The four pairs of chromaticity coordinates determine the acceptable colour in terms of CIE 1931 standard colorimetric system measured with standard illumination source D65. These colours are equivalent to those listed in ASTM D4956 using source C.

The colour shall be durable and uniform in acceptable hue when viewed in daylight or under normal headlights at night.

2004.8 Adhesives

The sheeting/film shall have a pressure sensitive adhesive of the aggressive tack type requiring no heat, solvent or other preparation for adhesion to a smooth clean surface. The adhesive shall be protected by an easily removable liner (removable by peeling without soaking in water or other solvent) and shall be suitable for the type material of the base plate such that it shall not be possible to remove the sheeting from the sign base in one piece by use of sharp instrument. The adhesive shall form a durable bond to smooth, corrosion and weather resistant surface of the base plate. In case of pressure sensitive adhesive sheeting, the sheeting shall be applied in accordance with the manufacturer's specifications.

2004.9 Fabrication

The surface to be reflectorised shall be effectively prepared to receive the retro-reflective sheeting. The aluminium shall be de-greased either by acid or hot alkaline etching and all scale/dust removed to obtain a smooth plain surface before the application of retro-reflective sheeting. If the surface is rough, approved surface primer may be used. After cleaning, the metal shall not be handled, except by suitable device or clean canvas gloves, between all cleaning and preparation operation and application of reflective sheeting/primer. There shall be no opportunity for the metal to come in contact with any contaminants prior to the application of retro-reflective sheeting.

Complete sheets of the material shall be used on the signs except where it is unavoidable. At splices, sheeting with pressure sensitive adhesives shall be overlapped not less than 5 mm. Where screen printing with transparent colours is proposed, only butt jointing shall be used. The material shall cover the sign surface evenly and shall be free from twists, cracks and folds. The transparent overlay film in which cut-out messages have been made shall be bonded with sheeting in the matter specified by the manufacturer.

2004.10 Warranty and Durability

The Contractor shall obtain from the manufacturer a seven-year warranty for satisfactory field performance including stipulated retro-reflectance of the retro-reflective sheeting of Prismatic lens type and that of transparent film and submit the same to the Engineer. In addition, a seven-year warranty for field satisfactory performance of the finished signs with retro-reflective sheeting of Prismatic lens type, inclusive of the screen printed or cut out letters/legends, transparent film and their bonding to the retro-reflective sheeting shall be obtained from the contractor/Supplier and submitted to the Engineer. The Contractor/Supplier shall also furnish a certification that the signs and materials supplied against the assigned work meets all the stipulated requirements and carry the stipulated warranty.

Warranties shall be given in original and shall have legal jurisdiction in Kenya. Warranties given by power of attorney holders will not be acceptable.

Processed and applied in accordance with recommended procedures, the reflective material shall be weather resistant and, following cleaning, shall show no appreciable discoloration, cracking, blistering or dimensional change and shall not have less than 50 % of the specified minimum reflective intensity values, given in the table under Clause 2004.4 (b) above, when subjected to accelerated weathering for 1000 hours, using type E or EH weatherometer (AASHTO Designation M-268).

2004.11 Installation

Sign posts, their foundation and sign mountings shall be so constructed as to hold these in a proper and permanent position. Sign supports shall be of galvanised structural steel and shall be firmly fixed to the ground by means of properly designed foundation or as shown on the Contract Drawings. The work of the foundation shall conform to the relevant clauses of the Standard Specification.

All components of the signs and supports, excluding the back side of aluminium sheet and the reflective portion, shall be thoroughly scaled, cleaned and galvanised (zinc coated, 0.55 Kg/m^2. minimum single spot.) and shall conform to the relevant specifications.

The signs shall be fixed to the posts by welding and/or bolts and washers as shown on the drawing. After the nuts have been tightened, the tails of the bolts shall be furred over with a hammer to prevent removal.

2004.12 Foundation for Support

The foundation for the supports of the sign boards with single support shall be by making excavation in all type of strata to the sizes and level as shown on the relevant drawings and fixed with class 20/20 cement concrete during installation.

The foundation for the supports of the sign boards with two or more supports shall be made by boring holes in all types of strata to the sizes levels as shown on the relevant drawings and fixed with class 20/20 cement concrete during installation. All concrete works shall be carried out as per the relevant specifications.

2004.13 Measurement for Payment

The measurement of standard cautionary and mandatory sign boards shall be in numbers of sign boards supplied and fixed and this shall constitute full payment for the supply of all materials for the sign board and its supports and foundations, fabrication and installation in the ground or embankment as per the specifications. Informatory sign boards with board area exceeding 1.0 m^2. shall be measured by area of the reflectorised sheet in square meters.

2004.14 Rate

The Contract unit rate shall be payment in full for the cost of making the road sign including supports and foundations, including all materials, installing it at the site and incidentals to complete the work in accordance with the specifications. In case of overhead sign boards supported on overhead gantry the rate shall not include the support gantry, its foundation and erection which shall be paid separately.

2005 Road Marking

Road marking paints shall be hot applied thermoplastic materials as specified under Clause 219 of the Standard Specification.

2006 Guardrails

Add the following to this clause:

2006.1 Removing, Renovating and Re-erecting Guardrails

Where the existing guardrails have to be removed, or removed and re-erected, or removed, renovated and re-erected, the three processes of removal, renovation and re-erection shall be carried out as follows:

(a) Removing the Guardrails

All guardrails and end units shall be loosened. Posts shall be carefully dug out and the holes shall be filled and compacted in 150 mm layers. Items used for fixing, including bolts, nuts, washers, shall be placed in bags, after which all materials shall be transported to a store approved by the Engineer and all stored in-groups by type.

Where material is intended for re-use, it shall first be unpacked for inspection by the Engineer. The Engineer will decide which material that shall be disposed off if, on inspection it is found unsuitable for re-use.

(b) Renovating the Guardrails

Guardrails and end pieces suitable for re-use shall be taken to the workshop for cleaning and painting. Rust and the existing paint shall be completely removed and minor indentations hammered out. The guardrails shall receive surface treatment in accordance with Clause 2006 of the Standard Specification.

Timber posts suitable for re-use shall be cleaned and treated with an approved timber preservative. Bolts nuts and washers to be re-used shall be cleaned and all dust removed, and shall then be oiled.

(c) Re-erection

The guardrails shall be erected in positions as shown and all the removed materials suitable for re-use and as much supplementary new materials as may be necessary shall be used. Re-erection shall be as specified for new guardrails.

2006.2 Pedestrian Railing

Pedestrian safety barriers shall comply with the requirement of BS 3049. The steel tubing and wire mesh shall be primed with zinc chromate or equal suitable for galvanizing, undercoat and finished with not less than two coats of permanent outdoor enamel of white paint.

2007 Kerbs

Name the existing text with the head as "2007.1 Installation".

Add the following to this clause:

2007.2 Existing Kerbs

Where shown on the drawing or directed by the Engineer, the Contractor shall remove the existing road kerbs and channel, including bed and haunches. Care shall be taken to minimize over break into the existing pavement. The Contractor shall reinstate any over break with a lean concrete or such other materials as may be approved by the Engineer.

2007.3 Repair of Damaged Railing and Kerbs

The repair of damaged railing shall be done by replacement of damaged pipes and posts.
The damaged kerbs shall be repaired by cement mortar.

(a) Materials as per Relevant Codes

Ordinary Portland cement
Coarse aggregate and fine aggregate
Tor steel
Water suitable for concreting
MS steel sections and pipes
Zinc rich epoxy primer like Nitrozinc primer or any approved equivalent and epoxy coal tar.

(b) Equipment

(i) Welding equipment
(ii) Painting/white washing brushes
(iii) Other miscellaneous equipment

(c) Procedure

The damaged portion of steel/RCC rating shall be removed up to the unaffected portion of the railing and the parent remaining parts which have to be connected with new components shall be thoroughly cleaned.

In case of RCC railing, the casting of new units shall be carried out by adopting standard practice of construction using all necessary care. The newly constructed RCC components shall be cured as per standard practice of curing by water. The dried up and cured concrete shall be white/colour-washed with proper care to match with the existing colours.

In case of MS pipe railing, the new components or repaired components shall be fixed with necessary care keeping in consideration the alignment and level. The railing components shall

then be painted with zinc rich epoxy based primer and finishing with two coats tar epoxy or paint to match the existing colour including cleaning and surface preparations as directed by the Engineer.

The damaged kerbs shall be repaired with cement mortar and the cement mortar shall be cured as per the standard practice. The kerbs shall then be painted black and yellow in alternative bands with reflecting paint of specification and quality approved by the Engineer to give an even shade on work as per the Standard Specification.

2010 Trees

Add the following to Clause 2010 of the Standard Specification:

2010.1 Plantation of Trees and Hedges

(a) Scope

The work shall consist of:

- Planting of tree saplings in median or other designated locations, and
- Planting of hedges within median area.

(b) Materials

(i) Dump Manure

Dump manure shall be of well decayed (at least six months) organic or vegetable matter, obtained in the dry state from the municipal dump or other similar sources approved by the Engineer. The manure shall be free from earth, stone, brickbats or other extraneous matter.

(ii) Farmyard Manure

Farmyard Manure shall be well decayed (should be at least 6 months covered in dump), free from grits and any other unwanted materials.

(iii) Good Earth

The soil shall be agricultural soil of sandy-loam texture, free from grit, marrum, shingle, stone, brickbats, building rubbish and any other foreign matter. The earth shall be free from clods or lumps of sizes bigger than 75 mm in any direction. It shall have PH value ranging between 6 and 8.5.

(iv) Oil Cake (Neem/Castor/Groundnut)

The cake shall be free form bush, dust, grit and any other foreign matter.

(v) Sapling of Trees

The sapling of trees shall be of medium height, leafy type and draught resistant variety native to the area and be of good quality of minimum of 2 m height or calliper diameter of 25 mm as directed by the Engineer.

(vi) Sapling of Hedges

The saplings shall be of draught resistant variety normally grown for hedges in the area, approved by the Engineer.

(c) Construction Operations

(i) Tree Planting and Refilling Earth after Mixing with Oil Cake, Manure and Watering

Holes of circular shape of 900 mm diameter and 1000 mm in depth in ordinary soil shall be excavated and the excavated soil, broken to clods of sizes not exceeding 75 mm in any direction, shall be stacked outside the hole. Stones, brickbats, unsuitable earth and other rubbish, all roots, weeds and other undesirable growth encountered during excavation shall be separated out and unserviceable material removed from the site as directed by the Engineer.

Useful material, if any, shall be stacked properly and separately. Good earth in quantities required to replace such discarded stuff shall be brought and stacked at site by the Contractor, with a depth not more than 500 mm from ground level. The pit shall be treated for termite by raking the soil up to 50 mm and treated with 5% Aldrin or Chloradang dust in soil.

The tree hole shall be manured with powdered neem/castor oil cake along with farm yard manure/dump manure screened through 16 mm sieve and these shall be uniformly mixed with the excavated top soil after the manure has been broken down to powder (size of particles not to exceed 6 mm in any direction) in equal proportion. A 2 m high sapling of trees shall be placed at the centre of the hole and then the mixture shall be filled into the hole up to the level of adjoining ground and then profusely watered to enable the soil to subside. The refilled soil shall then be dressed evenly with its surface about 50 mm to 75 mm below the adjoining ground level or as directed by the Engineer.

The planting shall be completed soon after completion of the median.

(ii) Circular Mild Steel Tree Guard with Bars

The tree guard shall be 900 mm in diameter.

The tree guards shall be formed of:

- 3 № 25 mm x 25 mm x 3 mm angle iron verticals 1.95 m long excluding splayed outward at lower end up to an extent of 50 mm
- 3 № 25 mm x 5 mm MS flat rings fixed as per the design
- 5 № 1.55 m long 6 mm diameter bars. Each ring shall be in two parts in the ratio of 1:2 and their ends shall be turned in radically for a length of 40 mm at which they are bolted together with 8 mm diameter and 30 mm long MS bolts and nuts.

The vertical iron shall be welded to rings along the circumference with electric plant. 15 № bars shall be welded to rings at equal spacing along the circumferences of ring. The lower end of the angle iron verticals shall be splayed outwards up to an extent of 50 mm. The lower end of the flat of lower ring shall be at the height of 1.95 m. The middle ring shall be in the centre of top and lower ring. The bars shall be welded to the rings as directed by the Engineer. The entire tree guard shall be given two coats of paint of approved brand and of required shade over a priming coat of ready mixed primer of approved brand. The design of the tree guard shall be approved by the Engineer.

(iii) Planting of Hedges

The hedges saplings shall be planted in two rows, one each along each edge of the median. Bed for the saplings shall be prepared with necessary manuring, and the live saplings shall be planted in lines parallel to the median edge to the directions of the Engineer. Spacing between saplings in a row shall be such that a thick hedge can be grown, and this shall generally be not farther away than 300 mm.

The planting shall be completed soon after completion of the medians.

(iv) Grassing of Median Area

The area of the median between the hedges shall be seeded and mulched to develop grass cover as directed by Engineer.

(d) Maintenance

The saplings of trees and hedges planted shall be watered and maintained by the Contractor till issuance of the final certificate at the end of the Defects Liability Period. This shall also include watering, weeding out of undesirable plants and replacement of dead plant, manuring and trimming of the hedges.

Add the following clauses to this section:

2012 Service Ducts beneath Roads

Where instructed by the Engineer, the Contractor shall construct service ducts beneath the carriageway and shoulders/footpaths. The ducts shall consist of 100 mm to 300 mm diameter ogee precast concrete pipes surrounded by a minimum of 100 mm thickness of Class 15/20 concrete. The minimum clearance between the road formation and the top of the concrete surround shall be 100 mm.

The ducts shall be provided with draw cords fabricated from strong man-made fibre such as nylon and each duct shall be sealed at each end with a tight-fitting plastic plug. In the existing pavement, the duct shall be at least 250 mm below the road surface measured from the top of the concrete pipes and all back filling shall be in Class 15/20 concrete. The concrete pipes shall conform to the requirements of Clause 215 of the Standard Specification.

2013 Duct Markers

Duct markers shall be installed by the Contractor at each end of the services ducts provided under Clause 2012 above. The duct marker shall be located immediately beyond the outer edge of the shoulder or footpath and as close to the line of the duct as physical constraints permit. Where several ducts are laid side by side, only one duct marker post will be necessary. The duct marker posts shall be constructed as shown on the drawings and shall be clearly and durably marked on the side facing away from the road. The marker shall be inscribed 'X DUCTS' where X is the number of ducts stated in the group marked by the marker posts.

2014 Road Bump and Rumble Strips

Where shown on the Drawings or instructed by the Engineer, the Contractor shall provide, place trim to line and level bumps and/or rumble strips on the carriage way, connecting roads or shoulders. Where instructed, the road bumps shall extend the full width of carriageway and shoulders. The bumps shall be constructed in asphalt concrete to the dimensions shown on the Drawings and to the same standard as the wearing course on the main carriageway.

2015 Bollards

Where shown on the Drawings or instructed by the Engineer, the Contractor shall construct permanent bollards. The bollards shall be gauge 16 steel pipe Bollards of diameter minimum 150mm and 1.0 m above the ground, embedded to a depth of 0.5m at place. The bollards shall be filled using a minimum class (15/20) concrete and as shown on the Drawings.

2016 Retro-Reflective Road Studs

All retro-reflective road studs shall comply with BS 873: Part 4. The Contractor shall submit details of the reflective road studs he proposes to use in the works to the Engineer for approval. The Contractor shall submit also a Certificate of approval from an approving authority. The reflective road studs shall be installed in the locations shown on the drawings or instructed by the Engineer.

2017 Measurement and Payment

a) Item: Remove existing guardrail

Unit: m

Removal of guardrail shall be measured by the metre as the length of guardrail instructed to be removed, measured between terminal points of the sections removed. The rate shall include for loading, transporting to any point on the site, off-loading and stacking the material and disposing off material unsuitable for re-use.

b) Item: Renovate and re-erect guardrails

Unit: m

The unit of measurement shall be the length of single guardrail, whether straight or bent, or end pieces renovated as specified. The rate shall include for all works as specified and storage as required. The rate shall also include for erecting the guardrails in accordance with Clause 2006 and any new poles, nuts, bolts and accessories that may be required.

c) Item: Pedestrian railing

Unit: m

Pedestrian railing shall be paid by the length instructed by the Engineer. The rate shall include for supplying and erection in accordance with the drawings. It shall also include for any bending of end pieces as may be required, disposal of excess materials and tidying up the site after completion of installation.

d) Item: Service ducts

Unit: m

Service ducts stall be measured by the metre as the length of duct installed as per the Engineer's instructions. The rate shall include for providing all materials, excavation, and installation of concrete pipes with concrete surround, backfilling to formation level, compaction, draw-cords and plugs, all in accordance with Clause 2012 above.

e) Item: Duct markers

Unit: №

Duct markers posts shall be measured by the number installed. The rate shall include for provision

and installation of posts, all excavation and backfill, compaction to the satisfaction of the Engineer and removal of surplus materials.

f) Item: Bollards

Unit: №

Bollards shall be measured by the number installed. The rate shall include for provision and installation of bollards, all excavation and backfill, compaction to the satisfaction of the Engineer and removal of surplus material.

g) Item: Reflective road studs

Unit: №

Retro-reflective road studs shall be measured by the number installed. The rate shall include for provision and installation of studs to the manufacturer's recommendations and satisfaction of the Engineer.

h) Item: Road Bumps

Unit: m^3 of each type

2100 MISCALLANEOUS BRIDGE WORKS

All miscellaneous bridge works will meet the conditions as prescribed in section 21 of the Standard specification.

The material requirements will be as the per designer's manual and manufacturer's and Engineers instructions.

2200 DAY WORKS

2201 Scope

This specification covers instructions that may be issued by the Engineer as additional or substituted work to be executed on a day work basis by the Contractor or by his sub-contractors.

2202 Standards

All codes and standards mean the latest. Where not specified otherwise the installation shall generally follow the Kenyan Standard Specification for Road and Bridge Construction.

2203 Measurement and Payments

Measurement and payment for all day works items shall be in accordance with the items listed in the Bill of Quantities, the preamble to Bill of quantities and the specifications above and cover the payment of plant, labour and materials for work executed in accordance with the Engineer's instructions.

2300 PAVING BLOCKS

Pre-cast Concrete Paving Blocks

Precast concrete blocks shall be hydraulically pressed, complying with BS 7263: Part 1. Blocks shall be laid in accordance with BS 7263: Part 2 to the required cross fall.

2301 Measurement and Payment

The quantity to be paid will be measured by volume in m^2

2500 ENVIRONMENTAL MITIGATION MEASURES & HIV AIDS CAMPAIGN

2501 The Contractor shall implement the Environmental Management Plan (EMP) measures (Matrix Tables given below both for construction and maintenance and use phases), enhancement measures as directed by the Engineer. He shall submit the report on compliance with the Environmental Mitigation measures periodically to the Engineer. The Engineer will review the compliance submitted by the Contractor.

Environment and Social Management Plan Matrix

(a) Construction Phase

Table 1: Actions Matrix

Item №	Anticipated Impacts and Sources	Proposed Actions	Responsibility and Timeframe	Targets to Achieve	Monitoring Parameters
1	<u>Degradation of water sources:</u> • Over-abstraction of water, • Water quality degradation, • Effects on downstream dependants, • Stream bed siltation, <u>Sources:</u> • Silt from earth moving, • Oil and grease, • Raw asphalt concrete, • Workshops and machinery maintenance areas, • Construction camp sites, • Material preparation sites.	• Observe regulations on water abstraction permits, slope excavations, etc.), • Monitor standards of sanitation at the construction camps, • Establish a mechanism for solid waste collection, storage, transfer and disposal, • Liaise with water authorities for installation of RGSs at all crossings.	The Contractor, The Resident Engineer. DEO and KURA Engineers. Immediate action and maintained throughout the project period.	• Minimal silt discharging into water bodies, • NO effects on physical status of water quality, • Centralized effective collection of solid wastes	• Status of streams and wetlands and water quality along reserve, • General social Concerns. **Specific attention at all crossings and other water bodies.**
2.	<u>Air quality:</u> • Dust and particulate matter, • Visual disruption, • Particulate matter, • Surface depositions,	• Ensure earth surface roads, deviations and dry materials are kept damp at alls times,	The Contractor and the Resident Engineer. Surveillance by the, NEMA Officials, DEO	Low visible particulate matter in the air. Requirements of Clause 19 of the General Conditions of Contract	• Dust level within the project, • Exhaust fumes from construction machineries. **Project wide situation.**

Item №	Anticipated Impacts and Sources	Proposed Actions	Responsibility and Timeframe	Targets to Achieve	Monitoring Parameters
	• Bronchial and eye problems. <u>Sources:</u> Construction activities (earth moving and machinery operations).	• Establish information flow process to the communities on dusty conditions, • Keep inevitable dusty conditions and/or emissions as short as possible,	and Public Health Officials. Project period		

Item №	Anticipated Impacts and Sources	Proposed Actions	Responsibility and Timeframe	Targets to Achieve	Monitoring Parameters
3	**Vegetation Cover Degradation:** • Removal of vegetation from road reserve and deviation routes, • Loss of vegetation from material sites and access routes, **Sources:** • Construction of deviations, • Material borrow pits and quarries,	• Collaborate with the Local authorities in their beatification programmes, • Implement top-soiling and grassing programme for the road reserve and material sites, • Introduce soft shrubs in the median of the dual carriage, • Introduce trees on canopies on reserves near built-up areas, • Ensure vegetation does not compromise road safety.	The Contractor and Resident Engineer KURA Engineers and DEO to keep surveillance	Vegetation trend that is also safe to the road users. Requirements of Clause 19 of the standard Bid Docs	Greenery along the route of the road. **Special attention at sloppy sections and river crossings will be necessary.**
4	**Environmental Pollution:** • Siltation of water bodies, • Pollution of water (turbidity and hydrocarbons residuals), • Visual pollution (from dust and emissions), **Sources:** • Oil/grease storage,	• Develop Standard Operating Procedures (SOPs), schedules and supervision guidelines for the project works, • Focus on sensitive features (e.g. stream crossings and slopes) for necessary precautions,	The Contractor Resident Engineer NEMA offices, water offices and KURA Engineers to keep surveillance.	Minimal disruption to physical and biological environmental quality throughout the route.	• Water quality, • Environmental features, • Risks to health and safety, • Wastes characteristics. **Pollutants from camp sites, service yards**

	• Solid waste disposal (filters, greases, asphalt wastes, etc.), • Construction machinery and vehicles, • Excavated earth, • Water abstraction points,	• Establish dust control programme and machinery performance and waste disposal controls,			**and material preparation yards.**
Item №	**Anticipated Impacts and Sources**	Proposed Actions	Responsibility and Timeframe	Targets to Achieve	Monitoring Parameters
5	**Land degradation:** • Soil loss, • Soil quality degradation, • Land use changes, • Material sites, **Source:** • Surface runoff channels from camps and working areas, • Temporary road diversion routes, • Material extraction and transportation.	• Monitor land use trends along the route in liaison with planning department, • Initiate a planned vegetation programme on road reserve, • Rehabilitation plans of materials sites with landowners (lease agreements to reflect this aspect).	The Contractor and the Resident Engineer Surveillance by the KURA Engineers and DEO	Conservation of soils on each side of the road.	Land use trends. **A project wide concern, specific locations of camp sites, sloppy zones and crossings.** **The Contractor to carry out full ESIA for all material sites**
6	**Health and Safety** • Personal injuries (construction employees), • Communicable diseases including HIV/AIDS), • Potential accidents at material quarries,	• Provide safety programmes for material sites and working areas, • Provide safety provisions (signage and lighting) for deviations,	The Contractor and Resident Engineer. The PPRO, Surveillance by the Respective DWO, DPHO, and the DEO	Information flow and dissemination on health and safety. Specific response to HIV/AIDS issues Requirements of Clause 19 of the standard Bid Docs	Complaints on health safety aspects related to the road construction activities. Trends in HIV/AIDS cases along the corridor,

	• Environmental diseases (bronchial and eye problems), <u>Sources:</u> • Construction dust and emissions, • Interaction of construction workers with communities, • Pollution of water from construction activities, • Material sites, • Traffic deviations, • Construction camp sites.	• Awareness, prevention and training on HIV/AIDS and other social diseases, • Provide service roads and bus at settlement areas to reduce road accidents. • Provide medical, insurance cover and PPEs for all the construction workers.	Entire project period.	Requirements of Clause 34 and 35 of the General Condition Of Contract	Special focus on material sites and road diversions routes. **Focus on major towns and settlement areas I the project corridor.**

Item №	<u>Anticipated Impacts and Sources</u>	Proposed Actions	Responsibility and Timeframe	Targets to Achieve	Monitoring Parameters
7	<u>Social and Economic:</u> • Temporary disruption of business activities, • Insensitivity to public concerns during construction, • Access into and out of highway by special social groups, • Benefits to riparian communities • Safety issues (deviations and materials sites, etc.), • Noise to residents living along the route,	• Enhance consultations with communities on activities affecting them and collaborate on the impacts reduction, • Establish modalities of recruiting manual labour from within the project areas, • Provide service roads and slips accesses,	The Resident Engineer in conjunction with the Contractor, Liaison with local authorities and the Provincial Administration, Entire construction period	An acceptable, sustainable and economically viable road with long term benefits to the people without adverse implications on the physical and social environment.	Trends in socio-economic dynamics along the project road and its catchments , **Special attention on realigned and expanded sections of the road. Encroached**

	<u>Sources:</u> Materials sites, Deviation routes, Construction machineries, Crossings, Construction camps.	• Relevant Locals Authorities to consider physical planning along the highway / road (s) for maximum benefits, • Integrate construction works with other projects ongoing in the project route, • The contractor to establish and manage environmental and social committee to oversee mitigation measures,			**sections will also require attention.**

Item №	Anticipated Impacts and Sources	Proposed Actions	Responsibility and Timeframe	Targets to Achieve	Monitoring Parameters
8	Provision of Road Reserve	• Kenya Urban Roads Authority to undertake availability of the road reserve, • Serve adequate quit notices to the encroaching developments	KURA Upon commencement of the project	Clear project route and get back the road reserve.	**The design of the road is confined within the 60m.** **Completed survey will provide actual encroachments and necessary acquisitions.**
9	Material Sites (hard stone, gravel and water) • Land degradation, • Loss of land vegetation cover, • Surface hydrology changes, • Access roads' damages, • Water sources' degradation, • Water quality.	Full ESIA studies should be undertaken on all materials sites upon final identification, Rehabilitate the material sites after construction. Lease responsibilities with landowners necessary, Obtain appropriate permits for construction water abstractions	Contractor and Resident Engineer. DEO and KURA Engineers to supervise Throughout the construction phase.	Sustainable abstraction of materials.	It is likely that all material sites will be on private land. Sources of construction water have other uses by the communities.
10	Decommissioning • Removal of construction camps, • Materials sites and preparation yards, • Equipment removals.	• Carry out decommissioning audits for the camp sites, • Rehabilitate all material sites and preparation yards, • Remove all construction equipments and excess materials from the site.	The Contractor under supervision of the Resident Engineer, PPRO and the DEOs	Rehabilitated material sites and cleared material preparation yards.	Usability of the affected camps' and material sites.

(b) Road Maintenance and Use

Table 2: Action Plan Matrix (Maintenance and Use)

Item №	Anticipated Impacts and Sources	Proposed Actions	Responsibility and Timeframe	Targets to Achieve	Monitorable Indicators
1	**Environmental Pollution:** • Water quality degradation, • Air pollution, • Solid waste dumping (road litter), • Material spills (pollutants), • Vehicular scraps, • Residuals from material sites and preparation yards, **Sources:** • Surface runoff drains from the road, • Oils spills on road surface, • Road litter (from road users and roadside clearing), • Poorly maintained vehicles – higher related emissions, • Spills from accident sits, • Emerging social and economic centres, • Road repairs and maintenance activities.	• Establish a policy and implementation guidelines in close collaboration with experts and NEMA, • Develop monitoring compliance with vehicular emission standards along the road, • Introduce clean-up responsibilities for the road users (e.g. spills from accident vehicle owners), • Provide public waste receptacles at strategic locations along the route (bus stops and crossing areas), • Drainage channels be kept clear at all times to prevent overloading with polluting materials, • Collaboration with the traffic police on enforcement of road regulations.	KURA Consultation with the DEO and Water Offices for surveillance, Administration, Traffic Police Department and the Local Authorities.	A road that is compatible with the social conditions and features.	Complaints on the utilization of the roads, Environmental quality trends (status of water sources, water quality and aquatic vegetation), Compliance with road transport regulations.

Item №	Anticipated Impacts and Sources	Proposed Actions	Responsibility and Timeframe	Targets to Achieve	Monitorable Indicators
2	**Health, Safety and Security** • Contamination of water and water sources, • Noise and vibrations, • Increased road accidents, • Security aspects, • Spread of infectious diseases (HIV/AIDS and other social diseases) **Sources:** • Contaminated runoff from the road surface, • Roadside litter and solid wastes, • Increased traffic and driving style variances along the route, • Social interactions, • Inadequate road safety signage and facilities.	• Draw strategies for road safety measures and sensitize residents within risk areas, • Integrate safety measures in the overall maintenance of the road, • Develop liaison with health provision arms for emergence response on the road, • Liaise with appropriate department to ensure compliance with road regulations and traffic rules along the stretch, • Ensure maintenance of signage and other facilities at all times.	KURA Traffic Police department. Administration Leadership, Health department and rescue groups. Continuous	Enhanced safety throughout the road and construction of the road to enforce security.	Complaints from the riparian residents, Recorded cases and categories of road accidents, HIV/AIDS trends within towns along the route.

3	<u>Social and Economic Aspects</u> • Land use changes due to efficient transport, • Increased settlements and population, • Higher traffic volumes, • Mixed economic activities (general trading, industrial, institutional, etc.), • Road safety issues, • Road ownership by all.	• Collaboration with physical planning Depts. to enhance roadside planning. • Collaborations for sustainable social and economic development, • Include environmental aspects in scheduled road audits.	KURA Continuous process	Compatibility of the road with social and economic interests of the local residents and road users.	Land use trends in time and along the route, Population trends Complaints received from the local communities and the road users in general.

Item №	Anticipated Impacts and Sources	Proposed Actions	Responsibility and Timeframe	Targets to Achieve	Monitorable Indicators
4	Maintenance • Drainage clearance for free storm water flow, • Vegetation clearing for enhance visibility, • Roadside litter collection, • Road safety facilities and signage maintenance, • Re-encroachment into the road reserve, • Roadside land development practices,	• Establish modalities for the involvement of the riparian landowners in the maintenance of the road, • Install and maintain appropriate road signs. Liaise with other authorities in the control of roadside advertisement billboards that masks the safety signs, • Maintain trash bins at strategic locations along the route (bus stops and major crossing points), • Prepare a maintenance procedure in line with existing guidelines.	KURA DEO, water authorities the Administration for surveillance Continuous process	Maintained high level quality of road surface, installations and components.	
5	Decommissioning phase:	Undertake a decommissioning audit of part, sections or entire road reconstruction and establish appropriate measures to prevention environmental pollution and public safety.	KURA After the design road life span (15 – 25 years) Any major repairs along the route.	XXXXX or minimum impacts to the environment and social well being	_

2502 Scope

This specification sets out the Contractor's obligations with regard to on-site HIV/AIDS awareness campaign and preventive measures which are to be instituted.

2503 Interpretation and Documentation

The following documents shall inter-alia be red in conjunction with this specification.

- The instruction to bidders
- The Conditions of Contract
- The drawings

2504 HIV/AIDS Awareness Campaign

The Contractor shall institute an HIV/AIDS awareness campaign amongst his workers for the duration of the Contract. As part of the Campaign the Contractor will be required to display AIDS awareness posters in all buildings frequented by workers employed on the Contract where such buildings fall under the control of the Contractor. In addition, at least ten (10) of the Contractor's vehicles, regularly used on site shall display HIV/AIDS awareness posters. The posters shall be printed on gloss paper and shall be at least A1 size on building and A3 size or other approved size on vehicles. The message on the posters shall be supplied by the Employer through the Engineer before the posters are printed.

AIDS awareness shall also be included in the orientation process of all workers employed on the Contract.

In the awareness campaign, the Contractor shall employ and designate a safety officer who will undertake and coordinate all aspects of the HIV/AIDS awareness campaign.

2505 AIDS Prevention Campaign

The Contractor shall institute an HIV/AIDS prevention campaign amongst his workers for the duration of the Contract. As part of the campaign the Contractor will be required to make condoms available to workers. The condoms shall be from an approved manufacturer and comply with the current ISO Standards or WHO/UNAIDS Specifications and Guidelines for condoms, 1998, or any more recent equivalent publication. The Contractor shall make available at least 4,000 condoms every month, through dispensing machines or other approved method of distribution. The Contractor shall at all times keep the site adequately supplied with condoms.

As part of the campaign the Contractor shall operate at least one STD and HIV/AIDS clinic on site or make alternative arrangements with an existing suitably qualified and equipped Local clinic. The clinic shall have a minimum of two rooms each at least 10 m^2 with ablution and washroom. The clinic shall be suitably staffed and equipped for screening, diagnosis and counselling of STD and HIV/AIDS of the project staff and labour. The Contractor shall cover the costs of the clinic to provide free treatment for general STD cases, whereas workers with HIV/AIDS shall be referred to the national HIV/AIDS programme coordinated by the Ministry of Health.

2506 HIV/AIDS Training

2506.1 Objective

The objective of the AIDS/HIV training programme is to reduce the risk of exposure to and spread of the HIV virus in the Area influenced by the construction project. The target group will be local labourers and their superintendents employed by the works Contractor. The wider community will benefit indirectly through their normal day-to-day interaction with the target group.

2506.2 Scope of activities

Activities for HIV/AIDS awareness and prevention will be broad-based, targeting both individuals and groups. They may consist of:

- Information posters in public places, both on and offsite (eating houses, bars and guest houses) and on the Contractor's vehicles
- Availability of socially marketed condoms

- Peer educators (reference people) drawn from the local labour and educated in HIV/AIDS issues for discussion with colleagues (estimate 1 per 100 employees).
- Small focus group discussions to disseminate information covering key issues
- Theatre groups and video presentations
- Promotional events (such as football matches) to encourage openness and discussion of HIV/AIDS issues.
- Promotional bill boards to raise awareness of the integration of construction and HIV/AIDS activities
- Inclusion of HIV/AIDS activities at site meetings with the Local Aids Committees and other approved representatives.
- Availability of promotional materials including T-shirts, caps, bumper stickers and key rings.

The scope of activities may be tailored as required to meet the perceived needs and priorities of the labourers and should involve participatory approaches to ensure that they are appropriate and have a public health impact. The scale and frequency of activities may also be adjusted to suit the requirements of the target group. The education will cover:

- Preventive behaviour including partner reduction, condom use, awareness and appreciation of the importance of treatment of sexually transmitted incidences (STIs)
- Skills including negotiating safer sex, correct condom use, purchase of condoms without embarrassment, and
- Referral to local health centres and available services.

Tasks to be undertaken to support the above activities services shall include:

- Establishing the status and focus of all current and planned HIV/AIDS activities in the area to ensure complementarities and determining potential involvement in project activities
- Carrying out s brief review of regional activities combining road construction with HIV/AIDS campaigns to determine options, best practice key issues and constrains
- Reviewing of Information, Education and Communication (IEC) materials available and their relevance to road construction, making recommendations for future development of IEC materials
- Providing education and training for the site personnel, superintendents and peer educators for the scope of activities as above.
- Providing supervision for peer educators to ensure sustained quality of education and provision of incentives for the scope of activities as above.
- Providing Mechanism for the social marketing of condoms and distribution of materials
- Monitoring activities regularly to assess effectiveness and impact. This should include an initial, interim and final assessment of basis knowledge, attitude and practices (KAP) taking account of the existing data sources and recognizing the limitations due to the short time frame to show behaviour change. The KAP shall be supported by qualitative information from focus group discussion.

2506.3 Collaboration

HIV/AIDS activities are coordinated nationally by the National Aids Control Council (NACC). The Kenya Urban Roads Authority in consultation with NACC and the Ministry of Health (MOH) shall coordinate with the local representatives. Representatives of Local Health Authorities shall be invited to attend training and communication activities.

Activities on the construction site shall be linked as far as possible with the on-going HIV/AIDS awareness and prevention in the area. This will ensure complementary of approaches, reinforcing

education and minimizing duplication, in addition, these links will ensure that the target group will have access to continued information after the end of the construction period.

2506.4 Contractor's Responsibilities

The Contractor will employ and designate a qualified HIV/AIDS expert, to be approved by the Engineer, who will work closely with the Employer, Ministry of Health and other implementing agencies to support the HIV/AIDS awareness and prevention activities. This will ensure maximum effectiveness and integration with construction activities. Specific but not exclusive, issues to be addressed by the Contractor shall include:

- Scheduling appropriate timing and durations of the implementation of HIV/AIDS activities as part of work plan for labourers and superintendents.
- Designated rest times such as lunch breaks and paydays shall be excluded.
- Identification of suitable individuals from recruitment records for education with the implementing organization
- Provision of suitable sites for communication activities and for condom distribution
- Monitoring of the implementation of peer educator activities, and
- Provision of support as necessary to the implementing organization.

2506.5 Inputs

An organization experienced in the provision of HIV/AIDS awareness and prevention activities shall be selected as a subcontractor to provide the above scope of activities on behalf of the main Contractor.

2506.6 Reporting

The implementing organization shall produce the following reports to be submitted to the Contractor, Consultants, Kenya Urban Roads Authority and NACC:

- Monthly progress briefs for inclusion in site meetings discussions
- Quarterly reports detailing activities carried out, issues and follow ups
- A review report of activities in the road construction sector
- A review report of the existing IEC materials with recommendations for development of materials specifically for the road sector
- A final report detailing the methodology and activities carried out under this project including lessons learnt, impact, liaison with the Contractor and other parties.

In addition, a report with the recommended approach for integration of HIV/AIDS awareness and prevention activities in the road construction sector shall be produced. This shall be a synthesis of project activities including contractual approaches, communication activities, availability of materials and liaison with the existing organizations. It shall be developed with all parties involved in the construction activities to ensure that the wide range of views and experiences are gained.

The final report and recommended approach will be presented to the Kenya Urban Roads Authority, NACC and other interested organizations including private sector, funding agencies and Non-Governmental Organisations.

2507 Timing

Activities shall commence at the start of the construction period and continue throughout the Contract period to ensure that a sustained impact reporting and dissemination activities shall continue for three months after the project is completed to ensure integration into the current practice.

2508 Measurement and Payment

The payment items in this Clause shall include full compensation for all work associated with the provision of HIV/AIDS related services as specified.

Item: Instituting an HIV/AIDS awareness campaign

Unit: Months

The unit of measurement shall be the calendar month or part thereof, measured over the duration of the campaign. The rate shall include for providing a Safety Officer to deal with HIV/AIDS together with his/her transport requirements. The payment shall be made monthly, pro-rata for parts of a month, from the date of appointment of the officer until the completion of the works or substantial demobilization of the local workforce whichever comes first.

Item: Instituting an HIV/AIDS prevention campaign

Unit: Months

The unit of measurements shall be the month. The rate shall include the cost of providing a clinic or make alternative suitable arrangements, running the clinic, providing condoms as per the specifications and meeting all the costs of time related costs.

The payment shall be made monthly, pro-rata for parts of a month, from the date of establishing the clinic until the completion of the works or substantial demobilization of the local workforce whichever comes first.

Payment shall only be made for periods during which the Contractor has effectively provided the services.

Item: HIV/AIDS training

Unit: Provisional Sum

Payment shall be made for the actual expenditure incurred by the Contractor for which receipted vouchers shall be produced. The rate shall include full compensation for equipment, labour and material required for the provision of the services.

In addition, the Contractor will be paid for handling, overheads and profit at a percentage (%) rate of the receipted expenses incurred.

FIGURE C.1 - CULVERT ENTRY / EXIT STRUCTURE TYPES

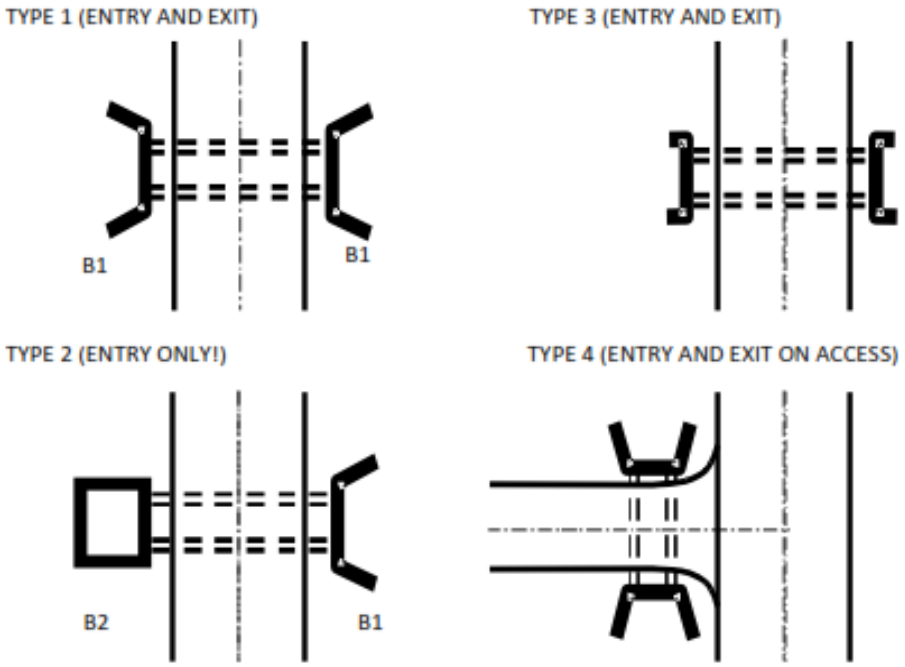

NOTE:

Coding system has been used in describing the standardised designs of the various culvert entry and exit structures. The code names consist of a number to specify shape and function as elaborated in above while the used construction materials are identified through an alphabetic symbol as follows:

A = Concrete block
B = Stone masonry
C = Dressed stones

An example code of "B2" would therefore stand for a drop inlet type structure to be built in stone masonry.

FIGURE C.2 - HEADWALL TYPE 1 (HEAD AND WINGWALLS)

PIPE DIAMETER (IN MM)			MATERIAL REQUIREMENTS									
			TYPE A (CONCRETE BLOCKS			TYPE B (STONE MASONRY)						
	DIMENSION	UNIT	450	600	900	450	600	900				
a	FOUNDATION	m	0.30	0.30	0.30	0.40	0.40	0.40				
B	FOUNDATION	M	0.50	0.50	0.40	0.30	0.30	0.40				
c	FOUNDATION		2.20	2.35	2.89	2.20	2.35	2.89				
d	APRON	m	1.00	1.00	1.20	1.00	1.00	1.20				
e	APRON	m	0.20	0.33	0.20	0.33	0.33	0.20				
f	WALL	m	0.20	0.33	0.20	0.43	0.43	0.40				
g	WALL	m	0.30	0.30	0.30	0.30	0.30	0.30				
h	WALL	m	1.15	1.15	1.39	1.15	1.15	1.39				
i	WALL	m	0.20	0.20	0.20	0.40	0.40	0.40				
k	APRON	m	1.05	1.20	1.50	1.05	1.20	1.50				
MATERIAL REQUIREMENT												
FOUNDATION (Concrete)		m³	0.3	0.32	0.51	0.4	0.42	1.05				
HEAD /WINGWALLS (Concrete/Masonry)		m³	0.4	0.47	0.67	0.8	0.93	1.35				
APRON (Concrete)		m³	0.33	0.36	0.53	0.33	0.36	0.53				

CULVERT PIPES	
X-SECTION WIDTH	No. of Pipes
4.50	6.00
5.50	7.00
6.50	8.00

FIGURE C.3 - HEADWALL TYPE 2 (DROP INLET)

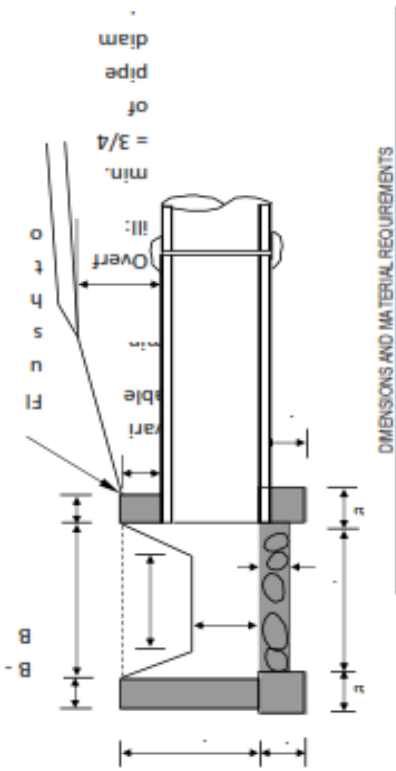

DIMENSIONS AND MATERIAL REQUIREMENTS

PIPE DIAMETER IN (M)			TYPE A (CONCRETE BLOCKS)			TYPE B (STONE MASONRY)		
DIMENSION		UNIT	450	600	900	450	600	900
a	FOUNDATION	m	0.30	0.50	0.30	0.40	0.40	0.40
B	FOUNDATION	M	0.30	0.50	0.30	0.30	0.30	0.30
c	FOUNDATION	m	1.10	1.10	1.40	1.20	1.20	1.50
d	APRON	m	0.90	0.90	0.90	1.00	1.00	1.00
e	APRON	m	0.20	0.20	0.20	0.20	0.20	0.20
f	DROP INLET	m	0.60	0.60	0.60	0.60	0.60	0.60
g	DROP INLET	m	0.30	0.40	0.60	0.30	0.40	0.60
h	DROP INLET	m	0.60	0.80	1.20	0.60	0.80	1.20
I	DROP INLET	m	0.20	0.20	0.20	0.40	0.40	0.40
k	DROP INLET	m	1.20	1.20	1.50	1.20	1.20	1.50
l	DROP INLET	m	1.00	1.00	1.00	1.00	1.00	1.00
m	DROP INLET	m	0.38	0.50	0.30	0.38	0.30	0.30
MATERIAL REQUIREMENT								
FOUNDATION (Concrete)		m^3	0.47	0.47	0.52	0.72	0.72	0.79
HEADWINGWALLS (ConcreteMasonry)		m^3	0.53	0.69	1.11	1.24	1.63	2.61
APRON (Concrete)		m^3	0.24	0.24	0.30	0.24	0.24	0.30

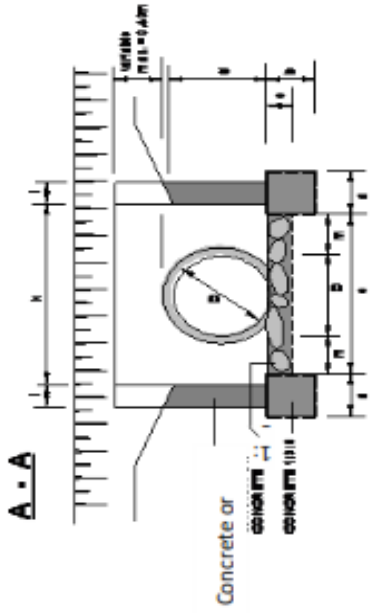

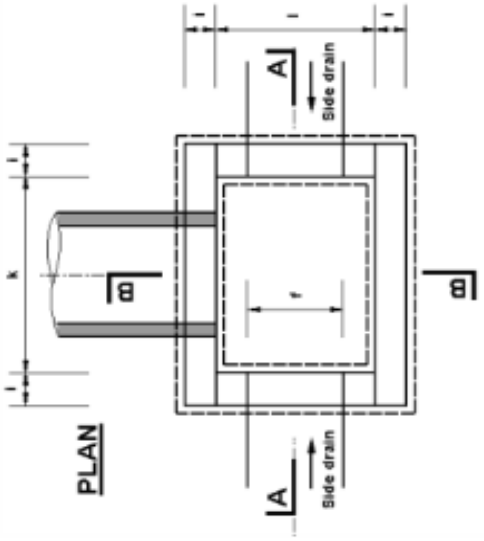

FIGURE C.4 - HEADWALL TYPE 3A (CONCRETE BLOCK HEADWALLS)

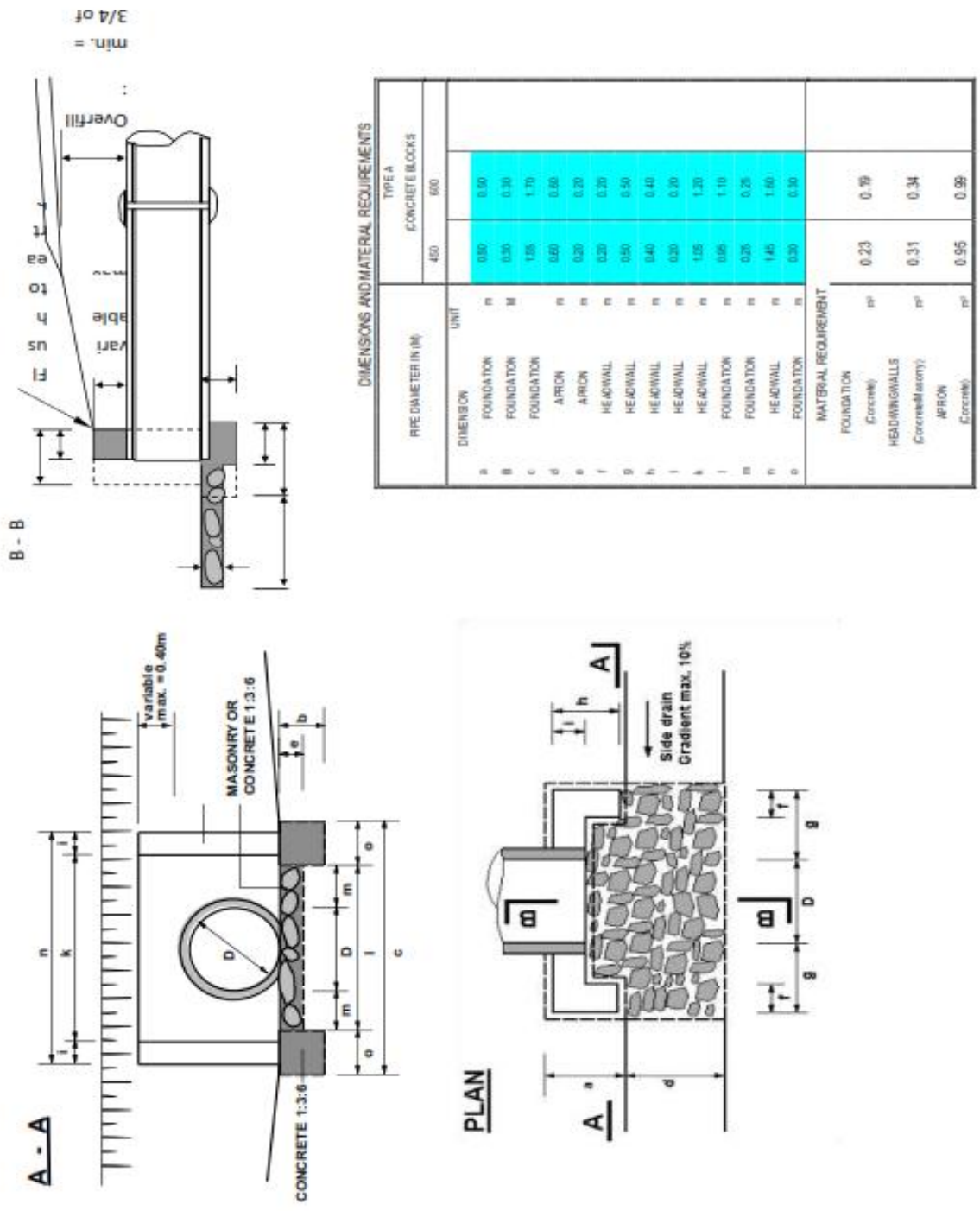

FIGURE C.5 - HEADWALL TYPE 3B (STONE MASONRY HEADWALLS)

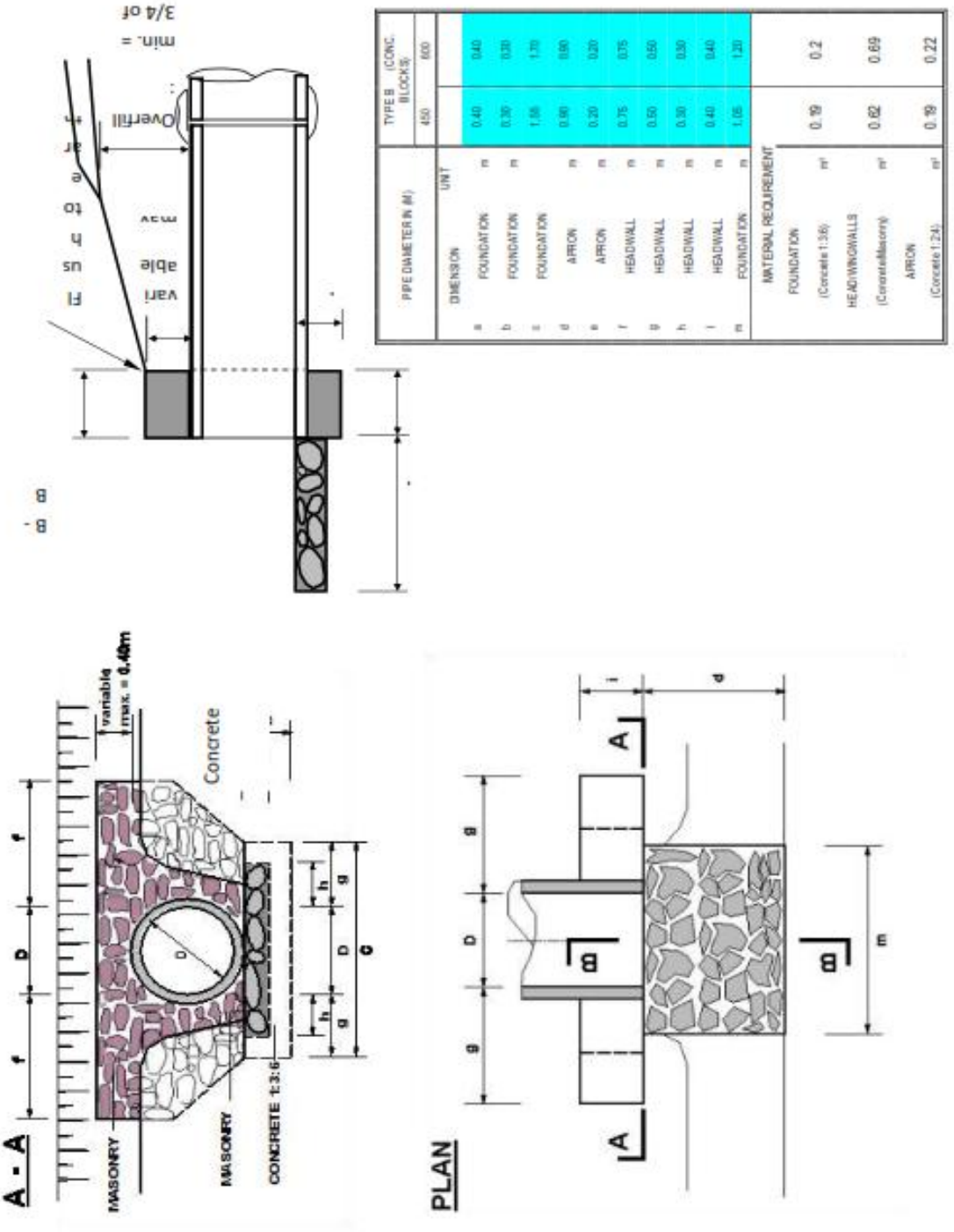

FIGURE C.6 - HEADWALL TYPE 4 (FOR ACCESS CULVERTS)

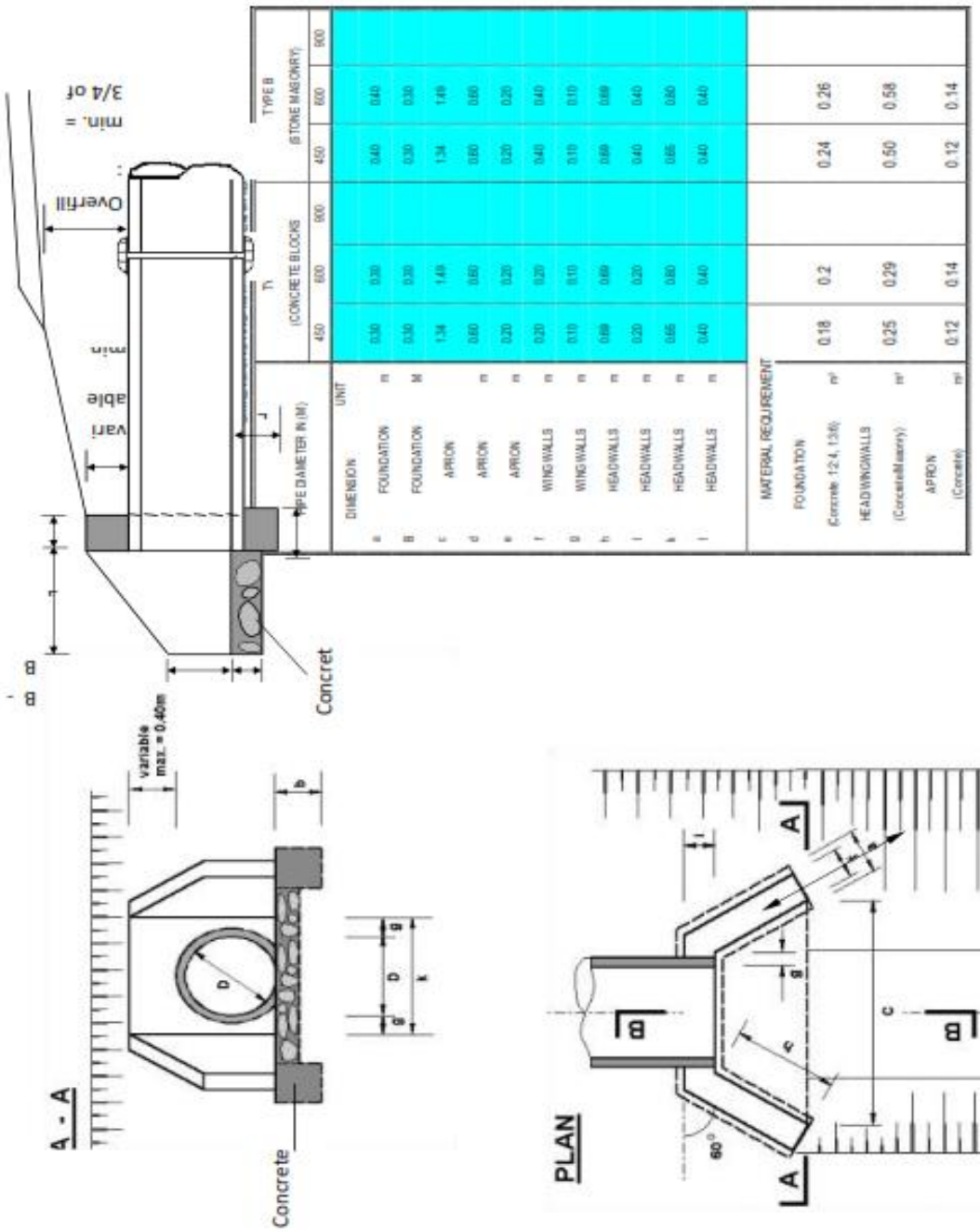

FIGURE C.7- BEDDING AND HAUNCH PROFILES TYPES I & II

PROFILE I

(CONCRETE)

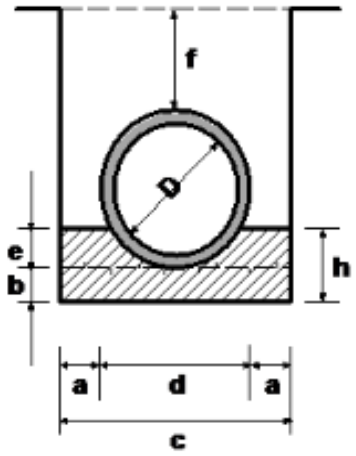

PROFILE II

(CONCRETE)

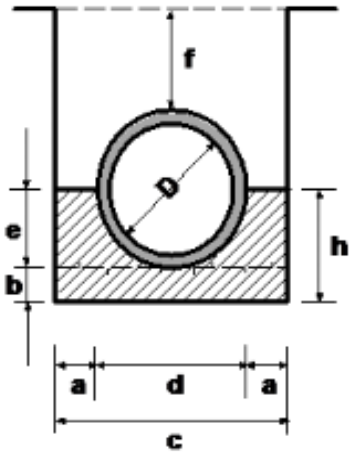

Diameter (D)	450 (mm)	600 (mm)	900 (mm)
	Dimensions in (m)		
a	0.15	0.2	0.2
b	0.1	0.15	0.15
c	0.86	1.12	1.48
d	0.56	0.72	1.08
e	0.14	0.18	0.27
f (min.)	0.34	0.45	0.68
g	-	-	-
h	0.24	0.33	0.42
i	-	-	-
Concrete	Volume in (m3/m)		
	0.16	0.3	0.48
Application	- Fair subgrade condition; - Overfill > ¾ Diameter; - Seasonal waterflow only.		
Remarks	- Use gravel material for back/ overfill.		

450 (mm)	600 (mm)	900 (mm)
Dimensions in (m)		
0.15	0.2	0.2
0.1	0.15	0.15
0.86	1.12	1.48
0.56	0.72	1.08
0.28	0.36	0.54
0.34	0.45	0.68
-	-	-
0.38	0.51	0.69
-	-	-
Volume in (m3/m)		
0.2	0.37	0.56
- Fair to poor subgrade Condition; - Overfill > ¾ Diameter; - Seasonal waterflow only.		
- Use gravel material for back/ overfill.		

FIGURE C.8 - BEDDING AND HAUNCH PROFILES TYPES III & IV

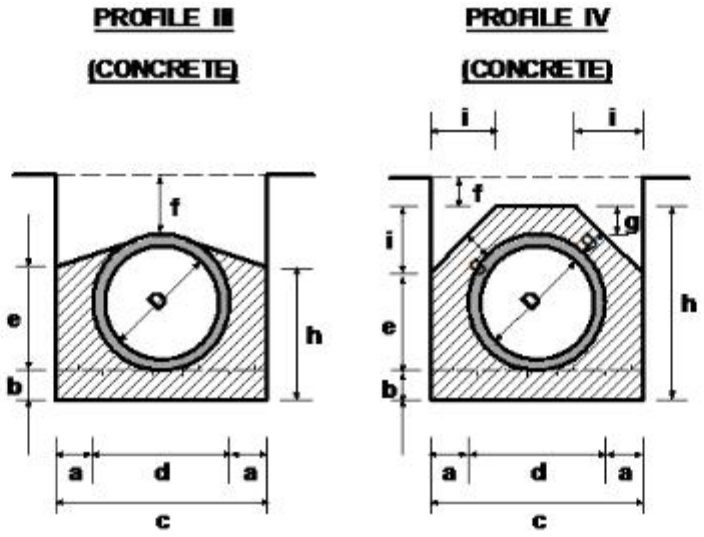

Diameter (D)	450 (mm)	600 (mm)	900 (mm)
	Dimensions in (m)		
a	0.15	0.2	0.2
b	0.1	0.15	0.15
c	0.86	1.12	1.48
d	0.56	0.72	1.08
e	0.42	0.54	0.81
f (min.)	0.23	0.3	0.45
g	-	-	-
h	0.52	0.69	0.96
i	-	-	-
Concrete	Volume in (m3/m)		
	0.26	0.47	0.71
Application	- Fair subgrade condition; - Overfill > ¾ Diameter; - Seasonal waterflow only.		
Remarks	- Use gravel material for back/ overfill.		

450 (mm)	600 (mm)	900 (mm)
Dimensions in (m)		
0.15	0.2	0.2
0.1	0.15	0.15
0.86	1.12	1.48
0.56	0.72	1.08
0.46	0.52	0.78
0.15	0.15	0.15
0.15	0.15	0.15
0.81	1.02	1.38
0.28	0.35	0.45
Volume in (m3/m)		
0.37	0.61	0.92
- Fair to poor subgrade Condition; - Overfill > ¾ Diameter; - Seasonal waterflow only.		
- Use gravel material for back/ overfill.		

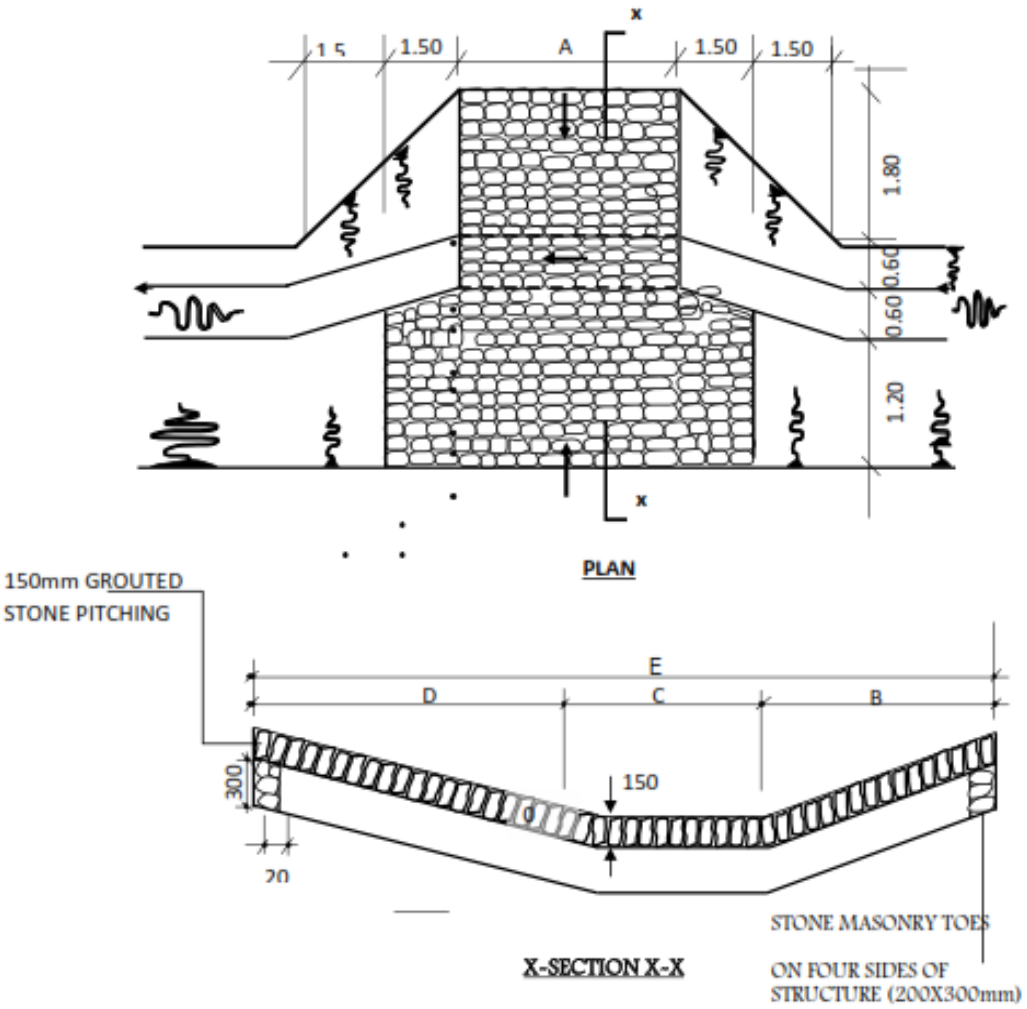

QUANTITIES TABLE								
Cross section	DIMENSIONS					RED Excavation (m3)	Stone masonry (m³)	150mm Grouted stone pitching (m3)
	A	B	C	D	E			
A	4000	1600	600	1600	4200	7.50	1.30	21.75
	6000	1600	600	1600	4200	10.00	1.60	30.15
B	4000	1400	400	1600	3600	7.00	1.20	18.30
	6000	1400	400	1600	3600	9.00	1.50	25.50

P.C.C. KERB AND CHANNEL
SCALE 1:10
350
100
100
100
50
100
125
125
100
125MM X 250MM
P.C.C. KERB
125MM X 100MM
P.C.C. CHANNEL
DIA. 300MM INVERT BLOCK DRAIN
SIDE SLABS VARIES
SCALE 1:10
75
225
225
75
150
75
450
300
75
225
225
75
P.C.C. CHANNEL AND HAUNCH
SCALE 1:10
100
50
125 mm x 100 mm
P.C. CHANNEL

FIGURE 2 - PUBLICITY SIGN

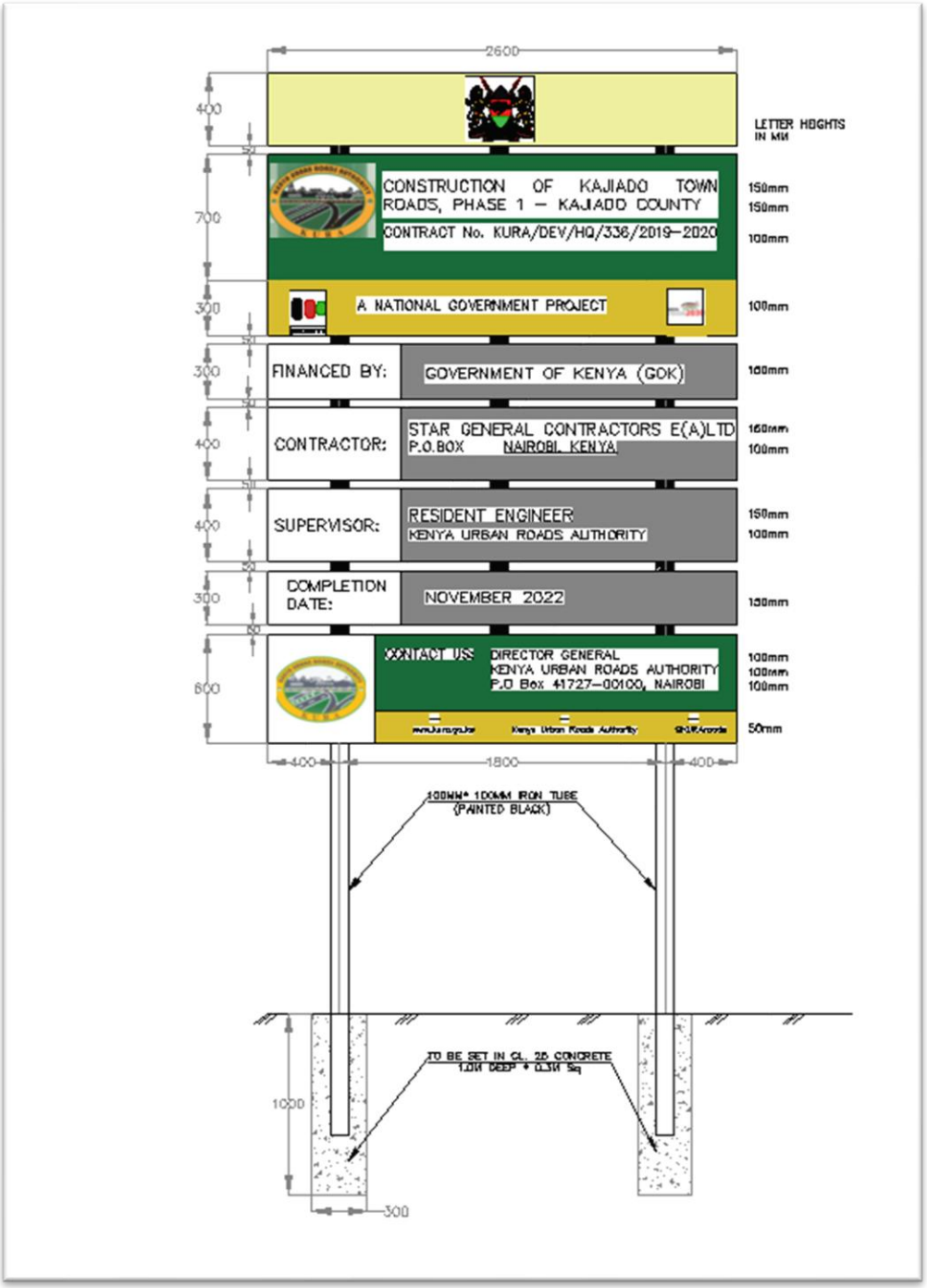

FIGURE 3 - GOOGLE MAP

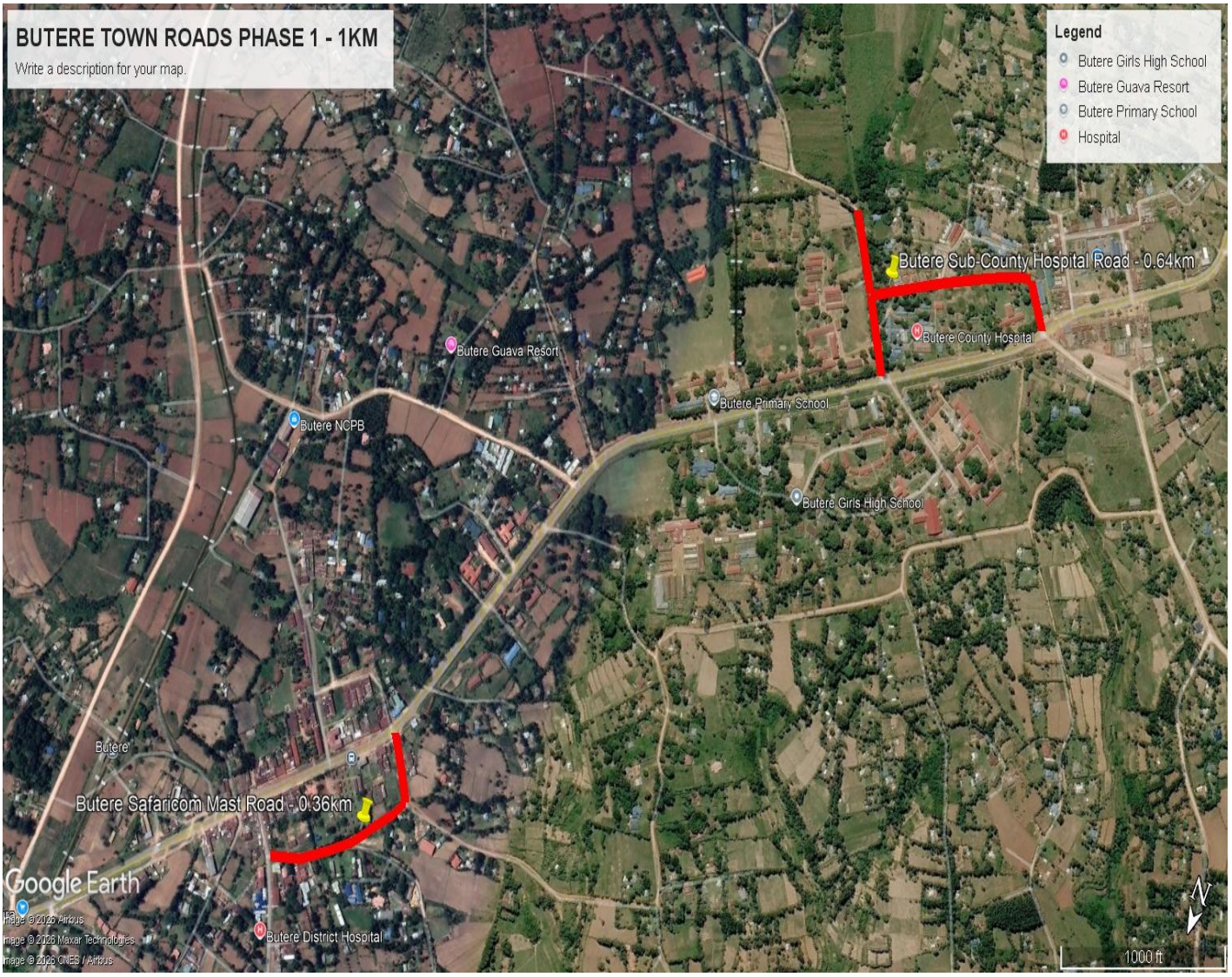

SUPPLEMENTARY INFORMATION

[Insert any supplementary information not provided for in the Contract Forms]

PART 3 – CONDITIONS OF CONTRACT AND CONTRACT FORMS

SECTION VII - GENERAL CONDITIONS OF CONTRACT

1. General Provisions

1.1 Definitions

In the Conditions of Contract ("these Conditions"), which include Particular Conditions, Parts A and B, and these General Conditions, the following words and expressions shall have the meanings stated. Words indicating persons or parties include corporations and other legal entities, except where the context requires otherwise.

1.1.1. The Contract

"Bills of Quantities", "Daywork Schedule" and "Schedule of Payment Currencies" mean the documents so named (if any) which are comprised in the Schedules.

"Contract Agreement" means the contract agreement referred to in Sub-Clause 1.6 [Contract Agreement].

"Contract" means the Contract Agreement, the Letter of Acceptance, the Letter of Tender, these Conditions, the Specification, the Drawings, the Schedules, and the further documents (if any) which are listed in the Contract Agreement or in the Letter of Acceptance.

"Drawings" means the drawings of the Works, as included in the Contract, and any additional and modified drawings issued by (or on behalf of) the Procuring Entity in accordance with the Contract.

"Laws" means all national legislation, statutes, ordinances, and regulations and by-laws of any legally constituted public authority.

"Letter of Acceptance" means the letter of formal acceptance, signed by the contractor and the Procuring Entity, including any annexed memoranda comprising agreements between and signed by both Parties.

"Letter of Tender" means the document entitled letter of tender or letter of tender, which was completed by the Contractor and includes the signed offer to the Procuring Entity for the Works.

"SCC" means the Special Conditions of Contract completed by the Procuring Entity which modify the General Conditions of Contract.

"Schedules" means the document(s) entitled schedules, completed by the Contractor and submitted with the Letter of Tender, as included in the Contract. Such document may include the Bills of Quantities, data, lists, and schedules of rates and/or prices.

"Specification" means the document entitled specification, as included in the Contract, and any additions and modifications to the specification in accordance with the Contract. Such document specifies the Works.

"Tender" means the Letter of Tender and all other documents which the Contractor submitted with the Letter of Tender, as included in the Contract.

1.1.2. Parties and Persons

"Contractor's Personnel" means the Contractor's Representative and all personnel whom the Contractor utilizes on Site, who may include the staff, labor and other employees of the Contractor and of each Subcontractor; and any other personnel assisting the Contractor in the execution of the Works.

"Contractor's Representative" means the person named by the Contract or in the Contractor appointed from time to time by the Contractor under Sub-Clause 4.3 [Contractor's Representative], who acts on behalf of the Contractor.

"Contractor" means the person(s) named as contractor in the Letter of Tender accepted by the Procuring Entity and the legal successors in title to this person(s).

"Engineer" means the person appointed by the Procuring Entity to act as the Engineer for the purposes of

the Contract and named in the **SCC**, or other person appointed from time to time by the Procuring Entity and notified to the Contractor under Sub-Clause 3.4 [Replacement of the Engineer].
"Party" means the Procuring Entity or the Contractor, as the context requires.

"Procuring Entity" means the Entity named in the Special Conditions of Contract.

"Procuring Entity's Personnel" means the Engineer, the assistants referred to in Sub-Clause 3.2 [Delegation by the Engineer] and all other staff, labor and other employees of the Engineer and of the Procuring Entity; and any other personnel notified to the Contractor, by the Procuring Entity or the Engineer, as Procuring Entity's Personnel.

"Procuring Entity" means the person named as Procuring Entity in the **SCC** and the legal successors in title to this person.

"Subcontractor" means any person named in the Contract as a subcontractor, or any person appointed as a subcontractor, for a part of the Works; and the legal successors in title to each of these persons.

1.1.3. Dates, Tests, Periods and Completion

"Base Date" means a date 30 day prior to the submission of tenders.

"Commencement Date" means the date notified under Sub-Clause 8.1 [Commencement of Works].

"Completion Certificate" means the certificate issued under Sub-Clause 11.9 [Performance

Certificate]. **"Day"** means a calendar day and "year" means 365 days.

"Defects Notification Period" means the period for notifying defects in the Works or a Section (as the case may be) under Sub-Clause 11.1 [Completion of Outstanding Work and Remedying Defects], which extends over 365 days except if otherwise stated in the **SCC** (with any extension under Sub-Clause 11.3 [Extension of Defects Notification Period]), calculated from the date on which the Works or Section is completed as certified under Sub-Clause 10.1[Taking Over of the Works and Sections].

"Taking-Over Certificate" means a certificate issued under Clause 10 [Procuring Entity's Taking Over].

"Tests after Completion" means the tests (if any) which are specified in the Contract and which are carried out in accordance with the Specification after the Works or a Section (as the case may be) are taken over by the Procuring Entity.

"Tests on Completion" means the tests which are specified in the Contract or agreed by both Parties or instructed as a Variation, and which are carried out under Clause 9 [Tests on Completion] before the Works or a Section (as the case may be) are taken over by the Procuring Entity.

"Time for Completion" means the time for completing the Works or a Section (as the case may be) under Sub- Clause 8.2 [Time for Completion], as stated in the **SCC** (with any extension under Sub-Clause 8.4 [Extension of Time for Completion]), calculated from the Commencement Date.

1.1.4. Money and Payments

"Accepted Contract Amount" means the amount accepted in the Letter of Acceptance for the execution and completion of the Works and the remedying of any defects.

"Contract Price" means the price defined in Sub-Clause 14.1 [The Contract Price] and includes adjustments in accordance with the Contract.

"Cost" means all expenditure reasonably incurred (or to be incurred) by the Contractor, whether on or off the Site, including overhead and similar charges, but does not include profit.

"Final Payment Certificate" means the payment certificate issued under Sub-Clause 14.13 [Issue of Final Payment Certificate].

"Final Statement" means the statement defined in Sub-Clause 14.11 [Application for Final Payment

Certificate].
"Foreign Currency" means acurrency in which part (orall) of the Contract Price is payable, but not the Local Currency.

"Interim Payment Certificate" means a payment certificate issued under Clause 14 [Contract Price and Payment], other than the Final Payment Certificate.

"Local Currency" means the currency of the Country.

"Payment Certificate" means a payment certificate issued under Clause 14 [Contract Price and Payment].

"Provisional Sum" means a sum (if any) which is specified in the Contract as a provisional sum, for the execution of any part of the Works or for the supply of Plant, Materials or services under Sub-Clause 13.5 [Provisional Sums].

"Retention Money" means the accumulated retention moneys which the Procuring Entity retains under Sub- Clause 14.3 [Application for Interim Payment Certificates] and pays under Sub-Clause 14.9 [Payment of Retention Money].

"Statement" means a statement submitted by the Contractor as part of an application, under Clause 14 [Contract Price and Payment], for a payment certificate.

1.1.5. Works and Goods

"Contractor's Equipment" means all apparatus, machinery, vehicles and other things required for the execution and completion of the Works and the remedying of any defects. However, Contractor's Equipment excludes Temporary Works, Procuring Entity's Equipment (if any), Plant, Materials and any other things intended to form or forming part of the Permanent Works.

"Goods" means Contractor's Equipment, Materials, Plant and Temporary Works, or any of them as appropriate.

"Materials" means things of all kinds (other than Plant) intended to form or forming part of the Permanent Works, including the supply-only materials (if any) to be supplied by the Contractor under the Contract.

"Permanent Works" means the permanent works to be executed by the Contractor under the Contract.

"Plant" means the apparatus, machinery and other equipment intended to form or forming part of the Permanent Works, including vehicles purchased for the Procuring Entity and relating to the construction or operation of the Works.

"Section" means a part of the Works specified in the **SCC** as a Section (if any).

"Temporary Works" means all temporary works of every kind (other than Contractor's Equipment) required on Site for the execution and completion of the Permanent Works and the remedying of any defects.

"Works" mean the Permanent Works and the Temporary Works, or either of them as appropriate.

1.1.6. Other Definitions

"Contractor's Documents" means the calculations, computer programs and other software, drawings, manuals, models and other documents of a technical nature (if any) supplied by the Contractor under the Contract.

"Country" means Kenya as the country in which the Site is located, where the Permanent Works are to be executed.

"Force Majeure" is defined in Clause 19 [Force Majeure].

"Laws" means all national (or state) legislation, statutes, ordinances and other laws, and regulations and by- laws of any legally constituted public authority.

"Notice of Dissatisfaction" means the notice given by either Party to the other under Sub-Clause 20.4 indicating its dissatisfaction and intention to commence arbitration.
"Performance Security" means the security (or securities, if any) under Sub-Clause 4.2 [Performance Security].

"Procuring Entity's Equipment" means the apparatus, machinery and vehicles (if any) made available by the Procuring Entity for the use of the Contractor in the execution of the Works, as stated in the Specification; but does not include Plant which has not been taken over by the Procuring Entity.

"Site" means the places where the Permanent Works are to be executed, including storage and working areas, and to which Plant and Materials are to be delivered, and any other places as may be specified in the Contract as forming part of the Site.

"Unforeseeable" means not reasonably foreseeable by an experienced contractor by the Base Date.

"Variation" means any change to the Works, which is instructed or approved as a variation under Clause 13 [Variations and Adjustments].

1.2 Interpretation

In the Contract, except where the context requires otherwise:

a) Words indicating one gender include all genders;

b) words indicating the singular also include the plural and words indicating the plural also include the singular;

c) provisions including the word "agree", "agreed" or "agreement" require the agreement to be recorded in writing;

d) "written" or "inwriting" means hand-written, type-written, printed or electronically made, and resulting in a permanent record; and

e) the word "tender" is synonymous with "tender" and "tenderer" with "Tenderer" and the words "tender documents" with "tendering documents."

1.3 Communications

1.3.1 Wherever these Conditions provide for the giving or issuing of approvals, certificates, consents, determinations, notices, requests and discharges, these communications shall be:

a) In writing and delivered by hand (against receipt), sent by mail or courier, or transmitted using any of the agreed systems of electronic transmission as stated in the **SCC**; and

b) Delivered, sent or transmitted to the address for the recipient's communications as stated in the **SCC**. However:

i) if the recipient gives notice of another address, communications shall thereafter be delivered accordingly; and

ii) if the recipient has not stated otherwise when requesting an approval or consent, it may be sent to the address from which the request was issued.

1.3.2 Approvals, certificates, consents and determinations shall not be unreasonably withheld or delayed. When a certificate is issued to a Party, the certifier shall send a copy to the other Party. When a notice is issued to a Party, by the other Party or the Engineer, a copy shall be sent to the Engineer or the other Party, as the case may be.

1.4 Law and Language

1.4.1 The Contract shall be governed by the **laws of Kenya**.

1.4.2 The ruling language of the Contract shall be the **English Language.**

1.5 Priority of Documents

1.5.1 The documents forming the Contract are to be taken as mutually explanatory of one another. For the purposes of interpretation, the priority of the documents shall be in accordance with the following sequence:

a) The Contract Agreement,

b) The Letter of Acceptance,

c) the Particular Conditions–Part A,
d) the Particular Conditions–Part B
e) the General Conditions of Contract
f) the Form of Tender,
g) the Specifications and Bills of Quantities
h) the Drawings, and
i) the Schedules and any other documents forming part of the Contract.

1.5.2 If an ambiguity or discrepancy is found in the documents, the Engineer shall issue any necessary clarification or instruction.

1.6 Contract Agreement

The Parties shall enter into a Contract Agreement within 14 days after the Contractor receives the Letter of Acceptance, unless the Particular Conditions establish otherwise. The Contract Agreement shall be based upon the form annexed to the Particular Conditions. The costs of stamp duties and similar charges (if any) imposed by law in connection with entry into the Contract Agreement shall be borne by the Procuring Entity.

1.7 Assignment

Neither Party shall assign the whole or any part of the Contract or any benefit or interest in or under the Contract. However, either Party:
a) May assign the whole or any part with the prior agreement of the other Party, at the sole discretion of such other Party, and
b) May, as security in favor of a Procuring Entity or financial institution, assign its right to any moneys due, or to become due, under the Contract.

1.8 Care and Supply of Documents

1.8.1 The Specification and Drawings shall be in the custody and care of the Procuring Entity. Unless otherwise stated in the Contract, two copies of the Contract and of each subsequent Drawing shall be supplied to the Contractor, who may make or request further copies at the cost of the Contractor.

1.8.2 Each of the Contractor's Documents shall be in the custody and care of the Contractor, unless and until taken over by the Procuring Entity. Unless otherwise stated in the Contract, the Contractor shall supply to the Engineer

1.8.3 The Contractor shall keep, on the Site, a copy of the Contract, publications named in the Specification, the Contractor's Documents (if any), the Drawings and Variations and other communications given under the Contract. The Procuring Entity's Personnel shall have the right of access to all these documents at all reasonable times.

1.8.4 If a Party becomes aware of an error or defect in a document which was prepared for use in executing the Works, the Party shall promptly give notice to the other Party of such error or defect.

1.9 Delayed Drawings or Instructions

1.9.1 The Contractor shall give notice to the Engineer whenever the Works are likely to be delayed or disrupted if any necessary drawing or instruction is not issued to the Contractor within a particular time, which shall be reasonable. The notice shall include details of the necessary drawing or instruction, details of why and by when it should be issued, and the nature and amount of the delay or disruption likely to be suffered if it is late.

If the Contractor suffers delay and/or incurs Cost as a result of a failure of the Engineer to issue the notified drawing or instruction within a time which is reasonable and is specified in the notice with supporting details, the Contractor shall give a further notice to the Engineer and shall be entitled subject to Sub-Clause 20.1 [Contractor's Claims] to:

a) an extension of time for any such delay, if completion is or will be delayed, under Sub-Clause 8.4 [Extension of Time for Completion], and
b) payment of any such Cost-plus profit, which shall be included in the Contract Price.

1.9.2 After receiving this further notice, the Engineer shall proceed in accordance with Sub-Clause 3.5 [Determinations] to agree or determine these matters.

1.9.3 However, if and to the extent that the Engineer's failure was caused by any error or delay by the Contractor, including an error in, or delay in the submission of, any of the Contractor's Documents, the Contractor shall not be entitled to such extension of time, Cost or profit.

1.10 Procuring Entity's Use of Contractor's Documents

1.10.1 As between the Parties, the Contractor shall retain the copyright and other intellectual property rights in the Contractor's Documents and other design documents made by (or on behalf of) the Contractor. The Contractor shall be deemed (by signing the Contract) to give to the Procuring Entity a non-terminable transferable non- exclusive royalty-free license to copy, use and communicate the Contractor's Documents, including making and using modifications of them. This license shall:

a) apply throughout the actual or intended working life (whichever is longer) of the relevant parts of the Works,

b) entitle any person in proper possession of the relevant part of the Works to copy, use and communicate the Contractor's Documents for the purposes of completing, operating, maintaining, altering, adjusting, repairing and demolishing the Works, and

c) in the case of Contractor's Documents which are in the form of computer programs and other software, permit their use on any computer on the Site and other places as envisaged by the Contract, including replacements of any computers supplied by the Contractor.

1.10.2 The Contractor's Documents and other design documents made by (or on behalf of) the Contractor shall not, without the Contractor's consent, be used, copied or communicated to a third party by (or on behalf of) the Procuring Entity for purposes other than those permitted under this Sub-Clause.

1.11 Contractor's Use of Procuring Entity's Documents

As between the Parties, the Procuring Entity shall retain the copyright and other intellectual property rights in the Specification, the Drawings and other documents made by (or on behalf of) the Procuring Entity. The Contractor may, at his cost, copy, use, and obtain communication of these documents for the purposes of the Contract. They shall not, without the Procuring Entity's consent, be copied, used or communicated to a third party by the Contractor, except as necessary for the purposes of the Contract.

1.12 Confidential Details

The Contractor's and the Procuring Entity's Personnel shall disclose all such confidential and other information as may be reasonably required in order to verify compliance with the Contract and allow its proper implementation.

1.13 Compliance with Laws

The Contractor shall, in performing the Contract, comply with applicable Laws. Unless otherwise stated in the Particular Conditions:

a) The Procuring Entity shall have obtained (or shall obtain) the planning, zoning, building permit or similar permission for the Permanent Works, and any other permissions described in the Specification as having been (or to be) obtained by the Procuring Entity; and the Procuring Entity shall indemnify and hold the Contractor harmless against and from the consequences of any failure to do so; and

b) the Contractor shall give all notices, pay all taxes, duties and fees, and obtain all permits, licenses and approvals, as required by the Laws in relation to the execution and completion of the Works and the remedying of any defects; and the Contractor shall indemnify and hold the Procuring Entity harmless against and from the consequences of any failure to do so, unless the Contractor is impeded to accomplish these actions and shows evidence of its diligence.

1.14 Joint and Several Liability

If the Contractor constitutes (under applicable Laws) a joint venture, consortium or other unincorporated grouping of two or more persons:

a) These persons shall be deemed to be jointly and severally liable to the Procuring Entity for the performance of the Contract;

b) these persons shall notify the Procuring Entity of their leader who shall have authority to bind the Contractor and each of these persons; and

c) the Contractor shall not alter its composition or legal status without the prior consent of the Procuring Entity.

1.15 Inspections and Audit by the Procuring Entity

Pursuant to paragraph 2.2 e. of Appendix B to the General Conditions, the Contractor shall permit and shall cause its subcontractors and sub-consultants to permit, the Procuring Entity and/or persons appointed by the Procuring Entity to inspect the Site and/or the accounts and records relating to the procurement process, selection and/or contract execution, and to have such accounts and records audited by auditors appointed by the Procuring Entity if requested by the Procuring Entity. The Contractor's and its Subcontractors' and sub- consultants' attention is drawn to Sub-Clause15.6 (Fraud and Corruption) which provides, interalia, that acts intended to materially impede the exercise of the Procuring Entity's inspection and audit rights constitute a prohibited practice subject to contract termination (as well as to a determination of ineligibility pursuant to the Procuring Entity's prevailing sanctions procedures).

2. THE PROCURING ENTITY

2.1 Right of Access to the Site

2.1.1 The Procuring Entity shall give the Contractor right of access to, and possession of, all parts of the Site within the time (or times) stated in the SCC. The right and possession may not be exclusive to the Contractor. If, under the Contract, the Procuring Entity is required to give (to the Contractor) possession of any foundation, structure, plant or means of access, the Procuring Entity shall do so in the time and manner stated in the Specification. However, the Procuring Entity may withhold any such right or possession until the Performance Security has been received.

2.1.2 If no such time is stated in the **SCC**, the Procuring Entity shall give the Contractor right of access to, and possession of, the Site within such times as required to enable the Contractor to proceed without disruption in accordance with the programme submitted under Sub-Clause 8.3 [Programme].

2.1.3 If the Contractor suffers delay and/or incurs Cost as a result of a failure by the Procuring Entity to give any such right or possession within such time, the Contractor shall give notice to the Engineer and shall been titled subject toSub-Clause20.1 [Contractor's Claims] to:

2.1.3.1 an extension of time for any such delay, if completion is or will be delayed, under Sub-Clause 8.4 [Extension of Time for Completion], and

2.1.3.2 payment of any such Cost-plus profit, which shall be included in the Contract Price.

2.1.4 After receiving this notice, the Engineer shall proceed in accordance with Sub-Clause3.5 [Determinations] to agree or determine these matters.

2.1.5 However, if and to the extent that the Procuring Entity's failure was caused by any error or delay by the Contractor, including an error in, or delay in the submission of, any of the Contractor's Documents, the Contractor shall not be entitled to such extension of time, Cost or profit.

2.2 Permits, Licenses or Approvals

The Procuring Entity shall provide, at the request of the Contractor, such reasonable assistance as to allow the Contractor to obtain properly:

a) Copies of the Laws of the Country which are relevant to the Contract but are not readily available, and

b) Any permits, licenses or approvals required by the Laws of the Country:

i) Which the Contractor is required to obtain under Sub-Clause 1.13 [Compliance with Laws],
ii) For the delivery of Goods, including clearance through customs, and
iii) For the export of Contractor's Equipment when it is removed from the Site.

2.3 Procuring Entity's Personnel

The Procuring Entity shall be responsible for ensuring that the Procuring Entity's Personnel and the Procuring Entity's other contractors on the Site:

a) co-operate with the Contractor's efforts under Sub-Clause 4.6 [Co-operation], and

b) take actions similar to those which the Contractor is required to take under sub-paragraphs (a), (b) and (c) of Sub-Clause 4.8 [Safety Procedures] and under Sub-Clause 4.18 [Protection of the

Environment].

2.4 Procuring Entity's Financial Arrangement

2.4.1 The Procuring Entity shall submit, before the Commencement Date and there after within 30 days after receiving any request from the Contractor, reasonable evidence that financial arrangements have been made and are being maintained which will enable the Procuring Entity to pay the Contract Price punctually (as estimated at that time) in accordance with Clause 14 [Contract Price and Payment]. Before the Procuring Entity makes any material change to his financial arrangements, the Procuring Entity shall give notice to the Contractor with detailed particulars.

2.4.2 In addition, if the Procuring Entity has notified to the Contractor that the Procuring Entity has suspended disbursements under its loan, which finances in whole or in part the execution of the Works, the Procuring Entity shall give notice of such suspension to the Contractor with detailed particulars, including the date of such notification, with a copy to the 2.4.3 Engineer, within 7 days of the Procuring Entity having received the suspension notification from the Procuring Entity. If alternative funds will be available in appropriate currencies to the Procuring Entity to continue making payments to the Contractor beyond a date 60 day after the date of Procuring Entity notification of the suspension, the Procuring Entity shall provide reasonable evidence in his notice of the extent to which such funds will be available.

2.5 Procuring Entity's Claims

2.5.1 If the Procuring Entity considers itself to be entitled to any payment under any Clause of these Conditions or otherwise in connection with the Contract, and/or to any extension of the Defects Notification Period, the Procuring Entity or the shall give notice and particulars to the Contractor. However, notice is not required for payments due under Sub-Clause 4.19 [Electricity, Water and Gas], under Sub-Clause 4.20 [Procuring Entity's Equipment and Free-Issue Materials], or for other services requested by the Contractor.

2.5.2 The notice shall be given as soon as practicable and no longer than 30 days after the Procuring Entity became aware, or should have become aware, of the event or circumstances giving rise to the claim. A notice relating to any extension of the Defects Notification Period shall be given before the expiry of such period.

2.5.3 The particulars shall specify the Clause or other basis of the claim and shall include substantiation of the amount and/or extension to which the Procuring Entity considers itself to be entitled in connection with the Contract. The Engineer shall then proceed in accordance with Sub-Clause 3.5 [Determinations] to agree or determine (i) the amount (if any) which the Procuring Entity is entitled to be paid by the Contractor, and/or(ii) the extension (if any) of the Defects Notification Period in accordance with Sub-Clause 11.3 [Extension of Defects Notification Period].

3. THE ENGINEER

3.1 Engineer's Duties and Authority

3.1.1 The Procuring Entity shall appoint the Engineer who shall carry out the duties assigned to him in the Contract. The Engineer's staff shall include suitably qualified engineers and other professionals who are competent to carry out these duties.

The Engineer shall have no authority to amend the Contract.
The Engineer may exercise the authority attributable to the Engineer as specified in or necessarily to be implied from the Contract. If the Engineer is required to obtain the approval of the Procuring Entity before exercising a specified authority, the requirements shall be as stated in the Particular Conditions. The Procuring Entity shall promptly inform the Contractor of any change to the authority attributed to the Engineer.

3.1.2 However, whenever the Engineer exercises a specified authority for which the Procuring Entity's approval is required, then (for the purposes of the Contract) the Procuring Entity shall be deemed to have given approval. Except as otherwise stated in these Conditions:

3.1.2.1 Whenever carrying out duties or exercising authority, specified in or implied by the Contract, the Engineer shall be deemed to act for the Procuring Entity; the Engineer has no authority to relieve either Party of any duties, obligations or

3.1.2.2 any approval, check, certificate, consent, examination, inspection, instruction, notice, proposal, request, test, or similar act by the Engineer (including absence of disapproval) shall not relieve the Contractor from any responsibility he has under the Contract, including responsibility for errors, omissions, discrepancies and non-compliances; and

3.1.2.3 any act by the Engineer in response to a Contractor's request except as otherwise expressly specified shall be notified in writing to the Contractor within 14 days of receipt.

3.1.2 The following provisions shall apply; The Engineer shall obtain the specific approval of the Procuring Entity before taking action under the-following Sub-Clauses of these Conditions:

a) Sub-Clause 4.12: agreeing or determining an extension of time and/or additional cost.

b) Sub-Clause13.1: instructing a Variation, except;

   i) In an emergency situation as determined by the Engineer, or

   ii) If such a Variation would increase the Accepted Contract Amount by less than the percentage specified in the **SCC**.

c) Sub-Clause13.3: Approving a proposal for Variation submitted by the Contractor in accordance with Sub Clause13.1or13.2.

d) Sub-Clause13.4: Specifying the amount payable in each of the applicable currencies.

3.1.3 Notwithstanding the obligation, as set out above, to obtain approval, if, in the opinion of the Engineer, an emergency occurs affecting the safety of life or of the Works or of adjoining property, he may, without relieving the Contractor of any of his duties and responsibility under the Contract, instruct the Contract or to execute all such work or to do all such things as may, in the opinion of the Engineer, be necessary to abate or reduce the risk. The Contractor shall forthwith comply, despite the absence of approval of the Procuring Entity, with any such instruction of the Engineer. The Engineer shall determine an addition to the Contract Price, in respect of such instruction, in accordance with Clause 13 and shall notify the Contractor accordingly, with a copy to the Procuring Entity.

3.2 Delegation by the Engineer

3.2.1 The Engineer may from time to time assign duties and delegate authority to assistants, and may also revoke such assignment or delegation. These assistants may include a resident engineer, and/or independent inspectors appointed to inspect and/or test items of Plant and/or Materials. The assignment, delegation or revocation shall be in writing and shall not take effect until copies have been received by both Parties. However, unless otherwise agreed by both Parties, the Engineer shall not delegate the authority to determine any matter in accordance with Sub-Clause3.5 [Determinations].

3.2.2 Each assistant, to whom duties have been assigned or authority has been delegated, shall only be authorized to issue instructions to the Contractor to the extent defined by the delegation. Any approval, check, certificate, consent, examination, inspection, instruction, notice, proposal, request, test, or similar act by an assistant, in accordance with the delegation, shall have the same effect as though the act had been an act of the Engineer. However:

a) Any failure to disapprove any work, Plant or Materials shall not constitute approval, and shall therefore not prejudice the right of the Engineer to reject the work, Plant or Materials;

b) If the Contractor questions any determination or instruction of an assistant, the Contractor may refer the matter to the Engineer, who shall promptly confirm, reverse or vary the determination or instruction.

3.3 Instructions of the Engineer

3.3.1 The Engineer may issue to the Contractor (at any time) instructions and additional or modified Drawings which may be necessary for the execution of the Works and the remedying of any defects, all in accordance with the Contract. The Contractor shall only take instructions from the Engineer, or from an assistant to whom the appropriate authority has been delegated under this Clause. If an instruction constitutes a Variation, Clause 13 [Variations and Adjustments] shall apply.

3.3.2 The Contractor shall comply with the instructions given by the Engineer or delegated assistant, on any matter related to the Contract. Whenever practicable, their instructions shall be given in writing. If the Engineer or a delegated assistant:

a) Gives an oral instruction,

b) Receives a written confirmation of the instruction, from (or on behalf of) the Contractor, within two working days after giving the instruction, and

c) Does not reply by issuing a written rejection and/or instruction within two working days after receiving the confirmation, then the confirmation shall constitute the written instruction of the Engineer or delegated assistant (as the case may be).

3.4 Replacement of the Engineer

If the Procuring Entity intends to replace the Engineer, the Procuring Entity shall, not less than 21 days before the intended date of replacement, give notice to the Contractor of the name, address and relevant experience of the intended replacement Engineer. If the Contractor considers the intended replacement

Engineer to be unsuitable, he has the right to raise objection against him by notice to the Procuring Entity, with supporting particulars, and the Procuring Entity shall give full and fair consideration to this objection.

3.5 Determinations

3.5.1 Whenever these Conditions provide that the Engineer shall proceed in accordance with this Sub-Clause 3.5 to agree or determine any matter, the Engineer shall consult with each Party in an endeavor to reach agreement. If agreement is not achieved, the Engineer shall make a fair determination in accordance with the Contract, taking due regard of all relevant circumstances.

3.5.2 The Engineer shall give notice to both Parties of each agreement or determination, with supporting particulars, within 30 days from the receipt of the corresponding claim or request except when otherwise specified. Each Party shall give effect to each agreement or determination unless and until revised under Clause 20 [Claims, Disputes and Arbitration].

4. THE CONTRACTOR

4.1 Contractor's General Obligations

4.1.1 The Contractor shall design (to the extent specified in the Contract), execute and complete the Works in accordance with the Contract and with the Engineer's instructions, and shall remedy any defects in the Works.

4.1.2 The Contractor shall provide the Plant and Contractor's Documents specified in the Contract, and all Contractor's Personnel, Goods, consumables and other things and services, whether of a temporary or permanent nature, required in and for this design, execution, completion and remedying of defects.

4.1.3 All equipment, material, and services to be incorporated in or required for the Works shall have their origin in any eligible source country as defined by the Procuring Entity.

4.1.4 The Contractor shall be responsible for the adequacy, stability and safety of all Site operations and of all methods of construction. Except to the extent specified in the Contract, the Contractor (i) shall be responsible for all Contractor's Documents, Temporary Works, and such design of each item of Plant and Materials as is required for the item to be in accordance with the Contract, and (ii) shall not otherwise be responsible for the design or specification of the Permanent Works.

4.1.5 The Contractor shall, whenever required by the Engineer, submit details of the arrangements and methods which the Contractor proposes to adopt for the execution of the Works. No significant alteration to these arrangements and methods shall be made without this having previously been notified to the Engineer.

4.1.6 The Contractor shall not commence any Works, including mobilization and/or pre-construction activities (e.g. limited clearance for haul roads, site accesses and work site establishment, geotechnical investigations or investigations to select ancillary features such as quarries and borrow pits), unless the Engineer is satisfied that appropriate measures are in place to address environmental, social, health and safety risks and impacts.

4.1.7 If the Contract specifies that the Contractor shall design any part of the Permanent Works, then unless otherwise stated in the Particular Conditions:

4.1.7.1 The Contractor shall submit to the Engineer the Contractor's Documents for this part in accordance with the procedures specified in the Contract;

4.1.7.2 These Contractor's Documents shall be in accordance with the Specification and Drawings, shall be written in the language for communications defined in Sub-Clause 1.4 [Law and Language], and shall include additional information required by the Engineer to add to the Drawings for co-ordination of each Party's designs;

4.1.7.3 The Contractor shall be responsible for this part and it shall, when the Works are completed, be fit for such purposes for which the part is intended as are specified in the Contract; and

4.1.7.4 Prior to the commencement of the Tests on Completion, the Contractor shall submit to the Engineer the “as- built” documents and, if applicable, operation and maintenance manuals in accordance with the Specification and insufficient detail for the Procuring Entity to operate, maintain, dismantle, reassemble, adjust and repair this part of the Works. Such part shall not be considered to be completed for thev purposes of taking-over under Sub-Clause 10.1 [Taking Over of the Works and Sections] until these documents and manuals have been submitted to the Engineer.

4.2 Performance Security

4.2.1 Performance security shall not be required for contracts estimated to cost less than Kenya shillings five million shillings.

4.2.2 The Contractor shall obtain (at his cost) a Performance Security for proper performance, in the amount stated in the **SCC** and denominated in the currency (ies) of the Contractor in a freely convertible currency acceptable to the Procuring Entity. If an amount is not stated in the **SCC,** this Sub-Clause shall not apply.

4.2.3 The Contractor shall deliver the Performance Security to the Procuring Entity within 14 days after receiving the Letter of Acceptance and shall send a copy to the Engineer. The Performance Security shall be issued by a reputable Procuring Entity or financial institution selected by the Contract or and shall be in the form annexed to the Particular Conditions, as stipulated by the Procuring Entity in the **SCC**, or in another form approved by the Procuring Entity.

4.2.4 The Contractor shall ensure that the Performance Security is valid and enforceable until the Contractor has executed and completed the Works and remedied any defects. If the terms of the Performance Security specify its expiry date, and the Contractor has not become entitled to receive the Performance Certificate by the date 30 days prior to the expiry date, the Contractor shall extend the validity of the Performance Security until the Works have been completed and any defects have been remedied.

4.2.5 The Procuring Entity shall not make a claim under the Performance Security, except for amounts to which the Procuring Entity is entitled under the Contract.

The Procuring Entity shall indemnify and hold the Contractor harmless against and from all damages, losses and expenses (including legal fees and expenses) resulting from a claim under the Performance Security to the extent to which the Procuring Entity was not entitled to make the claim.

4.2.6 The Procuring Entity shall return the Performance Security to the Contractor within 21 days after receiving a copy of the Performance Certificate.

4.2.7 Without limitation to the provisions of the rest of this Sub-Clause, whenever the Engineer determines an addition or are duction to the Contract Price as a result of a change in cost and/or legislation, or as a result of a Variation, amounting to more than 25 percent of the portion of the Contract Price payable in a specific currency, the Contractor shall at the Engineer's request promptly increase, or may decrease, as the case may be, the value of the Performance Security in that currency by an equal percentage.

4.3 Contractor's Representative

4.3.1 The Contractor shall appoint the Contractor's Representative and shall give him all authority necessary to act on the Contractor's behalf under the Contract. Unless the Contractor's Representative is named in the Contract, the Contractor shall, prior to the Commencement Date, submit to the Engineer for consent the name and particulars of the person the Contractor proposes to appoint as Contractor's Representative. If consent is withheld or subsequently revoked in terms of Sub-Clause 6.9 [Contractor's Personnel], or if the appointed person fails to act as Contractor's Representative, the Contractor shall similarly submit the name and particulars of another suitable person for such appointment.

The Contractor shall not, without the prior consent of the Engineer, revoke the appointment of the Contractor's Representative or appoint a replacement.

4.3.2 The whole time of the Contractor's Representative shall be given to directing the Contractor's performance of the Contract. If the Contractor's Representative is to be temporarily absent from the Site during the execution of the Works, a suitable replacement person shall be appointed, subject to the Engineer's prior consent, and the Engineer shall be notified accordingly.

4.3.3 The Contractor's Representative shall, on behalf of the Contractor, receive instructions under Sub-Clause 3.3 [Instructions of the Engineer].

The Contractor's Representative may delegate any powers, functions and authority to any competent person, and may at anytime revoke the delegation. Any delegation or revocation shall not take effect until the Engineer has received prior notice signed by the Contractor's Representative, naming the person and specifying the powers, functions and authority being delegated or revoked.

4.3.4 The Contractor's Representative shall be fluent in the language for communications defined in Sub-Clause1.4 [Law and Language]. If the Contractor's Representative's delegates are not fluent in the said language, the Contractor shall make competent interpreters available during all working hours in a number deemed sufficient by the Engineer.

4.4 Subcontractors

4.4.1 The Contractor shall not subcontract the whole of the Works.

4.4.2 The Contractor shall be responsible for the acts or defaults of any Subcontractor, his agents or employees, as if they were the acts or defaults of the Contractor. Unless otherwise stated in the Particular Conditions:

4.4.2.1 The Contractor shall not be required to obtain consent to suppliers solely of Materials, or to a subcontract for which the Subcontractor is named in the Contract;

4.4.2.2 The prior consent of the Engineer shall be obtained to other proposed Sub contractors;

4.4.2.3 the Contractor shall give the Procuring entity not less than 14 days' notice of the intended date of the commencement of each Subcontractor's work, and of the commencement of such work on the Site; and

4.4.2.4 each subcontract shall include provisions which would entitle the Procuring Entity to require the subcontract to be assigned to the Procuring Entity under Sub-Clause 4.5 [Assignment of Benefit of Subcontract] (if or when applicable) or in the event of termination under Sub-Clause15.2 [Termination by Procuring Entity].

4.4.3 The Contractor shall ensure that the requirements imposed on the Contractor by Sub-Clause 1.12 [Confidential Details] apply equally to each Subcontractor.

4.4.4 Where practicable, the Contractor shall give fair and reasonable opportunity for contractors from the Country to be appointed as Subcontractors.

4.5 Assignment of Benefit of Subcontract

If a Subcontractor's obligations extend beyond the expiry date of the relevant Defects Notification Period and the Engineer, prior to this date, instructs the Contractor to assign the benefit of such obligations to the Procuring Entity, then the Contractor shall do so. Unless otherwise stated in the assignment, the Contractor shall have no liability to the Procuring Entity for the work carried out by the Subcontractor after the assignment takes effect.

4.6 Co-operation

4.6.1 The Contractor shall, as specified in the Contract or as instructed by the Engineer, allow appropriate opportunities for carrying out work to:

4.6.1.1 The Procuring Entity's Personnel,

4.6.1.2 Any other contractors employed by the Procuring Entity, and

4.6.1.3 The personnel of any legally constituted public authorities, who may be employed in the execution on or near the Site of any work not included in the Contract.

4.6.2 Any such instruction shall constitute a Variation if and to the extent that it causes the Contractor to suffer delays and/or to incur Unforeseeable Cost. Services for these personnel and other contractors may include the use of Contractor's Equipment, Temporary Works or access arrangements which are the responsibility of the Contractor.

If, under the Contract, the Procuring Entity is required to give to the Contractor possession of any foundation, structure, plant or means of access in accordance with Contractor's Documents, the Contractor shall submit such documents to the Engineer in the time and manner stated in the Specification.

4.7 Setting Out

4.7.1 The Contractor shall set out the Works in relation to original points, lines and levels of reference specified in the Contractor notified by the Engineer. The Contractor shall be responsible for the correct positioning of all parts of the Works, and shall rectify any error in the positions, levels, dimensions or alignment of the Works.

The Procuring Entity shall be responsible for any errors in these specified or notified items of reference, but the Contractor shall use reasonable efforts to verify their accuracy before they are used.

4.7.2 If the Contractor suffers delay and/or incurs Cost from executing work which was necessitated by an error in these items of reference, and an experienced contractor could not reasonably have discovered such error and avoided this delay and/or Cost, the Contractor shall give notice to the Engineer and shall be entitled subject to Sub-Clause 20.1 [Contractor's Claims] to:

4.7.2.1 an extension of time for any such delay, if completion is or will be delayed, under Sub-Clause

8.4 [Extension of Time for Completion], and

4.7.2.2 payment of any such Cost-plus profit, which shall be included in the Contract Price.

4.7.3 After receiving this notice, the Engineer shall proceed in accordance with Sub-Clause 3.5 [Determinations] to agree or determine (i) whether and (if so) to what extent the error could not reasonably have been discovered, and (ii) the matters described in sub-paragraphs (a) and (b) above related to thise.

4.8 Safety Procedures

The Contractor shall:

a) Comply with all applicable safety regulations,
b) Take care for the safety of all persons entitled to be on the Site,
c) Use reasonable efforts to keep the Site and Works clear of unnecessary obstructions as to avoid danger to these persons,
d) provide fencing, lighting, guarding and watching of the Works until completion and taking over under Clause10 [Procuring Entity's Taking Over], and
e) Provide any Temporary Works (including roadways, footways, guards and fences) which may be necessary, because of the execution of the Works, for the use and protection of the public and of owners and occupiers of adjacent land.

4.9 Quality Assurance

4.9.1 The Contractor shall institute a quality assurance system to demonstrate compliance with the requirements of the Contract. The system shall be in accordance with the details stated in the Contract. The Engineer shall be entitled to audit any aspect of the system.

4.9.2 Details of all procedures and compliance documents shall be submitted to the Engineer for information before each design and execution stage is commenced. When any document of a technical nature is issued to the Engineer, evidence of the prior approval by the Contractor itself shall be apparent on the document itself. Compliance with the quality assurance system shall not relieve the Contractor of any of his duties, obligations or responsibilities under the Contract.

4.10 Site Data

4.10.1 The Procuring Entity shall have made available to the Contractor for his information, prior to the Base Date, all relevant data in the Procuring Entity's possession on sub-surface and hydrological conditions at the Site, including environmental aspects. The Procuring Entity shall similarly make available to the Contract or all such data which come into the Procuring Entity's possession after the Base Date. The Contractor shall be responsible for interpreting all such data.

4.10.2 To the extent which was practicable (taking account of cost and time), the Contractor shall be deemed to have obtained all necessary information as to risks, contingencies and other circumstances which may influence or affect the Tender or Works. To the same extent, the Contractor shall be deemed to have inspected and examined the Site, its surroundings, the above data and other available information, and to have been satisfied before submitting the Tender as to all relevant matters, including (without limitation):

a) The form and nature of the Site, including sub-surface conditions,
b) The hydrological and climatic conditions,
c) The extent and nature of the work and Goods necessary for the execution and completion of the Works and the remedying of any defects,
d) The Laws, procedures and labor practices of the Country, and
e) The Contractor's requirements for access, accommodation, facilities, personnel, power, transport, water and other services.

4.11 Sufficiency of the Accepted Contract Amount

4.11.1 The Contractor shall be deemed to:

4.11.1.1 Have satisfied itself as to the correctness and sufficiency of the Accepted Contract Amount, and

4.11.1.2 Have based the Accepted Contract Amount on the data, interpretations, necessary information, inspections, examinations and satisfaction as to all relevant matters referred to in Sub-Clause 4.10 [Site Data].

4.11.2 Unless otherwise stated in the Contract, the Accepted Contract Amount covers all the Contractor's obligations under the Contract (including those under Provisional Sums, if any) and all things necessary

for the proper execution and completion of the Works and the remedying of any defects.

4.12 Unforeseeable Physical Conditions

4.12.1 In this Sub-Clause, "physical conditions" means natural physical conditions and man-made and other physical obstructions and pollutants, which the Contractor encounters at the Site when executing the Works, including sub-surface and hydrological conditions but excluding climatic conditions.

4.12.2 If the Contractor encounters adverse physical conditions which he considers to have been Unforeseeable, the Contractor shall give notice to the Engineer as soon as practicable.

This notice shall describe the physical conditions, so that they can be inspected by the Engineer, and shall set out the reasons why the Contractor considers them to be Unforeseeable. The Contractor shall continue executing the Works, using such proper and reasonable measures as are appropriate for the physical conditions, and shall comply with any instructions which the Engineer may give. If an instruction constitutes a Variation, Clause 13 [Variations and Adjustments] shall apply.

4.12.3 If and to the extent that the Contractor encounters physical conditions which are Unforeseeable, gives such a notice, and suffers delay and/or incurs Cost due to these conditions, the Contractor shall be entitled subject to notice under Sub-Clause 20.1 [Contractor's Claims] to:

4.12.3.1 An extension of time for any such delay, if completion is or will be delayed, under Sub-Clause 8.4 [Extension of Time for Completion], and

4.12.3.2 Payment of any such Cost, which shall be included in the Contract Price.

4.12.4 Upon receiving such notice and inspecting and/or investigating these physical conditions, the Engineer shall proceed in accordance with Sub-Clause 3.5 [Determinations] to agree or determine (i) whether and (if so) to what extent these physical conditions were Unforeseeable, and (ii) the matters described in sub-paragraphs (a) and (b) above related to this extent.

4.12.5 However, before additional Cost is finally agreed or determined under sub-paragraph (ii), the Engineer may also review whether other physical conditions in similar parts of the Works (if any) were more favorable than could reasonably have been foreseen when the Contractor submitted the Tender. If and to the extent that these more favorable conditions were encountered, the Engineer may proceed in accordance with Sub-Clause 3.5 [Determinations] to agree or determine the reductions in Cost which were due to these conditions, which may be included (as deductions) in the Contract Price and Payment Certificates. However, the net effect of all adjustments under sub-paragraph (b) and all these reductions, for all the physical conditions encountered in similar parts of the Works, shall not result in any reduction in the Contract Price.

4.12.6 The Engineer shall take account of any evidence of the physical conditions foreseen by the Contractor when submitting the Tender, which shall be made available by the Contractor, but shall not be bound by the Contractor's interpretation of any such evidence.

4.13 Rights of Way and Facilities

Unless otherwise specified in the Contract the Procuring Entity shall provide effective access to and possession of the Site including special and/or temporary rights-of-way which are necessary for the Works. The Contractor shall obtain, at his risk and cost, any additional rights of way or facilities outside the Site which he may require for the purposes of the Works.

4.14 Avoidance of Interference

4.14.1 The Contractor shall not interfere unnecessarily or improperly with:

a) The convenience of the public, or

b) The access to and use and occupation of all roads and footpaths, irrespective of whether they are public or in the possession of the Procuring Entity or of others.

4.14.2 The Contractor shall indemnify and hold the Procuring Entity harmless against and from all damages, losses and expenses (including legal fees and expenses) resulting from any such unnecessary or improper interference.

4.15 Access Route

4.15.1 TheContractorshallbedeemedtohavebeensatisfiedastothesuitabilityandavailabilityofaccessroutestothe SiteatBaseDate.TheContractorshallusereasonableeffortstopreventanyroadorbridgefrombeingdamaged by the Contractor's traffic or by the Contractor's Personnel. These efforts shall include the proper use of appropriate vehicles and routes.

4.15.2 Except as otherwise stated in these Conditions:

a) The Contractor shall (as between the Parties) be responsible for any maintenance which may be required for his use of access routes;

b) the Contractor shall provide all necessary signs or directions along access routes, and shall obtain any permission which may be required from the relevant authorities for his use of routes, signs and directions;

c) the Procuring Entity shall not be responsible for any claims which may arise from the use or otherwise of any access route;

d) the Procuring Entity does not guarantee the suitability or availability of particular access routes; and

e) Costs due to non-suitability or non-availability, for the use required by the Contractor, of access routes shall be borne by the Contractor.

4.16 Transport of Goods

Unless otherwise stated in the Particular Conditions:

a) The Contractor shall give the Engineer not less than 21 days' notice of the date on which any Plant or a major item of other Goods will be delivered to the Site;

b) The Contractor shall be responsible for packing, loading, transporting, receiving, unloading, storing and protecting all Goods and other things required for the Works; and

c) The Contractor shall indemnify and hold the Procuring Entity harmless against and from all damages, losses and expenses (including legal fees and expenses) resulting from the transport of Goods, and shall negotiate and pay all claims arising from their transport.

4.17 Contractor's Equipment

The Contractor shall be responsible for all Contractor's Equipment. When brought onto the Site, Contractor's Equipment shall be deemed to be exclusively intended for the execution of the Works. The Contractor shall not remove from the Site any major items of Contractor's Equipment without the consent of the Engineer. However, consent shall not be required for vehicles transporting Goods or Contractor's Personnel off Site.

4.18 Protection of the Environment

4.18.1 The Contractor shall take all reasonable steps to protect the environment (both on and off the Site) and to limit damage and nuisance to people and property resulting from pollution, noise and other results of his operations.

4.18.2 The Contractor shall ensure that emissions, surfaced is charges and effluent from the Contractor's activities shall not exceed the values stated in the Specification or prescribed by applicable Laws.

4.19 Electricity, Water and Gas

4.19.1 The Contractor shall, except as stated below, be responsible for the provision of all power, water and other services he may require for his construction activities and to the extent defined in the Specifications, for the tests.

The Contractor shall be entitled to use for the purposes of the Works such supplies of electricity, water, gas and other services as may be available on the Site and of which details and prices are given in the Specification. The Contractor shall, at his risk and cost, provide any apparatus necessary for his use of these services and for measuring the quantities consumed.

4.19.2 The quantities consumed and the amounts due (at these prices) for such services shall be agreed or determined by the Engineer in accordance with Sub-Clause 2.5 [Procuring Entity's Claims] and Sub-Clause 3.5 [Determinations]. The Contractor shall pay these amounts to the Procuring Entity.

4.20 Procuring Entity's Equipment and Free-Issue Materials

4.20.1 The Procuring Entity shall make the Procuring Entity's Equipment (if any) available for the use of the Contractor in the execution of the Works in accordance with the details, arrangements and prices stated in the Specification. Unless otherwise stated in the Specification:

4.20.1.1 The Procuring Entity shall be responsible for the Procuring Entity's Equipment, except that

4.20.1.2 The Contractor shall be responsible for each item of Procuring Entity's Equipment whilst any of the Contractor's Personnel is operating it, driving it, directing it or in possession or control of it.

4.20.2 The appropriate quantities and the amounts due (at such stated prices) for the use of Procuring Entity's

Equipment shall be agreed or determined by the Engineer in accordance with Sub-Clause 2.5 [Procuring Entity's Claims] and Sub-Clause 3.5 [Determinations]. The Contractor shall pay these amounts to the Procuring Entity.

The Procuring Entity shall supply, free of charge, the "free-issue materials" (if any) in accordance with the details stated in the Specification. The Procuring Entity shall, at his risk and cost, provide these materials at the time and place specified in the Contract. The Contractor shall then visually inspect them and shall promptly give notice to the Engineer of any shortage, defect or default in these materials. Unless otherwise agreed by both Parties, the Procuring Entity shall immediately rectify the notified shortage, defect or default.

4.20.3 After this visual inspection, the free-issue materials shall come under the care, custody and control of the Contractor. The Contractor's obligations of inspection, care, custody and control shall not relieve the Procuring Entity of liability for any shortage, defect or default not apparent from a visual inspection.

4.21 Progress Reports

4.21.1 Unless otherwise stated in the Particular Conditions, monthly progress reports shall be prepared by the Contractor and submitted to the Engineer in six copies. The first report shall cover the period up to the end of the first calendar month following the Commencement Date. Reports shall be submitted monthly thereafter, each within 7 days after the last day of the period to which it relates.

4.21.2 Reporting shall continue until the Contractor has completed all work which is known to be outstanding at the completion date stated in the Taking-Over Certificate for the Works.

4.21.3 Each report shall include:

4.21.3.1 charts and detailed descriptions of progress, including each stage of design (if any), Contractor's Documents, procurement, manufacture, delivery to Site, construction, erection and testing; and including these stages for work by each nominated Subcontractor (as defined in Clause 5 [Nominated Subcontractors]),

4.21.3.2 photographs showing the status of manufacture and of progress on the Site;

4.21.3.3 for the manufacture of each main item of Plant and Materials, the name of the manufacturer, manufacture location, percentage progress, and the actual or expected dates of:

4.21.3.3.1 commencement of manufacture,

4.21.3.3.2 Contractor's inspections,

4.21.3.3.3 tests, and

4.21.3.3.4 shipment and arrival at the Site;

4.21.3.4 the details described in Sub-Clause 6.10 [Records of Contractor's Personnel and Equipment];

4.21.3.5 copies of quality assurance documents, test results and certificates of Materials;

4.21.3.6 list of notices given under Sub-Clause 2.5 [Procuring Entity's Claims] and notices given under Sub-Clause 20.1 [Contractor's Claims];

4.21.3.7 safety statistics, including details of any hazardous incidents and activities relating to environmental aspects and public relations; and

4.21.3.8 comparisons of actual and planned progress, with details of any events or circumstances which may jeopardize the completion in accordance with the Contract, and the measures being (or to be) adopted to overcome delays.

4.21.4 The Contractor shall provide immediate notification to the Engineer of incidents in the following categories. Full details of such incidents shall be provided to the Engineer within the time frame agreed with the Engineer.

4.21.4.1 confirmed or likely violation of any law or international agreement;

4.21.4.2 any fatality or serious injury;

4.21.4.3 significant adverse effects or damage to private property (e.g. vehicle accident, damage from fly rock, working beyond the boundary);

4.21.4.4 major pollution of drinking water aquifer or damage or destruction of rare or endangered habitat (including protected areas) or species; or

4.21.4.5 any allegation of sexual harassment or sexual misbehavior, child abuse, defilement, or other violations involving children.

4.22 Security of the Site

Unless otherwise stated in the Particular Conditions:

a) The Contractor shall be responsible for keeping unauthorized persons off the Site, and
b) Authorized persons shall be limited to the Contractor's Personnel and the Procuring Entity's Personnel; and to any other personnel notified to the Contractor, by the Procuring Entity or the Engineer, as authorized personnel of the Procuring Entity's other contractors on the Site.

4.23 Contractor's Operations on Site

4.23.1 The Contractor shall confine his operations to the Site, and to any additional areas which may be obtained by the Contractor and agreed by the Engineer as additional working areas. The Contractor shall take all necessary precautions to keep Contractor's Equipment and Contractor's Personnel within the Site and these additional areas, and to keep them off adjacent land.

During the execution of the Works, the Contractor shall keep the Site free from all unnecessary obstruction and shall store or dispose of any Contractor's Equipment or surplus materials. The Contractor shall clear away and remove from the Site any wreckage, rubbish and Temporary Works which are no longer required.

4.23.2 Upon the issue of a Taking-Over Certificate, the Contractor shall clear away and remove, from that part of the Site and Works to which the Taking-Over Certificate refers, all Contractor's Equipment, surplus material, wreckage, rubbish and Temporary Works. The Contractor shall leave that part of the Site and the Works in a clean and safe condition. However, the Contractor may retain on Site, during the Defects Notification Period, such Goods as are required for the Contractor to fulfil obligations under the Contract.

4.24 Fossils

4.24.1 All fossils, coins, articles of value or antiquity, and structures and other remains or items of geological or archaeological interest found on the Site shall be placed under the care and authority of the Procuring Entity. The Contractor shall take reasonable precautions to prevent Contractor's Personnel or other persons from removing or damaging any of these findings.

4.24.2 The Contractor shall, upon discovery of any such finding, promptly give notice to the Engineer, who shall issue instructions for dealing with it. If the Contractor suffers delay and/or incurs Cost from complying with the instructions, the Contractor shall give a further notice to the Engineer and shall be entitled subject to Sub-Clause 20.1 [Contractor's Claims] to:

a) an extension of time for any such delay, if completion is or will be delayed, under Sub-Clause 8.4 [Extension of Time for Completion], and
b) payment of any such Cost, which shall be included in the Contract Price.

After receiving this further notice, the Engineer shall proceed in accordance with Sub-Clause 3.5 [Determinations] to agree or determine these matters.

5. NOMINATED SUB CONTRACTORS

5.1 Definition of "nominated Subcontractor

In the Contract, "nominated Subcontractor" means a Subcontractor:

a) Who is stated in the Contract as being a nominated Subcontractor, or
b) whom the Engineer, under Clause 13 [Variations and Adjustments], instructs the Contractor to employ as a Subcontractor subject to Sub-Clause 5.2 [Objection to Notification].

5.2 Objection to Nomination

The Contractor shall not be under any obligation to employ a nominated Subcontractor against whom the Contractor raises reasonable objection by notice to the Engineer as soon as practicable, with supporting particulars. An objection shall be deemed reasonable if it arises from (among other things) any of the following matters, unless the Procuring Entity agrees in writing to indemnify the Contractor against and from the consequences of the matter:

a) there are reasons to believe that the Subcontractor does not have sufficient competence, resources or financial strength;
b) the nominated Subcontract or does not accept to indemnify the Contractor against and from any negligence or misuse of Goods by the nominated Subcontractor, his agents and employees; or
c) the nominated Subcontractor does not accept to enter into a subcontract which specifies that, for the subcontracted work (including design, if any), the nominated Subcontract or shall:
    i) undertake to the Contractor such obligations and liabilities as will enable the Contractor to

discharge his obligations and liabilities under the Contract;

ii) indemnify the Contractor against and from all obligations and liabilities arising under or in connection with the Contract and from the consequences of any failure by the Subcontractor to perform these obligations or to fulfil these liabilities, and

iii) be paid only if and when the Contractor has received from the Procuring Entity payments for sums due under the Subcontract referred to under Sub-Clause 5.3 [Payment to nominated Subcontractors].

5.3 Payments to nominated Subcontractors

The Contractor shall pay to the nominated Subcontractor the amounts shown on the nominated Subcontractor's invoices approved by the Contractor which the Engineer certifies to be due in accordance with the subcontract. These amounts plus other charges shall be included in the Contract Price in accordance with sub-paragraph (b) of Sub-Clause 13.5 [Provisional Sums], except as stated in Sub-Clause 5.4 [Evidence of Payments].

5.4 Evidence of Payments

Before issuing a Payment Certificate which includes an amount payable to a nominated Subcontractor, the Engineer may request the Contractor to supply reasonable evidence that the nominated Subcontractor has received all amounts due in accordance with previous Payment Certificates, less applicable deductions for retention or otherwise. Unless the Contractor:

a) Submits this reasonable evidence to the Engineer, or

b) i) satisfies the Engineer in writing that the Contractor is reasonably entitled to withhold or refuse to pay these amounts, and

5.4.1.1.1.1 submits to the Engineer reasonable evidence that the nominated Subcontractor has been notified of the Contractor's entitlement, then the Procuring Entity may (at his sole discretion) pay, direct to the nominated Subcontractor, part or all of such amounts previously certified (less applicable deductions) as are due to the nominated Subcontractor and for which the Contractor has failed to submit the evidence described in sub-paragraphs (a) or (b) above. The Contractor shall then repay, to the Procuring Entity, the amount which the nominated Subcontractor was directly paid by the Procuring Entity.

6. STAFF AND LABOR

6.1 Engagement of Staff and Labor

Except as otherwise stated in the Specification, the Contractor shall make arrangements for the engagement of all staff and labor, local or otherwise, and for their payment, feeding, transport, and, when appropriate, housing. The Contractor is encouraged, to the extent practicable and reasonable, to employ staff and labor with appropriate qualifications and experience from sources within the Country.

6.2 Rates of Wages and Conditions of Labor

6.2.1 The Contractor shall pay rates of wages, and observe conditions of labor, which are not lower than those established for the trade or industry where the work is carried out. If no established rates or conditions are applicable, the Contractor shall pay rates of wages and observe conditions which are not lower than the general level of wages and conditions observed locally by Procuring Entity's whose trade or industry is similar to that of the Contractor.

6.2.2 The Contractor shall inform the Contractor's Personnel about their liability to pay personal income taxes in Kenya in respect of such of their salaries, wages, allowances and any benefits as are subject to tax under the Laws of Kenya for the time being in force, and the Contractor shall perform such duties in regard to such deductions there of as may be imposed on him by such Laws.

6.3 Persons in the Service of Procuring Entity

The Contractor shall not recruit, or attempt to recruit, staff and labor from amongst the Procuring Entity's Personnel.

6.4 Labor Laws

6.4.1 The Contractor shall comply with all the relevant labor Laws applicable to the Contractor's Personnel, including Laws relating to their employment, health, safety, welfare, immigration and emigration, and

shall allow them all their legal rights.

6.4.2 The Contractor shall require his employees to obey all applicable Laws, including those concerning safety at work.

6.5 Working Hours

No work shall be carried out on the Site on locally recognized days of rest, or outside the normal working hours stated in the **SCC**, unless:

a) Otherwise stated in the Contract,
b) The Engineer gives consent, or
c) The work is unavoidable, or necessary for the protection of life or property or for the safety of the Works, in which case the Contractor shall immediately advise the Engineer.

6.6 Facilities for Staff and Labor

6.6.1 Except as otherwise stated in the Specification, the Contractor shall provide and maintain all necessary accommodation and welfare facilities for the Contractor's Personnel. The Contractor shall also provide facilities for the Procuring Entity's Personnel as stated in the Specification.

6.6.2 The Contractor shall not permit any of the Contractor's Personnel to maintain any temporary or permanent living quarters within the structures forming part of the Permanent Works.

6.7 Health and Safety

6.7.1 The Contractor shall at all times take all reasonable precautions to maintain the health and safety of the Contractor's Personnel. In collaboration with local health authorities, the Contractor shall ensure that medical staff, first aid facilities, sick bay and ambulance service are available at all times at the Site and at any accommodation for Contractor's and Procuring Entity's Personnel, and that suitable arrangements are made for all necessary welfare and hygiene requirements and for the prevention of epidemics.

6.7.2 The Contractor shall appoint an accident prevention officer at the Site, responsible for maintaining safety and protection against accidents. This person shall be qualified for this responsibility and shall have the authority to issue instructions and take protective measures to prevent accidents. Throughout the execution of the Works, the Contractor shall provide whatever is required by this person to exercise this responsibility and authority.

6.7.3 The Contractor shall send, to the Engineer, details of any accident as soon as practicable after its occurrence. The Contractor shall maintain records and make reports concerning health, safety and welfare of persons, and damage to property, as the Engineer may reasonably require.

6.7.4 HIV-AIDS Prevention. The Contractor shall conduct an HIV-AIDS awareness programme via an approved service provider and shall undertake such other measures as are specified in this Contract to reduce the risk of the transfer of the HIV virus between and among the Contractor's Personnel and the local community, to promote early diagnosis and to assist affected individuals.

6.8 Contractor's Superintendence

6.8.1 Throughout the execution of the Works, and as long thereafter as is necessary to fulfil the Contractor's obligations, the Contractor shall provide all necessary superintendence to plan, arrange, direct, manage, inspect and test the work.

6.8.2 Superintendence shall be given by a sufficient number of persons having adequate knowledge of the language for communications (defined in Sub-Clause 1.4 [Law and Language]) and of the operations to be carried out (including the methods and techniques required, the hazards likely to be encountered and methods of preventing accidents), for the satisfactory and safe execution of the Works.

6.9 Contractor's Personnel

6.9.1 The Contractor's Personnel specified in the **SCC** shall be appropriately qualified, skilled and experienced in their respective trades or occupations. The Engineer may require the Contractor to remove (or cause to be removed) any person employed on the Site or Works, including the Contractor's Representative if applicable, who:

a) Persists in any misconduct or lack of care,
b) Carries out duties incompetently or negligently,

c) Fails to conform with any provisions of the Contract,
d) Persists in any conduct which is prejudicial to safety, health, or the protection of the environment, or
e) Based on reasonable evidence, is determined to have engaged in Fraud and Corruption during the execution of the Works.

6.9.2 If appropriate, the Contractor shall then appoint (or cause to be appointed) a suitable replacement person.

6.10 Records of Contractor's Personnel and Equipment

The Contractor shall submit, to the Engineer, details showing the number of each class of Contractor's Personnel and of each type of Contractor's Equipment on the Site. Details shall be submitted each calendar month, in a form approved by the Engineer, until the Contractor has completed all work which is known to be outstanding at the completion date stated in the Taking-Over Certificate for the Works.

6.11 Disorderly Conduct

The Contractor shall at all times take all reasonable precautions to prevent any unlawful, riotous or disorderly conduct by or amongst the Contractor's Personnel, and to preserve peace and protection of persons and property on and near the Site.

6.12 Foreign Personnel

6.12.1 The Contractor may bring in to the Country any foreign personnel who are necessary for the execution of the Works to the extent allowed by the applicable Laws. The Contractor shall ensure that these personnel are provided with the required residence visas and work permits. The Procuring Entity will, if requested by the Contractor, use his Lowest endeavors in a timely and expeditious manner to assist the Contract or in obtaining any local, state, national or government permission required for bringing in the Contractor's personnel.

6.12.2 The Contractor shall be responsible for the return of these personnel to the place where they were recruited or to their domicile. In the event of the death in the Country of any of these personnel or members of their families, the Contractor shall similarly be responsible for making the appropriate arrangements for their return or burial.

6.13 Supply of Foodstuffs

6.13.1 The Contractor shall arrange for the provision of a sufficient supply of suitable food as may be stated in the Specification at reasonable prices for the Contractor's Personnel for the purposes of or in connection with the Contract.

6.14 Supply of Water

The Contractor shall, having regard to local conditions, provide on the Site an adequate supply of drinking and other water for the use of the Contractor's Personnel.

6.15 Measures against Insect and Pest Nuisance

The Contractor shall at all times take the necessary precautions to protect the Contractor's Personnel employed on the Site from insect and pest nuisance, and to reduce the danger to their health. The Contractor shall comply with all the regulations of the local health authorities, including use of appropriate insecticide.

6.16 Alcoholic Liquor or Drugs

The Contractor shall not, otherwise than in accordance with the Laws of the Country, import, sell, give, barter or otherwise dispose of any alcoholic liquor or drugs, or permit or allow importation, sale, gift, barter or disposal thereof by Contractor's Personnel.

6.17 Arms and Ammunition

The Contractor shall not give, barter, or otherwise dispose of, to any person, any arms or ammunition of any kind, or allow Contractor's Personnel to do so.

6.18 Festivals and Religious Customs

The Contractor shall respect the Country's recognized festivals, days of rest and religious or other customs.

6.19 Funeral Arrangements

The Contractor shall be responsible, to the extent required by local regulations, for making any funeral arrangements for any of his local employees who may die while engaged upon the Works.

6.20 Prohibition of Forced or Compulsory Labor

The Contractor shall not employ forced labor, which consists of any work or service, not voluntarily performed, that is exacted from an individual under threat of force or penalty, and includes any kind of involuntary or compulsory labor, such as indentured labor, bonded labor or similar labor-contracting arrangements.

6.21 Prohibition of Harmful Child Labor

The Contractor shall not employ children in a manner that is economically exploitative, or is likely to be hazardous, or to interfere with, the child's education, or to be harmful to the child's health or physical, mental, spiritual, moral, or social development. Where the relevant labor laws of the Country have provisions for employment of minors, the Contract or shall follow those laws applicable to the Contractor. Children below the age of 18 years shall not be employed in dangerous work.

6.22 Employment Records of Workers

The Contractor shall keep complete and accurate records of the employment of labor at the Site. The records shall include the names, ages, genders, hours worked and wages paid to all workers. These records shall be summarized on a monthly basis and submitted to the Engineer. These records shall be included in the details to be submitted by the Contractor under Sub-Clause 6.10 [Records of Contractor's Personnel and Equipment].

6.23 Workers' Organizations

The Contractor shall comply with laws on workers' rights to form and to join workers' organizations without interference and to bargain collectively.

6.24 Non-Discrimination and Equal Opportunity

The Contractor shall not make employment decisions on the basis of personal characteristics unrelated to inherent job requirements. The Contractor shall base the employment relationship on the principle of equal opportunity and fair treatment and shall not discriminate with respect to aspects of the employment relationship, including recruitment and hiring, compensation (including wages and benefits), working conditions and terms of employment, access to training, promotion, termination of employment or retirement, and discipline.

7. PLANT, MATERIALS AND WORKMANSHIP

7.1 Manner of Execution

The Contractor shall carry out the manufacture of Plant, the production and manufacture of Materials, and all other execution of the Works:

a) In the manner (if any) specified in the Contract,
b) In a proper workman like and careful manner, in accordance with recognized good practice, and
c) With properly equipped facilities and non-hazardous Materials, except as otherwise specified in the Contract.

7.2 Samples

The Contractor shall submit the following samples of Materials, and relevant information, to the Engineer for consent prior to using the Materials in or for the Works:

a) manufacturer's standard samples of Materials and samples specified in the Contract, all at the Contractor's cost, and
b) additional samples instructed by the Engineer as a Variation.
Each sample shall be labeled as to origin and intended use in the Works.

7.3 Inspection

7.3.1 The Procuring Entity's Personnel shall at all reasonable times:

7.3.1.1 Have full access to all parts of the Site and to all places from which natural Materials are being obtained, and

7.3.1.2 During production, manufacture and construction (at the Site and elsewhere), be entitled to examine, inspect, measure and test the materials and workmanship, and to check the progress of manufacture of Plant and production and manufacture of Materials.

7.3.2 The Contractor shall give the Procuring Entity's Personnel full opportunity to carry out these activities,

including providing access, facilities, permissions and safety equipment. No such activity shall relieve the Contractor from any obligation or responsibility.

The Contractor shall give notice to the Engineer whenever any work is ready and before it is covered up, put out of sight, or packaged for storage or transport. The Engineer shall then either carry out the examination, inspection, measurement or testing without unreasonable delay, or promptly give notice to the Contractor that the Engineer does not require to do so. If the Contractor fails to give the notice, he shall, if and when required by the Engineer, uncover the work and thereafter reinstate and make good, all at the Contractor's cost.

7.4 Testing

7.4.1 This Sub-Clause shall apply to all tests specified in the Contract, other than the Tests after Completion (if any).

7.4.2 Except as otherwise specified in the Contract, the Contractor shall provide all apparatus, assistance, documents and other information, electricity, equipment, fuel, consumables, instruments, labor, materials, and suitably qualified and experienced staff, as are necessary to carry out the specified tests efficiently. The Contractor shall agree, with the Engineer, the time and place for the specified testing of any Plant, Materials and other parts of the Works.

The Engineer may, under Clause 13 [Variations and Adjustments], vary the location or details of specified tests, or instruct the Contractor to carry out additional tests. If these varied or additional tests show that the tested Plant, Materials or workmanship is not in accordance with the Contract, the cost of carrying out this Variation shall be borne by the Contractor, notwithstanding other provisions of the Contract.

7.4.3 The Engineer shall give the Contractor not less than 24 hours' notice of the Engineer's intention to attend the tests. If the Engineer does not attend at the time and place agreed, the Contractor may proceed with the tests, unless otherwise instructed by the Engineer, and the tests shall then be deemed to have been made in the Engineer's presence.

If the Contractor suffers delay and/or incurs Cost from complying with these instructions or as a result of a delay for which the Procuring Entity is responsible, the Contractor shall give notice to the Engineer and shall be entitled subject to Sub-Clause 20.1 [Contractor's Claims] to:

7.4.3.1 An extension of time for any such delay, if completion is or will be delayed, under Sub-Clause 8.4 [Extension of Time for Completion], and

7.4.3.2 Payment of any such Cost-plus profit, which shall be included in the Contract Price.

7.4.4 After receiving this notice, the Engineer shall proceed in accordance with Sub-Clause 3.5 [Determinations] to agree or determine these matters.

The Contractor shall promptly forward to the Engineer duly certified reports of the tests. When the specified tests have been passed, the Engineer shall endorse the Contractor's test certificate, or issue a certificate to him, to that effect. If the Engineer has not attended the tests, he shall be deemed to have accepted the readings as accurate.

7.5 Rejection

7.5.1 If, as a result of an examination, inspection, measurement or testing, any Plant, Materials or workmanship is found to be defective or otherwise not in accordance with the Contract, the Engineer may reject the Plant, Materials or workmanship by giving notice to the Contractor, with reasons. The Contractor shall then promptly make good the defect and ensure that the rejected item complies with the Contract.

7.5.2 If the Engineer requires this Plant, Materials or workmanship to be retested, the tests shall be repeated under the same terms and conditions. If the rejection and retesting cause the Procuring Entity to incur additional costs, the Contractor shall subject to Sub-Clause 2.5 [Procuring Entity's Claims] pay these costs to the Procuring Entity.

7.6 Remedial Work

7.6.1 Notwithstanding any previous test or certification, the Engineer may instruct the Contractor to:

7.6.1.1 remove from the Site and replace any Plant or Materials which is not in accordance with the Contract,

7.6.1.2 remove and re-execute any other work which is not in accordance with the Contract, and

7.6.1.3 execute any work which is urgently required for the safety of the Works, whether because of an accident, unforeseeable event or otherwise.

7.6.2 The Contractor shall comply with the instruction within a reasonable time, which shall be the time (if any) specified in the instruction, or immediately if urgency is specified under sub-paragraph (c).

7.6.3 If the Contractor fails to comply with the instruction, the Procuring Entity shall be entitled to employ and

pay other persons to carry out the work. Except to the extent that the Contractor would have been entitled to payment for the work, the Contractor shall subject to Sub-Clause 2.5 [Procuring Entity's Claims] pay to the Procuring Entity all costs arising from this failure.

7.7 Ownership of Plant and Materials

Except as otherwise provided in the Contract, each item of Plant and Materials shall, to the extent consistent with the Laws of the Country, become the property of the Procuring Entity at whichever is the earlier of the following times, free from liens and other encumbrances:

a) When it is incorporated in the Works;
b) When the Contractor is paid the corresponding value of the Plant and Materials under Sub-Clause 8.10 [Payment for Plant and Materials in Event of Suspension].

7.8 Royalties

Unless otherwise stated in the Specification, the Contractor shall pay all royalties, rents and other payments for:

a) Natural Materials obtained from outside the Site, and
b) The disposal of material from demolitions and excavations and of other surplus material (whether natural or man-made), except to the extent that disposal areas within the Site are specified in the Contract.

8. COMMENCEMENT, DELAYS AND SUSPENSION

8.1 Commencement of Works

8.1.1 Except as otherwise specified in the Special Conditions of Contract, the Commencement Date shall be the date at which the following precedent conditions have all been fulfilled and the Engineer's notification recording the agreement of both Parties on such fulfilment and instructing to commence the Work is received by the Contractor:

8.1.1.1 Contract by relevant authorities of the Country;

8.1.1.2 delivery to the Contractor of reasonable evidence of the Procuring Entity's financial arrangements (under Sub-Clause 2.4 [Procuring Entity's Financial Arrangements]);

8.1.1.3 signature of the Contract Agreement by both Parties, and if required, approval of the except if otherwise specified in the **SCC**, effective access to and possession of the Site given to the Contractor together with such permission(s) under (a) of Sub-Clause 1.13 [Compliance with Laws] as required for the commencement of the Works

8.1.1.4 receipt by the Contract or of the Advance Payment under Sub-Clause14.2 [Advance Payment] provided that the corresponding Procuring Entity guarantee has been delivered by the Contractor.

8.1.2 If the said Engineer's instruction is not received by the Contractor within 180 days from his receipt of the Letter of Acceptance, the Contractor shall be entitled to terminate the Contract under Sub-Clause 16.2 [Termination by Contractor].

8.1.3 The Contractor shall commence the execution of the Works as soon as is reasonably practicable after the Commencement Date and shall then proceed with the Works with due expedition and without delay.

8.2 Time for Completion

The Contractor shall complete the whole of the Works, and each Section (if any), within the Time for Completion for the Works or Section (as the case may be), including:

a) achieving the passing of the Tests on Completion, and
b) completing all work which is stated in the Contract as being required for the Works or Section to be considered to be completed for the purposes of taking-over under Sub-Clause 10.1 [Taking Over of the Works and Sections].

8.3 Programme

8.3.1 The Contractor shall submit a detailed time programme to the Engineer within 14 days after receiving the notice under Sub-Clause 8.1 [Commencement of Works]. The Contractor shall also submit a revised programme whenever the previous programme is inconsistent with actual progress or with the Contractor's obligations. Each programme shall include:

8.3.1.1 the order in which the Contractor intends to carry out the Works, including the anticipated timing of each stage of design (if any), Contractor's Documents, procurement, manufacture of Plant, delivery to Site, construction, erection and testing,

8.3.1.2 each of these stages for work by each nominated Subcontractor (as defined in Clause 5 [Nominated Subcontractors]),

8.3.1.3 the sequence and timing of inspections and tests specified in the Contract, and

8.3.1.4 a supporting report which includes:

8.3.1.4.1 a general description of the methods which the Contract or intends to adopt, and of the major stages, in the execution of the Works, and

8.3.1.4.2 details showing the Contractor's reasonable estimate of the number of each class of Contractor's Personnel and of each type of Contractor's Equipment, required on the Site for each major stage.

8.3.2 Unless the Engineer, within 14 days after receiving a programme, gives notice to the Contractor stating the extent to which it does not comply with the Contract, the Contractor shall proceed in accordance with the programme, subject to his other obligations under the Contract. The Procuring Entity's Personnel shall be entitled to rely upon the programme when planning their activities.

8.3.3 The Contractor shall promptly give notice to the Engineer of specific probable future events or circumstances which may adversely affect the work, increase the Contract Price or delay the execution of the Works. The Engineer may require the Contractor to submit an estimate of the anticipated effect of the future event or circumstances, and/or a proposal under Sub-Clause 13.3 [Variation Procedure].

8.3.4 If, at anytime, the Engineer gives notice to the Contractor that a programme fails (to the extent stated) to comply with the Contract or to be consistent with actual progress and the Contractor's stated intentions, the Contractor shall submit a revised programme to the Engineer in accordance with this Sub-Clause.

8.4 Extension of Time for Completion

8.4.1 The Contractor shall be entitled subject to Sub-Clause 20.1 [Contractor's Claims] to an extension of the Time for Completion if and to the extent that completion for the purposes of Sub-Clause10.1 [Taking Over of the Works and Sections] is or will be delayed by any of the following causes:

8.4.1.1 a Variation (unless an adjustment to the Time for Completion has been agreed under Sub-Clause 13.3 [Variation Procedure]) or other substantial change in the quantity of an item of work included in the Contract,

8.4.1.2 a cause of delay giving an entitlement to extension of time under a Sub-Clause of these Conditions,

8.4.1.3 exceptionally adverse climatic conditions,

8.4.1.4 Unforeseeable shortages in the availability of personnel or Goods caused by epidemic or governmental actions, or

8.4.1.5 Any delay, impediment or prevention caused by or attributable to the Procuring Entity, the Procuring Entity's Personnel, or the Procuring Entity's other contractors.

8.4.2 If the Contractor considers itself to be entitled to an extension of the Time for Completion, the Contractor shall give notice to the Engineer in accordance with Sub-Clause 20.1 [Contractor's Claims]. When determining each extension of time under Sub-Clause 20.1, the Engineer shall review previous determinations and may increase, but shall not decrease, the total extension of time.

8.5 Delays Caused by Authorities

If the following conditions apply, namely:

a) The Contractor has diligently followed the procedures laid down by the relevant legally constituted public authorities in the Country,

b) These authorities delay or disrupt the Contractor's work, and

c) The delay or disruption was Unforeseeable, then this delay or disruption will be considered as a cause of delay under sub-paragraph (b) of Sub-Clause 8.4 [Extension of Time for Completion].

8.6 Rate of Progress

8.6.1 If, at any time:

8.6.1.1 Actual progress is too slow to complete within the Time for Completion, and/or

8.6.1.2 Progress has fallen (or will fall) behind the current programme under Sub-Clause 8.3 [Programme], other than as a result of a cause listed in Sub-Clause 8.4 [Extension of Time for Completion], then the Engineer may instruct the Contractor to submit, under Sub-Clause 8.3 [Programme], a revised programme and supporting report describing the revised methods which the Contractor proposes to adopt in order to expedite progress and complete within the Time for

Completion.

Unless the Engineer notifies otherwise, the Contractor shall adopt these revised methods, which may require increases in the working hours and/or in the numbers of Contractor's Personnel and/or Goods, at the risk and cost of the Contractor. If these revised methods cause the Procuring Entity to incur additional costs, the Contractor shall subject to notice under Sub-Clause 2.5 [Procuring Entity's Claims] pay these costs to the Procuring Entity, in addition to delay damages (if any) under Sub-Clause 8.7 below.

8.6.2 Additional costs of revised methods including acceleration measures, instructed by the Engineer to reduce delays resulting from causes listed under Sub-Clause 8.4 [Extension of Time for Completion] shall be paid by the Procuring Entity, without generating, however, any other additional payment benefit to the Contractor.

8.7 Delay Damages

8.7.1 If the Contractor fails to comply with Sub-Clause 8.2 [Time for Completion], the Contractor shall subject to notice under Sub-Clause 2.5 [Procuring Entity's Claims] pay delay damages to the Procuring Entity for this default. These delay damages shall be the sum stated in the **SCC**, which shall be paid for everyday which shall elapse between the relevant Time for Completion and the date stated in the Taking-Over Certificate. However, the total amount due under this Sub-Clause shall not exceed the maximum amount of delay damages (if any) stated in the **SCC**.

8.7.2 These delay damages shall be the only damages due from the Contractor for such default, other than in the event of termination under Sub-Clause 15.2 [Termination by Procuring Entity] prior to completion of the Works. These damages shall not relieve the Contractor from his obligation to complete the Works, or from any other duties, obligations or responsibilities which he may have under the Contract.

8.8 Suspension of Work

8.8.1 The Engineer may at any time instruct the Contractor to suspend progress of part or all of the Works. During such suspension, the Contractor shall protect, store and secure such part or the Works against any deterioration, loss or damage.

8.8.2 The Engineer may also notify the cause for the suspension. If and to the extent that the cause is notified and is the responsibility of the Contractor, the following Sub-Clauses 8.9, 8.10 and 8.11 shall not apply.

8.9 Consequences of Suspension

8.9.1 If the Contractor suffers delay and/or incurs Cost from complying with the Engineer's instructions under Sub- Clause 8.8 [Suspension of Work] and/or from resuming the work, the Contractor shall give notice to the Engineer and shall been titled subject to Sub-Clause 20.1 [Contractor's Claims] to:

8.9.1.1 An extension of time for any such delay, if completion is or will be delayed, under Sub-Clause 8.4 [Extension of Time for Completion], and

8.9.1.2 Payment of any such Cost, which shall be included in the Contract Price.

After receiving this notice, the Engineer shall proceed in accordance with Sub-Clause 3.5 [Determinations] to agree or determine these matters.

8.9.2 The Contractor shall not be entitled to an extension of time for, or to payment of the Cost incurred in, making good the consequences of the Contractor's faulty design, workmanship or materials, or of the Contractor's failure to protect, store or secure in accordance with Sub-Clause 8.8 [Suspension of Work].

8.10 Payment for Plant and Materials in Event of Suspension

The Contractor shall be entitled to payment of the value (as at the date of suspension) of Plant and/or Materials which have not been delivered to Site, if:

a) the work on Plant or delivery of Plant and/or Materials has been suspended for more than 30 days, and
b) the Contractor has marked the Plant and/or Materials as the Procuring Entity's property in accordance with the Engineer's instructions.

8.11 Prolonged Suspension

If the suspension under Sub-Clause 8.8 [Suspension of Work] has continued for more than 84 days, the Contractor may request the Engineer's permission to proceed. If the Engineer does not give permission within 30 days after being requested to do so, the Contractor may, by giving notice to the Engineer, treat

the suspension as an omission under Clause 13 [Variations and Adjustments] of the affected part of the Works. If the suspension affects the whole of the Works, the Contractor may give notice of termination under Sub-Clause 16.2 [Termination by Contractor].

8.12 Resumption of Work

After the permission or instruction to proceed is given, the Contractor and the Engineer shall jointly examine the Works and the Plant and Materials affected by the suspension. The Contractor shall make good any deterioration or defect in or loss of the Works or Plant or Materials, which has occurred during the suspension after receiving from the Engineer an instruction to this effect under Clause13 [Variations and Adjustments].

9. TESTS ON COMPLETION

9.1 Contractor's Obligations

9.1.1 The Contractor shall carry out the Tests on Completion in accordance with this Clause and Sub-Clause 7.4 [Testing], after providing the documents in accordance with sub-paragraph (d) of Sub-Clause 4.1 [Contractor's General Obligations].

9.1.2 The Contractor shall give to the Engineer not less than 21 days' notice of the date after which the Contract or will be ready to carry out each of the Tests on Completion. Unless otherwise agreed, Tests on Completion shall be carried out within 14 days after this date, on such day or days as the Engineer shall instruct.

9.1.3 In considering the results of the Tests on Completion, the Engineer shall make allowances for the effect of any use of the Works by the Procuring Entity on the performance or other characteristics of the Works. As soon as the Works, or a Section, have passed any Tests on Completion, the Contractor shall submit a certified report of the results of these Tests to the Engineer.

9.2 Delayed Tests

9.2.1 If the Tests on Completion are being unduly delayed by the Procuring Entity, Sub-Clause 7.4 [Testing] (fifth paragraph) and/or Sub-Clause 10.3 [Interference with Tests on Completion] shall be applicable.

If the Tests on Completion are being unduly delayed by the Contractor, the Engineer may by notice require the Contractor to carry out the Tests within 21 days after receiving the notice. The Contractor shall carry out the Tests on such day or days within that period as the Contract or may fix and of which he shall give notice to the Engineer.

If the Contractor fails to carry out the Tests on Completion within the period of 21 days, the Procuring Entity's Personnel may proceed with the Tests at the risk and cost of the Contractor. The Tests on Completion shall then be deemed to have been carried out in the presence of the Contract or and the results of the Tests shall be accepted as accurate.

9.3 Retesting

If the Works, or a Section, fail to pass the Tests on Completion, Sub-Clause 7.5 [Rejection] shall apply, and the Engineer or the Contractor may require the failed Tests, and Tests on Completion on any related work, to be repeated under the same terms and conditions.

9.4 Failure to Pass Tests on Completion

9.4.1 If the Works, or a Section, fail to pass the Tests on Completion repeated under Sub-Clause 9.3 [Retesting], the Engineer shall be entitled to:

9.4.1.1 Order further repetition of Tests on Completion under Sub-Clause 9.3;

9.4.1.2 If the failure deprives the Procuring Entity of substantially the whole benefit of the Works or Section, reject the Works or Section (as the case may be), in which event the Procuring Entity shall have the same remedies as are provided in sub-paragraph (c) of Sub-Clause 11.4 [Failure to Remedy Defects]; or

9.4.1.3 Issue a Taking-Over Certificate, if the Procuring Entity so requests.

9.4.2 In the event of sub-paragraph (c), the Contractor shall proceed in accordance with all other obligations under the Contract, and the Contract Price shall be reduced by such amount as shall be appropriate to cover the reduced value to the Procuring Entity as a result of this failure. Unless the relevant reduction

for this failure is stated (or its method of calculation is defined) in the Contract, the Procuring Entity may require the reduction to be

(i) agreed by both Parties (in full satisfaction of this failure only) and paid before this Taking-Over Certificate is issued, or

(ii) determined and paid under Sub-Clause 2.5 [Procuring Entity's Claims] and Sub-Clause 3.5 [Determinations].

10. PROCURING ENTITY'S TAKING OVER

10.1 Taking Over of the Works and Sections

10.1.1 Except as stated in Sub-Clause 9.4 [Failure to Pass Tests on Completion], the Works shall be taken over by the Procuring Entity when (i) the Works have been completed in accordance with the Contract, including the matters described in Sub-Clause 8.2 [Time for Completion] and except as allowed in sub-paragraph (a) below, and (ii) a Taking-Over Certificate for the Works has been issued, or is deemed to have been issued in accordance with this Sub-Clause.

10.1.2 The Contract or may apply by notice to the Engineer for a Taking-Over Certificate not earlier than 14 days before the Works will, in the Contractor's opinion, be complete and ready for taking over. If the Works are divided into Sections, the Contract or may similarly apply for a Taking-Over Certificate for each Section.

10.1.3 The Engineer shall, within 30 days after receiving the Contractor's application:

10.1.3.1 issue the Taking-Over Certificate to the Contractor, stating the date on which the Works or Section were completed in accordance with the Contract, except for any minor outstanding work and defects which will not substantially affect the use of the Works or Section for their intended purpose (either until or whilst this work is completed and these defects are remedied); or

10.1.3.2 reject the application, giving reasons and specifying the work required to be done by the Contractor to enable the Taking-Over Certificate to be issued. The Contractor shall then complete this work before issuing a further notice under this Sub-Clause.

10.1.4 If the Engineer fails either to issue the Taking-Over Certificate or to reject the Contractor's application within the period of 30 days, and if the Works or Section (as the case may be) are substantially in accordance with the Contract, the Taking-Over Certificate shall be deemed to have been issued on the last day of that period.

10.2 Taking Over of Parts of the Works

10.2.1 The Engineer may, at the sole discretion of the Procuring Entity, issue a Taking-Over Certificate for any part of the Permanent Works.

The Procuring Entity shall not use any part of the Works (other than as a temporary measure which is either specified in the Contract or agreed by both Parties) unless and until the Engineer has issued a Taking-Over Certificate for this part. However, if the Procuring Entity does use any part of the Works before the Taking-Over Certificate is issued:

10.2.1.1 The part which is used shall be deemed to have been taken over as from the date on which it is used,

10.2.1.2 The Contractor shall cease to be liable for the care of such part as from this date, when responsibility shall pass to the Procuring Entity, and

10.2.1.3 If requested by the Contractor, the Engineer shall issue a Taking-Over Certificate for this part.

10.2.2 After the Engineer has issued a Taking-Over Certificate for a part of the Works, the Contractor shall be given the earliest opportunity to take such steps as may be necessary to carry out any outstanding Tests on Completion. The Contractor shall carry out these Tests on Completion as soon as practicable before the expiry date of the relevant Defects Notification Period.

10.2.3 If the Contractor incurs Cost as a result of the Procuring Entity taking over and/or using a part of the Works, other than such use as is specified in the Contractor agreed by the Contractor, the Contractor shall (i) give notice to the Engineer and (ii) be entitled subject to Sub-Clause 20.1 [Contractor's Claims] to payment of any such Cost-plus profit, which shall be included in the Contract Price. After receiving this notice, the Engineer shall proceed in accordance with Sub-Clause 3.5 [Determinations] to agree or determine this Cost and profit.

10.2.4 If a Taking-Over Certificate has been issued for a part of the Works (other than a Section), the delay damages there after for completion of the remainder of the Works shall be reduced. Similarly, the delay damages for the remainder of the Section (if any) in which this part is included shall also be reduced. For any period of delay after the date stated in this Taking-Over Certificate, the proportional reduction in these delay damages shall be calculated as the proportion which the value of the part so certified bears to the value of the Works or Section (as the case may be) as a whole. The Engineer shall proceed in accordance with Sub-Clause 3.5 [Determinations] to agree or determine these proportions. The provisions of this paragraph shall only apply to the daily rate of delay damages under Sub-Clause 8.7 [Delay Damages] and shall not affect the maximum amount of these damages.

10.3 Interference with Tests on Completion

10.3.1 If the Contractor is prevented, for more than 14 days, from carrying out the Tests on Completion by a cause for which the Procuring Entity is responsible, the Procuring Entity shall be deemed to have taken over the Works or Section (as the case may be) on the date when the Tests on Completion would otherwise have been completed.

The Engineer shall then issue a Taking-Over Certificate accordingly, and the Contractor shall carry out the Tests on Completion as soon as practicable, before the expiry date of the Defects Notification Period. The Engineer shall require the Tests on Completion to be carried out by giving 14 days' notice and in accordance with the relevant provisions of the Contract.

10.3.2 If the Contractor suffers delay and/or incurs Cost as a result of this delay in carrying out the Tests on Completion, the Contractor shall give notice to the Engineer and shall be entitled subject to Sub-Clause 20.1 [Contractor's Claims] to:

10.3.2.1 An extension of time for any such delay, if completion is or will be delayed, under Sub-Clause 8.4 [Extension of Time for Completion], and

10.3.2.2 Payment of any such Cost-plus profit, which shall be included in the Contract Price.

10.3.3 After receiving this notice, the Engineer shall proceed in accordance with Sub-Clause 3.5 [Determinations] to agree or determine these matters.

10.4 Surfaces Requiring Reinstatement

Except as otherwise stated in a Taking-Over Certificate, a certificate for a Section or part of the Works shall not be deemed to certify completion of any ground or other surfaces requiring reinstatement.

11. DEFECTS LIABILITY

11.1 Completion of Outstanding Work and Remedying Defects

11.1.1 In order that the Works and Contractor's Documents, and each Section, shall be in the condition required by the Contract (fair wear and tear excepted) by the expiry date of the relevant Defects Notification Period or as soon as practicable thereafter, the Contractor shall:

a) complete any work which is outstanding on the date stated in a Taking-Over Certificate, within such reasonable time as is instructed by the Engineer, and

b) execute all work required to remedy defects or damage, as may be notified by (or on behalf of) the Procuring Entity on or before the expiry date of the Defects Notification Period for the Works or Section (as the case may be).

11.1.2 If a defect appears or damage occurs, the Contractor shall be notified accordingly, by (or on behalf of) the Procuring Entity.

11.2 Cost of Remedying Defects

11.2.1 All work referred to in sub-paragraph (b) of Sub-Clause 11.1 [Completion of Outstanding Work and Remedying Defects] shall be executed at the risk and cost of the Contractor, if and to the extent that the work is attributable to:

11.2.1.1 Any design for which the Contractor is responsible,

11.2.1.2 Plant, Materials or workmanship not being in accordance with the Contract, or

11.2.1.3 Failure by the Contractor to comply with any other obligation.

11.2.2 If and to the extent that such work is attributable to any other cause, the Contractor shall be notified promptly by (or on behalf of) the Procuring Entity, and Sub-Clause 13.3 [Variation Procedure] shall apply.

11.3 Extension of Defects Notification Period

11.3.1 The Procuring Entity shall be entitled subject to Sub-Clause 2.5 [Procuring Entity's Claims] to an extension of the Defects Notification Period for the Works or a Section if and to the extent that the Works, Section

or a major item of Plant (as the case may be, and after taking over) cannot be used for the purposes for which they are intended by reason of a defect or by reason of damage attributable to the Contractor. However, a Defects Notification Period shall not be extended by more than two years.

11.3.2 If delivery and/or erection of Plant and/or Materials was suspended under Sub-Clause 8.8 [Suspension of Work] or Sub-Clause 16.1 [Contractor's Entitlement to Suspend Work], the Contractor's obligations under this Clause shall not apply to any defects or damage occurring more than two years after the Defects Notification Period for the Plant and/or Materials would otherwise have expired.

11.4 Failure to Remedy Defects

11.4.1 If the Contractor fails to remedy any defector damage within a reasonable time, a date may be fixed by (or on behalf of) the Procuring Entity, on or by which the defect or damage is to be remedied. The Contractor shall be given reasonable notice of this date.

11.4.2 If the Contractor fails to remedy the defect or damage by this notified date and this remedial work was to be executed at the cost of the Contractor under Sub-Clause 11.2 [Cost of Remedying Defects], the Procuring Entity may (at his option):

11.4.2.1 Carry out the work itself or by others, in a reasonable manner and at the Contractor's cost, but the Contractor shall have no responsibility for this work; and the Contractor shall subject to Sub-Clause 2.5 [Procuring Entity's Claims] pay to the Procuring Entity the costs reasonably incurred by the Procuring Entity in remedying the defect or damage;

11.4.2.2 Require the Engineer to agree or determine a reasonable reduction in the Contract Price in accordance with Sub-Clause3.5 [Determinations]; or

11.4.2.3 If the defect or damage deprives the Procuring Entity of substantially the whole benefit of the Works or any major part of the Works, terminate the Contract as a whole, or in respect of such major part which cannot be put to the intended use.

11.4.3 Without prejudice to any other rights, under the Contractor otherwise, the Procuring Entity shall then be entitled to recover all sums paid for the Works or for such part (as the case may be), plus financing costs and the cost of dismantling the same, clearing the Site and returning Plant and Materials to the Contractor.

11.5 Removal of Defective Work

If the defect or damage cannot be remedied expeditiously on the Site and the Procuring Entity gives consent, the Contractor may remove from the Site for the purposes of repair such items of Plant as are defective or damaged. This consent may require the Contractor to increase the amount of the Performance Security by the full replacement cost of these items, or to provide other appropriate security.

11.6 Further Tests

11.6.1 If the work of remedying of any defect or damage may affect the performance of the Works, the Engineer may require the repetition of any of the tests described in the Contract. The requirement shall be made by notice within 30 days after the defect or damage is remedied.

11.6.2 These tests shall be carried out in accordance with the terms applicable to the previous tests, except that hey shall be carried out at the risk and cost of the Party liable, under Sub-Clause 11.2 [Cost of Remedying Defects], for the cost of the remedial work.

11.7 Right of Access

Until the Performance Certificate has been issued, the Contractor shall have such right of access to the Works as is reasonably required in order to comply with this Clause, except as may be inconsistent with the Procuring Entity's reasonable security restrictions.

11.8 Contractor to Search

The Contractor shall, if required by the Engineer, search for the cause of any defect, under the direction of the Engineer. Unless the defect is to be remedied at the cost of the Contractor under Sub-Clause 11.2 [Cost of Remedying Defects], the Cost of the search plus profit shall be agreed or determined by the Engineer in accordance with Sub-Clause 3.5 [Determinations] and shall be included in the Contract Price.

11.9 Completion Certificate

11.9.1 Performance of the Contractor's obligations shall not be considered to have been completed until the Engineer has issued the Performance Certificate to the Contractor, stating the date on which the Contractor completed his obligations under the Contract.

11.9.2 The Engineer shall issue the Performance Certificate within 30 days after the latest of the expiry dates of the Defects Notification Periods, or as soon thereafter as the Contractor has supplied all the Contractor's Documents and completed and tested all the Works, including remedying any defects. A copy of the Performance Certificate shall be issued to the Procuring Entity.

11.9.3 Only the Performance Certificate shall be deemed to constitute acceptance of the Works.

11.10 Unfulfilled Obligations

After the Performance Certificate has been issued, each Party shall remain liable for the fulfilment of any obligation which remains unperformed at that time. For the purposes of determining the nature and extent of unperformed obligations, the Contract shall be deemed to remain in force.

11.11 Clearance of Site

11.11.1 Upon receiving the Performance Certificate, the Contractor shall remove any remaining Contractor's Equipment, surplus material, wreckage, rubbish and Temporary Works from the Site.

11.11.2 If all these items have not been removed within 30 days after receipt by the Contractor of the Performance Certificate, the Procuring Entity may sell or otherwise dispose of any remaining items. The Procuring Entity shall be entitled to be paid the costs incurred in connection with, or attributable to, such sale or disposal and restoring the Site.

Any balance of the moneys from the sale shall be paid to the Contractor. If these moneys are less than the Procuring Entity's costs, the Contractor shall pay the outstanding balance to the Procuring Entity.

12. MEASUREMENT AND EVALUATION

12.1 Works to be Measured

12.1.1 The Works shall be measured, and valued for payment, in accordance with this Clause. The Contractor shall show in each application under Sub-Clauses 14.3 [Application for Interim Payment Certificates], 14.10 [Statement on Completion] and 14.11 [Application for Final Payment Certificate] the quantities and other particulars detailing the amounts which he considers to be entitled under the Contract.

12.1.2 Whenever the Engineer requires any part of the Works to be measured, reasonable notice shall be given to the Contractor's Representative, who shall:

12.1.2.1 promptly either attend or send another qualified representative to assist the Engineer in making the measurement, and

(b) supply any particulars requested by the Engineer.

If the Contractor fails to attend or send a representative, the measurement made by (or on behalf of) the Engineer shall be accepted as accurate.

12.1.3 Except as otherwise stated in the Contract, wherever any Permanent Works are to be measured from records, these shall be prepared by the Engineer. The Contractor shall, as and when requested, attend to examine and agree the records with the Engineer, and shall sign the same when agreed. If the Contractor does not attend, the records shall be accepted as accurate.

12.1.4 If the Contractor examines and disagrees the records, and/or does not sign them as agreed, then the Contractor shall give notice to the Engineer of the respects in which the records are asserted to be inaccurate. After receiving this notice, the Engineer shall review the records and either confirm or vary them and certify the payment of the undisputed part. If the Contractor does not so give notice to the Engineer within 14 days after being requested to examine the records, they shall be accepted as accurate.

12.2 Method of Measurement

Except as otherwise stated in the Contract and notwithstanding local practice:

a) Measurement shall be made of the net actual quantity of each item of the Permanent Works, and

b) The method of measurement shall be in accordance with the Bills of Quantities or other

applicable Schedules.

12.3 Evaluation

12.3.1 Except as otherwise stated in the Contract, the Engineer shall proceed in accordance with Sub-Clause
3.5 [Determinations] to agree or determine the Contract Price by evaluating each item of work, applying the measurement agreed or determined in accordance with the above Sub-Clauses 12.1 and 12.2 and the appropriate rate or price for the item.

For each item of work, the appropriate rate or price for the item shall be the rate or price specified for such item in the Contractor, if there is no such item, specified for similar work.

12.3.2 Any item of work included in the Bills of Quantities for which no rate or price was specified shall be considered as included in other rates and prices in the Bills of Quantities and will not be paid for separately.

However, a new rate or price shall be appropriate for an item of work if:

12.3.2.1 I) the measured quantity of the item is changed by more than 25% from the quantity of this item in the Bills of Quantities or another Schedule,

12.3.2.1.1.1 This change in quantity multiplied by such specified rate fo rthis item exceeds 0.25% of the Accepted Contract Amount,

12.3.2.1.1.2 This change in quantity directly changes the Cost per unit quantity of this item by more than 1%, and

12.3.2.1.1.3 This item is not specified in the Contract as a "fixed rate item"; or

12.3.2.2 i) the work is instructed under Clause 13 [Variations and Adjustments],

ii) no rate or price is specified in the Contract for this item, and

iii) no specified rate or price is appropriate because the item of work is not of similar character, or is not executed under similar conditions, as any item in the Contract.

12.3.3 Each new rate or price shall be derived from any relevant rates or prices in the Contract, with reasonable adjustments to take account of the matters described in sub-paragraph (a) and/or (b), as applicable. If no rates or prices are relevant for the derivation of a new rate or price, it shall be derived from the reasonable Cost of executing the work, together with profit, taking account of any other relevant matters.

12.3.4 Until such time as an appropriate rate or price is agreed or determined, the Engineer shall determine a provisional rate or price for the purposes of Interim Payment Certificates as soon as the concerned work commences.

12.3.5 Where the contract price is different from the corrected tender price, in order to ensure the contractor is not paid less or more relative to the contract price (*which would be the tender price*), payment valuation certificates and variation orders on omissions and additions valued based on rates in the Bill of Quantities or schedule of rates in the Tender, will be adjusted by a plus or minus percentage. The percentage already worked out during tender evaluation is worked out as follows: *(corrected tender price–tender price)/tender price X 100*.

12.4 Omissions

Whenever the omission of any work forms part (or all) of a Variation, the value of which has not been agreed, if:

a) the Contractor will incur (or has incurred) cost which, if the work had not been omitted, would have been deemed to be covered by a sum forming part of the Accepted Contract Amount;

b) the omission of the work will result (or has resulted) in this sum not forming part of the Contract Price; and

c) this cost is not deemed to be included in the evaluation of any substituted work; then the Contractor shall give notice to the Engineer accordingly, with supporting particulars. Upon receiving this notice, the Engineer shall proceed in accordance with Sub-Clause 3.5

[Determinations] to agree or determine this cost, which shall be included in the Contract Price.

13. VARIATIONS AND ADJUSTMENTS

13.1 Right to Vary

13.1.1 Variations may be initiated by the Engineer at any time prior to issuing the Taking-Over Certificate for the Works, either by an instruction or by a request for the Contractor to submit a proposal.

13.1.2 The Contractor shall execute and be bound by each Variation, unless the Contractor promptly gives notice to the Engineer stating (with supporting particulars) that (i) the Contractor cannot readily obtain the Goods required for the Variation, or (ii) such Variation triggers a substantial change in the sequence or progress of the Works. Upon receiving this notice, the Engineer shall cancel, confirm or vary the instruction.

Each Variation may include:

13.1.2.1 Changes to the quantities of any item of work included in the Contract (however, such changes do not necessarily constitute a Variation),

13.1.2.2 Changes to the quality and other characteristics of any item of work,

13.1.2.3 Changes to the levels, positions and/or dimensions of any part of the Works,

13.1.2.4 Omission of any work unless it is to be carried out by others,

13.1.2.5 Any additional work, Plant, Materials or services necessary for the Permanent Works, including any associated Tests on Completion, boreholes and other testing and exploratory work, or

13.1.2.6 Changes to the sequence or timing of the execution of the Works.

13.1.3 The Contractor shall not make any alteration and/or modification of the Permanent Works, unless and until the Engineer instructs or approves a Variation.

13.2 Value Engineering

13.2.1 The Contract or may, at any time, submit to the Engineer a written proposal which (in the Contractor's opinion) will, if adopted, (i) accelerate completion, (ii) reduce the cost to the Procuring Entity of executing, maintaining or operating the Works, (iii) improve the efficiency or value to the Procuring Entity of the completed Works, or (iv) otherwise be of benefit to the Procuring Entity.

13.2.2 The proposal shall be prepared at the cost of the Contract or and shall include the items listed in Sub- Clause 13.3 [Variation Procedure].

If a proposal, which is approved by the Engineer, includes a change in the design of part of the Permanent Works, then unless otherwise agreed by both Parties:

13.2.2.1 The Contractor shall design this part,

13.2.2.2 Sub-paragraphs (a) to (d) of Sub-Clause 4.1 [Contractor's General Obligations] shall apply, and

13.2.2.3 If this change results in a reduction in the contract value of this part, the Engineer shall proceed in accordance with Sub-Clause 3.5 [Determinations] to agree or determine a fee, which shall be included in the Contract Price. This fee shall be half (50%) of the difference between the following amounts:

13.2.2.3.1 such reduction in contract value, resulting from the change, excluding adjustments under Sub-Clause 13.7 [Adjustments for Changes in Legislation] and Sub-Clause 13.8 [Adjustments for Changes in Cost], and

13.2.2.3.2 the reduction (if any) in the value to the Procuring Entity of the varied works, taking account of any reductions in quality, anticipated life or operational efficiencies.

13.2.3 However, if amount (i) is less than amount (ii), there shall not be a fee.

13.3 Variation Procedure

13.3.1 If the Engineer requests a proposal, prior to instructing a Variation, the Contractor shall respond in writing as soon as practicable, either by giving reasons why he cannot comply (if this is the case) or by submitting:

13.3.1.1 a description of the proposed work to be performed and a programme for its execution,

13.3.1.2 the Contractor's proposal for any necessary modifications to the programme according to Sub-Clause 8.3 [Programme] and to the Time for Completion, and

13.3.1.3 the Contractor's proposal for evaluation of the Variation.

13.3.2 The Engineer shall, as soon as practicable after receiving such proposal (under Sub-Clause 13.2 [Value Engineering] or otherwise), respond with approval, disapproval or comments. The Contractor shall not delay any work whilst awaiting a response.

13.3.3 Each instruction to execute a Variation, with any requirements for the recording of Costs, shall be issued by the Engineer to the Contractor, who shall acknowledge receipt.

Each Variation shall be evaluated in accordance with Clause 12 [Measurement and Evaluation], unless the Engineer instructs or approves otherwise in accordance with this Clause.

13.4 Payment in Applicable Currencies

If the Contract provides for payment of the Contract Price in more than one currency, then whenever an adjustment is agreed, approved or determined as stated above, the amount payable in each of the applicable currencies shall be specified. For this purpose, reference shall be made to the actual or expected currency proportions of the Cost of the varied work, and to the proportions of various currencies specified for payment of the Contract Price.

13.5 Provisional Sums

13.5.1 Each Provisional Sum shall only be used, in whole or in part, in accordance with the Engineer's instructions, and the Contract Price shall be adjusted accordingly. The total sum paid to the Contractor shall include only such amounts, for the work, supplies or services to which the Provisional Sum relates, as the Engineer shall have instructed. For each Provisional Sum, the Engineer may instruct:

13.5.1.1 Work to be executed (including Plant, Materials or services to be supplied) by the Contractor and valued under Sub-Clause 13.3 [Variation Procedure]; and/or

13.5.1.2 Plant, Materials or services to be purchased by the Contractor, from a nominated Subcontractor (as defined in Clause 5 [Nominated Subcontractors]) or otherwise; and for which there shall be included in the Contract Price:

13.5.1.2.1 The actual amounts paid (or due to be paid) by the Contractor, and

13.5.1.2.2 A sum for overhead charges and profit, calculated as a percentage of these actual amounts by applying the relevant percentage rate (if any) stated in the appropriate Schedule.

13.5.1.2.3 If there is no such rate, the percentage rate stated in the **SCC** shall be applied.

13.5.2 The Contractor shall, when required by the Engineer, produce quotations, invoices, vouchers and accounts or receipts in substantiation.

13.6 Daywork

13.6.1 For work of a minor or incidental nature, the Engineer may instruct that a Variation shall be executed on a daywork basis. The work shall then be valued in accordance with the Daywork Schedule included in the Contract, and the following procedure shall apply. If a Daywork Schedule is not included in the Contract, this Sub- Clause shall not apply.

Before ordering Goods for the work, the Contractor shall submit quotations to the Engineer.

When applying for payment, the Contractor shall submit invoices, vouchers and accounts or receipts for any Goods.

13.6.2 Except for any items for which the Daywork Schedule specifies that payment is not due, the Contractor shall deliver each day to the Engineer accurate statements in duplicate which shall include the following details of the resources used in executing the previous day's work:

13.6.2.1 The names, occupations and time of Contractor's Personnel,

13.6.2.2 The identification, type and time of Contractor's Equipment and Temporary Works, and

13.6.2.3 The quantities and types of Plant and Materials used.

13.6.3 One copy of each statement will, if correct, or when agreed, be signed by the Engineer and returned to the Contractor. The Contractor shall then submit priced statements of these resources to the Engineer, prior to their inclusion in the next Statement under Sub-Clause 14.3 [Application for Interim Payment Certificates].

13.7 Adjustments for Changes in Legislation

13.7.1 The Contract Price shall be adjusted to take account of any increase or decrease in Cost resulting from a change in the Laws of the Country (including the introduction of new Laws and the repeal or modification of existing Laws) or in the judicial or official governmental interpretation of such Laws, made after the Base Date, which affect the Contractor in the performance of obligations under the Contract.

13.7.2 If the Contract or suffers (or will suffer) delay and/or incurs (or will incur) additional Cost as a result of these changes in the Laws or in such interpretations, made after the Base Date, the Contractor shall give notice to the Engineer and shall be entitled subject to Sub-Clause 20.1 [Contractor's Claims] to:

13.7.2.1 An extension of time for any such delay, if completion is or will be delayed, under Sub-Clause 8.4 [Extension of Time for Completion], and

13.7.2.2 Payment of any such Cost, which shall be included in the Contract Price.

After receiving this notice, the Engineer shall proceed in accordance with Sub-Clause 3.5 [Determinations] to agree or determine these matters.

13.7.3 Notwithstanding the foregoing, the Contractor shall not be entitled to an extension of time if the relevant delay has already been taken into account in the determination of a previous extension of time and such Cost shall not be separately paid if the same shall already have been taken into account in the indexing of any inputs to the table of adjustment data in accordance with the provisions of Sub-Clause
13.8 [Adjustments for Changes in Cost].

13.8 Adjustments for Changes in Cost

13.8.1 In this Sub-Clause, “table of adjustment data” means the completed table of adjustment data for local and foreign currencies included in the Schedules. If there is no such table of adjustment data, this Sub- Clause shall not apply.

13.8.2 If this Sub-Clause applies, the amounts payable to the Contractor shall be adjusted for rises or falls in the cost of labor, Goods and other inputs to the Works, by the addition or deduction of the amounts determined by the formulae prescribed in this Sub-Clause. To the extent that full compensation for any rise or fall in Costs is not covered by the provisions of this or other Clauses, the Accepted Contract Amount shall be deemed to have included amounts to cover the contingency of other rises and falls in costs.

13.8.3 The adjustment to be applied to the amount otherwise payable to the Contractor, as valued in accordance with the appropriate Schedule and certified in Payment Certificates, shall be determined from formulae for each of the currencies in which the Contract Price is payable. No adjustment is to be applied to work valued on the basis of Cost or current prices. The formulae shall be of the following general type:

Pn = a + b Ln/ Lo + c En/Eo + d Mn/Mo + ... where:

"Pn" is the adjustment multiplier to be applied to the estimated contract value in the relevant currency of the work carried out in period "n", this period being a month unless otherwise stated in the SCC;

"a" is a fixed coefficient, stated in the relevant table of adjustment data, representing the non-adjustable portion in contractual payments.

"b", "c", "d", … are coefficients representing the estimated proportion of each cost element related to the execution of the Works, as stated in the relevant table of adjustment data; such tabulated cost elements may be indicative of resources such as labor, equipment and materials.

"Ln", "En", "Mn", … are the current cost indices or reference prices for period "n", expressed in the relevant currency of payment, each of which is applicable to the relevant tabulated cost element on the date 49 days prior to the last day of the period (to which the Payment Certificate relates); and

"Lo", "Eo", "Mo" … are the base cost indices or reference prices, expressed in the relevant currency of payment, each of which is applicable to the relevant tabulated cost element on the Base Date.

13.8.4 The cost indices or reference prices stated in the table of adjustment data shall be used. If their source is in doubt, it shall be determined by the Engineer. For this purpose, reference shall be made to the values of the indices at stated dates (quoted in the fourth and fifth columns respectively of the table) for the purposes of clarification of the source; although these dates (and thus these values) may not correspond to the base cost indices.

13.8.5 In cases where the "currency of index" is not the relevant currency of payment, each index shall be converted into the relevant currency of payment at the selling rate, established by the central Procuring Entity of the Country, of this relevant currency on the above date for which the index is required to be applicable.

13.8.6 Until such time as each current cost index is available, the Engineer shall determine a provisional index for the issue of Interim Payment Certificates. When a current cost index is available, the adjustment shall be recalculated accordingly.

13.8.7 If the Contractor fails to complete the Works within the Time for Completion, adjustment of prices thereafter shall be made using either (i) each index or price applicable on the date 49 days prior to the expiry of the Time for Completion of the Works, or (ii) the current index or price, whichever is more favorable to the Procuring Entity.

13.8.8 The weightings (coefficients) for each of the factors of cost stated in the table(s) of adjustment data shall only be adjusted if they have been rendered unreasonable, unbalanced or inapplicable, as a result of Variations.

14. CONTRACT PRICE AND PAYMENT

14.1 The Contract Price

14.1.1 Unless otherwise stated in the Particular Conditions:

14.1.1.1 the Contract Price shall be agreed or determined under Sub-Clause 12.3 [Evaluation] and be subject to adjustments in accordance with the Contract;

14.1.1.2 the Contractor shall pay all taxes, duties and fees required to be paid by him under the Contract, and the Contract Price shall not be adjusted for any of these costs except as stated in Sub-Clause 13.7 [Adjustments for Changes in Legislation];

14.1.1.3 any quantities which may be set out in the Bills of Quantities or other Schedule are estimated quantities and are not to be taken as the actual and correct quantities:

14.1.1.3.1 of the Works which the Contractor is required to execute, or

14.1.1.3.2 for the purposes of Clause 12 [Measurement and Evaluation]; and

14.1.1.4 the Contractor shall submit to the Engineer, within 30 days after the Commencement Date, a proposed breakdown of each lumpsum price in the Schedules.

14.1.2 The Engineer may take account of the breakdown when preparing Payment Certificates, but shall not be bound by it.

14.1.3 Not withstanding the provisions of subparagraph (b), Contractor's Equipment, including essential spare parts there for, imported by the Contractor for the sole purpose of executing the Contract shall be exempt from the payment of import duties and taxes upon importation.

14.2 Advance Payment

14.2.1 The Procuring Entity shall make an advance payment, as an interest- free loan for mobilization and cashflow support, when the Contractor submits a guarantee in accordance with this Sub-Clause. The total advance payment, the number and timing of instalments (if more than one), and the applicable currencies and proportions, shall be as stated in the **SCC**. Unless and until the Procuring Entity receives this guarantee, or if the total advance payment is not stated in the **SCC**, this Sub-Clause shall not apply.

14.2.2 The Engineer shall deliver to the Procuring Entity and to the Contractor an Interim Payment Certificate for the advance payment or its first instalment after receiving a Statement (under Sub-Clause 14.3 [Application for Interim Payment Certificates]) and after the Procuring Entity receives (i) the Performance Security in accordance with Sub-Clause 4.2 [Performance Security] and (ii) a guarantee in amounts and currencies equal to the advance payment. This guarantee shall be issued by a reputable Procuring Entity or financial institution selected by the Contractor and shall be in the form annexed to the Particular Conditions or in another form approved by the Procuring Entity.

14.2.3 The Contractor shall ensure that the guarantee is valid and enforceable until the advance payment has been repaid, but its amount shall be progressively reduced by the amount repaid by the Contractor as indicated in the Payment Certificates. If the terms of the guarantee specify its expiry date, and the advance payment has not been repaid by the date 30 days prior to the expiry date, the Contractor shall extend the validity of the guarantee until the advance payment has been repaid.

14.2.4 Unless stated otherwise in the SCC, the advance payment shall be repaid through percentage deductions from the interim payments determined by the Engineer in accordance with Sub-Clause 14.6 [Issue of Interim Payment Certificates], as follows:

14.2.4.1 Deductions shall commence in the next interim Payment Certificate following that in which the total of all certified interim payments (excluding the advance payment and deductions and repayments of retention) exceeds 30 percent (30%) of the Accepted Contract Amount less Provisional Sums; and

14.2.4.2 Deductions shall be made at the amortization rate stated in the **SCC** of the amount of each Interim Payment Certificate (excluding the advance payment and deductions for its repayments as well as deductions for retention money) in the currencies and proportions of the advance payment until such time as the advance payment has been repaid; provided that the advance payment shall be completely repaid prior to the time when 90 percent (90%) of the Accepted Contract Amount less Provisional Sums has been certified for payment.

14.2.5 If the advance payment has not been repaid prior to the issue of the Taking-Over Certificate for the Works or prior to termination under Clause 15 [Termination by Procuring Entity], Clause 16 [Suspension and Termination by Contractor] or Clause 19 [Force Majeure] (as the case may be), the whole of the balance then outstanding shall immediately become due and in case of termination under Clause 15 [Termination by Procuring Entity], except for Sub-Clause 15.5 [Procuring Entity's Entitlement to Termination for Convenience], payable by the Contractor to the Procuring Entity.

14.3 Application for Interim Payment Certificates

14.3.1 The Contractor shall submit a Statement in six copies to the Engineer after the end of each month, in aform approved by the Engineer, showing in detail the amounts to which the Contractor considers itself to been titled, together with supporting documents which shall include the report on the progress during this month in accordance with Sub-Clause 4.21 [Progress Reports].

14.3.2 The Statement shall include the following items, as applicable, which shall be expressed in the various currencies in which the Contract Price is payable, in the sequence listed:

14.3.2.1 the estimated contract value of the Works executed and the Contractor's Documents produced up to the end of the month (including Variations but excluding items described in sub-paragraphs (b) to (g) below);

14.3.2.2 any amounts to be added and deducted for changes in legislation and changes in cost, in accordance with Sub-Clause 13.7 [Adjustments for Changes in Legislation] and Sub-Clause 13.8 [Adjustments for Changes in Cost];

14.3.2.3 any amount to be deducted for retention, calculated by applying the percentage of retention stated in the **SCC** to the total of the above amounts, until the amount so retained by the Procuring Entity reaches the limit of Retention Money (if any) stated in the **SCC**;

14.3.2.4 any amounts to be added for the advance payment and (if more than one instalment) and to be deducted for its repayments in accordance with Sub-Clause 14.2 [Advance Payment];

14.3.2.5 any amounts to be added and deducted for Plant and Materials in accordance with Sub-

Clause14.5[Plant and Materials intended for the Works];

14.3.2.6 any other additions or deductions which may have become due under the Contract or otherwise, including those under Clause 20 [Claims, Disputes and Arbitration]; and

14.3.2.7 the deduction of amounts certified in all previous Payment Certificates.

14.3.3 Where the contract price is different from the corrected tender price, in order to ensure the contractor is not paid less or more relative to the contract price (*which would be the tender price*), payment valuation certificates and variation orders on omissions and additions valued based on rates in the Bill of Quantities or schedule of rates in the Tender, will be adjusted by a plus or minus percentage. The percentage already worked out during tender evaluation is worked out as follows: *(corrected tender price–tender price)/tender priceX100.*

14.4 Schedule of Payments

14.4.1 If the Contract includes a schedule of payments specifying the instalments in which the Contract Price will be paid, then unless otherwise stated in this schedule:

14.4.1.1 The instalments quoted in this schedule of payments shall be the estimated contract values for the purposes of sub-paragraph (a) of Sub-Clause 14.3 [Application for Interim Payment Certificates];

14.4.1.2 Sub-Clause14.5[Plant and Materials intended for the Works] shall not apply; and

14.4.1.3 If these instalments are not defined by reference to the actual progress achieved in executing the Works, and if actual progress is found to be less or more than that on which this schedule of payments was based, then the Engineer may proceed in accordance with Sub-Clause 3.5 [Determinations] to agree or determine revised instalments, which shall take account of the extent to which progress is less or more than that on which the instalments were previously based.

14.4.2 If the Contract does not include a schedule of payments, the Contractor shall submit non-binding estimates of the payments which he expects to become due during each quarterly period. The first estimate shall be submitted within 42 days after the Commencement Date. Revised estimates shall be submitted at quarterly intervals, until the Taking-Over Certificate has been issued for the Works.

14.5 Plant and Materials intended for the Works *(see SCC for lists)*

14.5.1 If this Sub-Clause applies, Interim Payment Certificates shall include, under sub-paragraph (e) of Sub-Clause 14.3, (i) an amount for Plant and Materials which have been sent to the Site for incorporation in the Permanent Works, and (ii) a reduction when the contract value of such Plant and Materials is included as part of the Permanent Works under sub-paragraph (a) of Sub-Clause 14.3 [Application for Interim Payment Certificates].

14.5.2 If the lists referred to in sub-paragraphs (b) (i) or (c) (i) below are not included in the Schedules, this Sub-Clause shall not apply. The Engineer shall determine and certify each addition if the following conditions are satisfied:

14.5.2.1 The Contractor has:

14.5.2.1.1 Kept satisfactory records (including the orders, receipts, Costs and use of Plant and Materials) which are available for inspection, and

14.5.2.1.2 Submitted a statement of the Cost of acquiring and delivering the Plant and Materials to the Site, supported by satisfactory evidence; and either:

14.5.2.2 The relevant Plant and Materials:

14.5.2.2.1 Are those listed in the Schedules for payment when shipped,

14.5.2.2.2 Have been shipped to the Country, enroute to the Site, in accordance with the Contract; and

14.5.2.2.3 are described in a clean shipped bill of lading or other evidence of shipment, which has been submitted to the Engineer together with evidence of payment of freight and insurance, any other documents reasonably required, and an Procuring Entity guarantee in a form and issued by an entity approved by the Procuring Entity in amounts and currencies equal to the amount due under this Sub- Clause: this guarantee may be in a similar form to the form referred to in Sub-Clause 14.2[Advance Payment] and shall be valid until the Plant and Materials are properly stored on Site and protected against loss, damage or deterioration;

14.5.2.3 the relevant Plant and Materials:

14.5.2.3.1 are those listed in the Schedules for payment when delivered to the Site, and

14.5.2.3.2 have been delivered to and are properly stored on the Site, are protected against loss, damage or deterioration, and appear to be in accordance with the Contract.

14.5.3 The additional amount to be certified shall be the equivalent of eighty percent (80%) of the Engineer's determination of the cost of the Plant and Materials (including delivery to Site), taking account of the documents mentioned in this Sub-Clause and of the contract value of the Plant and Materials.

14.5.4 The currencies for this additional amount shall be the same as those in which payment will become due when the contract value is included under sub-paragraph (a) of Sub-Clause 14.3 [Application for Interim Payment Certificates]. At that time, the Payment Certificate shall include the applicable reduction which shall be equivalent to, and in the same currencies and proportions as, this additional amount for the relevant Plant and Materials.

14.6 Issue of Interim Payment Certificates

14.6.1 No amount will be certified or paid until the Procuring Entity has received and approved the Performance Security. Thereafter, the Engineer shall, within 30 days after receiving a Statement and supporting documents, deliver to the Procuring Entity and to the Contractor an Interim Payment Certificate which shall state the amount which the Engineer fairly determines to be due, with all supporting particulars for any reduction or withholding made

However, prior to issuing the Taking-Over Certificate for the Works, the Engineer shall not be bound to issue an Interim Payment Certificate in an amount which would (after retention and other deductions) be less than the minimum amount of Interim Payment Certificates (if any) stated in the **SCC**. In this event, the Engineer shall give notice to the Contractor accordingly.

14.6.2 An Interim Payment Certificate shall not be withheld for any other reason, although:

14.6.2.1 if anything supplied or work done by the Contractor is not in accordance with the Contract, the cost of rectification or replacement may be withheld until rectification or replacement has been completed; and/or

14.6.2.2 if the Contractor was or is failing to perform any work or obligation in accordance with the Contract, and had been so notified by the Engineer, the value of this work or obligation may be withheld until the work or obligation has been performed.

14.6.3 The Engineer may in any Payment Certificate make any correction or modification that should properly be made to any previous Payment Certificate. A Payment Certificate shall not be deemed to indicate the Engineer's acceptance, approval, consent or satisfaction.

14.7 Payment

14.7.1 The Procuring Entity shall pay to the Contractor:

14.7.1.1 The first instalment of the advance payment within 42 days after issuing the Letter of Acceptance or within 21 days after receiving the documents in accordance with Sub-Clause 4.2 [Performance Security] and Sub-Clause 14.2 [Advance Payment], whichever is later;

14.7.1.2 the amount certified in each Interim Payment Certificate within 56 days after the Engineer receives the Statement and supporting documents; or, at a time when the Procuring Entity's loan or credit (from which part of the payments to the Contractor is being made) is suspended, the amount shown on any statement submitted by the Contractor within 14 days after such statement is submitted, any discrepancy being rectified in the next payment to the Contractor; and

14.7.1.3 the amount certified in the Final Payment Certificate within 56 days after the Procuring Entity receives this Payment Certificate; or, at a time when the Procuring Entity's loan or credit (from which part of the payments to the Contractor is being made) is suspended, the undisputed amount shown in the Final Statement within 56 days after the date of notification of the suspension in accordance with Sub-Clause 16.2 [Termination by Contractor].

14.7.2 Payment of the amount due in each currency shall be made in to the Procuring Entity account, nominated by the Contractor, in the payment country (for this currency) specified in the Contract.

14.8 Delayed Payment

14.8.1 If the Contractor does not receive payment in accordance with Sub-Clause 14.7 [Payment], the Contractor shall be entitled to receive financing charges compounded monthly on the amount unpaid during the period of delay. This period shall be deemed to commence on the date for payment specified in Sub-Clause 14.7 [Payment], irrespective (in the case of its sub-paragraph (b)) of the date on which any Interim Payment Certificate is issued.

14.8.2 Unless otherwise stated in the Particular Conditions, these financing charges shall be calculated at the annual rate of three percentage points above the discount rate of the central Procuring Entity in the country of the currency of payment, or if not available, the inter-Procuring Entity offered rate, and shall

be paid in such currency.

The Contractor shall be entitled to this payment without formal notice or certification, and without prejudice to any other right or remedy.

14.9 Payment of Retention Money

14.9.1 When the Taking-Over Certificate has been issued for the Works, the first half of the Retention Money shall be certified by the Engineer for payment to the Contractor. If a Taking-Over Certificate is issued for a Section or part of the Works, a proportion of the Retention Money shall be certified and paid. This proportion shall be half (50%) of the proportion calculated by dividing the estimated contract value of the Section or part, by the estimated final Contract Price.

14.9.2 Promptly after the latest of the expiry dates of the Defects Notification Periods, the outstanding balance of the Retention Money shall be certified by the Engineer for payment to the Contractor. If a Taking-Over Certificate was issued for a Section, a proportion of the second half of the Retention Money shall be certified and paid promptly after the expiry date of the Defects Notification Period for the Section. This proportion shall be half (50%) of the proportion calculated by dividing the estimated contract value of the Section by the estimated final Contract Price.

14.9.3 However, if any work remains to be executed under Clause 11 [Defects Liability], the Engineer shall be entitled to withhold certification of the estimated cost of this work until it has been executed.

14.9.4 When calculating these proportions, no account shall be taken of any adjustments under Sub-Clause 13.7 [Adjustments for Changes in Legislation] and Sub-Clause 13.8 [Adjustments for Changes in Cost].

14.9.5 Unless otherwise stated in the Particular Conditions, when the Taking-Over Certificate has been issued for the Works and the first half of the Retention Money has been certified for payment by the Engineer, the Contractor shall be entitled to substitute a guarantee, in the form annexed to the Particular Conditions or in another form approved by the Procuring Entity and issued by a reputable Procuring Entity or financial institution selected by the Contractor, for the second half of the Retention Money. The Contractor shall ensure that the guarantee is in the amounts and currencies of the second half of the Retention Money and is valid and enforceable until the Contract or has executed and completed the Works and remedied any defects, as specified for the Performance Security in Sub-Clause 4.2. On receipt by the Procuring Entity of the required guarantee, the Engineer shall certify and the Procuring Entity shall pay the second half of the Retention Money. The release of the second half of the Retention Money against a guarantee shall then be in lieu of the release under the second paragraph of this Sub-Clause. The Procuring Entity shall return the guarantee to the Contractor within 21 days after receiving a copy of the Performance Certificate.

14.9.6 If the Performance Security required under Sub-Clause 4.2 is in the form of a demand guarantee, and the amount guaranteed under it when the Taking-Over Certificate is issued is more than half of the Retention Money, then the Retention Money guarantee will not be required. If the amount guaranteed under the Performance Security when the Taking-Over Certificate is issued is less than half of the Retention Money, the Retention Money guarantee will only be required for the difference between half of the Retention Money and the amount guaranteed under the Performance Security.

14.10 Statement at Completion

Within 84 days after receiving the Taking-Over Certificate for the Works, the Contractor shall submit tothe Engineer six copies of a Statement at completion with supporting documents, in accordance with Sub-Clause
14.3 [Application for Interim Payment Certificates], showing:

a) the value of all work done in accordance with the Contract up to the date stated in the Taking-Over Certificate for the Works,
b) any further sums which the Contractor considers to be due, and
c) an estimate of any other amounts which the Contractor considers will become due to him under the Contract. Estimated amounts shall be shown separately in this Statement at completion.

The Engineer shall then certify in accordance with Sub-Clause 14.6 [Issue of Interim Payment Certificates].

14.11 Application for Final Payment Certificate

14.11.1 Within 56 days after receiving the Performance Certificate, the Contractor shall submit, to the Engineer,

six copies of a draft final statement with supporting documents showing in detail in a form approved by the Engineer:

14.11.1.1 The value of all work done in accordance with the Contract, and

14.11.1.2 Any further sums which the Contractor considers to be due to him under the Contractor otherwise.

14.11.2 If the Engineer disagrees with or cannot verify any part of the draft final statement, the Contractor shall submit such further information as the Engineer may reasonably require within 30 days from receipt of said draft and shall make such changes in the draft as may be agreed between them. The Contractor shall then prepare and submit to the Engineer the final statement as agreed. This agreed statement is referred to in these Conditions as the "Final Statement".

14.11.3 However, if, following discussions between the Engineer and the Contractor and any changes to the draft final statement which are agreed, it becomes evident that a dispute exists, the Engineer shall deliver to the Procuring Entity (with a copy to the Contractor) an Interim Payment Certificate for the agreed parts of the draft final statement. Thereafter, if the dispute is finally resolved under Sub-Clause 20.4 [Obtaining Dispute Board's Decision] or Sub-Clause 20.5 [Amicable Settlement], the Contractor shall then prepare and submit to the Procuring Entity (with a copy to the Engineer) a Final Statement.

14.12 Discharge

When submitting the Final Statement, the Contractor shall submit a discharge which confirms that the total of the Final Statement represents full and final settlement of all moneys due to the Contractor under or in connection with the Contract. This discharge may state that it becomes effective when the Contractor has received the Performance Security and the outstanding balance of this total, in which event the discharge shall be effective on such date.

14.13 Issue of Final Payment Certificate

14.13.1 Within 30 days after receiving the Final Statement and discharge in accordance with Sub-Clause 14.11 [Application for Final Payment Certificate] and Sub-Clause 14.12 [Discharge], the Engineer shall deliver, to the Procuring Entity and to the Contractor, the Final Payment Certificate which shall state:

(a) The amount which he fairly determines is finally due, and

(b) After giving credit to the Procuring Entity for all amounts previously paid by the Procuring Entity and for all sums to which the Procuring Entity is entitled, the balance (if any) due from the Procuring Entity to the Contractor or from the Contractor to the Procuring Entity, as the case may be.

14.13.1 If the Contractor has not applied for a Final Payment Certificate in accordance with Sub-Clause 14.11 [Application for Final Payment Certificate] and Sub-Clause 14.12 [Discharge], the Engineer shall request the Contractor to do so. If the Contractor fails to submit an application within a period of 30 days, the Engineer shall issue the Final Payment Certificate for such amount as he fairly determines to be due.

14.14 Cessation of Procuring Entity's Liability

14.14.1 The Procuring Entity shall not be liable to the Contractor for any matter or thing under or in connection with the Contract or execution of the Works, except to the extent that the Contractor shall have included an amount expressly for it:

a) In the Final Statement and also

b) (Except for matters or things arising after the issue of the Taking-Over Certificate for the Works) in the Statement at completion described in Sub-Clause 14.10[Statement at Completion].

14.14.2 However, this Sub-Clause shall not limit the Procuring Entity's liability under his indemnification obligations, or the Procuring Entity's liability in any case of fraud, deliberate default or reckless misconduct by the Procuring Entity.

14.15 Currencies of Payment

The Contract Price shall be paid in the currency or currencies named in the Schedule of Payment Currencies. If more than one currency is so named, payments shall be made as follows:

a) If the Accepted Contract Amount was expressed in Local Currency only:

a) The proportions or amounts of the Local and Foreign Currencies, and the fixed rates of exchange to be used for calculating the payments, shall be as stated in the Schedule of Payment

Currencies, except as otherwise agreed by both Parties;

ii) payments and deductions under Sub-Clause 13.5 [Provisional Sums] and Sub-Clause 13.7 [Adjustments for Changes in Legislation] shall be made in the applicable currencies and proportions; and

iii) other payments and deductions under sub-paragraphs (a) to (d) of Sub-Clause 14.3 [Application for Interim Payment Certificates] shall be made in the currencies and proportions specified in sub- paragraph (a) (i) above;

b) payment of the damages specified in the **SCC**, shall be made in the currencies and proportions specified in the Schedule of Payment Currencies;

c) other payments to the Procuring Entity by the Contractor shall be made in the currency in which the sum was expended by the Procuring Entity, or in such currency as may be agreed by both Parties;

d) if any amount payable by the Contractor to the Procuring Entity in a particular currency exceeds the sum payable by the Procuring Entity to the Contractor in that currency, the Procuring Entity may recover the balance of this amount from the sums otherwise payable to the Contractor in other currencies; and

e) if no rates of exchange are stated in the Schedule of Payment Currencies, they shall be those prevailing on the Base Date and determined by the central Procuring Entity of the Country.

15. TERMINATION BY PROCURING ENTITY

15.1 Notice to Correct

If the Contractor fails to carry out any obligation under the Contract, the Engineer may by notice require the Contractor to make good the failure and to remedy it within a specified reasonable time.

15.2 Termination by Procuring Entity

15.2.1 The Procuring Entity shall be entitled to terminate the Contract if the Contractor:

15.2.1.1 fails to comply with Sub-Clause 4.2 [Performance Security] or with a notice under Sub-Clause 15.1 [Notice to Correct],

15.2.1.2 abandons the Works or otherwise plainly demonstrates the intention not to continue performance of his obligations under the Contract,

15.2.1.3 without reasonable excuse fails:

(i) to proceed with the Works in accordance with Clause 8 [Commencement, Delays and Suspension], or

ii) to comply with a notice issued under Sub-Clause 7.5 [Rejection] or Sub- Clause 7.6 [Remedial Work], within 30 days after receiving it,

15.2.1.4 subcontracts the whole of the Works or as signs the Contract without the required agreement,

15.2.1.5 becomes bankrupt or insolvent, goes into liquidation, has a receiving or administration order made against him, compounds with his creditors, or carries on business under a receiver, trustee or manager for the benefit of his creditors, or if any act is done or event occurs which (under applicable Laws) has a similar effect to any of these acts or events, or

15.2.1.6 gives or offers to give (directly or indirectly) to any person any bribe, gift, gratuity, commission or other thing of value, as an inducement or reward:

15.2.1.6.1 for doing or forbearing to do any action in relation to the Contract, or

15.2.1.6.2 for showing or for bearing to show favor or disfavor to any person in relation to the Contract, or if any of the Contractor's Personnel, agents or Subcontractors gives or offers to give (directly or indirectly) to any person any such inducement or reward as is described in this sub-paragraph (f). However, lawful inducements and rewards to Contractor's Personnel shall not entitle termination, or

15.2.1.7 based on reasonable evidence, has engaged in Fraud and Corruption as defined in paragraph 2.2 of the Appendix B to these General Conditions, in competing for or in executing the Contract.

15.2.2 In any of these events or circumstances, the Procuring Entity may, upon giving 14 days' notice to the Contractor, terminate the Contract and expel the Contractor from the Site. However, in the case of sub-paragraph (e) or (f) or (g), the Procuring Entity may by notice terminate the Contract immediately.

15.2.3 The Procuring Entity's election to terminate the Contract shall not prejudice any other rights of the Procuring Entity, under the Contract or otherwise.

The Contractor shall then leave the Site and deliver any required Goods, all Contractor's Documents, and other design documents made by or for him, to the Engineer. However, the Contractor shall use his lowest efforts to comply immediately with any reasonable instructions included in the notice (i) for the assignment of any subcontract, and (ii) for the protection of life or property or for the safety of the

Works.

After termination, the Procuring Entity may complete the Works and/or arrange for any other entities to do so. The Procuring Entity and these entities may then use any Goods, Contractor's Documents and other design documents made by or on behalf of the Contractor.

The Procuring Entity shall then give notice that the Contractor's Equipment and Temporary Works will be released to the Contractor at or near the Site. The Contractor shall promptly arrange their removal, at the risk and cost of the Contractor. However, if by this time the Contractor has failed to make a payment due to the Procuring Entity, these items may be sold by the Procuring Entity in order to recover this payment. Any balance of the proceeds shall then be paid to the Contractor.

15.3 Valuation at Date of Termination

As soon as practicable after a notice of termination under Sub-Clause 15.2 [Termination by Procuring Entity] has taken effect, the Engineer shall proceed in accordance with Sub-Clause 3.5 [Determinations] to agree or determine the value of the Works, Goods and Contractor's Documents, and any other sums due to the Contractor for work executed in accordance with the Contract.

15.4 Payment after Termination

After a notice of termination under Sub-Clause 15.2 [Termination by Procuring Entity] has taken effect, the Procuring Entity may:

a) Proceed in accordance with Sub-Clause 2.5 [Procuring Entity's Claims],

b) Withhold further payments to the Contractor until the costs of execution, completion and remedying of any defects, damages for delay in completion (if any), and all other costs incurred by the Procuring Entity, have been established, and/or

c) Recover from the Contractor any losses and damages incurred by the Procuring Entity and any extra costs of completing the Works, after allowing for any sum due to the Contractor under Sub-Clause 15.3 [Valuation at Date of Termination]. After recovering any such losses, damages and extra costs, the Procuring Entity shall pay any balance to the Contractor.

15.5 Procuring Entity's Entitlement to Termination for Convenience

15.5.1 The Procuring Entity shall be entitled to terminate the Contract, at any time for the Procuring Entity's convenience, by giving notice of such termination to the Contractor. The termination shall take effect 30 days after the later of the dates on which the Contractor receives this notice or the Procuring Entity returns the Performance Security. The Procuring Entity shall not terminate the Contract under this Sub-Clause in order to execute the Works itself or to arrange for the Works to be executed by another contractor or to avoid a termination of the Contract by the Contractor under Clause 16.2[Termination by Contractor].

15.5.2 After this termination, the Contractor shall proceed in accordance with Sub-Clause 16.3 [Cessation of Work and Removal of Contractor's Equipment] and shall be paid in accordance with Sub-Clause 16.4 [Payment on Termination].

15.6 Fraud and Corruption

The Procuring Entity requires compliance with the national law and regulations against corruption. All available sanctions will apply where corruption is detected.

16. SUSPENSION AND TERMINATION BY CONTRACTOR

16.1 Contractor's Entitlement to Suspend Work

16.1.1 If the Engineer fails to certify in accordance with Sub-Clause 14.6 [Issue of Interim Payment Certificates] or the Procuring Entity fails to comply with Sub-Clause 2.4 [Procuring Entity's Financial Arrangements] or Sub- Clause 14.7 [Payment], the Contractor may, after giving not less than 21days' notice to the Procuring Entity, suspend work (or reduce the rate of work) unless and until the Contractor has received the Payment Certificate, reasonable evidence or payment, as the case may be and as described in the notice.

16.1.2 Not withstanding the above, if the Procuring Entity has suspended disbursements under the loan or credit from which payments to the Contractor are being made, in whole or in part, for the execution of the Works, and no alternative funds are available as provided for in Sub-Clause 2.4 [Procuring Entity's

Financial Arrangements], the Contractor may by notice suspend work or reduce the rate of work at any time, but not less than 7 days after the Procuring Entity having received the suspension notification from the Procuring Entity.

16.1.3 The Contractor's action shall not prejudice his entitlements to financing charges under Sub-Clause 14.8 [Delayed Payment] and to termination under Sub-Clause 16.2[Termination by Contractor].

16.1.4 If the Contractor subsequently receives such Payment Certificate, evidence or payment (as described in the relevant Sub-Clause and in the above notice) before giving a notice of termination, the Contractor shall resume normal working as soon as is reasonably practicable.

16.1.5 If the Contractor suffers delay and/or incurs Cost as a result of suspending work (or reducing the rate of work) in accordance with this Sub-Clause, the Contractor shall give notice to the Engineer and shall be entitled subject to Sub-Clause 20.1 [Contractor's Claims] to:

16.1.5.1 an extension of time for any such delay, if completion is or will be delayed, under Sub-Clause 8.4 [Extension of Time for Completion], and

16.1.5.2 payment of any such Cost-plus profit, which shall be included in the Contract Price.

16.1.6 After receiving this notice, the Engineers shall proceed in accordance with Sub-Clause 3.5 [Determinations] to agree or determine these matters.

16.2 Termination by Contractor

16.2.1 The Contractor shall be entitled to terminate the Contract if:

16.2.1.1 the Contractor does not receive the reasonable evidence within 42 days after giving notice under Sub- Clause 16.1 [Contractor's Entitlement to Suspend Work] in respect of a failure to comply with Sub-Clause 2.4 [Procuring Entity's Financial Arrangements],

16.2.1.2 the Engineer fails, within 56 days after receiving a Statement and supporting documents, to issue the relevant Payment Certificate,

16.2.1.3 the Contractor does not receive the amount due under an Interim Payment Certificate within 42 days after the expiry of the time stated in Sub-Clause 14.7 [Payment] within which payment is to be made (except for deductions in accordance with Sub-Clause 2.5 [Procuring Entity's Claims]),

16.2.1.4 the Procuring Entity substantially fails to perform his obligations under the Contract in such manner as to materially and adversely affect the economic balance of the Contract and/or the ability of the Contractor to perform the Contract,

16.2.1.5 the Procuring Entity fails to comply with Sub-Clause 1.6 [Contract Agreement] or Sub-Clause 1.7 [Assignment],

16.2.1.6 a prolonged suspension affects the whole of the Works as described in Sub-Clause 8.11 [Prolonged Suspension], or

16.2.1.7 the Procuring Entity becomes bankrupt or insolvent, goes into liquidation, has a receiving or administration order made against him, compounds with his creditors, or carries on business under a receiver, trustee or manager for the benefit of his creditors, or if any act is done or event occurs which (under applicable Laws) has a similar effect to any of these acts or events.

16.2.1.8 The Contractor does not receive the Engineer's instruction recording the agreement of both Parties on the fulfilment of the conditions for the Commencement of Works under Sub-Clause 8.1 [Commencement of Works.

16.2.2 In any of these events or circumstances, the Contractor may, upon giving 14 days' notice to the Procuring Entity, terminate the Contract. However, in the case of sub-paragraph (f) or (g), the Contractor may by notice terminate the Contract immediately.

16.2.3 In the event the Procuring Entity suspends the loan or credit from which part or whole of the payments to the Contractor are being made, if the Contractor has not received the sums due to him upon expiration of the14 days referred to in Sub-Clause 14.7 [Payment] for payments under Interim Payment Certificates, the Contractor may, without prejudice to the Contractor's entitlement to financing charges under Sub-Clause14.8 [Delayed Payment], take one of the following actions, namely (i) suspend work or reduce the rate of work under Sub-Clause 16.1 above, or (ii) terminate the Contract by giving notice to the Procuring Entity, with a copy to the Engineer, such termination to take effect 14 days after the giving of the notice.

The Contractor's election to terminate the Contract shall not prejudice any other rights of the Contractor, under the Contract or otherwise.

16.3 Cessation of Work and Removal of Contractor's Equipment

After a notice of termination under Sub-Clause 15.5 [Procuring Entity's Entitlement to Termination for Convenience], Sub-Clause 16.2 [Termination by Contractor] or Sub-Clause 19.6 [Optional Termination, Payment and Release] has taken effect, the Contractor shall promptly:

a) Cease all further work, except for such work as may have been instructed by the Engineer for the protection of life or property or for the safety of the Works,

b) Handover Contractor's Documents, Plant, Materials and other work, for which the Contractor has received payment, and

c) Remove all other Goods from the Site, except as necessary for safety, and leave the Site.

16.4 Payment on Termination

After a notice of termination under Sub-Clause 16.2 [Termination by Contractor] has taken effect, the Procuring Entity shall promptly:

a) Return the Performance Security to the Contractor,

b) Pay the Contractor in accordance with Sub-Clause 19.6 [Optional Termination, Payment and Release], and

c) Pay to the Contractor the amount of any loss or damage sustained by the Contractor as a result of this termination.

17. RISK AND RESPONSIBILITY

17.1 Indemnities

17.1.1 The Contractor shall indemnify and hold harmless the Procuring Entity, the Procuring Entity's Personnel, and their respective agents, against and from all claims, damages, losses and expenses (including legal fees and expenses) in respect of:

(a) Bodily injury, sickness, disease or death, of any person whatsoever arising out of or in the course of or by reason of the Contractor's design (if any), the execution and completion of the Works and the remedying of any defects, unless attributable to any negligence, willful actor breach of the Contract by the Procuring Entity, the Procuring Entity's Personnel, or any of the irrespective agents, and

(b) Damage to or loss of any property, real or personal (other than the Works), to the extent that such damage or loss arises out of or in the course of or by reason of the Contractor's design (if any), the execution and completion of the Works and the remedying of any defects, unless and to the extent that any such damage or loss is attributable to any negligence, willful act or breach of the Contract by the Procuring Entity, the Procuring Entity's Personnel, the irrespective agents, or any one directly or indirectly employed by any of them.

17.1.2 The Procuring Entity shall indemnify and hold harmless the Contractor, the Contractor's Personnel, and their respective agents, against and from all claims, damages, losses and expenses (including legal fees and expenses) in respect of (1) bodily injury, sickness, disease or death, which is attributable to any negligence, willful act or breach of the Contract by the Procuring Entity, the Procuring Entity's Personnel, or any oftheir respective agents, and (2) the matters for which liability may be excluded from insurance cover, as described in sub-paragraphs (d)(i), (ii) and (iii) of Sub-Clause 18.3 [Insurance Against Injury to Persons and Damage to Property].

17.2 Contractor's Care of the Works

17.2.1 The Contractor shall take full responsibility for the care of the Works and Goods from the Commencement Date until the Taking-Over Certificate is issued (or is deemed to be issued under Sub-Clause 10.1 [Taking Over of the Works and Sections]) for the Works, when responsibility for the care of the Works shall pass to the Procuring Entity. If a Taking-Over Certificate is issued (or is so deemed to be issued) for any Section or part of the Works, responsibility for the care of the Section or part shall then pass to the Procuring Entity.

17.2.2 After responsibility has accordingly passed to the Procuring Entity, the Contractor shall take responsibility for the care of any work which is outstanding on the date stated in a Taking-Over Certificate, until this outstanding work has been completed.

17.2.3 If any loss or damage happens to the Works, Goods or Contractor's Documents during the period when the Contractor is responsible for their care, from any cause not listed in Sub-Clause 17.3 [Procuring Entity's Risks], the Contractor shall rectify the loss or damage at the Contractor's risk and cost, so that the Works, Goods and Contractor's Documents conform with the Contract.

17.2.4 The Contractor shall be liable for any loss or damage caused by any actions performed by the Contractor

after a Taking-Over Certificate has been issued. The Contractor shall also be liable for any loss or damage which occurs after a Taking-Over Certificate has been issued and which arose from a previous event for which the Contractor was liable.

17.3 Procuring Entity's Risks

The risks referred to in Sub-Clause 17.4 [Consequences of Procuring Entity's Risks] below, insofar as they directly affect the execution of the Works in the Country, are:

a) war, hostilities (whether war be declared or not), invasion, act of foreign enemies,

b) rebellion, terrorism, sabotage by persons other than the Contractor's Personnel, revolution, insurrection, military or usurped power, or civil war, within the Country,

c) riot, commotion or disorder within the Country by persons other than the Contractor's Personnel,

d) munitions of war, explosive materials, ionizing radiation or contamination by radio-activity, within the Country, except as may be attributable to the Contractor's use of such munitions, explosives, radiation or radio-activity,

e) pressure waves caused by aircraft or other aerial devices traveling at sonic or supersonic speeds,

f) use or occupation by the Procuring Entity of any part of the Permanent Works, except as may be specified in the Contract,

g) design of any part of the Works by the Procuring Entity's Personnel or by others for whom the Procuring Entity is responsible, and

h) any operation of the forces of nature which is Unforeseeable or against which an experienced contractor could not reasonably have been expected to have taken adequate preventive precautions.

17.4 Consequences of Procuring Entity's Risks

17.4.1 If and to the extent that any of the risks listed in Sub-Clause 17.3 above results in loss or damage to the Works, Goods or Contractor's Documents, the Contractor shall promptly give notice to the Engineer and shall rectify this loss or damage to the extent required by the Engineer.

17.4.2 If the Contractor suffers delay and/or incurs Cost from rectifying this loss or damage, the Contractor shall give a further notice to the Engineer and shall be entitled subject to Sub-Clause 20.1[Contractor's Claims] to:

17.4.2.1 an extension of time for any such delay, if completion is or will be delayed, under Sub-Clause 8.4 [Extension of Time for Completion], and

17.4.2.2 payment of any such Cost, which shall be included in the Contract Price. In the case of sub-paragraphs (f) and (g) of Sub-Clause 17.3 [Procuring Entity's Risks], Cost plus profit shall be payable.

17.4.3 After receiving this further notice, the Engineer shall proceed in accordance with Sub-Clause 3.5 [Determinations] to agree or determine these matters.

17.5 Intellectual and Industrial Property Rights

17.5.1 In this Sub-Clause, "infringement" means an infringement (or alleged infringement) of any patent, registered design, copyright, trademark, tradename, trade secret or other intellectual or industrial property right relating to the Works; and "claim" means a claim (or proceedings pursuing a claim) alleging an infringement.

17.5.2 Whenever a Party does not give notice to the other Party of any claim within 30 days of receiving the claim, the first Party shall be deemed to have waived any right to indemnity under this Sub-Clause.

17.5.3 The Procuring Entity shall indemnify and hold the Contractor harmless against and from any claim alleging an infringement which is or was:

17.5.3.1 An unavoidable result of the Contractor's compliance with the Contract, or

17.5.3.2 A result of any Works being used by the Procuring Entity:

17.5.3.2.1 For a purpose other than that indicated by, or reasonably to be inferred from, the

17.5.3.2.2 Contract, or

17.5.3.2.3 In conjunction with anything not supplied by the Contractor, unless such use was disclosed to the Contractor prior to the Base Date or is stated in the Contract.

17.5.4 The Contractor shall indemnify and hold the Procuring Entity harmless against and from any other claim which arises out of or in relation to (i) the manufacture, use, sale or import of any Goods, or (ii) any

design for which the Contractor is responsible.

17.5.5 If a Party is entitled to be indemnified under this Sub-Clause, the indemnifying Party may (at its cost) conduct negotiations for the settlement of the claim, and any litigation or arbitration which may arise from it. The other Party shall, at the request and cost of the indemnifying Party, assist in contesting the claim. This other Party (and its Personnel) shall not make any admission which might be prejudicial to the indemnifying Party, unless the indemnifying Party failed to take over the conduct of any negotiations, litigation or arbitration upon being requested to do so by such other Party.

17.6 Limitation of Liability

17.6.1 Neither Party shall be liable to the other Party for loss of use of any Works, loss of profit, loss of any contractor for any indirect or consequential loss or damage which may be suffered by the other Party in connection with the Contract, other than as specifically provided in Sub-Clause 8.7 [Delay Damages]; Sub-Clause 11.2 [Cost of Remedying Defects]; Sub-Clause 15.4 [Payment after Termination]; Sub-Clause 16.4 [Payment on Termination]; Sub-Clause17.1 [Indemnities]; Sub-Clause 17.4 (b) [Consequences of Procuring Entity's Risks] and Sub-Clause 17.5[Intellectual and Industrial Property Rights].

17.6.2 The total liability of the Contractor to the Procuring Entity, under or in connection with the Contract other than under Sub-Clause 4.19 [Electricity, Water and Gas], Sub-Clause 4.20 [Procuring Entity's Equipment and Free- Issue Materials], Sub-Clause 17.1 [Indemnities] and Sub-Clause 17.5 [Intellectual and Industrial Property Rights], shall not exceed the sum resulting from the application of a multiplier (less or greater than one) to the Accepted Contract Amount, as stated in the **SCC**, or (if such multiplier or other sum is not so stated) the Accepted Contract Amount.

17.6.3 This Sub-Clause shall not limit liability in any case of fraud, deliberate default or reckless misconduct by the defaulting Party.

17.7 Use of Procuring Entity's Accommodation/Facilities

17.7.1 The Contractor shall take full responsibility for the care of the Procuring Entity provided accommodation and facilities, if any, as detailed in the Specification, from the respective dates of hand-over to the Contract or until cessation of occupation (where hand-over or cessation of occupation may take place after the date stated in the Taking-Over Certificate for the Works).

17.7.2 If any loss or damage happens to any of the above items while the Contractor is responsible for their care arising from any cause whatsoever other than those for which the Procuring Entity is liable, the Contractor shall, at his own cost, rectify the loss or damage to the satisfaction of the Engineer.

18. INSURANCE

18.1 General Requirements for Insurances

18.1.1 In this Clause, "insuring Party" means, for each type of insurance, the Party responsible for effecting and maintaining the insurance specified in the relevant Sub-Clause.

18.1.2 Wherever the Contractor is the insuring Party, each insurance shall be effected with insurers and in terms approved by the Procuring Entity. These terms shall be consistent with any terms agreed by both Parties before the date of the Letter of Acceptance. This agreement of terms shall take precedence over the provisions of this Clause.

18.1.3 Wherever the Procuring Entity is the insuring Party, each insurance shall be effected with insurers and in terms acceptable to the Contractor. These terms shall be consistent with any terms agreed by both Parties before the date of the Letter of Acceptance. This agreement of terms shall take precedence over the provisions of this Clause.

18.1.4 If a policy is required to indemnify joint insured, the cover shall apply separately to each insured as though a separate policy had been issued for each of the joint insured. If a policy indemnifies additional joint insured, namely in addition to the insured specified in this Clause, (i) the Contractor shall act under the policy on behalf of these additional joint insured except that the Procuring Entity shall act for Procuring Entity's Personnel, (ii) additional joint insured shall not be entitled to receive payments directly from the insurer or to have any other direct dealings with the insurer, and (iii) the insuring Party shall require all additional joint insured to comply with the conditions stipulated in the policy.

18.1.5 Each policy insuring against loss or damage shall provide for payments to be made in the currencies required to rectify the loss or damage. Payments received from insurers shall be used for the rectification of the loss or damage.

18.1.6 The relevant insuring Party shall, within the respective periods stated in the **SCC** (calculated from the Commencement Date), submit to the other Party:

18.1.6.1 Evidence that the insurances described in this Clause have been effected, and

18.1.6.2 Copies of the policies for the insurances described in Sub-Clause 18.2 [Insurance for Works and Contractor's Equipment] and Sub-Clause 18.3 [Insurance against Injury to Persons and Damage to Property].

18.1.7 When each premium is paid, the insuring Party shall submit evidence of payment to the other Party. Whenever evidence or policies are submitted, the insuring Party shall also give notice to the Engineer.

18.1.8 Each Party shall comply with the conditions stipulated in each of the insurance policies. The insuring Party shall keep the insurers informed of any relevant changes to the execution of the Works and ensure that insurance is maintained in accordance with this Clause.

Neither Party shall make any material alteration to the terms of any insurance without the prior approval of the other Party. If an insurer makes (or attempts to make) any alteration, the Party first notified by the insurer shall promptly give notice to the other Party.

18.1.9 The insuring Party fails to effect and keep in force any of the insurances it is required to effect and maintain under the Contract or fails to provide satisfactory evidence and copies of policies in accordance with this Sub- Clause, the other Party may (at its option and without prejudice to any other right or remedy) effect insurance for the relevant coverage and pay the premiums due. The insuring Party shall pay the amount of these premiums to the other Party, and the Contract Price shall be adjusted accordingly.

18.1.10 Nothing in this Clause limits the obligations, liabilities or responsibilities of the Contractor or the Procuring Entity, under the other terms of the Contractor otherwise. Any amounts not insured or not recovered from the insurers shall be borne by the Contractor and/or the Procuring Entity in accordance with these obligations, liabilities or responsibilities. However, if the insuring Party fails to effect and keep in force an insurance which is available and which it is required to effect and maintain under the Contract, and the other Party neither approves the omission nor effects insurance for the coverage relevant to this default, any moneys which should have been recoverable under this insurance shall be paid by the insuring Party.

18.1.11 Payments by one Party to the other Party shall be subject to Sub-Clause 2.5 [Procuring Entity's Claims] or Sub- Clause 20.1[Contractor's Claims], as applicable.

18.1.12 The Contractor shall be entitled to place all insurance relating to the Contract (including, but not limited to the insurance referred to Clause18) with insurers from any eligible source country.

18.2 Insurance for Works and Contractor's Equipment

18.2.1 The insuring Party shall insure the Works, Plant, Materials and Contractor's Documents for not less than the full reinstatement cost including the costs of demolition, removal of debris and professional fees and profit. This insurance shall be effective from the date by which the evidence is to be submitted under sub-paragraph (a) of Sub-Clause 18.1 [General Requirements for Insurances], until the date of issue of the Taking-Over Certificate for the Works.

18.2.2 The insuring Party shall maintain this insurance to provide cover until the date of issue of the Performance Certificate, for loss or damage for which the Contractor is liable arising from a cause occurring prior to the issue of the Taking-Over Certificate, and for loss or damage caused by the Contractor in the course of any other operations (including those under Clause 11 [Defects Liability]).

18.2.3 The insuring Party shall insure the Contractor's Equipment for not less than the full replacement value, including delivery to Site. For each item of Contractor's Equipment, the insurance shall be effective while it is being transported to the Site and until it is no longer required as Contractor's Equipment.

18.2.4 Unless otherwise stated in the Particular Conditions, insurances under this Sub-Clause:

18.2.4.1 Shall be effected and maintained by the Contractor as insuring Party,

18.2.4.2 shall be in the joint names of the Parties, who shall be jointly entitled to receive payments from the insurers, payments being held or allocated to the Party actually bearing the costs of rectifying the loss or damage,

18.2.4.3 shall cover all loss and damage from any cause not listed in Sub-Clause 17.3 [Procuring Entity's Risks],

18.2.4.4 shall also cover, to the extent specifically required in the tendering documents of the Contract, loss or damage to a part of the Works which is attributable to the use or occupation by the Procuring Entity of another part of the Works, and loss or damage from the risks listed in sub-paragraphs (c), (g) and (h) of Sub-Clause 17.3 [Procuring Entity's Risks], excluding (in each case)

risks which are not insurable at commercially reasonable terms, with deductibles per occurrence of not more than the amount stated in the **SCC**(if an amount is not so stated, this sub-paragraph (d) shall not apply), and

18.2.4.5 may however exclude loss of, damage to, and reinstatement of:

18.2.4.5.1 a part of the Works which is in a defective condition due to a defect in its design, materials or workmanship (but cover shall include any other parts which are lost or damaged as a direct result of this defective condition and not as described in sub-paragraph (ii) below),

18.2.4.5.2 a part of the Works which is lost or damaged in order to reinstate any other part of the Works if this other part is in a defective condition due to a defect in its design, materials or workmanship,

18.2.4.5.3 a part of the Works which has been taken over by the Procuring Entity, except to the extent that the Contractor is liable for the loss or damage, and

18.2.4.5.4 Goods while they are not in the Country, subject to Sub-Clause 14.5 [Plant and Materials intended for the Works].

18.2.5 If, more than one year after the Base Date, the cover described in sub-paragraph (d) above ceases to be available at commercially reasonable terms, the Contractor shall (as insuring Party) give notice to the Procuring Entity, with supporting particulars. The Procuring Entity shall then (i) be entitled subject to Sub- Clause 2.5 [Procuring Entity's Claims] to payment of an amount equivalent to such commercially reasonable terms as the Contractor should have expected to have paid for such cover, and (ii) be deemed, unless he obtains the cover at commercially reasonable terms, to have approved the omission under Sub-Clause 18.1 [General Requirements for Insurances].

18.3 Insurance against Injury to Persons and Damage to Property

18.3.1 The insuring Party shall insure against each Party's liability for any loss, damage, death or bodily injury which may occur to any physical property (except things insured under Sub-Clause 18.2 [Insurance for Works and Contractor's Equipment]) or to any person (except persons insured under Sub-Clause 18.4 [Insurance for Contractor's Personnel]), which may arise out of the Contractor's performance of the Contract and occurring before the issue of the Performance Certificate.

18.3.2 This insurance shall be for a limit per occurrence of not less than the amount stated in the **SCC**, with no limit on the number of occurrences. If an amount is not stated in the **SCC**, this Sub-Clause shall not apply. Unless otherwise stated in the Particular Conditions, the insurances specified in this Sub-Clause:

18.3.2.1 Shall be effected and maintained by the Contractor as insuring Party,

18.3.2.2 Shall be in the joint names of the Parties,

18.3.2.3 Shall be extended to cover liability for all loss and damage to the Procuring Entity's property (except things insured under Sub-Clause 18.2) arising out of the Contractor's performance of the Contract, and

18.3.2.4 May however exclude liability to the extent that it arises from:

18.3.2.4.1 The Procuring Entity's right to have the Permanent Works executed on, over, under, in or through any land, and to occupy this land for the Permanent Works,

18.3.2.4.2 damage which is an unavoidable result of the Contractor's obligations to execute the Works and remedy any defects, and

18.3.2.4.3 a cause listed in Sub-Clause 17.3 [Procuring Entity's Risks], except to the extent that cover is available at commercially reasonable terms.

18.4 Insurance for Contractor's Personnel

18.4.1 The Contract or shall effect and maintain insurance against liability for claims, damages, losses and expenses (including legal fees and expenses) arising from injury, sickness, disease or death of any person employed by the Contractor or any other of the Contractor's Personnel.

18.4.2 The insurance shall cover the Procuring Entity and the Engineer against liability for claims, damages, losses and expenses (including legal fees and expenses) arising from injury, sickness, disease or death of any person employed by the Contractor or any other of the Contractor's Personnel, except that this insurance may exclude losses and claims to the extent that they arise from any act or neglect of the Procuring Entity or of the Procuring Entity's Personnel.

18.4.3 The insurance shall be maintained in full force and effect during the whole time that these personnel are assisting in the execution of the Works. For a Subcontractor's employees, the insurance may be effected by the Subcontractor, but the Contractor shall be responsible for compliance with this Clause.

19. FORCE MAJEURE

19.1 Definition of Force Majeure

19.1.1 In this Clause, "Force Majeure" means an exceptional event or circumstance:

a) Which is beyond a Party's control,

b) Which such Party could not reasonably have provided against before entering into the Contract,

c) Which, having arisen, such Party could not reasonably have avoided or overcome, and

d) Which is not substantially attributable to the other Party.

19.1.2 Force Majeure may include, but is not limited to, exceptional events or circumstances of the kind listed below, so long as conditions (a) to (d) above are satisfied:

i) war, hostilities (whether war be declared or not), invasion, act of foreign enemies,

ii) rebellion, terrorism, sabotage by persons other than the Contractor's Personnel, revolution, insurrection, military or usurped power, or civil war,

iii) riot, commotion, disorder, strike or lock out by persons other than the Contractor's Personnel,

iv) munitions of war, explosive materials, ionizing radiation or contamination by radio-activity, except as may be attributable to the Contractor's use of such munitions, explosives, radiation or radio- activity, and

v) natural catastrophes such as earthquake, hurricane, typhoon or volcanic activity.

19.2 Notice of Force Majeure

19.2.1 If a Party is or will be prevented from performing its substantial obligations under the Contract by Force Majeure, then it shall give notice to the other Party of the event or circumstances constituting the Force Majeure and shall specify the obligations, the performance of which is or will be prevented. The notice shall be given within 14 days after the Party became aware, or should have become aware, of the relevant event or circumstance constituting Force Majeure.

19.2.2 The Party shall, having given notice, be excused performance of its obligations for so long as such Force Majeure prevents it from performing them.

Notwithstanding any other provision of this Clause, Force Majeure shall not apply to obligations of either Party to make payments to the other Party under the Contract.

19.3 Duty to Minimize Delay

Each Party shall at all times use all reasonable endeavors to minimize any delay in the performance of the Contract as a result of Force Majeure. A Party shall give notice to the other Party when it ceases to be affected by the Force Majeure.

19.4 Consequences of Force Majeure

19.4.1 If the Contractor is prevented from performing his substantial obligations under the Contract by Force Majeure of which notice has been given under Sub-Clause 19.2 [Notice of Force Majeure], and suffers delay and/or incurs Cost by reason of such Force Majeure, the Contractor shall be entitled subject to Sub-Clause
20.1 [Contractor's Claims] to:

a) an extension of time for any such delay, if completion is or will be delayed, under Sub-Clause 8.4 [Extension of Time for Completion], and

b) if the event or circumstance is of the kind described in sub-paragraphs (i) to (iv) of Sub-Clause 19.1 [Definition of Force Majeure] and, in sub-paragraphs (ii) to (iv), occurs in the Country, payment of any such Cost, including the costs of rectifying or replacing the Works and/or Goods damaged or destroyed by Force Majeure, to the extent they are not indemnified through the insurance policy referred to in Sub- Clause 18.2 [Insurance for Works and Contractor's Equipment].

19.4.2 After receiving this notice, the Engineer shall proceed in accordance with Sub-Clause 3.5 [Determinations] to agree or determine these matters.

19.5 Force Majeure Affecting Subcontractor

If any Subcontractor is entitled under any contract or agreement relating to the Works to relief from force majeure on terms additional to or broader than those specified in this Clause, such additional or broader force majeure events or circumstances shall not excuse the Contractor's non-performance or entitle him to relief under this Clause.

19.6 Optional Termination, Payment and Release

If the execution of substantially all the Works in progress is prevented for a continuous period of 84 days by reason of Force Majeure of which notice has been given under Sub-Clause 19.2 [Notice of Force Majeure], or for multiple periods which total more than 140 days due to the same notified Force Majeure, then either Party may give to the other Party a notice of termination of the Contract. In this event, the termination shall take effect 7 days after the notice is given, and the Contractor shall proceed in accordance with Sub-Clause 16.3 [Cessation of Work and Removal of Contractor's Equipment].

Upon such termination, the Engineer shall determine the value of the work done and issue a Payment Certificate which shall include:

a) The amounts payable for any work carried out for which a price is stated in the Contract;

b) The Cost of Plant and Materials ordered for the Works which have been delivered to the Contractor, or of which the Contractor is liable to accept delivery: this Plant and Materials shall become the property of (and be at the risk of) the Procuring Entity when paid for by the Procuring Entity, and the Contractor shall place the same at the Procuring Entity's disposal;

c) other Cost or liabilities which in the circumstances were reasonably and necessarily incurred by the Contractor in the expectation of completing the Works;

d) the Cost of removal of Temporary Works and Contractor's Equipment from the Site and there turn of these items to the Contractor's works in his country (or to any other destination at no greater cost); and

e) the Cost of repatriation of the Contractor's staff and labor employed wholly in connection with the Works at the date of termination.

19.7 Release from Performance

Notwithstanding any other provision of this Clause, if any event or circumstance outside the control of the Parties (including, but not limited to, Force Majeure) arises which makes it impossible or unlawful for either or both Parties to fulfil its or their contractual obligations or which, under the law governing the Contract, entitles the Parties to be released from further performance of the Contract, then upon notice by either Party to the other Party of such event or circumstance:

a) The Parties shall be discharged from further performance, without prejudice to the rights of either Party in respect of any previous breach of the Contract, and

b) The sum payable by the Procuring Entity to the Contractor shall be the same as would have been payable under Sub-Clause 19.6 [Optional Termination, Payment and Release] if the Contract had been terminated under Sub-Clause 19.6.

20. CLAIMS, DISPUTES AND ARBITRATION

20.1 Contractor's Claims

20.1.1 If the Contractor considers itself to be entitled to any extension of the Time for Completion and/or any additional payment, under any Clause of these Conditions or otherwise in connection with the Contract, the Contractor shall give Notice to the Engineer, describing the event or circumstance giving rise to the claim. The notice shall be given as soon as practicable, and not later than 30 days after the Contractor became aware, or should have become aware, of the event or circumstance.

20.1.2 IftheContractorfailstogivenoticeofaclaimwithinsuchperiodof30days, the Time for Completion shall not be extended, the Contractor shall not be entitled to additional payment, and the Procuring Entity shall be discharged from all liability in connection with the claim. Otherwise, the following provisions of this Sub- Clause shall apply.

20.1.3 The Contractor shall also submit any other notices which are required by the Contract, and supporting particulars for the claim, all as relevant to such event or circumstance.

20.1.3 The Contractor shall keep such contemporary records as may be necessary to substantiate any claim, either on the Site or at another location acceptable to the Engineer. Without admitting the Procuring Entity's liability, the Engineer may, after receiving any notice under this Sub-Clause, monitor the record-keeping and/or instruct the Contractor to keep further contemporary records. The Contractor shall permit the Engineer to inspect all these records, and shall (if instructed) submit copies to the Engineer.

20.1.4 Within 42 days after the Contractor became aware (or should have become aware) of the event or circumstance giving rise to the claim, or within such other period as may be proposed by the Contractor and approved by the Engineer, the Contractor shall send to the Engineer a fully detailed claim which includes full supporting particulars of the basis of the claim and of the extension of time and/or additional payment claimed. If the event or circumstance giving rise to the claim has a continuing effect:

a) This fully detailed claim shall be considered as interim;
b) The Contractor shall send further interim claims at monthly intervals, giving the accumulated delay and/or amount claimed, and such further particulars as the Engineer may reasonably require; and
c) The Contractor shall send a final claim within 30 days after the end of the effects resulting from the event or circumstance, or within such other period as may be proposed by the Contractor and approved by the Engineer.

20.1.5 Within 42 days after receiving a Notice of a claim or any further particulars supporting a previous claim, or within such other period as may be proposed by the Engineer and approved by the Contractor, the Engineer shall respond with approval, or with disapproval and detailed comments. He may also request any necessary further particulars, but shall nevertheless give his response on the principles of the claim within the above defined time period.

20.1.6 Within the above defined period of 42 days, the Engineer shall proceed in accordance with Sub-Clause 3.5 [Determinations] to agree or determine (i) the extension (if any) of the Time for Completion (before or after its expiry) in accordance with Sub-Clause 8.4 [Extension of Time for Completion], and/or (ii) the additional payment (if any) to which the Contractor is entitled under the Contract.

20.1.7 Each Payment Certificate shall include such additional payment for any claim as has been reasonably substantiated as due under the relevant provision of the Contract. Unless and until the particulars supplied are sufficient to substantiate the whole of the claim, the Contractor shall only be entitled to payment for such part of the claim as he has been able to substantiate.

20.1.8 If the Engineer does not respond within the time frame defined in this Clause, either Party may consider that the claim is rejected by the Engineer and any of the Parties may refer to Arbitration in accordance with Sub-Clause 20.4 [Arbitration].

20.1.9 The requirements of this Sub-Clause are in addition to those of any other Sub-Clause which may apply toa claim. If the Contractor fails to comply with this or another Sub-Clause in relation to any claim, any extension of time and/or additional payment shall take account of the extent (if any) to which the failure has prevented or prejudiced proper investigation of the claim, unless the claim is excluded under the second paragraph of Sub- Clause 20.3 (f).

20.2 Amicable Settlement

Where a notice of a claim has been given, both Parties shall attempt to settle the dispute amicably before the commencement of arbitration. However, unless both Parties agree otherwise, the Party giving a notice of a claim in accordance with Sub-Clause 20.1 above should move to commence arbitration after the fifty-sixth day from the day on which a notice of a claim was given, even if no attempt at an amicable settlement has been made.

20.3 Matters that may be referred to arbitration

Notwithstanding anything stated herein the following matters may be referred to arbitration before the practical completion of the Works or abandonment of the Works or termination of the Contract by either party:

a) The appointment of a replacement Engineer upon the said person ceasing to act.
b) Whether or not the issue of an instruction by the Engineer is empowered by these Conditions.
c) Whether or not a certificate has been improperly withheld or is not in accordance with these Conditions.
e) Any dispute arising in respect of war risks or war damage.
f) All other matters shall only be referred to arbitration after the completion or alleged completion of the Works or termination or alleged termination of the Contract, unless the Procuring Entity and the Contract or agree otherwise in writing.

20.4 Arbitration

20.4.1 Any claim or dispute between the Parties arising out of or in connection with the Contract not settled amicably in accordance with Sub-Clause 20.3 shall be finally settled by arbitration.

20.4.2 No arbitration proceedings shall be commenced on any claim or dispute where notice of a claim or dispute has not been given by the applying party within ninety days of the occurrence or discovery of

the matter or issue giving rise to the dispute.

20.4.3 Notwithstanding the issue of a notice as stated above, the arbitration of such a claim or dispute shall not commence unless an attempt has in the first instance been made by the parties to settle such claim or dispute amicably with or without the assistance of third parties. Proof of such attempt shall be required.

20.4.4 The Arbitrator shall, without prejudice to the generality of his powers, have powers to direct such measurements, computations, tests or valuations as may in his opinion be desirable in order to determine the rights of the parties and assess and award any sums which ought to have been the subject of or included in any certificate.

20.4.5 The Arbitrator shall, without prejudice to the generality of his powers, have powers to open up, review and revise any certificate, opinion, decision, requirement or notice and to determine all matters in dispute which shall be submitted to him in the same manner as if no such certificate, opinion, decision requirement or notice had been given.

20.4.6 The arbitrators shall have full power to open up, review and revise any certificate, determination, instruction, opinion or valuation of the Engineer, relevant to the dispute. Nothing shall disqualify representatives of the Parties and the Engineer from being called as a witness and giving evidence before the arbitrators on any matter whatsoever relevant to the dispute.

20.4.7 Neither Party shall be limited in the proceedings before the arbitrators to the evidence, or to the reasons for dissatisfaction given in its Notice of Dissatisfaction.

20.4.7 Arbitration may be commenced prior to or after completion of the Works. The obligations of the Parties, and the Engineer shall not be altered by reason of any arbitration being conducted during the progress of the Works.

20.4.8 The terms of the remuneration of each or all the members of Arbitration shall be mutually agreed upon by the Parties when agreeing the terms of appointment. Each Party shall be responsible for paying one-half of this remuneration.

20.5 Arbitration with National Contractors

20.5.1 If the Contract is with national contractors, arbitration proceedings will be conducted in accordance with the Arbitration Laws of Kenya. In case of any claim or dispute, such claim or dispute shall be notified in writing by either party to the other with a request to submit it to arbitration and to concur in the appointment of an Arbitrator within thirty days of the notice. The dispute shall be referred to the arbitration and final decision of a person to be agreed between the parties. Failing agreement to concur in the appointment of an Arbitrator, the Arbitrator shall be appointed, on the request of the applying party, by the Chairman or Vice Chairman of any of the following professional institutions;

i) Architectural Association of Kenya
ii) Institute of Quantity Surveyors of Kenya
iii) Association of Consulting Engineers of Kenya
iv) Chartered Institute of Arbitrators (Kenya Branch)
v) Institution of Engineers of Kenya

20.5.2 The institution written to first by the aggrieved party shall take precedence over all other institutions.

20.6 Arbitration with Foreign Contractors

20.7.1 Arbitration with foreign contractors shall be conducted in accordance with the arbitration rules of the United Nations Commission on International Trade Law (UNCITRAL); or with proceedings administered by the International Chamber of Commerce (ICC) and conducted under the ICC Rules of Arbitration; by one or more arbitrators appointed in accordance with said arbitration rules.

20.7.2 The place of arbitration shall be a location specified in the **SCC;** and the arbitration shall be conducted in the language for communications defined in Sub-Clause 1.4 [Law and Language].

20.7 Alternative Arbitration Proceedings

Alternatively, the Parties may refer the matter to the Nairobi Centre for International Arbitration (NCIA) which offers a neutral venue for the conduct of national and international arbitration with commitment

to providing institutional support to the arbitral process.

208 Failure to Comply with Arbitrator's Decision

208.1 The award of such Arbitrator shall be final and binding upon the parties.

208.2 In the event that a Party fails to comply with a final and binding Arbitrator's decision, then the other Party may, without prejudice to any other rights it may have, refer the matter to a competent court of law.

209 Contract operations continue

Notwithstanding any reference to arbitration herein,

a) The parties shall continue to perform their respective obligations under the Contract unless they otherwise agree; and

b) The Procuring Entity shall pay the Contractor any monies due the Contractor.

SECTION VIII - SPECIAL CONDITIONS OF CONTRACT/APPENDIX TO FORM OF TENDER

The following Particular Conditions modify and compliment like-numbered clauses in the General Conditions of Contract. Both parts shall be read together, with the Special Conditions of Contract prevailing in case of conflict or discrepancy. Clauses of the General Conditions of Contract not specifically modified and supplemented shall remain in effect.

CONDITIONS OF PARTICULAR APPLICATION (CONDITIONS OF CONTRACT)

NOTES:

The Conditions of Particular Application (Conditions of Contract, Part B) modify and compliment like-numbered clauses in the General Conditions of Contract.

Both parts shall be read together, with the Conditions of Particular Application prevailing in case of conflict or discrepancy. Clauses of the General Conditions of Contract not specifically modified and supplemented shall remain in effect.

GENERAL PROVISIONS

1.1.2 The Contract

Replace Sub-Clause 1.1.2 with the following;

The word "Tender" and its derivatives are synonymous with the word 'Bid,' and its derivatives, and the words 'Tender Documents' with 'Bidding Documents'.

"Special Conditions of Contract" also means Appendix to form of tender.

1.1.3 Parties and Persons

Replace the definition of the Procuring Entity with following;

"Procuring Entity" means the Entity named in the appendix to form of Tender and the word "Procuring Entity" and its derivatives are synonymous with the word 'Employer,' and its derivatives.

1.1.4 Dates, Tests, Periods and Completion

Add the following after the end of the definition of "Day":

Dates shall be construed in accordance with the Gregorian Calendar.

1.1.7 Other Definitions

Add the following paragraph at the end of the definition of "Site":

The aforesaid includes lands waters, river beds and other places on, under, in through which the Works are to be carried out including all offices, workshops or places where materials are to be stored or used for the purposes of the Contract. It also includes quarries; borrow pits, stock pile areas and spoil areas"

1.4 Law and Language

Add the following paragraph at the end of sub-clause 1.4.1:

Except to the extent otherwise provided by the Contract, the Kenyan courts shall have exclusive jurisdiction to hear and to determine all actions and proceedings in connection with and arising out of the Contract and the Contractor shall submit to the jurisdiction of Kenyan courts for the purpose of any such actions and proceedings.

1.5 Priority of Contract Documents

Delete the documents listed as (a) to (i) and substitute with the following:

(1) The Contract Agreement (if completed)
(2) The Letter of Acceptance
(3) Minutes of Pre-Contract Award Discussion
(3) Form of tender and Appendix to Form of tender
(4) The Conditions of Contract, Part II; Conditions of Particular Application
(5) The Conditions of Contract, Part I; General Conditions of Contract
(6) The Special Specifications
(7) The Standard Specifications for Road and Bridge Construction, Ministry of Transport and Communications, 1986

(8) Clarifications and Rectifications accepted by the Employer
(9) The Drawings
(10) The priced Bill of Quantities
(11) Schedules and other documents forming part of the Contract.

Add to Clause 1.8 the following Subclauses 1.8.5 to 1.8.11:

1.8.5 Metric Units

All units used in the Contract shall be metric and for measurement of angles the 360 degrees circles systems shall be used

1.8.6 Intent of Drawings and Specifications

The intent of Drawings and Specifications is to describe the details for the complete construction and maintenance of the Works which the Contractor undertakes to perform in accordance with the terms of the Contract.

Where the Drawings or Specifications describe portions of the Works in general terms, but not in complete detail, it is understood that only materials and workmanship of the first quality are to be used. First quality refers to the quality as approved by the Engineer.

Unless otherwise specified, the Contractor shall furnish all labour, material, tools, equipment and incidentals, and do all the work involved in executing the Contract in a satisfactory and workman-like manner.

1.8.7 Design, Drawings and Specifications Prepared by the Contractor

No payment will be made to the Contractor for undertaking any kind of design work, preparation of drawings and specification, other than that specifically required by the terms of the Contract. Payment for design work, preparation of drawings and specifications, specifically required by the terms of the Contract shall be deemed to be included in the Rates and Lump Sums entered in the Bill of Quantities.

1.8.7 Submissions of Designs and Drawings

All detailed working drawings/shop drawings, design calculations and fabrication drawings for Temporary Works (such as formwork, staging, centring, scaffolding, specialized constructional, handling and launching equipment and the like) as well as bar bending and cutting schedules for reinforcement, material lists for structural fabrication including detailed drawings for templates, end anchorage and temporary support details for pre-stressing cables shall be prepared by the Contractor at his own cost and forwarded in triplicate to the Engineer at least six weeks in advance of actual constructional requirements. The Engineer will check and return one copy of the same for the Contractor's use with amendments, if any, noted in red ink. Such approval shall not relieve the Contractor of any of his responsibilities in connection with temporary works.

The Contractor will supply four copies of the approved drawings for the Engineer's use. The cost of preparing all such items of work shall be deemed to have been included in the respective rates/prices quoted by the Contractor in the Bill of Quantities.

1.8.8 As-Built Drawings

On completion of the Works, the Contractor shall arrange to furnish to the Employer two (2) bound sets of all "As Built" drawings for every component of the Works at his own cost, all such copies being on Polyester film of quality to be approved by the Engineer or his Representative and digitized copy (2 No.) in a Compact Discs (CDs) of quality approved by the Engineer or his Representative. The Taking-over Certificate of the Works, as per the provisions of Sub-Clause 10.1 herein, shall not be issued by the Engineer in the event of the Contractor's failure to furnish the aforesaid "As Built" drawings for the entire works."

1.8.9 Drawings for Temporary Works

Drawings for Temporary works to be carried out by the Contractor shall be submitted to the Engineer for approval.

Working drawings of concrete structures consisting of such details as may be reasonably required

for the successful execution of the work and which are not included in the plans furnished by the Employer, shall be prepared by the Contractor. Three sets of working drawings shall be submitted to the Engineer for approval.

1.8.10 Size of Drawings

All drawings submitted by the Contractor shall for convenience in filing be as far as possible of a uniform size, and not more than 1010 mm x 680 mm. The drawings shall be numbered and dated, and shall include the title of the Contract at the bottom of the drawing followed by the title of the drawing. All drawings shall have the appropriate scales drawn on them and notes shall be in English. All amendments to such drawings shall be noted and dated on the drawing.

1.8.11 Submission to the Engineer

Whenever the Contractor is required to submit to the Engineer proposals, details, drawings, calculations information, literature, materials, test report and certificates, the Engineer will consider each submission and, if appropriate, will reply to the Contractor in accordance with the relevant provision of the Conditions of Contract. Unless a defined period of time is stated in the contract, each submission shall be made by dates to be agreed with the Engineer having regard to the approved programme and the need to give the Engineer adequate time to consider each submission.

The approval of the Engineer of any submission shall not relieve the Contractor of his responsibilities under the Contract.

Add Sub-clause 1.16 as below:

1.16.1 Monthly Site Meetings

The Contractor or his authorized representative shall attend monthly meetings on the site with representatives of the Employer and the Engineer at dates and times to be determined by the Engineer. Such meetings will be held for evaluating the progress of the Contract and for discussion of matters pertaining to the Contract which any of the parties represented may wish to raise. Such meetings are not intended for discussing matters concerning the normal day-to-day running of the Contract.
The Contractor shall prepare and submit to the Resident Engineer one week before the meeting a monthly report in the format approved by the Engineer giving all the information and details regarding its accomplishment against the prevailing approved programme.

1.16.2 Minutes of Site Meetings

Agreements recorded in the Minutes of the Site Meetings are binding to all parties, if objections to the minutes have not been given in due time.

The Minutes of the Site Meetings shall be issued within 7 days and shall be numbered consecutively. Minutes shall be deemed to have been received by the Contractor unless the Contractor gives notice at the following meeting that the Minutes were not received.

Any objections to the Minutes of the Site Meetings shall at the latest be raised at the succeeding Site Meeting or presented to the Engineer in writing not later than 2 weeks after the meeting. If the Contractor at this time has not received the Minutes of the Site Meeting, the objection must be given in writing to the Engineer not later than 2 working days after the subsequent receipt of the said Minutes.

THE PROCURING ENTITY

2.1 Right of Access to the Site

Change the title of this Sub-clause from "Right of Access to the Site" to "Possession of Site and Access Thereto"

At the end of Subclause 2.1, add the following:

The Contractor shall bear all costs and charges for such lands as the Contractor may reasonably require for camps, offices, workshops, diversion roads, borrow pits, and quarries and any additional facilities outside the site required by him for the purpose of works.

The Contractor shall not use any portion of the Site for any purpose not connected with the Works.

2.3 Procuring Entity's Personnel

No official of the Employer or the Engineer or the Engineer's Representative or anyone of their respective staffs or their employees shall be in any way personally bound or liable for the acts or obligations of the Employer under the Contract or answerable for default or omission in the observance or performance of any of the acts, matters or things which are herein contained.

2.4 Procuring Entity's Financial Arrangement

Delete this Clause in its entirety and replace with;

The source of funding is the Government of Kenya through the Development Vote.

THE ENGINEER

3.1 Engineer's Duties and Authority

With reference to Sub-Clause 3.1.2: Add the following

The Engineer shall obtain specific approval of the Employer before taking any of the following actions specified in the General Conditions of Contract:

(a) Consenting to the sub-contracting of any part of the Works under Sub-clause 4.4.1.
(b) Authorising the use of provisional sums in excess of the monetary limit for variations
(c) Issuing any Taking-over Certificate
(d) Certifying additional payment/costs under Sub-clause 17.4.2;
(e) Issuing a Completion Certificate under Clause 11.9
(f) Fixing rates or prices under Sub-clause 12.3.2 (b).

THE CONTRACTOR

4.1 Contractors General Responsibilities

Add to Sub-clause 4.1.3 after the last sentence the following:

Materials delivered to the site by Contractor or materials made available or supplied by the Employer shall be used solely for the execution of the Works.

Add to Subclause 4.1 the following:

4.1.8 Within 28 days after receipt of the Engineer's Order to Commence the Works, the Contractor shall establish an office at the Site duly equipped for the Contractor's representative and his superintending personnel.

The Contractor shall maintain this office throughout the Contract period. The said office shall be the legal domicile of the Contractor, and all correspondence sent to this office shall be deemed to have been sent to the Contractor's head office.

4.1.9 A foreign Contractor or a Kenya-foreign joint venture, if not registered in Kenya under the

applicable laws of Kenya, shall undertake registration upon receipt of the Letter of Acceptance and prior to signing of the Contract.

4.1.10 The Contractor shall comply with the current Government regulations with regard to the transport, storage and use of explosives and radio-active materials and use of radio communication equipment.

4.1.11 The contractor shall keep in close contact with the police, Labour officers and all other officials as appropriate regarding their requirements for the control of workmen, restricted area permits or other matters and shall provide all assistance and facilities which may be required by such officials in the execution of their duties.

4.1.12 The Contractor shall be deemed to have fully familiarised himself with planned construction operations or any other concurrent construction projects in Kenya which may have any material effect on the Contractor's own operations. In particular, the Contractor shall be deemed to have allowed for the effects of other concurrent construction contract(s) on any necessary transportation operations in connection with the Contract(s).

4.1.13 The Contractor shall provide, maintain and remove on completion of the Works, fencing around the site installations including housing, camps, offices and laboratories, providing free access to the Employer, the Engineer, other Contractors and any other persons entitled to such access and provide appropriate security measures on such access roads.

4.2 Performance Security

Replace the text of Subclause 4.2.3 with the following:

The Contractor shall provide security for his proper performance of the Contract to the Employer within 28 days after the receipt of the Letter of Acceptance. The Performance Security shall be as stipulated in the Appendix to the Form of Bid. The Performance Security shall normally be in the currency or currencies requested for payment by the Contractor and in the same proportions as those requested for payment in the Contract. The Contractor shall notify the Engineer when providing the Performance Security to the Employer.

The Performance Security shall be a bank guarantee which shall be issued either:

(a) By a bank located in Kenya or a foreign bank through a correspondent established and reputable bank located in Kenya or;

Add the following sub-clause;

4.2.8 The performance security of a joint venture shall be in the name of the joint venture.

4.3 Contractor's Representative

Replace the first sentence of the second paragraph of Subclause 4.3.1 with:

Unless the Contractor's Representative is named in the Contract, the Contractor shall, within seven (7) days of receipt of the Engineer's Order to Commence the Works, submit to the Engineer for consent the name and particulars of the person the Contractor proposes to appoint as Contractor's Representative and the anticipated date of his arrival on Site. The submission shall be in writing together with all relevant documentation.

Add the following Subclause 4.3.5:

The Contractor's agent or representative on the Site shall be an Engineer registered by the Engineer's Board of Kenya in accordance with the Laws of Kenya cap. 530 or have equivalent status approved by the Engineer and shall be able to read, write and speak English fluently.

4.4 Subcontractors

Add after the first sentence:

No single subcontract shall be subcontracted more than 10 percent of the Contract Price, nor shall the sum of all subcontracts exceed 25 percent of the Contract price. No one subcontractor may be awarded subcontracts to a total value greater than 10 percent of the Contract Price. All subcontracts greater than 2 percent of the Contract Price are to have the prior consent of the Engineer.

Add the following:

The Engineer should be satisfied whether:

(a) The circumstances brought out warrant such subcontracting; and
(b) The subcontractors so proposed for the Work possess the necessary experience, qualifications and equipment for the job proposed to be entrusted to them in proportion to the quantum of work to be subcontracted.

If the Contractor proposes payments to be made directly to that subcontractor(s), this should be subject to specific authorization by the Contractor so that such consent does not relieve him from any liability or obligations under the contract.

4.7 Setting Out

Delete the second paragraph of sub-clause 4.7.1 entirely and replace with:

The Contractor shall be responsible for:
(a) the accurate setting-out of the Works in relation to original points, lines and levels of reference given by the Engineer in writing,
(b) the correctness, subject as above mentioned, of the position, levels, dimensions and alignment of all parts of the Works, and
(c) the provision of all necessary instruments, appliances and labour in connection with the foregoing responsibilities, and
(d) The checking of all the setting-out of the proposed works relative to existing ground features, to be undertaken prior to the commencement of fabrication of structural steelworks for superstructures. This preparation is to include providing the facility for the Engineer to undertake a timely check on this setting-out and alerting the Engineer to any likely problems foreseen.

The Contractor shall give to the Engineer not less than 48 hours of notice of his intention to set out or give levels and layout for any part of the works so that timely assignment can be made for checking the same or issuing instructions. He shall indicate therein by which date the information, if any, is required by him.

4.8 Safety Provisions

Add Subclauses 4.8 (f) to (w) and the subsequent text as follows:
The following are included at the end of bullet (e):

(f) provide health and safety training of Contractor's Personnel as appropriate and maintain training records;
(g) actively engage the Contractor's Personnel in promoting understanding, and methods for, implementation of health and safety requirements, as well as in providing information to Contractor's Personnel, and provision of personal protective equipment without expense to the Contractor's Personnel;
(h) put in place workplace processes for Contractor's Personnel to report work situations that they believe are not safe or healthy, and to remove themselves from a work situation which they have reasonable justification to believe presents an imminent and serious danger to their life or health;
(i) Contractor's Personnel who remove themselves from such work situations shall not be required to return to work until necessary remedial action to correct the situation has been taken. Contractor's Personnel shall not be retaliated against or otherwise subject to reprisal or negative

action for such reporting or removal;

(j) subject to Sub-Clause 4.6, collaborate with the entities and Personnel under paragraph (a), (b) and (c) of Sub- Clause 4.6, in applying the health and safety requirements. This is without prejudice to the responsibility of the relevant entities for the health and safety of their own personnel; and

(k) establish and implement a system for regular (not less than six-monthly) review of health and safety performance and the working environment.

(l) The Contractor shall take all necessary safety measures to avoid the occurrence of incidents and injuries to any third party, associated with the use of, if any, Contractor's Equipment on public roads or other public infrastructure.

(m) The Contractor shall monitor road safety incidents and accidents to identify negative safety issues, and establish and implement necessary measures to resolve them.

(n) Notwithstanding the Contractor's obligation under Subclauses 4.8 (a), (b) and (c) of the Conditions of Contract, the Contractor shall carry out, without limitation, the following measures with a view to reducing or eliminating adverse environmental effects by the site Works:

(i) All quarries, borrow pits, diversions and detours shall be filled and landscaped, as far as practical, to their original condition after extraction of construction material.

(ii) Soil erosion and sedimentation due to the surface runoff or water from culverts or other drainage structures should be avoided by putting in place proper erosion control measures.

(iii) Long traffic diversion roads shall be avoided so as to minimise the effect of dust on the surrounding environment. In any case, all diversions shall be kept damp to reduce dust.

(iv) Haulage routes shall be kept as short as possible and watered as necessary.

(v) Spillage of oil, fuel, and lubricants shall be avoided. If spilt, they shall be collected and disposed of in such a way that there do not adversely affect the natural environment.

(vi) Rock blasting near settlement areas shall be properly coordinated with the relevant officers of the Kenya government in an attempt to minimise levels of noise pollution and community interference.

(o) The formulation and enforcement of an adequate safety programme shall be the obligation of the Contractor with respect to all the works under this Contract, regardless of whether performed by the Contractor or his Subcontractors. The Contractor shall, within 14 days after commencement of the Works, meet the Engineer to present and discuss his plan for the establishment of such safety measures as may be necessary to provide against accidents, unsafe acts, and so forth.

Within 28 days after commencement of the Works, the Contractor shall submit a written safety, security and environmental protection programme to the Engineer covering the overall works and based on the laws and regulations of Kenya. In addition, he shall prepare special safety programmes for blasting and handling of explosives as may be stipulated in the Specifications.

(p) The Contractor shall take all due precautions to avoid soil and water contamination by spillage of oil, grease, fuel and paint in the equipment yard, workshop or the site of works. Lubricants should be recycled.

(q) The Contractor shall install pollution control device in his asphalt plant.

(r) The Contractor shall implement re-plantation and grading of steep slopes in quarries and borrow pits to prevent disfiguration of landscape.

(s) The Contractor shall implement compensatory afforestation plan to counteract destruction of vegetation when required to do so by the Engineer. The Contractor shall pay proper attention to the aspect of borrow pit drainage to prevent formation of stagnant pools of water and incidence of mosquito vectors. All borrow pits will be provided with efficient drains which shall be connected to the natural outfalls.

(t) Notwithstanding implementation of any other provision contained in the Conditions of Contract, the failure on the part of the Contractor or his staff in the cases listed bellow will be considered default on the part of the Contractor and will attract the terms of Subclause 63.1 for remedies.

- Poor sanitation and solid waste in the workers' camp
- Possible transmission of communicable diseases, including HIV/AIDS and COVID-19, between local people and the Contractor's workers
- Poaching by the Contractor's workers
- Illegal invasion of indigenous people by the Contractor's labour.

(u) All lights provided by the Contractor shall be screened so as not to interfere with any signal light on the railways or with any traffic or signal lights of any local or other authority.

(v) The Contractor shall be deemed to be in possession of, and ensure that the Contractor's personnel are fully aware of, relevant safety regulations.

(w) The Contractor shall ensure that all equipment, tools and other items used in accomplishing the Works, whether purchased, rented or otherwise provided by the Contractor are in safe, sound and good condition for performing the intending function.

Notwithstanding the terms of Clause 4.8 of the General Conditions of Contract, the Contractor shall throughout the contract (including the Defects liability Period):

(i) Conduct Information, Education and Consultation (IEC) campaign, at least every other month, addressed to all the Site staff and labour (including all Contractor's Employees, all Subcontractors and Consultant's employees, and all truck drivers and crew marketing deliveries to Site) and to the immediate local communities, concerning the dangers and impact of Sexually Transmitted Diseases (STD) in general and HIV/AIDS in particular;

(ii) Provide male or female condoms for all Site staff and labour as appropriate; and

(iii) Provide for STD and HIV/AIDS professional screening, diagnosis, counselling and full treatment (except that in the case of HIV/AIDS cases treatment shall be limited to referral to a dedicated national or regional HIV/AIDS programme)of all Site staff and labour.

4.10 Site Data

In the second paragraph, add the words "and the Contractor shall be deemed to have based his tender on all the aforementioned" after the words "affect the Tender or Works".

Add the following paragraph;

The Employer in no way guarantees completeness nor accuracy of the soil, materials, subsurface and hydrological information made available to the Contractor at the time of bidding or at any other time during the period of the Contract, and the Contractor shall be responsible for ascertaining for himself all information as aforesaid for the execution of Works and his bid shall be deemed to have been priced accordingly.

Add a new Subclause 4.10.1:

4.10.1 Access to Data

Data made available by the Employer in accordance with Subclause 4.10 shall be deemed to include data listed elsewhere in the Contract as open for inspection at the address stipulated in Special Conditions of Contract.

4.16 Transport of Goods

Add the following at the end of this subclause.

If it is found necessary for the Contractor to move one or more loads of heavy constructional plant and equipment, materials or pre-constructed units of work over roads, highways, bridges on which such oversized and overweight items are not normally allowed to be moved, the Contractor shall obtain prior permission from the concerned authorities. Payments for complying with the requirements, if any, for protection of or strengthening of the roads, highways or bridges shall be made by the Contractor and such expenses shall be deemed to be included in his Contract Price.

4.18 Protection of the Environment

Add the following after the first paragraph:

All works shall be carried out without unreasonable noise and disturbance. The Contractor shall indemnify and keep indemnified the Employer from and against any liability for damages on account of noise or other disturbances created while or in carrying out the work and from and against all claims, demands, proceedings, damages, costs, charges and expenses whatsoever in regard to or in relation to such liability.

Add the following after the second paragraph:

Subject, and without prejudice, to any other provision of the Contract and the law of the land and its obligations as applicable, the Contractor shall take all reasonable precautions in connection with:

(a) The rivers, streams, waterways, drains, water-course, lakes, reservoirs and the like to prevent:
- (i) Silting
- (ii) Erosion of their beds and banks, and
- (iii) Pollution of the water so as to affect adversely the quality or appearance thereof or cause injury or death to animal and plant life.

(b) The underground water resources including percolating water to prevent:
- (i) Any interference with the supply to or obstruction from such sources, and
- (ii) Pollution of the water which may adversely affect the quality thereof.

The Contractor shall further comply with any and all laws, rules and regulations of governmental agencies having jurisdiction which now exist or which may be promulgated during the course of the works contracted for herein, relating to the control, regulation and prevention of pollution. Not by way of limitation of the foregoing, but in furthermore thereof, the Contractor shall use the highest prevailing and approved standards of care and diligence to prevent and to take care of all waste, oil, water and other waste materials that may accumulate and be caused by the Contractor's operations and performance of this Contract so as to prevent pollution of any nature or kind resulting from the Works performed under this Contract.

4.22 Security of the Site

Add at the end of this Sub-clause:

"The Contractor shall; (i) conduct appropriate background checks on any personnel retained to provide security; (ii) train the security personnel adequately (or determine that they are properly trained) in the use of force (and where applicable, firearms), and appropriate conduct towards Contractor's Personnel, Employer's Personnel and affected communities; and (iii) require the security personnel to act within the applicable Laws and any requirements set out in the Specification.

The Contractor shall not permit any use of force by security personnel in providing security except when used for preventive and defensive purposes in proportion to the nature and extent of the threat.

In making security arrangements, the Contractor shall also comply with any additional requirements stated in the Specification."

STAFF AND LABOUR

6.1 Engagement of Staff and Labour

Delete "from sources within the Country." in the last sentence and replace with "who are Kenyan citizens."

The following paragraph is added at the end of the Sub- Clause:

"The Contractor shall provide the Contractor's Personnel information and documentation that are clear and understandable regarding their terms and conditions of employment. The information and documentation shall set out their rights under relevant labour Laws applicable to the Contractor's Personnel (which will include any applicable collective agreements), including their rights related to hours of work, wages, overtime, compensation and benefits, as well as those arising from any requirements in the Specification. The Contractor's Personnel shall be informed when any material changes to their terms or conditions of employment occur."

6.5 Working Hours

Delete Subclause 6.5 and substitute with the following:

If the Contractor requests for permission to work by day and night and if the Engineer shall grant such permission, the Contractor shall not be entitled to any additional payment for so doing.

All such work at night shall be carried out without unreasonable noise or other disturbance and the Contractor shall indemnify the Employer from and against any liability for damages on account of noise or other disturbance created while carrying out night work and from against all claims, demands, proceeding, costs, charges and expenses whatsoever in regard or in relation to such liability. In addition, the Contractor shall be required to provide, for any work carried out by night or recognised days of rest, adequate lighting and other facilities, so that the work is carried out safely and properly.

6.5.1 Overtime Hours

Working hours shall be observed by the Contractor as stipulated in the Labour Laws of Kenya. However, when deemed necessary to expedite the Works, overtime, night time or holiday working may be allowed by the Engineer in accordance with the provisions of Subclause 8.6. The Contractor, in these cases, shall pay all costs of the Engineer and his staff for such overtime, night time or holiday working at site as stipulated under Subclause 8.6 of the General Conditions of Contract.

Add Sub-Clause 6.7.4

6.7.4 In the event of any outbreak of illness of an epidemic nature, the Contractor shall comply with and carry out such regulations, orders, and requirements as may be made by the Government or the local medical or sanitary authorities for the purpose of dealing with and overcoming the same.

6.9 Contractor's Personnel

At the end of sub-clause 6.9.2 add "approved by the Engineer at the Contractor's own expense".

6.21 Prohibition on Harmful Child Labour

Delete Subclause 6.21 and replace with the following:

The Contractor, including its Subcontractors, shall not employ or engage a child under the age of 18 years.

The Contractor, including its Subcontractors, shall not employ or engage a child below the age of

18 years in a manner that is likely to be hazardous, or to interfere with, the child's education, or to be harmful to the child's health or physical, mental, spiritual, moral, or social development.

Add Sub-clauses 6.25 to 6.30;

6.25 Contractor's Personnel Grievance Mechanism

The Contractor shall have a grievance mechanism for Contractor's Personnel, and where relevant the workers' organizations stated in Sub-Clause 6.24, to raise workplace concerns. The grievance mechanism shall be proportionate to the nature, scale, risks and impacts of the Contract. The mechanism shall address concerns promptly, using an understandable and transparent process that provides timely feedback to those concerned in a language they understand, without any retribution, and shall operate in an independent and objective manner.

The Contractor's Personnel shall be informed of the grievance mechanism at the time of engagement for the Contract, and the measures put in place to protect them against any reprisal for its use. Measures will be put in place to make the grievance mechanism easily accessible to all Contractor's Personnel.

The grievance mechanism shall not impede access to other judicial or administrative remedies that might be available, or substitute for grievance mechanisms provided through collective agreements.

The grievance mechanism may utilize existing grievance mechanisms, providing that they are properly designed and implemented, address concerns promptly, and are readily accessible to Contractor's Personnel. Existing grievance mechanisms may be supplemented as needed with Contract- specific arrangements.

6.26 Default in payment of Wages

In the event of default in payment of wages of any workmen employed on the Contract, and if a claim thereafter is filed in the office of the Engineer and satisfactory proof thereof is furnished, the Employer shall be notified forthwith and may, failing payment of such claim by the Contractor, arrange the payment out of monies at any time payable under the Contract and the amount so paid shall be deemed payment to the Contractor under the Contract.

6.27 Breach and Removal from List

Should the Contractor or any subcontractor be found to be in breach of any of the provisions of the contract, the Employer may recommend to the Government for his removal from the list of approved Contractors.

6.28 Observance by Subcontractors

The Contractor shall be responsible for the observance by his subcontractor of the foregoing provisions.

6.29 Maintenance of Records

The Contractor shall maintain such records and make such reports concerning safety, health and welfare of persons and damage to property as the Engineer may prescribe from time to time.

6.30 Reporting of Accidents

The Contractor shall report to the Engineer details of any accident as soon as possible after its occurrence. In the case of any fatality or serious accident, the Contractor shall, in addition, notify the Engineer immediately by the quickest available means. The Contractor shall also notify the relevant authority (ies) whenever such report is required by the law of Kenya.

PLANT, MATERIALS AND WORKMANSHIP

7.9 Quality of Materials, Equipment, Supplies, Plant, and Workmanship

Add the following paragraph at the end of this Clause.

The Contractor is encouraged, to the extent practicable and reasonable, to use materials, Contractor's Equipment, Plant, and supplies from sources within Kenya.

COMMENCEMENT, DELAYS AND SUSPENSION

8.1 Commencement of Works

The Sub- Clause 8.1.1 is replaced in its entirety with the following:

The Contractor shall commence the Works within 28 days after the receipt by him of a notice to this effect from the Engineer, which notice shall be issued within the time stated in the Special Conditions of Contract Part A after the date of the Letter of Acceptance. Thereafter, the Contractor shall proceed with the Works with due expedition and without delay.

For the purposes of this subclause, the Works shall be deemed to have commenced when all of the following conditions are satisfied:

(a) The approved competent and authorized agent or representative of the Contractor is resident in the project area and is giving his whole time to the superintendence of the Works.
(b) The provision by the Contractor of evidence that all insurances required by the Contract are in force.
(c) The Contractor has an established an office in the project area with postal address for receipt of correspondence.
(d) The principal items of constructional plant have been brought to Site and put to work in the execution of the permanent Works.

8.3 Programme

Delete Subclause 8.3.1 and replace with the following:

The time within which the Programme shall be submitted shall be twenty-eight (28) days. This detailed Programme shall be based upon the programme submitted by the Contractor as part of his bid and shall, in no material manner, deviate from the said programme.

The Contractor shall allow in his Programme for the following 10 public holidays per calendar year in Kenya upon which the Contractor shall not be permitted to work:

- New Year's Day (1st January)
- Good Friday
- Easter Monday
- Labour Day (1st May)
- Madaraka Day (1st June)
- Idd-Ul-Fitr
- Mashujaa Day (20th October)
- Jamhuri Day (12th December)
- Christmas Day (25th December)
- Utamaduni Day (26th December)

The Contractor should also allow per calendar year for a further two (2) unspecified public holidays which may be announced by the Government of Kenya with no prior notification, and upon which he shall not be permitted to work.

The Programme shall be submitted in two copies and one digital copy (*in MS Project format*) in the form of a Critical Path Method Network (CPM Network) showing the order of procedure and description of the construction methods and arrangements by which he proposes to carry out the Works. In addition, the aforesaid critical path programme should be supplemented by:

(i) A Gantt/time-bar chart detailing each construction activity, showing for each construction activity; the periods of construction activity planned; the percentage completion anticipated per month; the total estimated quantity of work; the average monthly production planned, and

(ii) A detailed work method statement in respect of each construction activity. It should also be supplemented by a time-bar chart of the same programme. The programme shall be coordinated with climatic, groundwater and other conditions to provide for the completion of the works in the order and by the time specified. The Programme shall be revised at quarterly intervals and should include a chart of the principal quantities of the forecast for execution monthly.

The detailed work method statement of each particular construction activity shall list by category/type and quantity the labour, skilled labour, supervisors, plant, equipment and materials to be employed on the particular construction activity; together with: the estimated average daily production anticipated, the estimated equipment availability and utilisation factor anticipated and a detailed step description of the way in which resources are to be utilised to achieve the required rate of construction/production.

The Contractor's attention is particularly drawn to the need to familiarise himself with customs procedures in connection with importation and to allow sufficient time in its programme for these to be completed.

During the execution of Works, the Contractor shall submit to the Engineer detailed particulars of any proposed amendments to the arrangements and methods submitted in accordance to the foregoing.

If details of the Contractor's proposals for Temporary Works are required by the Engineer for his own information the Contractor shall submit such detail within fourteen days of being requested to do so.

The various operations pertaining to the Works shall be carried out in such a progressive sequence so as to achieve a continuous and consecutive output of fully completed road works inclusive of bridge works and culverts within the time limits specified in the Contract.

The Contractor shall, wherever required by the Engineer, also provided in writing for information a detailed description of the arrangements and methods which the Contractor proposes to adopt for the execution of any particular part of the Works as directed by the Engineer.

Progress reporting by the Contractor should be supported on a monthly basis with an up-to-date analysis of the progress including a statement on items which are or are about to become critical to the Progress of Works, along with proposals on how the Contractor intends to address the situation.

The consent by the Engineer on any programme shall have no contractual significance other than that the Engineer would be satisfied if the work is carried out according to such programme, and that the Contractor undertakes to carry out the work in accordance with the programme, nor shall it limit the right of the Engineer to instruct the Contractor to vary the programme should circumstances make this necessary. The above shall not be taken to limit the right of the Contractor to claim for damage or extension of time to which he may be fairly entitled to in terms of the General Conditions of the Contract for delay or disruption of his activities.

Notwithstanding the General Conditions of Contract, the programme to be submitted for the execution of the Works shall, in addition to the programme of pure construction activities, include an alleviation programme for Site staff and labour in respect of Sexually Transmitted Disease (STD)

including HIV/AIDS. The STD and HIV/AIDS alleviation programme shall indicate when, how and what cost the Contractor plans to satisfy the requirements of Subclause 6.7.3 herein and the related Technical Specifications. For each component, the programme shall detail the resources to be provided or utilized and any related sub-contracting proposed. The programme shall also include provision of a detailed cost estimate with supporting documentation.

8.3.4 Revised Programme

Add the following to Sub-clause 8.3.4:

If, during the progress of the work the sequence of operations is altered, or if the Programme is deviated from in any other way, the Contractor shall, within two weeks after being notified by the Engineer, submit a revised Programme necessary to ensure completion of the Works or any part thereof within the Time for Completion, or any extended time granted pursuant to Sub-clause 8.2 and 8.4 of the General Conditions of Contract or so as to take into account any delays or advances or for other reasons considered necessary by the Engineer without prejudice to the Employer's right under Clause 2.5 of the General Conditions of Contract.

Any proposal to increase the tempo of work must be accompanied by positive steps to increase production by providing more labour and plant on Site, or by using the available labour and plant in a more efficient manner.

Should the Employer request and the Contractor undertake to finish the whole or part of the Works ahead of the time originally required by the Contract, payment for accelerating the work shall only be made if agreed to beforehand in writing and according to the terms of such agreement.

If the Programme is to be revised by reason of the Contractor falling behind his Programme, he shall produce a revised Programme showing the modifications to the original Programme to complete the Works within the time as defined in Sub-clause 8.2 of the General Conditions of Contract.

The Employer shall have the right to withhold payment at any time if the Contractor fails to submit the contractual construction programmes in accordance with Subclause 8.3 above or revise construction programmes due to his negligence, failure or omission.

PROCURING ENTITY'S TAKING OVER

10.2.4 Delete the Sub-clause and replace with the following;

There shall be no reduction in the amount of delay damages in the event that a part or a section of the Works within the Contract is certified as completed before the whole of the Works comprising that Contract.

No bonus for early completion of the Works shall be paid to the Contractor by the Employer.

The sum stated in the Special Conditions of Contract (Part A) as delay damages shall be increased by a sum equivalent to any amount payable by the Employer to the Contractor in respect of an increase in costs in such period that would not have been incurred by the Contractor if the Works had been completed by the due date for completion prescribed by Sub-clause 8.2.

DEFECTS LIABILITY

Add the following to Sub-clause 11.1:

(c) Any work ordered to be executed under this subclause shall be carried out at a time and in a manner as directed by the Engineer so as to interfere as little as possible with the operations of the Employer or of other contractors and no extension(s) of the Defects Notification Period will be allowed for the execution of this work.

At the expiry of the Defects Notification Period, no defect arising from the permanent works existing shall be acceptable for taking over. The Employer shall verify and satisfy themselves that all the outstanding works and defects arising out of the works have been attended to sufficiently. Works shall also be inspected at the End of Defects Notification Period.

MEASUREMENT AND EVALUATION

Delete Sub-clause 12.1.3 and replace with the following:

The Contractor shall prepare and submit to the Engineer all necessary field notes and other records taken and computations made for the purpose of quantity measurements, of which the forms shall be approved by the Engineer, for the monthly progress statement under Clause 14. The measurement of work quantities made by the Contractor shall be verified and certified by the Engineer based on the above mentioned documents.

The Contractor shall furnish all personnel, equipment and materials to make such surveys and computations as necessary to determine the quantities of work performed. Unless otherwise prescribed in the specifications or the drawings, all measurements for payment shall be made by the dimensions, lines and grades as shown on the drawings or by direct survey of which the methods shall be approved by the Engineer.

The documents submitted for measurement and payment shall become the property of the Employer and shall be used to the extent necessary to determine the monthly progress payment to be made to the Contractor under the Contract. Direct survey, if conducted, shall be subject to checking and verification by the Engineer and all errors in the said survey work and related computations as found during such checking shall be immediately corrected by the Contractor.

In case of any disagreement on an item of measurement, the Engineer's opinion will prevail during the assessment of the statement for monthly interim payments. Should the Contractor consider himself entitled to any form of claim with respect to the disagreement in measurement, the procedure for such is detailed under Clause 20 of the Conditions of Contract

Add the following to this subclause:

12.1.5 The quality and quantity of the Work included in the Contract Price shall be deemed to be that which is set out in the Contract Bill of Quantities. The Bill of Quantities, unless otherwise expressly stated therein, shall be deemed to have been prepared in accordance with the principles of the latest edition of the Civil Engineering Standard Method of Measurement.

Any error in description or in quantity or any omission of items from the Contract Bill of Quantities or Specifications shall not vitiate this Contract but shall be corrected and deemed to be a variation required by the Engineer. Subject to the foregoing, any error whether arithmetical or not in the computation of the Contract Price shall be deemed to have been accepted by the parties hereto.

The Contract Price shall not be adjusted or altered in any way whatsoever otherwise than in accordance with the express provisions of these conditions.

Add the following to the end of subclause 12.2 (a):

"…in accordance with the principles of the latest edition of the Civil Engineering Standard Method of Measurement. All measurements shall be given in metric (SI) units."

Delete Sub-clause 12.3.2 and replace with the following:

12.3.2 Any item of work included in the Bills of Quantities for which no rate or price was specified shall be considered as included in other rates and prices in the Bills of Quantities and will not be paid for separately.

Provided that if the nature or amount of any varied work relative to the nature or amount of the whole of the Works or to any part thereof, is such that, in the opinion of the Engineer, the rate or price contained in the Contract for any item of the Works is, by reason of such varied work, rendered inappropriate or inapplicable, then, after due consultation by the Engineer with the Employer and the Contractor, a suitable rate or price shall be agreed upon between the Engineer and the Contractor. In the event of disagreement, the Engineer shall fix such other rate or price as is, in his opinion, appropriate and shall notify the Contractor accordingly, with a copy to the Employer. Until such time as rates or prices are agreed or fixed, the Engineer shall determine provisional rates or prices to enable on-account payments to be included in certificates issued in accordance with Clause 14.

Provided also that no varied work instructed to be done by the Engineer pursuant to Clause 13 shall be valued unless, within 14 days of the date of such instruction and, other than in the case of omitted work, before the commencement of the varied work, notice shall have been given either:

(a) by the Contractor to the Engineer of his intention to claim extra payment or a varied rate or price, or
(b) by the Engineer to the Contractor of his intention to vary a rate or price.

Where the Contract provides for the payment of the Contract Price in more than one currency, the amount or proportion payable in each of the applicable currencies shall be specified when the rates or prices are agreed, fixed, or determined as stated above, it being understood that in specifying these amounts or proportions the Contractor and the Engineer (or, failing agreement, the Engineer) shall take into account the actual or expected currencies of cost (and the proportions thereof) of the inputs of the varied work without regard to the proportions of various currencies specified in the Appendix to Form of Bid for payment of the Contract Price.

VARIATIONS AND ADJUSTMENTS

Delete Sub-Clauses 13.2.2 (c) and 13.2.3 in their entirety.

Add the following to the end sub-clause13.6.3:

The prices bid by the Contractor shall include all taxes, duties, and other charges imposed outside Kenya on the production, manufacture, sale, and transport of the Contractor's Equipment, Plant, materials, and supplies to be used on or furnished under the Contract, and on the services performed under the Contract.

The prices bid by the Contractor shall include all customs duties, import duties, business taxes, and income and other taxes that may be levied in accordance with the laws and regulations, being on the date 28 days prior to the latest date for submission of bids, in Kenya, on the Contractor's Equipment, Plant, materials, and supplies (permanent, temporary and consumables) acquired for the purpose of the Contract and on the services performed under the Contract. Nothing in the Contract shall relieve the Contractor from his responsibility to pay any tax that may be levied in Kenya on profits made by him in respect of the Contract.

Add the following sub-clauses 13.6.4 and 13.8.9:

13.6.4 The Work so ordered shall immediately become part of the Works under the Contract. The Contractor shall, as soon as practicable after receiving the Daywork Order from the Engineer undertake the necessary steps for due execution of such Work. Prior to commencement of any work to be done on a Daywork basis, the Contractor shall give a notice to the Engineer stating the exact time of such commencement.

13.8.9 To the extent that full compensation for any rise or fall in costs to the Contractor is not covered by

the provisions of this or other Clauses in the Contract, the unit rates and prices included in the Contract shall be deemed to include amounts to cover the contingency of such other rise or fall of costs.

CONTRACT PRICE AND PAYMENT

14.1 The Contract Price

14.1.3 Replace this sub-clause with the following:

Notwithstanding the provisions of subparagraph (b), Contractor's Equipment, including essential spare parts therefore, imported by the Contractor for the sole purpose of executing the Contract shall be temporarily exempt from the payment of import duties and taxes upon initial importation, provided the Contractor shall post with the customs authorities at the port of entry an approved export bond or bank guarantee, valid until the Time for Completion plus six months, in an amount equal to the full import duties and taxes which would be payable on the assessed imported value of such Contractor's Equipment and spare parts, and callable in the event the Contractor's Equipment is not exported from the Country on completion of the Contract. A copy of the bond or bank guarantee endorsed by the customs authorities shall be provided by the Contractor to the Employer upon the importation of individual items of Contractor's Equipment and spare parts.

Upon export of individual items of Contractor's Equipment or spare parts, or upon the completion of the Contract, the Contractor shall prepare, for approval by the customs authorities, an assessment of the residual value of the Contractor's Equipment and spare part to be exported, based on the depreciation scale(s) and other criteria used by the customs authorities for such purposes under the provisions of the applicable Laws.

Import duties and taxes shall be due and payable to the customs authorities by the Contractor on (a) the difference between the initial imported value and the residual value of the Contractor's Equipment and spare parts to exported; and (b) on the initial imported value of the Contractor's Equipment and spare parts remaining in the Country after completion of the Contract. Upon payment of such dues within 28 days of being invoiced, the bond or bank guarantee shall be reduced or released accordingly; otherwise the security shall be called in the full amount remaining.

14.2 Advance Payment

14.2.1 The Sub-Clause 14.2.1 is replaced with:

Advance Payment **MAY** be granted up to a maximum of 20% (twenty percent) depending on the availability of funds. The Contractor should make arrangements to commence the Works without Advance Payment.

In the event that an Advance Payment is granted, the following shall apply:

(a) On signature of the Contract, the Contractor shall at his request, and without furnishing proof of expenditure, be entitled to an advance of upto maximum of 20% (twenty percent) of the original amount of the Contract Sum. The advance shall not be subject to retention money.

(b) No advance payment may be made before the Contractor has submitted proof of the establishment of deposit or of a directly liable guarantee satisfactory to the Employer in the amount of the advance payment. The guarantee shall be in the same currency as the advance.

(c) Amortization of the advance shall be effected by deductions from monthly interim payments.

(d) Amortization of the lump sum advance shall be made by deductions from the Interim payments and where applicable from the balance owing to the Contractor.

The amortization shall begin when the amount of the sums due under the Contract reaches 20% of the original amount of the Contract. It shall have been completed by the time 80% of this amount is reached.

The amount to be amortized by way of successive deductions shall be calculated by means of the formula:

$$R = \frac{A\ (X^1 - X^{11})}{80 - 20}$$

Where:

R = Amount to be amortized

A = Amount of the advance which has been granted

X^1 = Amount of proposed cumulative payments as a percentage of the original amount of the Contract. This figure will exceed 20% but not exceed 80%.

X11 = Amount of the previous cumulative payments as a percentage of the original amount of the Contract. This figure will be below 80% but not less than 20%.

With each amortization, the counterpart of the directly liable guarantee may be reduced accordingly.

14.2.4 This Sub-Clause is deleted

14.4 Schedule of Payments

14.4.2 The time limit within which a detailed cash flow estimate is to be submitted shall be twenty-eight (28) days.

In preparing the estimates, the Contractor shall make provision for Advance payment, repayment of advance, retention, payment for services provided by the Employer and timing implications of Clause 14.7 Payment.

A schedule of Payments for both local and foreign currency expected to be made to the Contractor by the Employer, shall be provided.

The cash flow estimate submitted with the bid shall be revised each time the construction Programme is submitted, and revised, under Subclauses 8.3 and 8.3.4 above.

14.5 Plant and Materials Intended for the Works

14.5.2.2.3 Delete and replace it with

Are those listed in the Appendix to Conditions of Contract for payment when delivered to site.

14.7.1 Replace all time limits in Sub-clause 14.7.1 (a) to (c) with 90 days.

SUSPENSION AND TERMINATION BY CONTRACTOR

Add the following to the end of the Sub-Clause 16.1.5 (b)

However, the costs due to idle time for plant, equipment and labour shall not be included in the said costs and shall be borne by the Contractor.

Add the following Subclauses 17.2.5 to 17.2.8:

17.2.5 Passage and Control of Traffic

The Contractor's attention is drawn to Specifications covering the Passage and Control of Traffic and in particular to the requirement for the submission of a detailed Programme for Passage of Traffic as required following the award of the Contract.
In case any operation connected with traffic which necessitates diversion, obstruction or closure of any road, railway or any other right of way, the approval of the Engineer or the Engineer's Representative and the concerned authorities shall be obtained well in advance by the Contractor.

17.2.6 Reinstatement and Compensation for Damage to Persons or Property

The Contractor shall reinstate all properties whether public or private which are damaged in consequence of the construction and maintenance of the Works to a condition at least equal to that prevailing before his first entry on them.
If in the opinion of the Engineer the Contractor shall have failed to take reasonable and prompt action to discharge his obligations in the matter of reinstatement, the Engineer will inform the Contractor in writing of his opinion, in which circumstances, the Employer reserves the right to employ others to do the necessary work of reinstatement and to deduct the cost thereof from any money due or to become due to the Contractor.

17.2.7 Protection of Existing Works and Services

The Contractor shall acquaint himself with the position of all existing services, such as sewers, surface water drains, cables for electricity, data and telephone, telephone and lighting poles, water mains, and the like before commencing any excavation or other works likely to affect the existing services.

The Contractor will be held liable for all damage to roads, irrigation ditches, mains pipes, electric cables, lines or services of any kind caused by him or his subcontractors in the execution of the Works. The Contractor must make good any damage without delay and, if necessary, carry out any further work ordered by the Engineer or Engineer's Representative, all at the Contractor's cost. Where work is to be carried out in the vicinity of overhead power lines, the Contractor shall ensure that all persons working in such areas are aware of the relatively large distance that high voltage electricity can "short" to earth when crane, or other large masses of steel, are in the vicinity of power lines. The Contractor's attention is drawn to appropriate standards which gives safe clearances for the various voltages.

The Contractor shall be held responsible for damage to existing works or services, and shall indemnify the Employer against any claims in this respect (including consequential damages). The Contractor shall be responsible for the reinstatement of the services, so affected, to the satisfaction of the Engineer.

In all cases where such works or services are exposed, they shall be properly shored, hung up or otherwise protected. Special care must be exercised in filling and compaction of the grounds under mains and cable. The exposed water meters, stopcock boxes and similar items shall be left uncovered.

As soon as any such existing works or services or structures are encountered on, over, under, in or through the Site during the performance of the Contract, the Contractor shall make a record of the location and description of such service or structure and shall send the same forthwith to the Engineer.

Installations adjacent to the Works shall be kept securely in place until the work is completed and shall then be made as safe and permanent as before.

Notwithstanding the foregoing requirements, and without reducing the Contractor's responsibility, the Contractor shall inform the Engineer immediately if any existing works or services are located, exposed or damaged.

17.2.8 Protection of Survey Beacons

The Contractor shall not remove, damage, alter or destroy in any way plot beacons. Should the Contractor consider that any beacons will be interfered with by the Work he shall notify the Engineer who, if he considers it necessary, will make arrangements for the removal and replacement of the beacons.

INSURANCE

18.1.6 Evidence of Terms of Insurance

Insert the words "as soon as practicable after the respective insurances have been taken out but in any case" before the words "prior to the start of Work at the Site"

Add the following Subclauses 18.1.13 to 18.1.15:

18.1.13 Insurance Notices

Each policy of insurance effected by the Contractor for the purpose of the Contract shall include a provision to the effect that the Insurer shall have a duty to give notice in writing to the Contractor and Employer of the date when a premium becomes payable not more than thirty (30) days after the giving of such notice.

18.1.14 Insurance in Kenya

The risks against which the Contractor is obliged to insure under the Contract shall be insured through established and reputable companies approved by the Employer and located in Kenya and any cover against risks which the Contractor may enjoy shall be insured in Kenya by an approved Kenyan Insurance Company in respect of the Contractor's obligations under the Contract.

18.1.15 Notification to Insurers

It shall be the responsibility of the Contractor to notify the insurers under any of the insurances referred or event which by the terms of such insurances are required to be so notified and the Contractor shall indemnify and keep indemnified the Employer against all losses, claims, demands, proceedings, costs, charges and expenses whatsoever arising out of or in consequence of any default by the Contractor in complying with the requirements of this subclause whether as a result of avoidance of such insurance or otherwise.

Add the following Sub-clauses 18.5 and 18.6:

18.5 Exclusions

There shall be no obligation for the insurances in Clause 18 to include loss or damage caused by the risks listed under Sub-clause 17.3 subparagraphs (a) to (e) in the General Conditions of Contract.

18.6 Insurance of Goods

The Contractor shall insure or cause to be insured all imported goods financed out of the proceeds of the Contract against marine and other hazards incidental to the acquisition, transportation and delivery thereof to the place of use or installation and where appropriate against all usual risks pertaining to the construction of the Works.

20.1 Contractor's Claims

20.1.1 Add the following at the end of this subclause:

The Contractor shall also state the references of the Contract Clauses and Subclauses on which he has based his claims.

20.1.5 Delete Sub-clause 20.1.5 and replace it with the following:

Within 42 days after receiving a claim or any further particulars supporting a previous claim, or within such other period as may be proposed by the Engineer and approved by the Contractor, the Engineer shall respond with approval, or with disapproval and detailed comments. He may also request any necessary further particulars but shall nevertheless give his response on the principles of the claim within the above defined time period.

20.5.2 Delete Sub-clause 20.5.2 and replace it with the following:

The Institution of Engineers of Kenya or the Chartered Institute of Arbitrator (Kenya) will be responsible for Appointment of Arbitrator under Contracts with local Contractors.

APPENDIX TO CONDITIONS OF CONTRACT

(Appendix to Form of Bid)

Conditions	GCC Clause	Data
Employer's Name and Address	1.1.2	Director General, Kenya Urban Roads Authority, Barabara Plaza, Block D, P.O. BOX 41727-00100, **NAIROBI** Tel. No.: +254 – 020 - 8013844/0717105233 dg@kura.go.ke
Time for Completion	8.2	8 Months
Engineer's Name and Address	1.1.2	Director (RA&CM), Kenya Urban Roads Authority, Barabara Plaza, Block D, P.O. Box 41727-00100, **NAIROBI** Info@kura.go.ke
Electronic transmission	1.3.1 (a)	Not Applicable
Language	1.4	All key staff of the Contractor shall be fluent in English language and will communicate only in the language of the Contract in the process of execution of the Contract. Any foreign staff employed by the Contractor shall be capable of communicating effectively in English. Any billboards or notices by the Contractor must be written in the language of the Contract; and that use of any other language will be with strict prior approval by the Engineer in which case appropriate English translations must be included.
Time for the Parties entering into a Contract Agreement	1.6	Within the bid validity period
Time for access to the Site	2.1	No later than 28 days after the Order to commence. No later than the Commencement Date.
Engineer's Authority to make Variations	3.1.2 (b) (ii)	25% of the Contract Price
Performance Security	4.2.2	The performance security shall be in the form of an unconditional bank guarantee in the amount of **Five (5) percent** of the Contract Price less Provisional Sums and Contingencies
Time for Provision of Performance Security	4.2.3	The Performance Security shall be delivered within 14 days after receiving the Letter of Award.
Contractor's Representative's Name	4.3	……(*To be provided*)

Conditions	GCC Clause	Data
Working Hours	6.5	Normal working hours shall be 8:00 a.m. to 5:00 p.m. on weekdays, including lunch break from 1.00 p.m. to 2.00 p.m. and 8:00 a.m. to 1:00 pm on Saturdays, with Sunday being set aside as a day of rest.
Key Personnel Names	6.9	……(*insert the name of each Key Personnel agreed by the Procuring Entity prior to Contract signature*)
Commencement of Works	8.1	Not later than 28 (Twenty Eight) days after Notice of Order to Commence.
Programme of Works	8.3	Not later than 28 (Twenty Eight) days after issuance of Order to Commence
Delay Damages	8.7	0.05 % of the Contract Price per day
Limit of Delay Damages	8.7.1	5 % percent of the Contract Price.
Defects Notification Period	11.1	3 Months
Rate for Purchases from Nominated Sub-contractors	13.5.1 (b) (iii)	Not Applicable
Approximate Weightings and Indices for Price Adjustment Formula	13.8	Not applicable
Adjustments to Changes in Cost	13.8.3	Not applicable
Sources of Indices	13.8.4	Not applicable
Advance Payment	14.2.1	Not applicable
Repayment of Advance Payment	14.2.4 (a)	Not applicable
Retention Money	14.3.2 (c)	5 % percent of Interim Payment Certificates
Limit of Retention	14.3.2 (c)	5 % of the Contract Price less Provisional Sums and Contingencies
Cash Flow Estimate	14.4.2	To be submitted not later than 14 days after issuance of Order to Commence
Plant and Materials	14.5.2 (b)	Not Applicable
	14.5.2 (c)	Plant and Materials for payment when delivered to the Site (Materials on Site) include; ➢ Crushed stone and aggregates ➢ Bitumen and bitumen products ➢ Cement ➢ Culvert and drainage pipes ➢ Structural steel and reinforcing steel ➢ Paving blocks ➢ Gabion and mattress mesh boxes ➢ Geotextiles, bitumen reinforcement grid, embankment slope protection components ➢ Gravel ➢ etc *(add or delete as appropriate)*
Minimum Amount of Interim Payment Certificates	14.6	Kshs. 8,000,000.00 (*in figures*) Kenya Shillings Eight Million *(in words)*
Time within which payment	14.7.1	28 days

Conditions	GCC Clause	Data
to be made after Interim Payment Certificate signed by Engineer	(b)	
Time within which payment to be made after Final Payment Certificate signed by the Engineer	14.7.1 (c)	28 days
Publishing source of commercial interest rates for financial charges in case of delayed payment	14.8	a) Interest to be paid shall be based on the rates of the Central Bank of Kenya (Base Rate) 28 days prior to the opening of the bids b) Delayed payment shall be paid based on a simple interest computation.
Currencies of Payment	14.15	Kenya Shillings (KES)
Periods for submission of insurance:	18.1	Prior to commencement of the Works, the Contractor and in any case, not later than 30 days after signing of the Contract Agreement
Maximum number of deductibles for insurance of the Procuring Entity's risks	18.2.4 (d)	Unlimited number of occurrences
Insurance	18.3	Contractor's all Risk Insurance KSHS. ……. (Equivalent to Value of Works in the Contract) Third Party Liability Insurance **1% of contract sum** Workers Compensation WIBA (…… No. of staff to be insured)
The place of arbitration	20.7.2	The place for arbitration shall be within the jurisdictional boundaries of the Republic of Kenya
Contract Documents	1.4	The language of the contract is English
	1.4	The law in force is that of the Republic of Kenya
Access to Data	4.10	Data made available by the Employer under Sub clause 4.10 is open for inspection at the offices of Kenya Urban Roads Authority
Number of Copies of monthly Statement and statements of Completion and Final Statement	14.3	1 copy
Appointer of Arbitrator	20.6	Institution of Engineers of Kenya or Chartered Institute of Arbitrators, Kenya.
		Email: Info@kura.go.ke Web:www.kura.go.ke

Signature …….. Date …….

SECTION IX - CONTRACT FORMS

Table of Forms

FORM No. 1 - NOTIFICATION OF INTENTION TO AWARD

FORM No. 2 - NOTIFICATION OF AWARD - LETTER OF ACCEPTANCE

FORM No. 3 - CONTRACT AGREEMENT

FORM No. 4 - PERFORMANCE SECURITY [Option 1 - Unconditional Demand Bank Guarantee]

FORM No. 5 - PERFORMANCE SECURITY [Option 2 - Performance Bond]

FORM No. 6 - ADVANCE PAYMENT SECURITY

FORM No. 7 - RETENTION MONEY SECURITY

FORM No. 8 - CONTRACTOR PREFORMANCE EVALUATION

FORM NO. I ~ NOTIFICATION OF INTENTION TO AWARD

[*This Notification of Intention to Award shall be sent to each Tenderer that submitted a Tender.*] [*Send this Notification to the Tenderer's Authorized Representative named in the Tender Information Form*]

FORMAT

For the attention of Tenderer's Authorized Representative

Name:……..*[insert Authorized Representative's name]* Address: *[insert Authorized Representative's Address]* Telephones: *[insert Authorized Representative's telephone/fax numbers]* Email Address: *[insert Authorized Representative's email address]*

*[**IMPORTANT:** insert the date that this Notification is transmitted to Tenderers. The Notification must be sent to all Tenderers simultaneously. This means on the same date and as close to the same time as possible.]*

Date of Transmission: This Notification is sent by: [*email*] on [*date*] (local time)

Procuring Entity: *[insert the name of the Procuring Entity]* Contract title: *[insert the name of the contract]*

Country: Kenya, County_____(*if the Procuring Entity is from a County*)

This Notification of Intention to Award (Notification) notifies you of our decision to award the above contract. The transmission of this Notification begins the Standstill Period. During the Standstill Period, you may:

a) Request a debriefing in relation the evaluation of your Tender, and/or

b) Submit a Procurement-related Complaint in relation to the decision to award the contract.

1. **The successful Tenderer**

Name: [*insert name of successful Tenderer*] Address: [*insert address of the successful Tenderer*]

Contract price: [*insert contract price of the successful Tender*]

2. **Other Tenderers: insert names of all Tenderers that submitted a Tender. If the Tender's price was** *evaluated include the evaluated price as well as the Tender price as read out.]*

S/No.	*Name of Tenderer*	*Tender Price*	*Evaluated Tender Price*	*Comments if any*
1				
2				
3				
4				
5				
Etc				

3. How to request a debriefing

DEADLINE: The deadline to request a debriefing expires at midnight on [*insert date*] (local time).

You may request a debriefing in relation to the results of the evaluation of your Tender. If you decide to request a debriefing your written request must be made within three (3) Business Days of receipt of this Notification of Intention to Award. Provide the contract name, reference number, name of the Tenderer, contact details; and address the request for debriefing as follows:

Attention: [*insert full name of person, if applicable*] **Title/position**: *[insert title/position*]

Procuring Entity: [*insert name of Procuring Entity*] **Email address**: [*insert email address*]

If your request for a debriefing is received within the 3 Business Days deadline, we will provide the debriefing within five (5) Business Days of receipt of your request. If we are unable to provide the debriefing within this period, the Standstill Period shall be extended by five (5) Business Days after the date that the debriefing is provided. If this happens, we will notify you and confirm the date that the extended Standstill Period will end. The debriefing may be in writing, by phone, video conference call or in person. We shall promptly advise you in writing how the debriefing will take place and confirm the date and time.

If the deadline to request a debriefing has expired, you may still request a debriefing. In this case, we will provide the debriefing as soon as practicable, and normally no later than fifteen (15) Business Days from the date of publication of the Contract Award Notice.

1. How to make a complaint?

Period: Procurement-related Complaint challenging the decision to award shall be submitted by midnight, [*insert date*] (local time).

Provide the contract name, reference number, name of the Tenderer, contact details; and address the Procurement- related Complaint as follows:

Attention: [*insert full name of person, if applicable*] Title/position: [*insert title/position*] Procuring Entity: [*insert name of Procuring Entity*] Email address: [*insert email address*]

At this point in the procurement process, you may submit a Procurement-related Complaint challenging the decision to award the contract. You do not need to have requested, or received, a debriefing before making this complaint. Your complaint must be submitted within the Standstill Period and received by us before the Standstill Period ends.

In summary, there are four essential requirements:

a) You must be an 'interested party'. In this case, that means a Tenderer who submitted a Tender in this tendering process, and is the recipient of a Notification of Intention to Award.

b) The complaint can only challenge the decision to award the contract.

c) You must submit the complaint within the period stated above.

d) You must include, in your complaint, all of the information necessary to support your case.

e) The application must be accompanied by the fees set out in the Procurement Regulations, which shall not be refundable (information available from the Public Procurement Authority at www.ppoa.go.ke.

2. **Standstill Period**

f) **DEADLINE:** The Standstill Period is due to end at midnight on [*insert date*] (local time).

i) The Standstill Period lasts ten (14) Days after the date of transmission of this Notification of Intention to Award.

(ii) The Standstill Period may be extended as stated in Section 4 above.

If you have any questions regarding this Notification please do not

hesitate to contact us. On behalf of the Procuring Entity:

Name_____ Title and Position____

_____

Signature_____ Date__

FORM NO. 2 ~ NOTIFICATION OF AWARD

Letter of Acceptance

[letter head paper of the Procuring

Entity] [date]

FORMAT

To: *[name and address of the Contractor]*

This is to notify you that your Tender dated *[date]* for execution of the *[name of the Contract and identification number, as given in the **SCC**]* for the Accepted Contract Amount *[amount in numbers and words] [name of currency]*, as corrected and modified in accordance with the Instructions to Tenderers, is hereby accepted by our Agency.

You are requested to furnish the Performance Security within 30 days in accordance with the Conditions of Contract, using, for that purpose, one of the Performance Security Forms included in Section X, Contract Forms, of the tender document.

We attach a copy of the Contact for your

Authorized Signature:

Name and Title of

Signatory: Name of

Agency:

Attachment: Contract Agreement

FORM NO. 3 – CONTRACT AGREEMENT

THIS AGREEMENT made the _____ day of _____, _____, between _____of _____ (hereinafter "the Procuring Entity"), of the one part, and of (herein after "the Contractor"), of the other part:

WHEREAS the Procuring Entity desires that the Worksknownas _____shoul d be executed by the Contractor, and has accepted a Tender by the Contractor for the execution and completion of these Works and the remedying of any defects therein, The Procuring Entity and the Contractor agree as follows:

1. In this Agreement words and expressions shall have the same meanings as are respectively assigned to them in the Contract documents referred to.

2. The following documents shall be deemed to form and be read and construed as part of this Agreement. This Agreement shall prevail over all other Contract documents.

   a) The Letter of Acceptance
   b) The Letter of Tender
   c) The addenda Nos_____(if any)
   d) The Particular Conditions
   e) The General Conditions;
   f) The Specification
   g) The Drawings*;* and
   h) The completed Schedules and any other documents forming part of the contract.

3. In consideration of the payments to be made by the Procuring Entity to the Contractor as specified in this Agreement, the Contractor hereby covenants with the Procuring Entity to execute the Works and to remedy defects therein in conformity in all respects with the provisions of the Contract.

4. The Procuring Entity hereby covenants to pay the Contractor in consideration of the execution and completion of the Works and the remedying of defects therein, the Contract Price or such other sum as may become payable under the provisions of the Contract at the times and in the manner prescribed by the Contract.

IN WITNESS whereof the parties hereto have caused this Agreement to be executed in accordance with the laws of Kenya on the day, month and year specified above.

Signedby

_____(for the Procuring Entity)

Signedby

_____(for the Contractor)

FORM NO. 4 - PERFORMANCE SECURITY
– (Unconditional Demand Bank Guarantee)

[Guarantor letterhead or SWIFT identifier code]

Beneficiary:_____*[insert name and Address of*

Procuring Entity/**Date:**_____*[Insert date of issue]*

PERFORMANCE GUARANTEE No.:__

Guarantor: *[Insert name and address of place of issue, unless indicated in the letterhead]*

1. We have been informed that_____(herein after called "the Applicant") has entered into Contract No._____*dated*_____with the Beneficiary, for the execution of _____ (herein after called "the Contract").

2. Further more, we understand that, according to the conditions of the Contract, a performance guarantee is required.

3. At the request of the Applicant, we as Guarantor, here by irrevocably undertake to pay the Beneficiary any sum or sums not exceeding in total an amount of__( ),[1] such sum being payable in the types and proportions of currencies in which the Contract Price is payable, upon receipt by us of the Beneficiary's complying demand supported by the Beneficiary's statement, whether in the demand itself or in a separate signed document accompanying or identifying the demand, stating that the Applicant is in breach of its obligation(s) under the Contract, without the Beneficiary needing to prove or to show grounds for your demand or the sum specified therein.

4. This guarantee shall expire, no later than the …..... Day of …..... 2…[2], and any demand for payment under it must be received by us at this office indicated above on or before that date.

5. The Guarantor agrees to a one-time extension of this guarantee for a period not to exceed *[six months] [one year],* in response to the Beneficiary's written request for such extension, such request to be presented to the Guarantor before the expiry of the guarantee."

_____

_____

[Name of Authorized Official, signature(s) and seals/stamps]

Note: Allitalicized text (including footnotes) is for use in preparing this form and shall be deleted from the final product.

[1]The Guarantor shall insert an amount representing the percentage of the Accepted Contract Amount specified in the Letter of Acceptance, less provisional sums, if any, and denominated either in the currency(cies) of the Contract or a freely convertible currency acceptable to the Beneficiary.

[2]Insert the date twenty-eight days after the expected completion date as described in GC Clause 11.9. The Procuring Entity should note that in the event of an extension of this date for completion of the Contract, the Procuring Entity would need to request an extension of this guarantee from the Guarantor. Such request must be in writing and must be made prior to the expiration date established in the guarantee. In preparing this guarantee, the Procuring Entity might consider adding the following text to the form, at the end of the pen ultimate paragraph: "The Guarantor agrees to a one-time extension of this guarantee for a period not to exceed [six months] [one year], in response to the Beneficiary's written request for such extension, such request to be presented to the Guarantor before the expiry of the guarantee."

FORM No. 5 ~ PERFORMANCE SECURITY OPTION 2– (Performance Bond)

*[**Note:** Procuring Entities are advised to use Performance Security–Unconditional Demand Bank Guarantee instead of Performance Bond due to difficulties involved in calling Bond holder to action]*

[Guarantor letterhead or SWIFT identifier code]

Beneficiary:_____*[insert name and Address of*

Procuring Entity/**Date:**_____*[Insert date of issue]*

PERFORMANCE BOND No.:_____

Guarantor: [*Insert name and address of place of issue, unless indicated in the letter head]*

1. By this Bond_____as Principal (hereinafter called "the Contractor") and_____] as Surety (hereinafter called "the Surety"), are held and firmly bound unto_____] as Obligee (hereinafter called "the Procuring Entity") in theamountof_____for the payment of which sum well and truly to be made in the types and proportions of currencies in which the Contract Price is payable, the Contractor and the Surety bind themselves, their heirs, executors, administrators, successors and assigns, jointly ands everally, firmly by these presents.

2 WHEREAS the Contractor has entered into a written Agreement with the Procuring Entity dated the day of, 20_____, for_____in accordance with the documents, plans, specifications, and amendments thereto, which to the extent here in provided for, are by reference made part hereof and are herein after referred to as the Contract.

3 NOW, THEREFORE, the Condition of this Obligation is such that, if the Contractor shall promptly and faithfully perform the said Contract (including any amendments thereto), then this obligation shall be null and void; otherwise, it shall remain in full force and effect. Whenever the Contractor shall be, and declared by the Procuring Entity to be, in default under the Contract, the Procuring Entity having performed the Procuring Entity's obligations there under, the Surety may promptly remedy the default, or shall promptly:

1) Complete the Contract in accordance with its terms and conditions; or

2) Obtain a tender or tenders from qualified tenderers for submission to the Procuring Entity for completing the Contract in accordance with its terms and conditions, and upon determination by the Procuring Entity and the Surety of the lowest responsive Tenderers, arrange for a Contract between such Tenderer, and Procuring Entity and make available as work progresses (even though there should be a default or a succession of defaults under the Contract or Contracts of completion arranged under this paragraph) sufficient funds to pay the cost of completion less the Balance of the Contract Price; but not exceeding, including other costs and damages for which the Surety may be liable hereunder, the amount set forth in the first paragraph hereof. The term "Balance of the Contract Price," as used in this paragraph, shall mean the total amount payable by Procuring Entity to Contractor under the Contract, less the amount properly paid by Procuring Entity to Contractor; or

3) Pay the Procuring Entity the amount required by Procuring Entity to complete the Contract in accordance with its terms and conditions upto a total not exceeding the amount of this Bond.

4 The Surety shall not be liable for a greater sum than the specified penalty of this Bond.

5 Any suit under this Bond must be instituted before the expiration of one year from the date of the issuing of the Taking-Over Certificate. No right of action shall accrue on this Bond to or for the use of any person or corporation other than the Procuring Entity named here in or the heirs, executors, administrators, successors, and assigns of the Procuring Entity.

6 In testimony where of, the Contractor has here unto set his hand and affixed his seal, and the Surety has caused these presents to be sealed with his corporate seal duly attested by the signature of his legal representative, this day _____of_____20_____.

SIGNED ON on behalf of By in

the capacity of In the presence of

SIGNED ON on behalf of By in

the capacity of In the presence of

FORM NO. 6 - ADVANCE PAYMENT SECURITY

[Demand Bank Guarantee] *[Guarantor letterhead or SWIFT*

identifier code] [Guarantor letterhead o rSWIFT identifier code]

Beneficiary:_____*[Insert name and Address of* Procuring Entity/ **Date:**_____*[Insert date of issue]*

ADVANCE PAYMENT GUARANTEE No.: *[Insert guarantee reference number]*

Guarantor: [*Insert name and address of place of issue, unless indicated in the letterhead]*

1. We have been informed that_____(herein after called "the Applicant") has entered into Contract No._____*dated*_____with the Beneficiary, for the execution of (herein after called" the Contract").

2. Furthermore, we understand that, according to the conditions of the Contract, an advance payment in the sum _____( ) is to be made against an advance payment guarantee.

3. At the request of the Applicant, we as Guarantor, hereby irrevocably undertake to pay the Beneficiary any sum or sums not exceeding in total an amount of___( )[1] upon receipt by us of the Beneficiary's complying demand supported by the Beneficiary's statement, whether in the demand itself or in a separate signed document accompanying or identifying the demand, stating either that the Applicant:
   a) Has used the advance payment for purposes other than the costs of mobilization in respect of th eWorks; or
   b) has failed to repay the advance payment in accordance with the Contract conditions, specifying the amount which the Applicant has failed to repay.

4. A demand under this guarantee may be presented as from the presentation to the Guarantor of a certificate from the Beneficiary's bank stating that the advance payment referred to above has been credited to the Applicant on its account number_____at_____

5. The maximum amount of this guarantee shall be progressively reduced by the amount of the advance payment repaid by the Applicant as specified in copies of interim statements or payment certificates which shall be presented to us. This guarantee shall expire, at the latest, upon our receipt of a copy of the interim payment certificate indicating that ninety (90) percent of the Accepted Contract Amount, less provisional sums, has been certified for payment, or on the day of_____,2_____,[2] whichever is earlier. Consequently, any demand for payment under this guarantee must be received by us at this office on or before that date.

6. The Guarantor agrees to a one-time extension of this guarantee for a period not to exceed *[six months] [one year],* in response to the Beneficiary's written request for such extension, such request to be presented to the Guarantor before the expiry of the guarantee.

[Name of Authorized Official, signature(s) and seals/stamps]

Note: All italicized text (including footnotes) is for use in preparing this form and shall be deleted from the final product.

---

[1] *The Guarantor shall insert an amount representing the amount of the advance payment and denominated either in the currency(ies) of the advance payment as specified in the Contract, or in a freely convertible currency acceptable to the Procuring Entity.*

[2] *Insert the expected expiration date of the Time for Completion. The Procuring Entity should note that*

in the event of an extension of the time for completion of the Contract, the Procuring Entity would need to request an extension of this guarantee from the Guarantor. Such request must be in writing and must be made prior to the expiration date established in the guarantee. In preparing this guarantee, the Procuring Entity might consider adding the following text to the form, at the end of the penultimate paragraph: "The Guarantor agrees to a one-time extension of this guarantee for a period not to exceed [six months] [one year], in response to the Beneficiary's written request for such extension, such request to be presented to the Guarantor before the expiry of the guarantee."

FORM NO. 7 - RETENTION MONEY SECURITY
[Demand Bank Guarantee]
[Guarantor letterhead]

Beneficiary: _____*[Insert name and Address of*
Procuring Entity/**Date:** _____*[Insert date of issue]*
ADVANCE PAYMENT GUARANTEE No.:_____
[Insert guarantee reference number]

Guarantor: *[Insert name and address of place of issue, unless indicated in the letterhead]*

1. We have been informed that_____*[insert name of Contractor, which in the case of a joint venture shall be the name of the joint venture]* (herein afte rcalled" the Contractor") has entered into Contract No. _____*[insert reference number of the contract]* dated_____with the Beneficiary, for the execution of_____*[insert name of contract and brief description of* Works*]* (herein after called" the Contract").

2. Furthermore, we understand that, according to the conditions of the Contract, the Beneficiary retains moneys upto the limit set forth in the Contract ("the Retention Money"), and that when the Taking-Over Certificate has been issued under the Contract and the first half of the Retention Money has been certified for payment, and payment of *[*insert the second half of the Retention Money] is to be made against a Retention Money guarantee.

3. At the request of the Contractor, we, as Guarantor, hereby irrevocably undertake to pay the Beneficiary any sum or sums not exceeding in total an amount of *[insert amount in figures]* (*[insert amount in words_____])*[1] upon receipt by us of the Beneficiary's complying demand supported by the Beneficiary's statement, whether in the demand itself or in a separate signed document accompanying or identifying the demand, stating that the Contractor is in breach of its obligation(s) under the Contract, without your needing to prove or show grounds for your demand or the sum specified therein.

4. A demand under this guarantee may be presented as from the presentation to the Guarantor of a certificate from the Beneficiary's bank stating that the second half of the Retention Money as referred to above has been credited to the Contractor on its account number_____at_____ *[insert name and address of Applicant's bank].*

5. This guarantee shall expire no later than the……. Day of……..…, 2…[2], and any demand for payment under it must be received by us at the office indicated above on or before that date.

6. The Guarantor agrees to a one-time extension of this guarantee for a period not to exceed *[six months] [one year],* in response to the Beneficiary's written request for such extension, such request to be presented to the Guarantor before the expiry of the guarantee.

_____
[Name of Authorized Official, signature(s) and seals/stamps]

Note: All italicized text (including foot notes) is for use in preparing this form and shall be deleted from the final product.

Tender No. KURA/XXX/XXX/XXXX/FY

[1] *The Guarantor shall insert an amount representing the amount of the second half of the Retention Money.*

[2] *Insert a date that is twenty-eight days after the expiry of retention period after the actual completion date of the contract. The Procuring Entity should note that in the event of an extension of this date for completion of the Contract, the Procuring Entity would need to request an extension of this guarantee from the Guarantor. Such request must be in writing and must be made prior to the expiration date established in the guarantee.*

FORM NO. 8 – CONTRACTOR PERFORMANCE EVALUATION

KENYA URBAN ROADS AUTHORITY

Transforming Urban Mobility

ROAD & BRIDGE WORKS MONTHLY SUPERVISION CHECKLIST

Project Title		Contract Commencement Date	
		Contract Duration (Months)	
		Number of Elapsed Contract Months	
Contractor		Resident Engineer	
Date of Checking		Site Agent	

This form is used by Resident Engineer to verify monthly performance for road and bridge works contract evaluation.

Scope			Requirement / Check point	Compliance with Requirement	Remark
1	Execution system in general	1.1	Works Execution Programme (including its revised version if any) is submitted within the time specified in contract document		
		1.2	Works Execution Programme properly reflects the applicable specifications and site conditions		
		1.3	Adopted execution procedures are in accordance with Works Execution Programme		
2	Equipment holding	2.1	All equipment's are fully mobilized in accordance with Works Execution Programme		
		2.2	Equipment inspected, maintained and operated by trained personnel		
		2.3	Safety guards and emergency stops are in place for equipment		
		2.4	Equipment inspection checklist and service records available		
3	Contractor's in-house staff	3.1	Contractors Key Superintending Staff are Qualified as per Contract Requirements (Site Agent/Roads Manager, Foremen, Surveyor, Environment Health & Safety Officer etc.) and are mobilized as planned		
		3.2	Qualified technical staff of Contractor are properly assigned as specified in Works Execution Programme		

Project Title		Contract Commencement Date	
		Contract Duration (Months)	
		Number of Elapsed Contract Months	
Contractor		Resident Engineer	
Date of Checking		Site Agent	

This form is used by Resident Engineer to verify monthly performance for road and bridge works contract evaluation.

Scope		Requirement / Check point		Compliance with Requirement	Remark
		3.3	Contractor's in-house key staff understand work process and schedule properly		
		3.4	Contractor's in-house key staff give technical guidance and direction to workers and operators properly and timely		
		3.5	Communications with agency in writing is proper and timely		
4	Personnel employment	4.1	Workers and operators are deployed in accordance with Works Execution Programme		
		4.2	Wage payment is properly made on time and in accordance with labour laws		
5	Site base facilities	5.1	Office and stockyard are prepared in accordance with Works Execution Programme		
		5.2	Site is well maintained during the work execution and cleared on completion		
		5.3	Material stored on site properly managed during the work execution		
6	Quality and quantity management	6.1	Project Design conforms with established standards as per the Design Manuals (Road, Structural and Stormwater Drainage Designs)		
		6.2	Quality Control Plan including Works Methodology are provided and conform with established Contract Management Guidelines		
		6.3	Inspection and Test Plans and the respective Checklist for major work items have been prepared in accordance with project specifications		
		6.4	Project Materials and Laboratory/Design Mix Acceptance Tests Results have been submitted and are in conformance with specifications		
		6.5	Routine compliance/process control tests for works are properly sampled based on the project specifications; and the results are in conformance with the specifications		
		6.7	Identified works non-conformities are rectified/made good by the Contractor within specified timeframe (Non-Conformance Control)		

Project Title		Contract Commencement Date	
		Contract Duration (Months)	
		Number of Elapsed Contract Months	
Contractor		Resident Engineer	
Date of Checking		Site Agent	

This form is used by Resident Engineer to verify monthly performance for road and bridge works contract evaluation.

Scope		Requirement / Check point		Compliance with Requirement	Remark
		6.8	Works inspection approvals and results of material testing, structural examination and measurements are properly filed		
		6.6	Works measurements for payment purpose; and survey measurements for pavement and structural works setting out and construction control, are properly and routinely conducted based on specifications; and are in conformance with the specifications		
		6.9	Earthworks and pavement record charts including concrete structures charts are regularly updated.		
		6.10	Project final completion report is prepared as per contract management guidelines		
7	Work scheduling	7.1	Understanding critical path and its implication on work scheduling are proper		
		7.2	Actual proceedings are periodically compared to the planned schedule described in Works Execution Programme		
		7.3	Changes caused by site conditions are properly handled to keep Works on schedule		
		7.4	All works are completed within the contract term or within the approved extended term		
8	Work safety management	8.1	Occupier has in place Occupational Safety and Health (OSH) policy which is satisfactorily communicated to all stakeholders at the workplace / OSHA Abstract clearly displayed on site		
		8.2	Implementation of OSH policy at the workplace is satisfactory		
		8.3	Emergency preparedness and response plan in place		
		8.4	Approved site-specific safety and health management plan is available on site		
		8.5	Site-specific safety and health induction is conducted for all workers and visitors at the workplace		
		8.6	Safety officer deployed on site and conducts weekly safety inspections		
		8.7	Periodic safety audits undertaken by safety consultant or external body		
		8.8	No accident occurs to workers, operators, or third parties at the workplace		
		8.9	All workers and visitors provided with appropriate personal protective equipment and training provided for safe use of the equipment		
		8.10	There are proper accident prevention efforts for third parties		
		8.11	Site safety devices, warning signs and directional signs are properly installed and managed		

Project Title		Contract Commencement Date	
		Contract Duration (Months)	
		Number of Elapsed Contract Months	
Contractor		Resident Engineer	
Date of Checking		Site Agent	

This form is used by Resident Engineer to verify monthly performance for road and bridge works contract evaluation.

Scope		Requirement / Check point		Compliance with Requirement	Remark
		8.12	Traffic management plan in place and implemented as planned (Traffic diversion or deviations provided where necessary, traffic devices well installed and managed, provision of well-trained traffic marshals etc.)		
		8.13	Temporary facilities (scaffolding, hoarding, barricading, safety nets etc.) are constantly checked		
		8.14	Toolbox/work safety talks are held at the job site daily/weekly and documented		
		8.15	Safe systems of work [e.g. Job Safety Analysis (JSA), Risk Assessment (RA), and Permit to Work (PTW)] are subscribed to on site		
		8.16	Updated register of injuries / accidents / near miss incidents at the workplace is maintained		
9	Environmental and social management	9.1	Project has an Environmental and Social Management Plan		
		9.2	Project has obtained an Environmental Impact Assessment License		
		9.3	Noise and vibration mitigation efforts are conducted		
		9.4	Dust and emissions mitigation efforts are conducted		
		9.5	Waste material from site is properly disposed		
		9.6	Damage to existing roads, works and services is avoided or are repaired when it occurs		
		9.7	HIV Component under the project is implemented		
		9.8	Stakeholders Engagement/Dispute Resolution (on matters related to property access, beaconing, outfalls etc) are undertaken		
		9.9	Tree planting and/or landscaping based on bill of quantities is undertaken		
		9.10	Risks to biodiversity loss are addressed/mitigated		
		9.11	Risks to climate hazards such as floods are addressed/mitigated		
		9.12	Economic risks such as livelihood loss are addressed/mitigated		

Project Title		Contract Commencement Date	
		Contract Duration (Months)	
		Number of Elapsed Contract Months	
Contractor		Resident Engineer	
Date of Checking		Site Agent	

This form is used by Resident Engineer to verify monthly performance for road and bridge works contract evaluation.

Scope		Requirement / Check point		Compliance with Requirement	Remark
		9.13	Transportation by vehicles is properly done with no overloading, and neither material falling, leakage, nor spillage		
10	Statutory & Regulatory Compliance	10.1	Contractors All Risk Insurance policy provided (for Third Party Liability, Contract Works & Equipment)		
		10.2	Work Injury Benefits Insurance Policy Provided (Work Injury Benefits Act of 2007: Revised 2012)		
		10.3	Is the project compliant with the Occupational Safety and Health Act (OSHA), 2007. [Registration of Workplace; Safety & Health Committee Establishment; Health, Safety & Welfare Provisions (Provision of sufficient, suitable and separate sanitary conveniences for persons of each sex, wholesome drinking water, washing facilities, accommodation for clothing, facilities for sitting, first aid box, protective clothing and appliances, etc.); General Register, OSHA, 2007 Abstract display; etc.]		
		10.4	Is the project compliant with the Environmental Management and Co-ordination Act Cap 387 and its Regulations. (EIA License, Environmental and Social Management Plan Implementation and Monitoring, Display of EIA License Number on the Project Publicity Board, etc.)		
		10.5	Statutory deductions made on time (PAYE, NSSF, SHIF, Housing Levy etc.)		
11	Project Risk Management	11.1	Project risk assessment is done before commencement of works		
		11.2	Risk mitigation measures are identified and implemented during the contract period.		
		11.3	Project risk register is maintained and updated during the contract period.		

Compliance Filling Example: ✓ = Check point is satisfactory X = Check point is unsatisfactory N/A = Check point is not applicable

Contractor Performance Evaluation Tally Sheet

Project Title	
Road Agency	
Contractor	
Date of Commencement	
Expected date of Completion	
Number of elapsed months in the end of last year	

	Date	Name	Signature
Resident Engineer			
Site Agent			

1. This tally sheet is for Resident Engineer to evaluate performance of contractor by scoring at the end of contract. Use this form for evaluation in every month during contract period.
2. Fill "1" for "Pass" or "0" for "Fail" in column for each item and month according to monthly evaluation form. Fill "-" in column for non applicable.

	Scope	Evaluation													(a)	(b)	(c)	(d)	(f)
		No. of month with "Pass=1" in past years	Year (…....)												No. of month with "Pass=1" in total	(a)/ Total month (%)	Weight for each item	Score for each item (b)*(c)	Penalty*1
			Jan	Feb	Mar	Apr	May	Jun	Jul	Aug	Sep	Oct	Nov	Dec					
1	Execution system in general														**0**		**10%**	**0**	
2	Equipment holding														**0**		**14%**	**0**	
3	Contractor's in-house staff														**0**		**12%**	**0**	
4	Personnel employment														**0**		**14%**	**0**	
5	Site base facilities														**0**		**10%**	**0**	
6	Quality and quantity management														**0**		**10%**	**0**	
7	Work scheduling														**0**		**10%**	**0**	
8	Work safety management														**0**		**10%**	**0**	
9	Environment and social management														**0**		**10%**	**0**	
10	Statutory compliance													**0**	**0**	**0**			
	*1: Penalty of -20 point is given for statutory non-compliance in equal or more than one month																	**0**	**0**
																	Total score	**0**	